Kawasaki KZ750

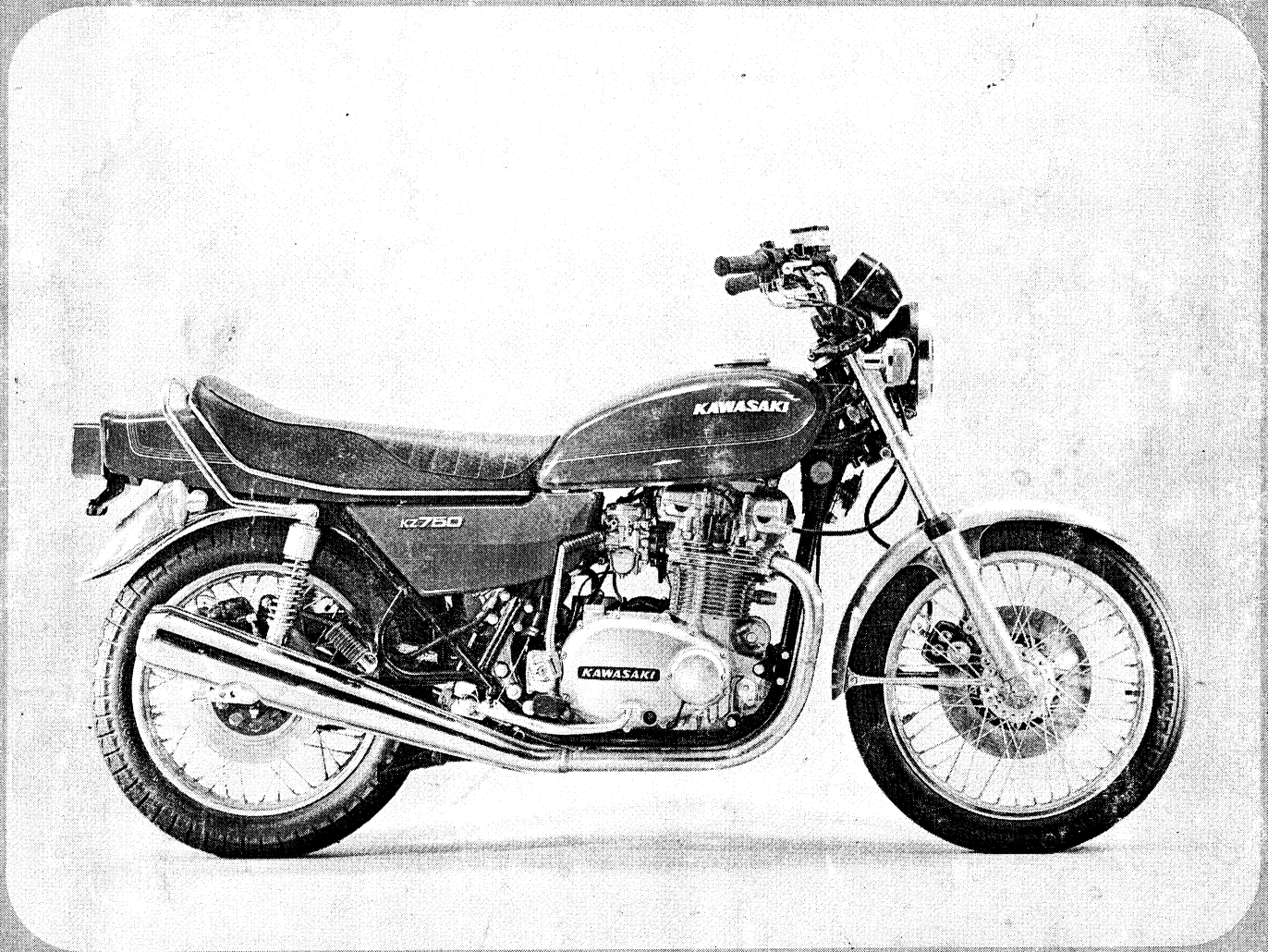

Motorcycle Service Manual

Decimal Equivalents

INCH					MM INCH
1/64				.015625	
	1/32			.03125	1mm= .03937 inch
3/64				.046875	
		1/16		.0625	
5/64				.078125	2mm= .07874 inch
	3/32			.09375	
7/64				.109375	3mm= .11811 inch
			1/8	.125	
9/64				.140625	
	5/32			.15625	4mm= .15748 inch
11/64				.171875	
		3/16		.1875	5mm= .19685 inch
13/64				.203125	
	7/32			.21875	
15/64				.234375	6mm= .23622 inch
			1/4	.25	
17/64				.265625	7mm= .27559 inch
	9/32			.28125	
19/64				.296875	
		5/16		.3125	8mm= .31496 inch
21/64				.328125	
	11/32			.34375	9mm= .35433 inch
23/64				.359375	
			3/8	.375	
25/64				.390625	10mm= .39370 inch
	13/32			.40625	
27/64				.421875	11mm= .43307 inch
		7/16		.4375	
29/64				.453125	
	15/32			.46875	12mm= .47244 inch
31/64				.484375	
			1/2	.5	13mm= .51181 inch

INCH					MM INCH
33/64				.515625	
	17/32			.53125	
35/64				.546875	14mm= .55118 inch
		9/16		.5625	
37/64				.578125	15mm= .59055 inch
	19/32			.59375	
39/64				.609375	
			5/8	.625	16mm= .62992 inch
41/64				.640625	
	21/32			.65625	17mm= .66929 inch
43/64				.671875	
		11/16		.6875	
45/64				.703125	18mm= .70866 inch
	23/32			.71875	
47/64				.734375	19mm= .74803 inch
			3/4	.75	
49/64				.765625	
	25/32			.78125	20mm= .78740 inch
51/64				.796875	
		13/16		.8125	21mm= .82677 inch
53/64				.828125	
	27/32			.84375	
55/64				.859375	22mm= .86614 inch
			7/8	.875	
57/64				.890625	23mm= .90551 inch
	29/32			.90625	
59/64				.921875	
		15/16		.9375	24mm= .94488 inch
61/64				.953125	
	31/32			.96875	25mm= .98425 inch
63/64				.984375	
			1	1.	

Unit Conversion Table

cc	x	.0610	=	cu in
cc	x	.02816	=	oz (imp)
cc	x	.03381	=	oz (US)
cu in	x	16.39	=	cc
ft-lbs	x	12	=	in lbs
ft-lbs	x	.1383	=	kg-m
gal (imp)	x	4.546	=	litres
gal (imp)	x	1.201	=	gal (US)
gal (US)	x	3.7853	=	liters
gal (US)	x	.8326	=	gal (Imp)
grams	x	.03527	=	oz
in	x	25.40	=	mm
in lbs	x	.0833	=	ft-lbs
in lbs	x	.0115	=	kg-m
kg	x	2.2046	=	lbs
kg	x	35.274	=	oz
kg-m	x	7.233	=	ft-lbs
kg-m	x	86.796	=	in-lbs
kg/cm^2	x	14.22	=	lbs/in^2
km	x	.6214	=	mile
lb	x	.4536	=	kg
lb/in^2	x	.0703	=	kg/cm^2
litre	x	28.16	=	oz (imp)
litre	x	33.81	=	oz (US)
litre	x	.8799	=	qt (imp)
litre	x	1.0567	=	qt (US)
metre	x	3.281	=	ft
mile	x	1.6093	=	km
mm	x	.03937	=	in
oz (imp)	x	35.51	=	cc
oz (US)	x	29.57	=	cc
oz (weight)	x	28.35	=	grams
qt (imp)	x	1.1365	=	litre
qt (imp)	x	1.201	=	qt (US)
qt (US)	x	.9463	=	litre
qt (US)	x	.8326	=	qt (imp)
kg/cm^2	x	98.07	=	kPa
lbs/in^2	x	6.896	=	kPa
kPa	x	.1450	=	lbs/in^2

$°C \rightarrow °F: \frac{9\,(°C + 40)}{5} - 40 = °F$

$°F \rightarrow °C: \frac{5\,(°F + 40)}{9} - 40 = °C$

List of Abbreviations

ABDC	after bottom dead center
ATDC	after top dead center
BBDC	before bottom dead center
BDC	bottom dead center
BTDC	before top dead center
cc	cubic centimeters
cu in	cubic inches
ft	foot, feet
ft-lbs	foot-pounds
gal	gallon, gallons
hp	horsepower
in	inch, inches
in-lb	inch-pounds
kg	kilogram, kilograms
kg/cm^2	kilograms per square centimeter
kg-m	kilogram meters
km	kilometer
kph	kilometers per hour
lb, lbs	pound, pounds
lbs/in^2	pounds per square inch
ltr	liter, litre
m	meter, meters
mi	mile, miles
mm	millimeters
mph	miles per hour
oz	ounce, ounces
psi	pounds per square inch
qt	quart, quarts
rpm	revolutions per minute
sec	second, seconds
SS	standing start
TDC	top dead center
"	inch, inches
r/min	revolutions per minute
ℓ	liter, litre
kPa	kilo-Pascals

Kawasaki

KZ750



Motorcycle Service Manual

© Kawasaki Heavy Industries, Ltd. 1975, 1977, 1978, 1980

Revised 5 : Aug. 30, 1989 (M)



This warning may apply to any of the following components or any assembly containing one or more of these components:—

Brake Shoes or Pads
Clutch Friction Material
Gaskets
Insulators

SAFETY INSTRUCTIONS

- Operate if possible out of doors or in a well ventilated place.
- Preferably use hand tools or low speed tools equipped, if necessary, with an appropriate dust extraction facility. If high speed tools are used, they should always be so equipped.
- If possible, dampen before cutting or drilling.
- Dampen dust and place it in properly closed receptacle and dispose of it safely.

Kawasaki Heavy Industries, Ltd. accepts no liability for any inaccuracies or omissions in this publication, although every possible care has been taken to make it as complete and accurate as possible. All procedures and specifications subject to change without prior notice, and may not apply to every country.

Foreword

This manual is designed primarily for use by motorcycle mechanics in a properly equipped shop, although it contains enough detail and basic information to make it useful to the motorcycle user who desires to carry out his own basic maintenance and repair work. Since a certain basic knowledge of mechanics, the proper use of tools, and workshop procedures must be understood in order to carry out maintenance and repair satisfactorily; the adjustments, maintenance, and repair should be carried out only by qualified mechanics whenever the owner has insufficient experience, or has doubts as to his ability to do the work, so that the motorcycle can be operated safely.

In order to perform the work efficiently and to avoid costly mistakes, the mechanic should read the text, thoroughly familiarizing himself with the procedures before starting work, and then do the work carefully in a clean area. Whenever special tools or equipment is specified, makeshift tools or equipment should not be used. Precision measurements can only be made if the proper instruments are used, and the use of substitute tools may adversely affect safe operation of the motorcycle.

Whenever you see the symbols shown below, heed their instructions! Always follow safe operating and maintenance practices.

WARNING **This warning symbol identifies special instructions or procedures which, if not correctly followed, could result in personal injury, or loss of life.**

CAUTION **This caution symbol identifies special instructions or procedures which, if not strictly observed, could result in damage to, or destruction of equipment.**

"**NOTE**" indicates points of particular interest for more efficient and convenient operation.

This manual is divided into the following sections:

(1) Adjustment

The adjustment section gives the procedure for all adjustments which may become necessary periodically and which do not involve major disassmbly.

(2) Disassembly

This section shows the best method for the removal, disassembly, assembly, and installation which are necessary for maintenance and repair. Since assembly and installation are usually the reverse of disassembly and removal, assembly and installation are not explained in detail in some cases. Instead, assembly notes and installation notes are provided to explain special points.

(3) Maintenance and Theory of Operation

The procedures for inspection and repair are described in detail in this section. An explanation on the structure and functioning of each of the major parts and assemblies is given to enable the mechanic to better understand what he is doing.

(4) Appendix

The appendix in the back of this manual contains miscellaneous information, including a special tool list, a torque table, a table for periodic maintenance, and a troubleshooting guide.

Since this Service Manual is based on units of the KZ750 presently on the market, there may be minor discrepancies between some vehicles and the illustrations and text in this manual. Major changes and additions pertaining to later year units will be explained in a supplement following the appendix or by a new edition.

Places marked with an asterisk (*) indicate where the latest revisions or additions have been made in the text over the previous edition.

Table of Contents

FOREWARD 1
MODEL IDENTIFICATION 4
SPECIFICATIONS 5
ENGINE PERFORMANCE CURVES ... 7
RUNNING PERFORMANCE CURVES.. 8
ADJUSTMENT 9
- SPARK PLUGS 9
- IGNITION TIMING 9
- CAMSHAFT CHAIN 11
- VALVE CLEARANCE 12
- THROTTLE CABLES 13
- CARBURETORS 14
- CLUTCH 16
- REAR SHOCK ABSORBERS 17
- DRIVE CHAIN 17
- BRAKES 18
- BRAKE LIGHT SWITCH 19
- STEERING 19
- WHEEL BALANCE 20
- HEADLIGHT 21
- HORN 21

DISASSEMBLY 22
- INTRODUCTION TO DISASSEMBLY 22
- ENGINE 23
- AIR CLEANER ELEMENT 30
- OIL FILTER 31
- MUFFLER 32
- FUEL TANK 32
- CARBURETORS 33
- CAMSHAFT 37
- CAMSHAFT SPROCKET 40
- CYLINDER HEAD 40
- VALVES AND VALVE GUIDES 41
- CYLINDER BLOCK 43
- PISTON AND PISTON RINGS 44
- DYNAMO FILED COIL AND ARMATURE 46
- DYNAMO ROTOR (FLYWHEEL) AND STARTER MOTOR CLUTCH 48
- STARTER MOTOR CHAIN AND SPROCKETS 49
- STARTER MOTOR 49
- IGNITION COIL 51
- CONTACT BREAKER 51
- CAPACITOR 52
- TIMING ADVANCER 52
- CLUTCH HUB AND CLUTCH PLATES ... 53
- CLUTCH RELEASE 55
- ENGINE SPROCKET 55
- NEUTRAL INDICATOR SWITCH 56
- EXTERNAL SHIFT MECHANISM 57
- KICKSTARTER SPRING 58
- BREATHER COVER 59
- ENGINE OIL PUMP 60
- TRANSMISSION 61
- KICKSTARTER 73
- OIL PRESSURE RELIEF VALVE 74
- BALANCER MECHANISM 75
- CRANKSHAFT, CAMSHAFT CHAIN, AND PRIMARY CHAIN 77
- CONNECTING ROD 78
- CAMSHAFT CHAIN GUIDE (Front) 79
- CAMSHAFT CHAIN GUIDE (Rear) 79
- CAMSHAFT CHAIN GUIDE (Top) 79

- FRONT WHEEL 79
- FRONT DISC BRAKE 82
- REAR WHEEL 87
- REAR DISC BRAKE 90
- TIRE AND TUBE 93
- RIM 94
- SPOKE 94
- CLUTCH CABLE 94
- THROTTLE CABLES 95
- HANDLEBAR 96
- SPEEDOMETER CABLE 97
- TACHOMETER CABLE 97
- HEADLIGHT UNIT 98
- SPEEDOMETER, TACHOMETER, AND ILLUMINATOR LIGHTS 98
- INDICATOR LIGHTS 99
- IGNITION SWITCH 100
- TURN SIGNAL LIGHT 100
- TURN SIGNAL ASSEMBLY 100
- TAIL/BRAKE LIGHT 102
- OIL PRESSURE INDICATOR SWITCH 102
- FRONT BRAKE LIGHT SWITCH 102
- FRONT FORK 102
- STEERING STEM 105
- STEERING STEM BEARING 107
- REAR SHOCK ABSORBERS 108
- SWING ARM 109
- DRIVE CHAIN 111

MAINTENANCE & THEORY OF OPERATION 112
- AIR CLEANER 112
- CARBURETORS 112
- CAMSHAFTS 119
- CAMSHAFT CHAIN, GUIDES, TENSIONER 121

CYLINDER HEAD, VALVES 122
CYLINDER BLOCK AND PISTONS 127
CRANKSHAFT AND CONNECTING RODS 131
BALANCER MECHANISM 134
CLUTCH 136
PRIMARY CHAIN 139
TRANSMISSION 140
KICKSTARTER 144
ENGINE LUBRICATION 145
ENGINE OIL SEALS 149

FUEL TANK 150
WHEELS 150
TIRES 150
RIM AND SPOKES 153
AXLE 154
GREASE SEALS AND WHEEL BEARINGS 154
REAR WHEEL COUPLING 155
DRIVE CHAIN 155
SPROCKETS 156
DISC BRAKES 157
STEERING STEM 163
FRONT FORK 164
REAR SHOCK ABSORBERS 168
SWING ARM 168
MUFFLERS 170

DYNAMO ('76 and '77 models) 170
RECTIFIER ('76 and '77 models) 173
REGULATOR ('76 and '77 models) 174
BATTERY 176
IGNITION SYSTEM 178
TIMING ADVANCER 180
SPARK PLUGS 181
STARTER MOTOR CIRCUIT 182
STARTER MOTOR CLUTCH, CHAIN 185
IGNITION SWITCH 186
HEADLIGHT CIRCUIT 186
BRAKE LIGHT CIRCUIT 188
TURN SIGNALS 190
HORN 191
SPEEDOMETER, TACHOMETER 191
APPENDIX 192
SPECIAL TOOLS 192
PERIODIC MAINTENANCE 195
VALVE ADJUSTMENT CHART 199
VALVE INSTALLED HEIGHT PROCEDURE TABLE 200
TORQUE AND LOCKING AGENT 201
TROUBLESHOOTING GUIDE 205
FLOW CHART FOR DISASSEMBLY 209
WIRING DIAGRAMS 213
SUPPLEMENT* 215
DISASSEMBLY 215
FRONT DISC BRAKE 215
Pad Removal and Installation ('78 and later models) 215
Master Cylinder Disassembly and Assembly ('78 and later models) . . . 216
TRANSMISSION 217
Output Shaft ('78 and later models) . . . 217
MAINTENANCE 218
ENGINE LUBRICATION 218
Relief Valve (ball type) 218
DISC BRAKES ('78 and later models) . . . 218
FRONT FORK ('78 and later models) . . . 218
CHARGING SYSTEM ('78 and later models) 219
Dynamo 220
Regulator/Rectifier 221
IGNITION SWITCH ('78 and later model) 222
WIRING DIAGRAMS 223
INDEX 229

*The first issue of this service manual was based on the 1976 KZ750. Since the first issue, certain design changes have been made which require a new disassembly or maintenance procedure. These new procedures which can not be included in each section are explained in this supplement.

Model Identification





Specifications

Dimension		
Overall length	US	2,150 mm
	European	2,180 mm
Overall width	US	855 mm
	European	815 mm
Overall height	US	1,195 mm
	European	1,115 mm
Wheelbase		1,450 mm
Road clearance	US	145 mm
	European	155 mm
Dry weight		218 kg
Fuel tank capacity		14.5 ℓ
Performance		
Climbing ability		26°
Braking distance		12 m @50kph
Minimum turning radius		2.5 m
Engine		
Type		DOHC 2 cylinder, 4 stroke, air-cooled
Bore and stroke		78.0 x 78.0 mm
Displacement		745 cc
Compression ratio		8.5:1
Maximum horsepower		55 HP @7,000 rpm, Ⓖ 51 HP @7,000 rpm
Maximum torque		6.0 kg-m @3,000 rpm, Ⓖ 6.1 kg-m @3,000 rpm
Valve timing		
Inlet	Open	30° BTDC
	Close	50° ABDC
	Duration	260°
Exhaust	Open	70° BBDC
	Close	30° ATDC
	Duration	280°
Carburetors		Mikuni BS 38 x 2
Lubrication system		Forced lubrication (wet sump)
Engine oil		SE class SAE 10W40, 10W50, 20W40, or 20W50
Engine oil capacity		4.0 ℓ
Starting system		Electric and kick
Ignition system		Battery and coil
Ignition timing		From 5° BTDC @1,000 rpm to 30° BTDC @3,750 rpm
Spark plugs		NGK B6ES or ND W20ES-U
Transmission		
Type		5-speed, constant mesh, return shift
Clutch		Wet, multi-disc
Gear ratio: 1st		2.33 (35/15)
2nd		1.63 (31/19)
3rd		1.27 (28/22)
4th		1.04 (26/25)
5th		0.89 (24/27)

Primary reduction ratio		2.48 (57/23)
Final reduction ratio		2.38 (38/16)
Overall drive ratio		5.23 (@Top gear)
Electrical Equipment		
Generator (Dynamo)		Nippon Denso 037000-1330
Regulator		Shindengen SH221-12
Ignition coil		Nippon Denso AJPG36
Battery		Nippon Denchi GM14Z-3A (12V 14AH)
Starter		Mitsuba SM-224
Headlight type	US	Sealed Beam
	European	Semi-sealed
Headlight	US	12V 50/35W
	European	12V 45/40W
Tail/Brake light	US	12V 8/27W (3/32 CP)
	European	12V 5/21W
Speedometer light		12V 3.4W
Tachometer light		12V 3.4W
Neutral indicator light		12V 3.4W
High beam indicator light		12V 3.4W
Turn signal/Running position lights	US	12V 23/8W
Turn signal lights	US	12V 23W
	European	12V 21W
Turn signal indicator light		12V 3.4W
Oil pressure indicator light		12V 3.4W
Brake light failure indicator light		12V 3.4W
Horn		12V 2.5A
City light	European	12V 4W
Frame		
Type		Tubular, double cradle
Steering angle		39° to either side
Castor		26.5°
Trail		105 mm
Tire size	Front	3.25H-19 4PR
	Rear	4.00H-18 4PR
Suspension	Front	Telescopic Fork
	Rear	Swing arm
Suspension stroke	Front	140 mm
	Rear	80 mm
Front fork oil capacity (each fork)		176 ~ 184 cc
Front fork oil type		SAE 15W
Brakes		
Type	Front and Rear	Disc brake
Effective disc diameter	Front	250 mm
	Rear	230 mm

Ⓖ: German model
Specifications subject to change without notice, and may not apply to every country.

Engine Performance Curves

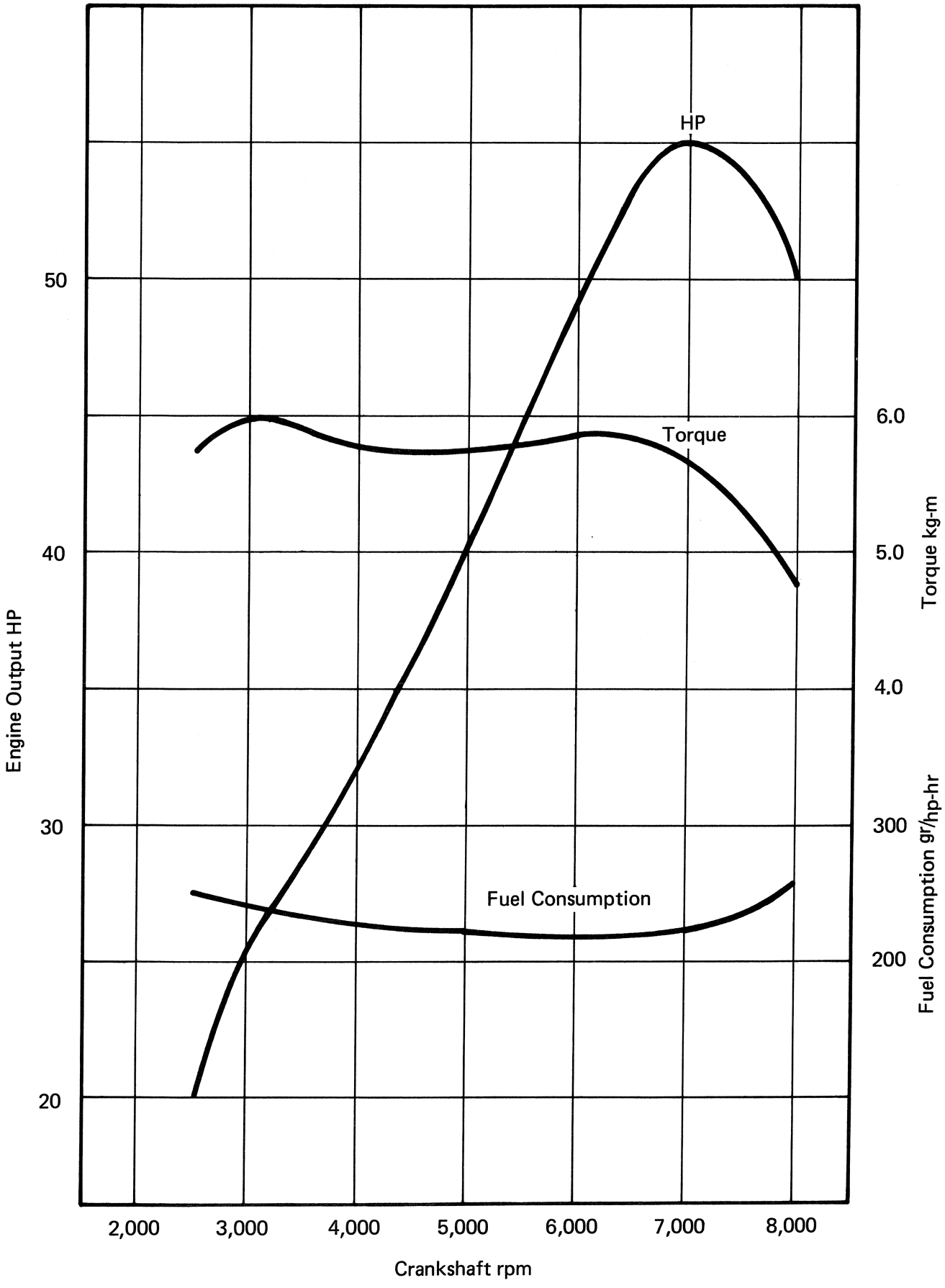

Running Performance Curves

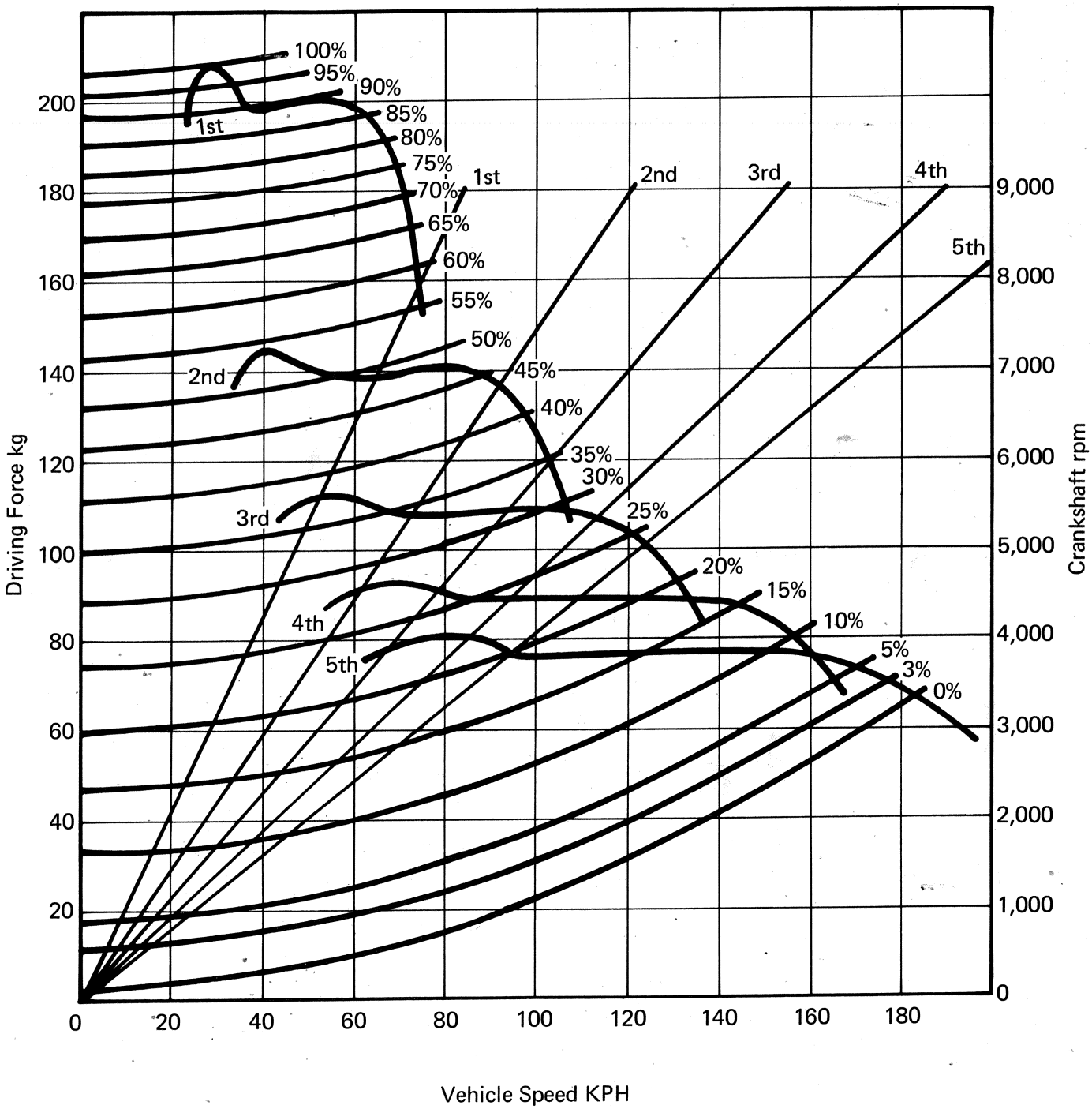

Adjustment

SPARK PLUGS

Neglecting the spark plug eventually leads to difficult starting and poor performance. If the spark plug is used for a long period, the electrodes gradually burn away and carbon builds up along the inside part. In accordance with the Periodic Maintenance Chart (Pg. 195), the plug should be removed for inspection, cleaning and to reset the gap. If the center electrode is fairly worn down, the plug should be replaced and the plug gap set to the specified gap.

- Remove the spark plugs using a spark plug wrench.
- Clean the spark plug preferably in a sand-blasting device, and them clean off any abrasive particles. The plug may also be cleaned using a high flash-point solvent and a wire brush or other suitable tool.
- Measure the gap with a wire-type thickness gauge. The gap should be 0.7~0.8 mm; if it is not, carefully bend the outer electrode, with a suitable tool to obtain the correct gap.

Spark Plug Gap ①

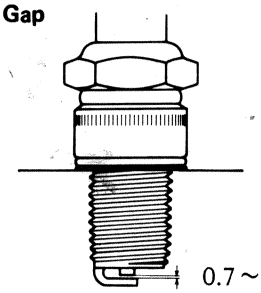

- Tighten the spark plugs in the cylinder head with 2.5~3.0 kg-m (18.0~22.0 ft-lbs) of torque.

NOTE: Refer to electrical maintenance section, page 181, for detailed spark plug information.

IGNITION TIMING

Incorrect ignition timing can cause poor performance, knocking, overheating, and serious engine damage. Periodic adjustment will be necessary to compensate for wear of parts, and the ignition timing must be checked whenever ignition related parts have been disassembled or replaced.

Correct ignition timing is achieved by first obtaining the correct contact breaker point gap (this can also be achieved by adjusting the dwell angle to the specified amount) and then changing the position of the adjusting plate. Often the first step returns the timing very close to the correct original setting. Once the timing has been adjusted, it may be checked for accuracy by the use of a strobe light.

Point Gap Adjustment (using a thickness gauge):

- Remove the contact breaker cover.
- Clean the points with clean paper or cloth or using an oil-free solvent. A business card soaked in trichloroethylene can be used to remove traces of oil. To repair light damage, use emery cloth or an oilstone. If the points are badly worn down or damaged, or if the spring is weak, replace the contact breaker.
- Lubricate point cam oil felt sparingly with suitable point cam lubricant. Do not overlubricate. Replace oil felt if it is worn.
- Using a 17 mm wrench on the crankshaft, turn the engine counterclockwise until the contact breaker points are at their widest opening.
- Determine the size of the point gap with a thickness gauge. The proper gap is 0.3 ~ 0.4 mm.

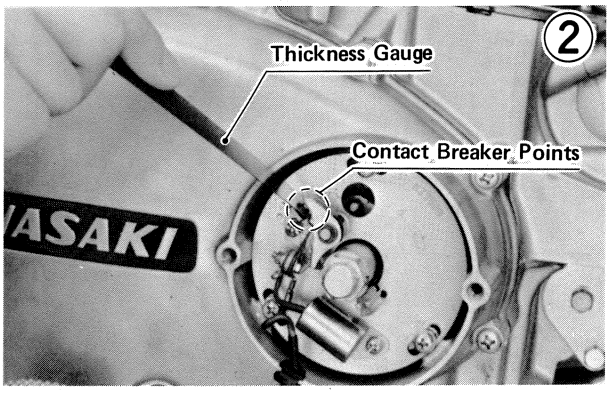

- If the gap is incorrect, loosen the contact breaker base screw just enough to allow the base to move. Open the points using a slot screwdriver on the contact breaker base pry point, and insert a blade thickness of 0.35 mm between the points. Tighten the contact breaker base screw, and remove the blade. Again turn the crankshaft, and recheck the point gap.

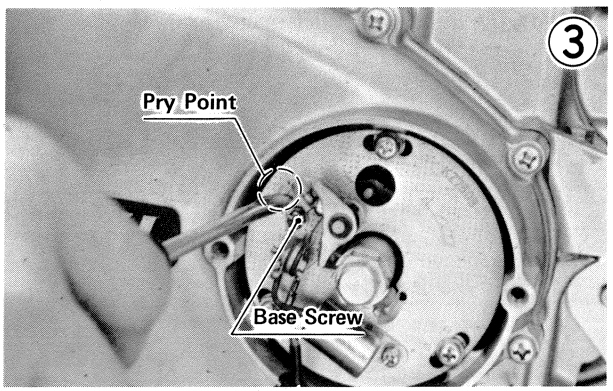

Point Gap Adjustment (using a dwell angle tester):

The most precise means to set the point gap is to use a dwell angle tester instead of a thickness gauge. If a dwell angle tester is available, adjust the dwell angle (point gap) in the following manner.

NOTE: The dwell angle is the angular range for which the contact breaker heel is off the cam lobe. This allows the current to flow in the ignition coil primary winding.

- Remove the contact breaker cover.
- Clean the points with clean paper or cloth or using an oil-free solvent. A business card soaked in trichloroethylene can be used to remove traces of oil. To repair

light damage, use emery cloth or an oilstone. If the points are badly worn down or damaged, or if the spring is weak, replace the contact breaker.

- Lubricate point cam oil felt sparingly with suitable point cam lubricant. Do not overlubricate. Replace oil felt if it is worn.
- Connect the dwell angle tester (–) lead to chassis ground (such as the frame or crankcase) and the (+) lead to the contact breaker terminal.
- If the dwell angle tester is calibrated in degrees, turn the selector knob to the lowest cam lobe setting.

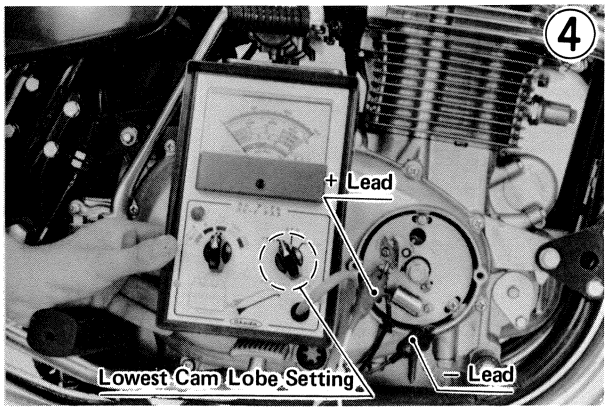

- Start the engine, and let it idle (below 1,050 rpm).

WARNING **Make sure that no tools, clothes, or meter leads ever touch the spinning crankshaft. Touching the crankshaft of a running engine could inflict an injury.**

- Note the reading on the tester. The dwell angle specification is 185 ~ 200° for a tester calibrated in degrees and 51.4 ~ 55.6% for one calibrated in percentage. If the tester setting is for more than one cam lobe, the reading on the tester must be multiplied by the cam lobe number to obtain the true dwell angle.

Table 1 Relation between Selector Knob Setting and Meter Reading†

Selector Knob Setting	Dwell Angle Tester Reading
1 cyl.	185.0 ~ 200.0°
2 cyls.	92.5 ~ 100.0°
3 cyls.	61.5 ~ 66.5°
4 cyls.	46.5 ~ 50.0°

† Running the engine at idling speed.

- If the dwell angle is not the same as the specification, loosen the contact breaker base screw just enough so that a slot screwdriver at the contact breaker pry point will be able to change the gap (Fig. 3). Adjust the gap until the dwell angle specification is obtained. Tighten the screw.
- Stop the engine, disconnect the tester.

Timing Test (Static):

- Check the point gap, and adjust if necessary.
- With the ignition switch turned off, turn the engine stop switch to one of the "OFF" positions to make the ohmmeter flicker easier to read.
- Turn the crankshaft so that the "F" mark on the timing advancer is aligned with the timing mark as shown in Fig. 5.

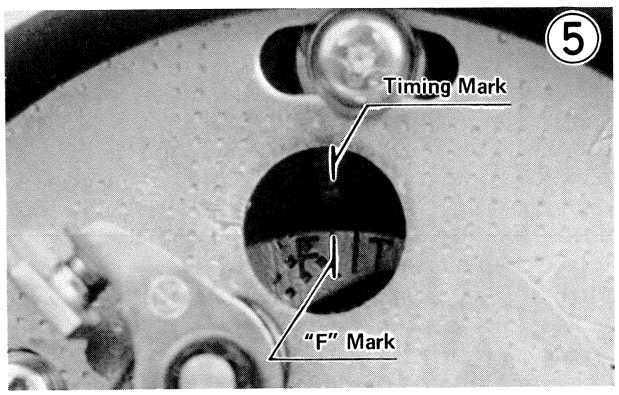

- Connect an ohmmeter set to the R x 1 range across the contact breaker points by securing one lead to chassis ground (such as the crankcase), and attaching the other lead firmly on the contact breaker terminal.

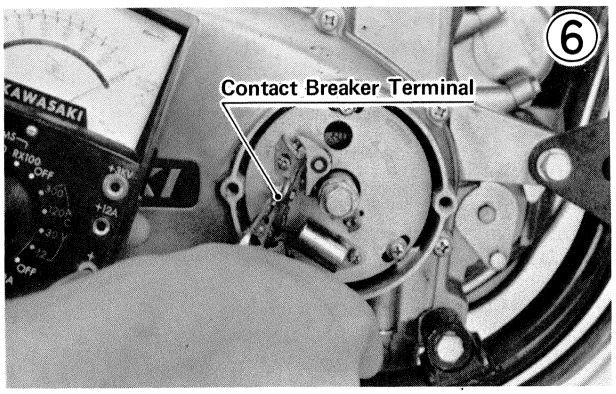

- Loosen the stator plate screws (3) just enough to allow the plate to move.
- Using a screwdriver on the adjusting plate pry point, turn the plate until the contact breaker points are just at the starting to open. The ohmmeter needle starts to rise when the points just begin to open. At this point, tighten the stator plate screws (3).

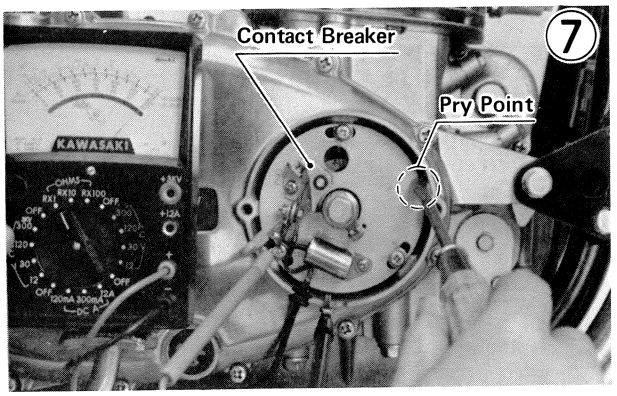

- Turning the crankshaft counterclockwise, check to see if the "F" mark is aligned with the timing mark when the needle jumps. If not, readjust.

●Disconnect the ohmmeter leads, and turn the engine stop switch back to the "RUN" position.
●Check the point gap.

Timing Test (Dynamic)

●Check the point gap, and adjust if necessary.
●Connect a strobe light in the manner prescribed by the manufacturer in order to check the ignition timing under operating conditions. One example is shown in Fig. 8.

Dynamic Ignition Timing Test 8

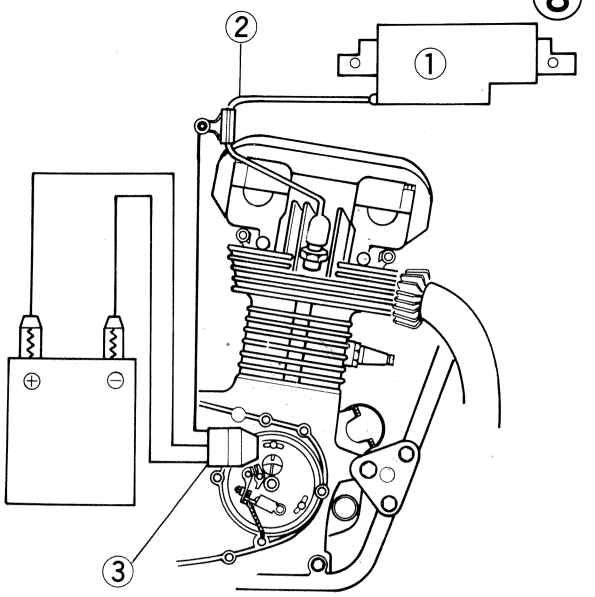

1. Ignition Coil
2. Spark Plug Lead
3. Strobe Light

●Start the engine, and direct the light at the timing mark. At idling speed the timing mark and the "F" mark on the timing advancer must be aligned for correct low rpm ignition timing. At 3,900 rpm or higher the timing mark and the pair of lines on the timing advancer as shown in Fig. 9 must be aligned for correct high rpm ignition timing. If both low and high rpm ignition timing are incorrect, adjust the timing as just explained. If either low or high rpm ignition timing is correct but the other is not, examine the timing advancer mechanism (Pg. 180).

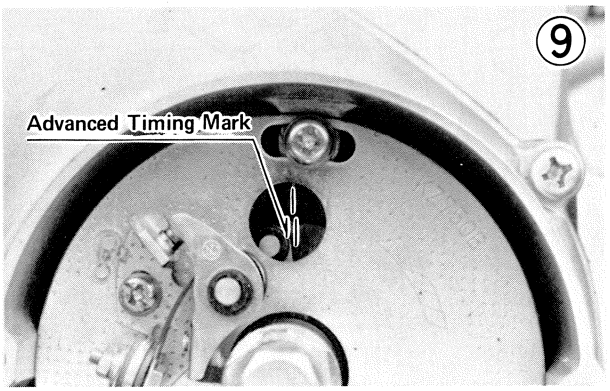

●Check the point gap.
●Install the contact breaker cover.

CAMSHAFT CHAIN

Camshaft chain and chain guide wear cause the chain to develop slack, which will cause noise and may result in engine damage. To keep the chain from making noise, periodic adjustment is necessary in accordance with the Periodic Maintenance Chart (Pg. 195).

However, if the adjustment fails to keep the chain from making noise, the chain guides have probably worn past the service limit and will need to be replaced.
NOTE: The camshaft chain must be adjusted when the cylinder head cover is in place. Adjusting the camshaft chain with the cylinder head cover removed will result in improper adjustment.

WARNING **During camshaft chain adjustment, never touch the engine and exhaust pipes or you may suffer burns.**

To adjust the camshaft chain:
●Remove the contact breaker cover.
●Remove the chain tensioner cap and **O** ring.
●Turn the crankshaft counterclockwise while watching the push rod (in the center of the push rod guide) move in and out. Continue turning the crankshaft counterclockwise until the push rod again reaches the innermost position, and then stop.

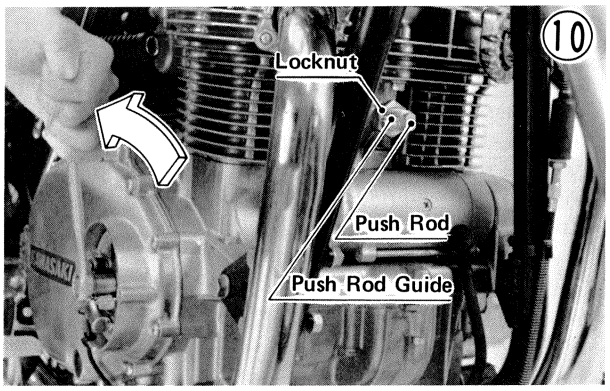

NOTE: Do not turn the crankshaft backwards (clockwise). Turning the crankshaft backwards may cause improper adjustment.
●Loosen the locknut, and screw in the push rod guide until the ends of the push rod guide and push rod are flush.

Cam Chain Tensioner 11

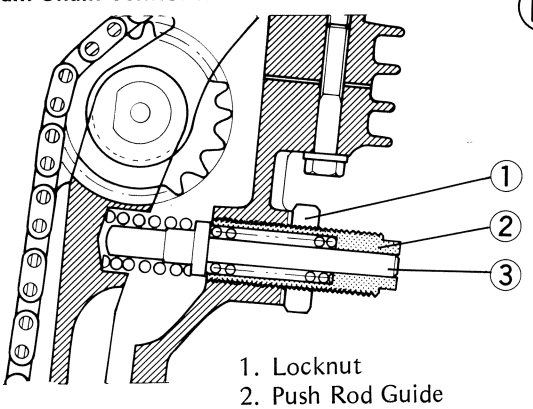

1. Locknut
2. Push Rod Guide
3. Push Rod

CAUTION **Be sure that the ends are flush. Never overtighten the push rod guide after the ends are just flush, or the tensioner or chain may become damaged.**

- Tighten the locknut, and install the chain tensioner cap and **O** ring.
- Install the contact breaker cover.

VALVE CLEARANCE

Valve and valve seat wear decreases valve clearance, upsetting valve timing. If valve clearance is left unadjusted, the wear will eventually cause the valves to remain partly open, which lowers performance, burns the valves and valve seats, and may cause serious engine damage.

Valve clearance for each valve should be checked and, if incorrect, adjusted in accordance with the Periodic Maintenance Chart (Pg. 195) and any time that clearance may have been affected by disassembly.

When carrying out adjustment, be careful to adjust within the specified clearance. Adjusting to a larger value will both disturb valve timing and cause engine noise.

NOTE: Valve clearance must be checked when the engine is cold.

To check and adjust the valve clearance:

- Remove the fuel tank (Pg. 32).
- Remove the spark plug cap from both plugs.
- Disconnect the ignition coil blue lead and yellow/red lead (Fig. 105).
- Take out the bolts, nuts, flat washers, and lock washers, and remove the brackets connecting the cylinder head cover to the frame (Fig. 105).
- Remove the cylinder head cover bolts (14), and lift the cover off the cylinder head and out of the way (Fig. 107).
- Remove the contact breaker cover.
- Using a 17 mm wrench on the crankshaft and checking one valve at a time, turn the crankshaft so that the cam lobe (highest part of the cam) is pointing directly away from the valve lifter.

Valve Clearance Measurement (12)

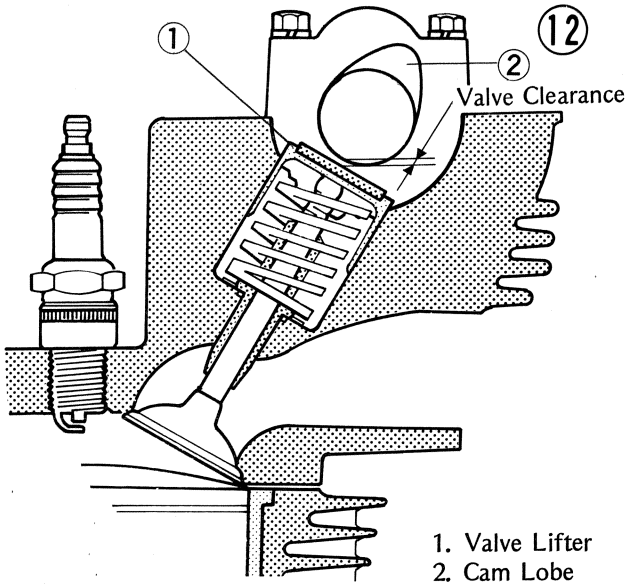

1. Valve Lifter
2. Cam Lobe

- Measure the clearance between the cam and the shim in the top of the valve lifter. The correct clearance is 0.05 ~ 0.10 mm.
- If the valve clearance is incorrect, continue the following procedures to replace the present shim with a new shim, which will give the proper clearance.

NOTE: If there is no clearance between the shift and cam, select a shim which is several sizes smaller and then remeasure the gap once it is installed.

- Use the valve lifter holder (special tool), according to the following instructions, to hold the valve lifter down; and then remove the shim.
  - ○Turn the crankshaft so that the cam points away from the lifter. Position the notch in the lifter so it points toward the opposite camshaft. This will allow the shim to be lifted and grasped later.
  - ○Turn the crankshaft so that the cam is pushing the lifter down.
  - ○Fit the tool in place.

Valve Lifter Holder (13)

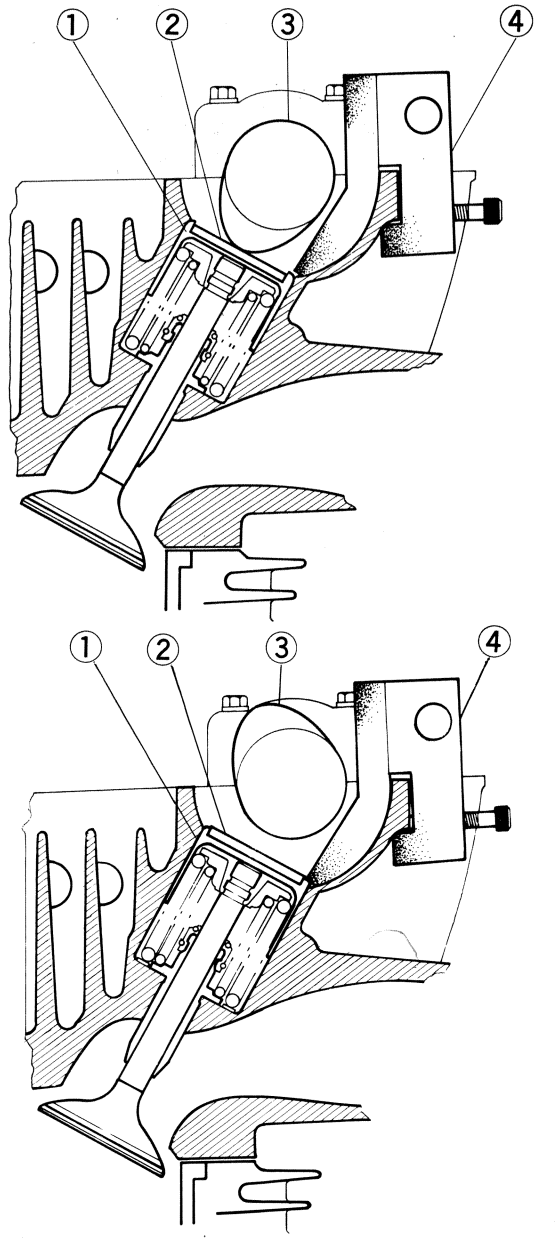

1. Valve Lifter
2. Shim
3. Camshaft
4. Valve Lifter Holder

○Turn the crankshaft in the proper direction so that the cam points away from the lifter, and remove the shim.

NOTE: The camshaft rotates in the same direction as the crankshaft.

CAUTION **When the valve lifter holder is fitted to a valve assembly, and the crankshaft is turned to rotate the camshaft, it MUST be turned so the cam lobe turns away from the tool. If it is turned toward the tool, serious engine damage can result.**

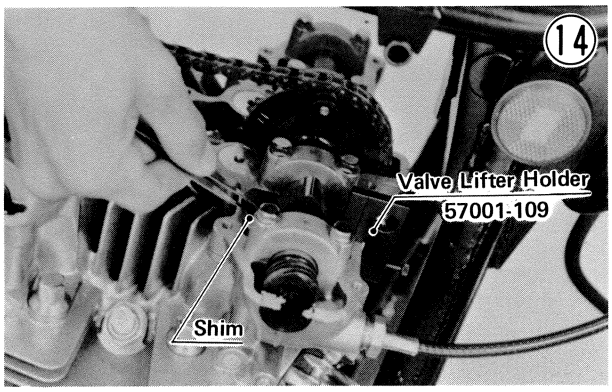

NOTE: If the camshafts are unbolted instead of using a special tool to remove the shims, see information on valve timing (Pg. 119) and camshaft installation (Pg. 38) before tightening the shafts in place.

- Check the present shim thickness (shim size) which is printed on the shim surface, and referring to the Valve Adjustment Chart (Pg. 199), select a new shim which brings valve clearance within the specified limits. Shims are available in sizes from 2.2 ~ 3.4 mm, in increments of 0.05 mm.
- Insert the new shim on the valve lifter with the numbered side facing downwards so the number won't be polished off by the action of the cam.

CAUTION **1. Do not put the shim stock under the shim. This may cause the shim to pop out at high rpm, causing extensive engine damage.**

2. Do not grind the shim. This may cause it to fracture, causing extensive engine damage.

NOTE: If the smallest shim does not sufficiently increase clearance, the valve seat is probably worn. In this case, (a) repair the valve seat (Pg. 125), (b) grind down the stem lightly (Pg. 123), (c) then recheck the clearance.

THROTTLE CABLES

There are two throttle cables, the accelerator cable for opening the butterfly valves and decelerator cable for closing them. If the cables are too loose from either cable stretch or maladjustment, the excessive play in the throttle grip will cause a delay in throttle response, especially at low rpm. Also, the butterfly valves may not open fully at full throttle. On the other hand, if the cables are too tight, the throttle will be hard to control, and the idling speed will be erratic.

To adjust the throttle cable play:

- Loosen the locknuts and screw the adjusting nuts in fully at the upper end of the throttle cables so as to give the throttle grip plenty of play.

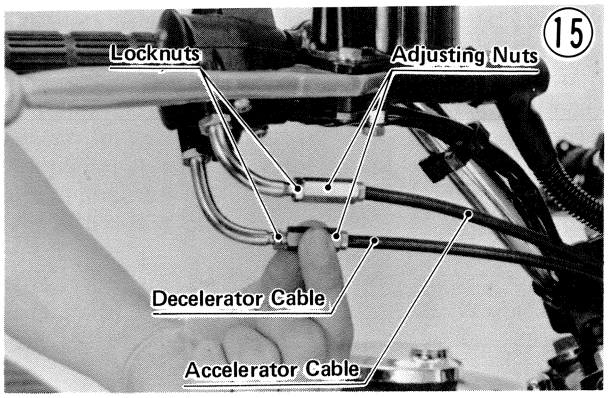

- Turn out the decelerator throttle cbale adjusting nut 3 turns. There must still be play in the throttle grip; if there is not, loosen the locknut at the lower end of the decelerator cable, turn in the adjuster to create a small amount of play, and retighten the locknut.

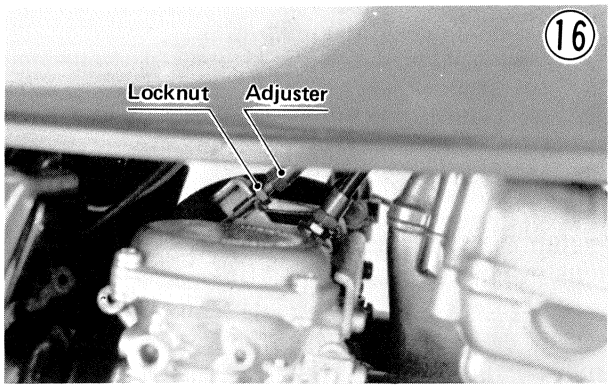

- Turn out the decelerator throttle cable adjusting nut 3 turns. There must still be play in the throttle grip; if tighten the locknut.
- Turn in the decelerator cable adjusting nut until 2 ~ 3 mm of throttle grip play is obtained. Tighten the locknut.

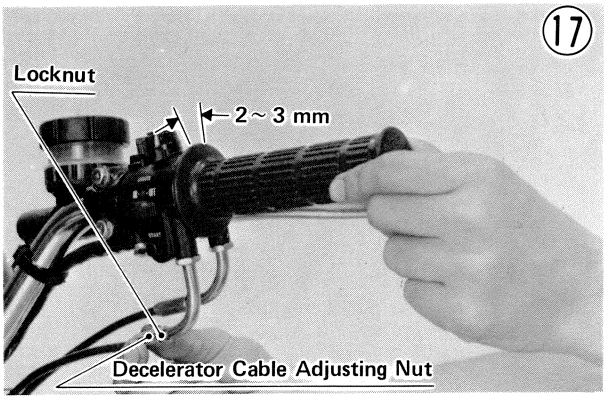

CARBURETORS

Although some internal carburetor parts can be adjusted by replacement, repositioning, etc., these adjustments are covered in the maintenance section of this manual. The following procedure covers the idling adjustment, which should be inspected during periodic maintenance or whenever the idling setting has been disturbed. This procedure also includes the necessary steps for obtaining proper carburetor synchronization.

When the idling speed is too low, the engine may stall; when the idling speed is too high, the fuel consumption becomes excessive, and the resulting lack of engine braking may make the motorcycle difficult to control. Poor carburetor synchronization will cause unstable idling, sluggish throttle response, and reduced engine power and performance.

The following procedure consists of four parts: preliminary checks, preliminary adjustment (sometimes necessary), idling adjustment, and carburetor synchronization.

Preliminary Checks:

- In order to obtain correct idling adjustment, first check the following and adjust if necessary:
  - Engine Oil (Pg. 196)
  - Spark Plugs (Pg. 9)
  - Ignition Timing (Pg. 9)
  - Cylinder Compression (Pg. 128)
  - Air Cleaner Element (Pg. 112)
  - Air Cleaner Duct and Carburetor Holder Leakage (Pg. 33)
  - Camshaft Chain (Pg. 11)
  - Valve Clearance (Pg. 12)

Preliminary Adjustment:

If the engine idling is especially rough, it may be necessary to synchronize the butterfly valves before making the idling adjustment:

- Remove the carburetors from the engine (Pg. 33) leaving the accelerator and decelerator cables connected.
- If the butterfly valves do not close at the same time by visual inspection, synchronize them using the following procedure:
  - Back off the lever stopper screw and the idling screw so there is enough clearance to allow the butterfly valves to seat in their bores.

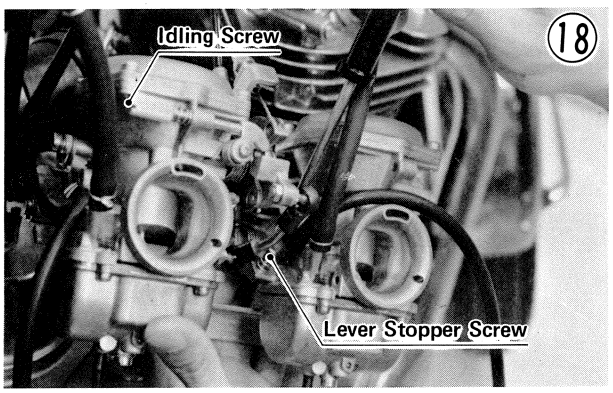

- Turn the idling screw in until the butterfly valves just begin to open and there is a slight gap between the valve and bore.
- Loosen the locknut and turn the balance adjuster screw to obtain the same gap between the butterfly valve and the bore in each carburetor.

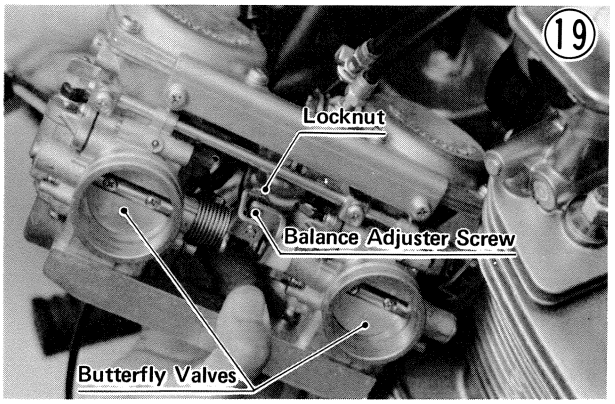

- Tighten the locknut.
- Back out the idling screw again, and turn in the lever stopper screw so that it contacts the lever just before the butterfly valves close. Idling screw position will be readjusted later.

- Install the carburetors (Pg. 33), and check the play in the cables (Pg. 13).

Idling Adjustment:

- Turn in the pilot screw of each carburetor until it seats lightly, and then back it out 1½ turns.

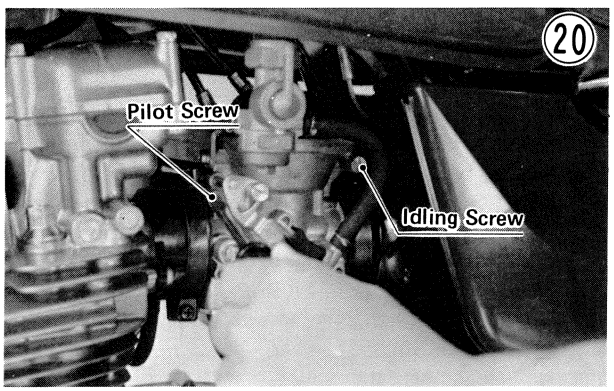

- Start the engine, and warm it up for 5 minutes.
- Adjust idling speed to 950 ~ 1,050 rpm by turning the idling screw.

NOTE: A satisfactory result may be obtained by using the procedure just described, but an experienced mechanic can get a more precise adjustment of engine idle mixture by using the following 3 steps.

- Turn both pilot screws to obtain the highest engine rpm. Normally, this pilot screw adjustment will be within about a half turn in or out from the specified pilot screw setting.
- Adjust idling speed to 950 ~ 1,050 rpm by turning the idling screw.

○Check to see if the engine rpm rises when the pilot screw positions are altered. If it rises, repeat the last two steps alternately until the engine is idling satisfactorily, and engine speed cannot be increased by further adjustment of the pilot screws.

- Open and close the throttle a few times to make sure that the idling speed does not change. Readjust if necessary.

NOTE: With the engine idling, turn the handlebar to either side. If handlebar movement changes idling speed, the throttle cables may be improperly adjusted or incorrectly routed, or they may be damaged.

WARNING **Operation with improperly adjusted, incorrectly routed, or damaged cables could result in an unsafe riding condition.**

Carburetor Synchronization:

Adjustment of carburetor synchronization, necessary for smooth engine operation, can be obtained through the use of either of the following two procedures, depending on whether or not vacuum gauges are available.

NOTE: During both of the procedures, the fuel tank will be removed. In most cases, the adjustment can be performed in a short enough time to permit the running of the engine with the fuel remaining in the float bowls. If this is not the case, it will be necessary to temporarily replace the standard fuel lines with lines long enough to reach the fuel tank while it is located on your workbench.

WARNING **Use extreme caution when working with gasoline, open fuel lines, etc. to avoid a fire or explosion.**

Without Vacuum Gauges:

- Start the engine, and warm it up for 5 minutes.
- Perform idle adjustment (Pg. 14).
- Listen to exhaust noise, and place your hands at the rear of the mufflers to feel exhaust pressure.

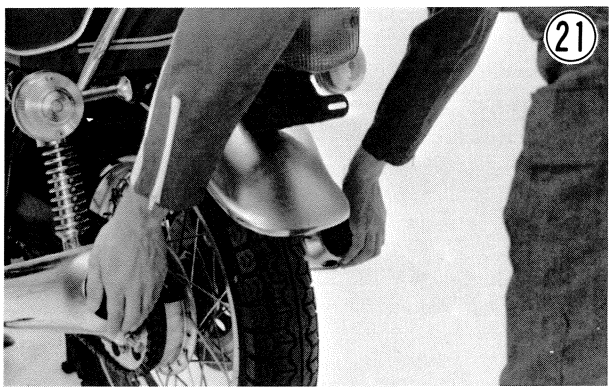

- If there is a difference in noise or exhaust pressure between the cylinders, stop the engine and remove the fuel tank (Pg. 32). With the engine running, alter the balance adjusting screw position with the balance adjuster (special tool) to minimize the difference in noise or exhaust pressure (Fig. 23).
- Adjust the idling speed to 950 ~ 1,050 rpm with the idling screw, if necessary.
- Re-check the exhaust noise and pressure, and if there is a difference between the cylinders, repeat the last 2 steps.
- When the adjusting screw is properly positioned, tighten the locknut, stop the engine, and install the fuel tank (Pg. 32).

With Vacuum Gauges:

- Start the engine, and warm it up for 5 minutes.
- Perform idle adjustment (Pg. 14).
- Remove the hose from the vacuum gauge attachments on the carburetor holder, and attach the vacuum gauges.

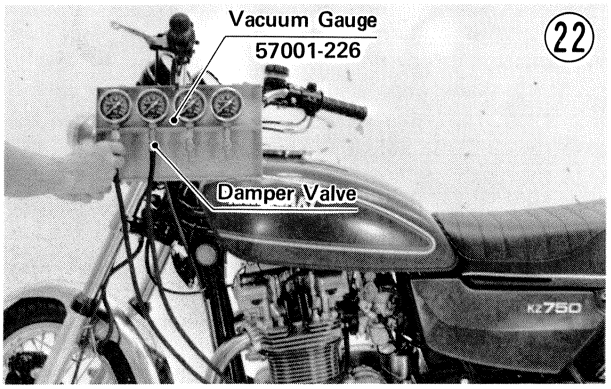

- With the engine running at idling speed, close the vacuum gauge damper valves until gauge needle flutter is less than 3 cm Hg. Normal vacuum gauge reading is 17 ~ 23 cm Hg, and the difference between the two cylinders should be less than 2 cm Hg.
- If there is a difference of more than 2 cm Hg between the two gauges, stop the engine, remove the fuel tank (Pg. 32).
- With the engine running, alter the balance adjusting screw position with the balance adjuster (special tool) to obtain a difference in readings which is less than 2 cm Hg.

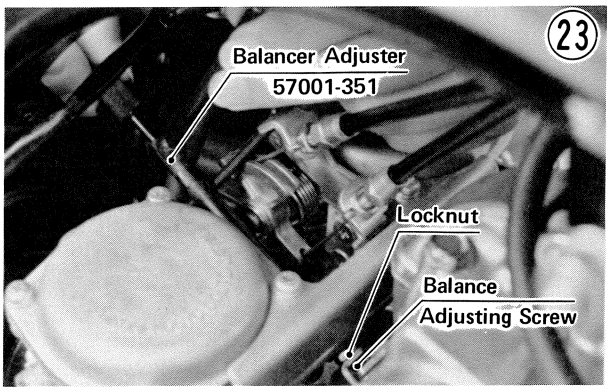

- Adjust the idling speed to 950 ~ 1,050 rpm with the idling screw, if necessary.
- Recheck the difference in vacuum gauge readings, and if there is a difference of more than 2 cm Hg, repeat the last 2 steps.
- When the balance adjusting screw is properly positioned, tighten the balance adjusting screw locknut and stop the engine.
- Detach the vacuum gauges, and install the hose on the intake manifold vacuum gauge attachments.
- Install the fuel tank (Pg. 32).

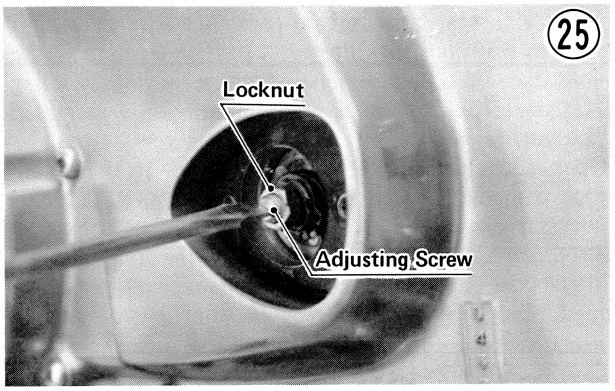

CLUTCH

Stretching of the clutch cable causes the clutch lever to develop excessive play. Too much play will prevent complete disengagement and may result in shifting difficulty and possible clutch and transmission damage. Most of the play must be adjusted out, but a small amount must remain so that the clutch release lever will function properly.

Clutch plate wear also causes the clutch to go out of adjustment. This wear causes the play between the push rod and the adjusting screw to gradually diminish until the push rod touches the adjusting screw. When this play is lost, the clutch will not engage fully, causing the clutch to slip.

NOTE: Even though the proper amount of play exists at the clutch lever, clutch lever play alone cannot be used to determine whether or not the clutch requires adjustment.

The adjustment procedure which follows compensates for both cable stretch and plate wear.

WARNING **To avoid a serious burn, never touch the engine or exhaust pipes during clutch adjustment.**

To adjust the clutch:

- Screw in fully the locknut and adjusting nut at the center of the clutch cable to give the cable plenty of play.
- Loosen the knurled locknut at the clutch lever just enough so that the adjuster will turn freely, and then turn the adjuster to make a 5 ~ 6 mm gap between the adjuster and knurled locknut.

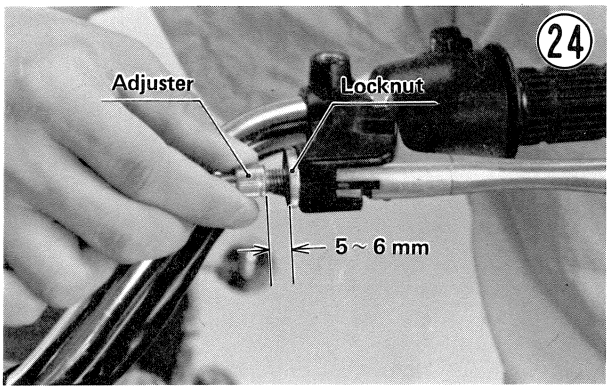

- Remove the clutch adjusting cover.
- Loosen the locknut, and back out the clutch adjusting screw 3 or 4 turns until the screw turns without drag.
- Turn the adjusting screw in until it becomes hard to turn. This is the point where the clutch is just starting to release.
- Back out the adjusting screw ½ turn from that point, and tighten the locknut.
- Make sure the lower end of the clutch outer cable is properly fitted into the hole in the engine sprocket cover.

WARNING **If the cable is not fully seated in the engine cover hole, it could slip into place later and the clutch would not disengage.**

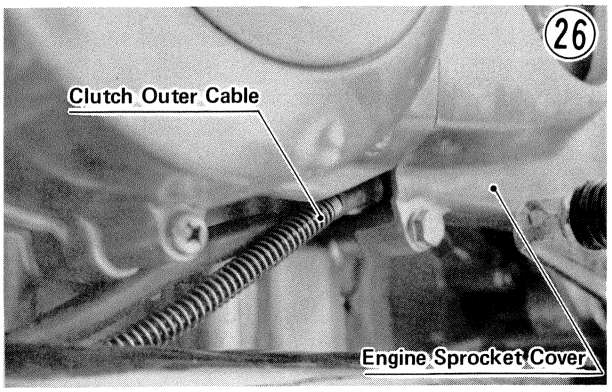

- Take up all the cable play with the adjusting nut at the center of the cable, and then tighten the locknut.
- Turn the adjuster at the clutch lever so that the clutch lever will have 2 ~ 3 mm of play as shown in Fig. 27, and tighten the locknut.

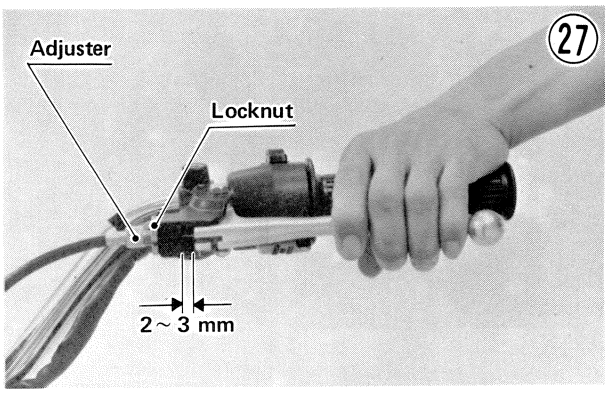

- Install the clutch adjusting cover.

REAR SHOCK ABSORBERS

The rear shock absorbers can be adjusted to one of three positions to suit riding conditions. They can be left soft for average riding but should be adjusted harder for high speed riding, riding on bad roads, or riding with a passenger. Shock absorbers adjusted either too soft or too hard adversely affect riding comfort and stability. To adjust the rear shock absorbers:

- Turn the adjusting sleeve on each shock absorber to the desired position with a hook spanner. The higher the adjusting sleeve is positioned, the stronger the spring tension, and the harder the ride.

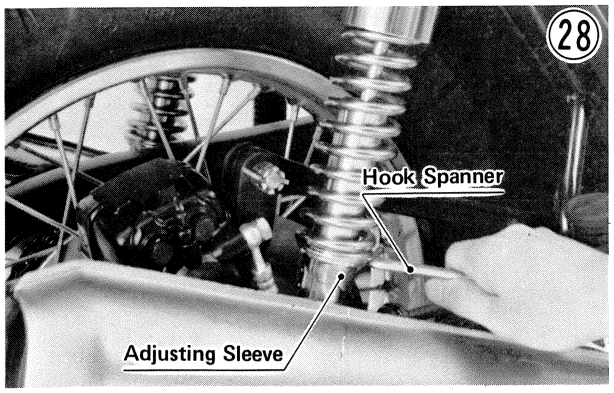

- Check to see that both adjusting sleeves are turned to the same relative position.

WARNING **If they are not adjusted to the same position, an unsafe riding condition may result.**

DRIVE CHAIN

Chain and sprocket wear causes the chain to stretch, which results in power loss, accelerated chain and sprocket wear, and increased noise. A chain that has been adjusted too loose may be thrown off the sprockets. A chain that has been adjusted too tight will wear excessively and possibly break.

- To determine whether or not the chain requires adjustment, first set the motorcycle up on its center stand. Rotate the rear wheel to find the position where the chain is tightest, and measure the vertical movement midway between the sprockets. If it is less than 25 mm or more than 40 mm, adjust the chain so that the vertical movement will be about 25~35 mm.

Chain Slack

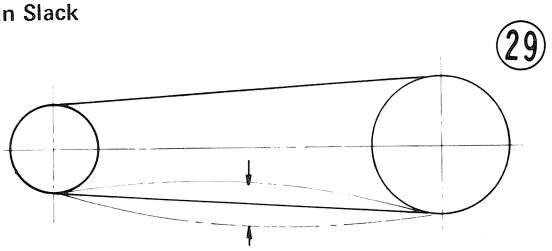

CAUTION

1. **A chain worn past the service limit (Pg. 155) must be replaced. Such wear cannot be adequately compensated for by adjustment.**
2. **Take care not to damage the brake hose. Damaging the brake line greatly reduces the brake line strength and causes brake fluid leakage, resulting in the loss of brake control.**

- Remove the axle cotter pin, and loosen the axle nut.

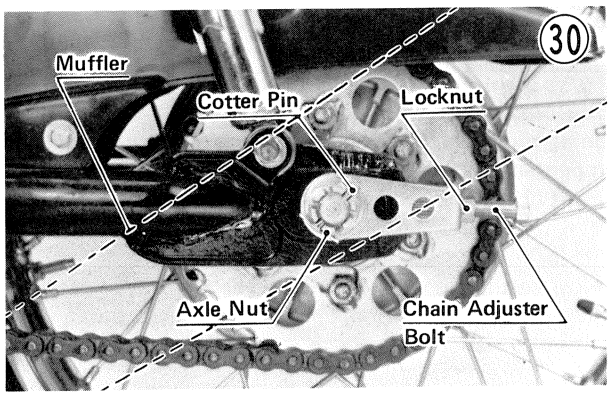

- Remove the cotter pin, and loosen the nut at the rear end of the torque link.

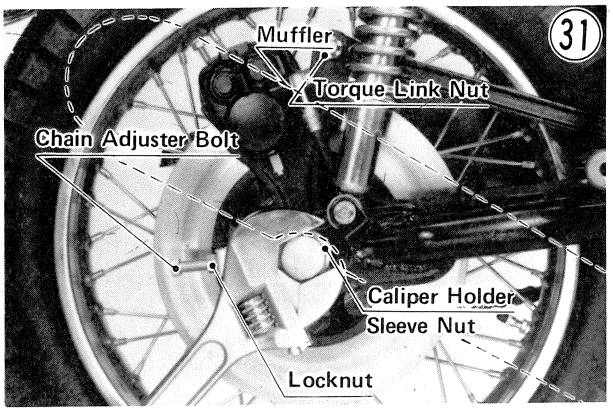

- Loosen the 36 mm caliper holder sleeve nut.
- Loosen the left and right chain adjuster locknuts.
- If the chain is too tight, back out the left and right chain adjuster bolts, and kick the wheel forward until the chain is too loose.

●Turn in the left and right chain adjuster bolts evenly until the drive chain has the correct amount of slack. To keep the chain and wheel aligned, the notch on the left chain adjuster should align with the same swing arm mark that the right chain adjuster notch aligns with.

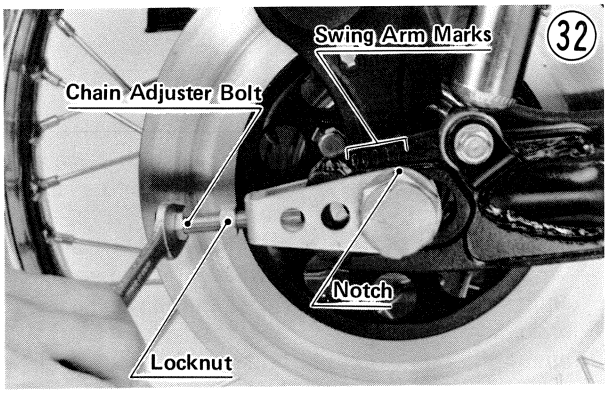

●Tighten both chain adjuster locknuts, and then tighten the caliper holder sleeve nut securely.

WARNING **Tighten the caliper sleeve nut prior to tightening the axle nut. If the nut tightening order is reversed, the rear axle will not be securely mounted on the swing arm. This may cause misalignment of wheels, and result in loss of control.**

●Tighten the axle nut with 10 ~ 14 kg-m (72 ~ 101 ft-lbs) of torque.

●Rotate the wheel, measure the vertical movement again at the tightest position, and readjust if necessary.

●Insert a new cotter pin through the axle nut and axle, and spread its ends.

●Tighten the torque link rear nut with 2.6 ~ 3.5 kg-m (19.0 ~ 25 ft-lbs) of torque, insert a new cotter pin, and spread its ends.

BRAKES

Disc and disc pad wear is automatically compensated for and has no effect on brake lever or brake pedal action. However, the brake lever or pedal may occasionally require adjustment due to wear inside the lever or pedal assembly itself, or in case of disassembly. Excessive play must be taken up to keep the lever from vibrating and to keep the braking action lag time to a minimum, but enough play must be left to ensure a full braking stroke.

NOTE: Before adjusting the brakes, be sure that air is bled from the brake lines (Pg. 161).

Front Brake Lever

NOTE: There are no parts that require adjustment on the front brake of 1978 and later models.

●Straighten the part of the washer that is bent over the side of the adjusting bolt locknut.

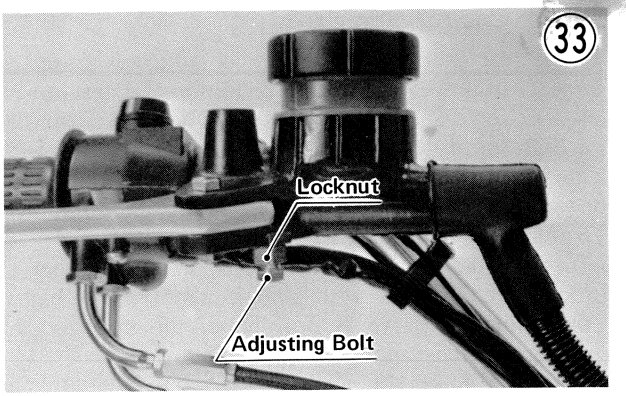

●Loosen the locknut, turn the adjusting bolt a fraction of a turn so that lever play is 3 ~ 5 mm, and retighten the locknut with 1.8 ~ 2.3 kg-m (13.0 ~ 16.5 ft-lbs) of torque.

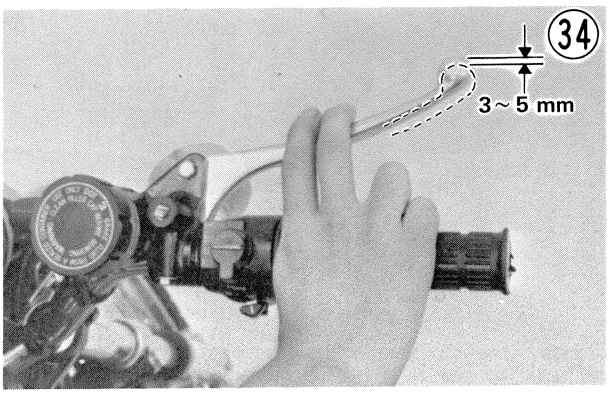

●Bend back part of the washer over the side of the locknut.

Rear Brake Pedal

Brake Pedal Position:

●When the brake pedal is in its rest position, it should be 20 ~ 30 mm lower than the top of the footpeg. If it is too high, loosen the locknut and shorten the brake push rod to give the brake pedal plenty of play. If it is too low, go to the next step.

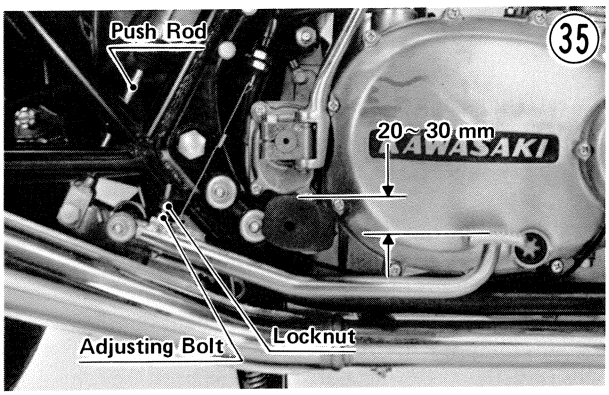

●Loosen the locknut and then turn the brake pedal adjusting bolt to obtain the correct pedal position. Tighten the locknut.

Rear Brake Pedal Play

- The brake pedal should have 8 ~ 10 mm of free play from the rest position before the push rod contacts the master cylinder piston.

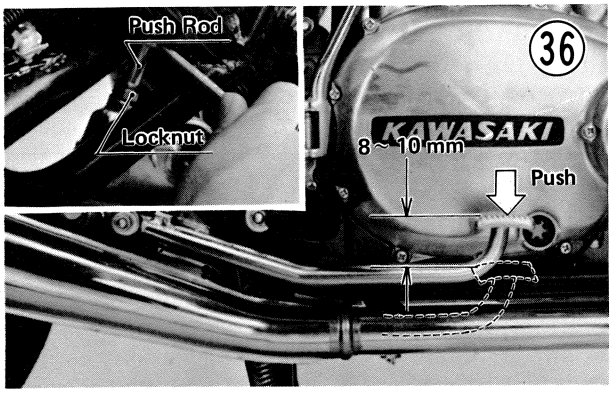

- To adjust play, loosen the locknut and turn the push rod. Tighten the locknut.
- Check the rear brake light switch.
- Check for brake drag.
- Check braking effectiveness.

BRAKE LIGHT SWITCH

The front brake light switch, mounted on the steering stem base, operates hydraulically and is non-adjustable. However, the rear brake light switch, activated by a spring attached to the brake pedal, requires periodic adjustment to compensate for any change in spring shape or tension.

Check the operation of the switch by turning on the ignition switch and depressing the brake pedal. The brake light should go on after 15 mm of pedal travel.

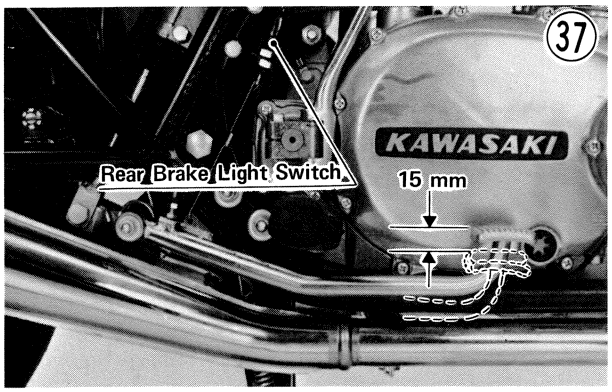

- Adjust the switch so that the brake light will go on after the proper amount of brake pedal travel. Raising the switch will make the light go on after less travel; lowering it will require more travel. Adjustment is made by altering the position of the mounting nuts on the brake switch body.

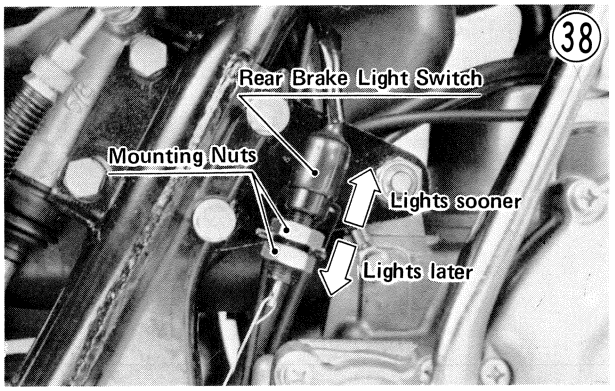

CAUTION **To avoid damaging the electrical connections inside the switch, be sure that the switch body does not turn during adjustment.**

STEERING

For safety, the steering should always be kept adjusted so that the handlebar will turn freely but have no play.

If the steering is too tight, it will be difficult to turn the handlebar quickly, the motorcycle may pull to one side, and the steering stem bearings may become damaged. If the steering is too loose, the handlebar will vibrate and the motorcycle will be unstable and difficult to steer in a straight line.

To check the steering adjustment, first place a stand or block under the engine so that the front wheel is raised off the ground. Push the handlebar lightly to either side; if it continues moving under its own momentum, the steering is not too tight. Squatting in front of the motorcycle, grasp the lower ends of the front fork at the axle, and push and pull the fork end back and forth; if play is felt, the steering is too loose.

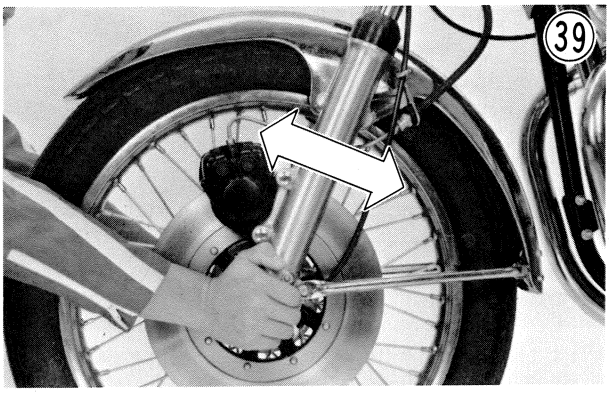

To adjust the steering:

- Put the motorcycle up on its center stand, and jack or prop up the engine so that the front wheel will be off the ground.
- Remove the fuel tank (Pg. 32) to avoid damaging the painted surface.

●Loose the front fork lower clamp bolts (2) to free the fork tubes from the steering stem base during adjustment.

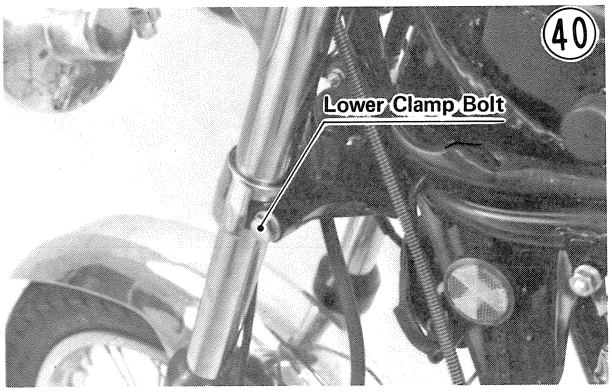

●Loosen the steering stem head bolt, clamp bolt, and steering stem locknut using the stem nut wrench (special tool) 1 or 2 turns until it turns without drag.

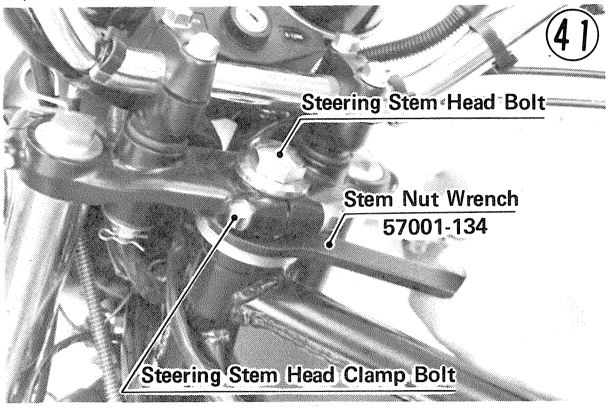

●Tighten the stem locknut to 2.7~3.3 kg-m (19.5~24.0 ft-lbs) of torque.

NOTE: If a suitable torque wrench is not available, tighten the steering stem locknut lightly (until it just becomes hard to turn), and then continue for another 1/16 turn (about 20° travel) from that point.

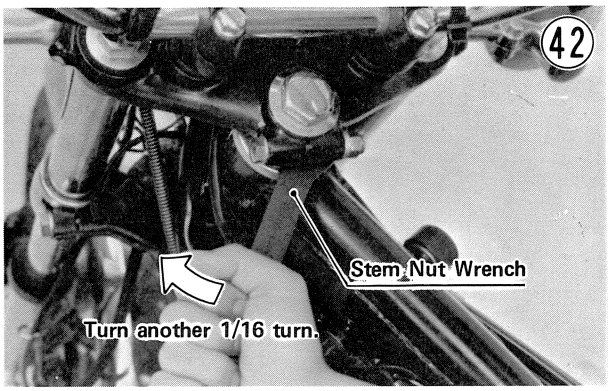

●Tighten down the steering stem head bolt to 4~5 kg-m (29~36 ft-lbs) of torque.
●Tighten the steering stem head clamp bolt to 1.6~2.2 kg-m (11.5~16.0 ft-lbs) of torque.
●Tighten the front fork lower clamp bolts (2) to 3.4~4.6 kg-m (25~33 ft-lbs) of torque.
●Check the steering again. If the steering is too tight or too loose in spite of correct adjustment, inspect the steering stem parts according to the maintenance part (Pg. 163).
●Remount the fuel tank (Pg. 32).

WHEEL BALANCE

To improve stability and decrease vibration at high speed, the front and rear wheels must be kept balanced.

Check and balance the wheels when required, or when a tire is replaced with a new one.

●Remove the wheel (Pg. 79 or 87).
●Check that all the spokes are tightened evenly and the rim runout is within the service limit (Pg. 154).
●Suspend the wheel so that it can be spun freely.
●Spin the wheel lightly, and mark the spoke at the top when the wheel stops.
●Repeat this procedure several times. If the wheel stop of its own accord in various positions, it is well balanced.
●However, if the wheel always stops in one position, attach a balance weight loosely to the marked spoke.

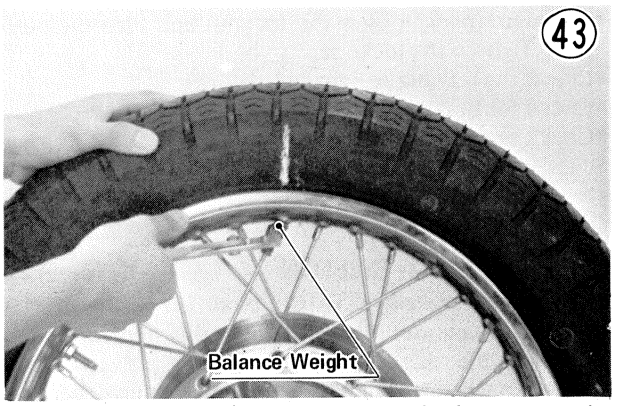

●Rotate the wheel ¼ turn, and see whether or not the wheel stops in this position. If it does, the correct balance weight is being used.

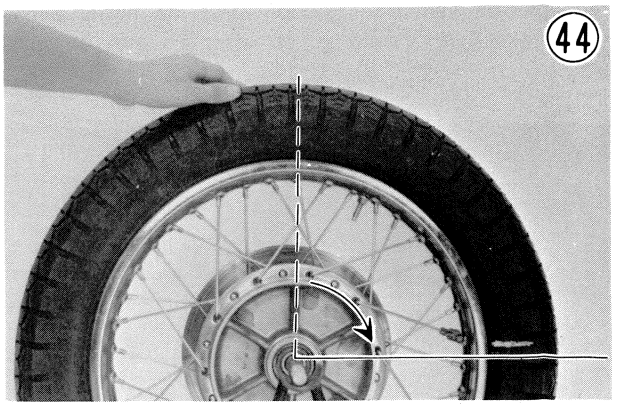

●If the wheel rotates and the weight goes up, replace the weight with the next heavier size. If the wheel rotates and the weight goes down, replace the weight with the next lighter size. Repeat these steps until the wheel remains at rest after being rotated ¼ turn.
●Rotate the wheel another ¼ turn and then another ¼ turn to see if the wheel is correctly balanced.
●Repeat the entire procedure as many times as necessary to achieve correct wheel balance, and then clamp on the balance weights firmly using pliers.
●Mount the wheel back onto the motorcycle (Pg. 80 or 87).

NOTES: 1. Balance weights are available from Kawasaki Dealers in 5, 10, 20, and 30 gram sizes. An imbalance of less than 10 grams will not usually affect running stability.
2. When removing a tire from a rim, mark the valve stem location on the tire so that it can be replaced in the same position.
3. When installing a new tire, be sure to go through the balancing procedure.

HEADLIGHT

The headlight beam is adjustable both horizontally and vertically. If not properly adjusted horizontally, the beam will point to one side rather than straight ahead. If adjusted too low vertically, neither low nor high beam will illuminate the road far enough ahead. If adjusted too high vertically, high beam will fail to illuminate the road close ahead, and low beam will blind oncoming drivers.

Horizontal Adjustment:

- Turn the small screw on the headlight rim in or out until the beam points straight ahead. Turning the adjusting screw clockwise makes the headlight beam point to the left.

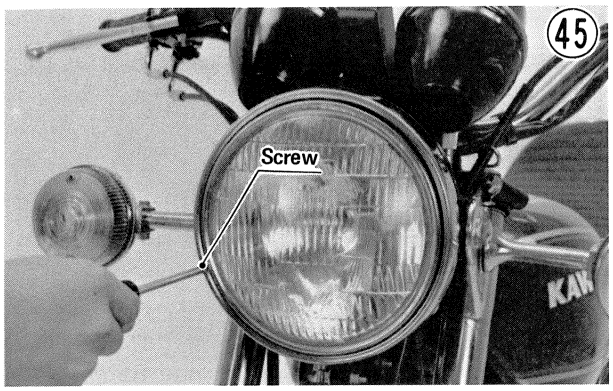

Vertical Adjustment:

- Loosen the headlight housing mounting bolts.
- Loosen the mounting bolts underneath the headlight. Move the headlight up or down until the vertical aim is correct, and tighten the bolt to hold it there.

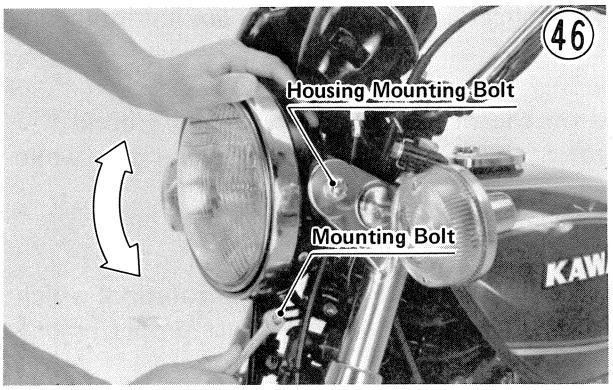

- Tighten the headlight housing mounting bolts.

HORN

The horn contacts wear down after long use and may need to be adjusted from time to time. Turning in the adjusting screw compensates for contact wear. If satisfactory horn performance cannot be obtained by this adjustment when the rest of the electrical system is functioning properly, the horn must be replaced. It cannot be disassembled.

CAUTION **Do not turn the adjusting screw in too far, since doing so will increase horn current with the possibility of burning out the horn coil.**

- Disconnect the horn leads, and connect an ammeter in series to the horn circuit. The + ammeter lead goes to the horn terminal lead and the – ammeter lead to the remaining black lead. Connect the brown lead and the remaining horn terminal together.

Horn Current Measurement

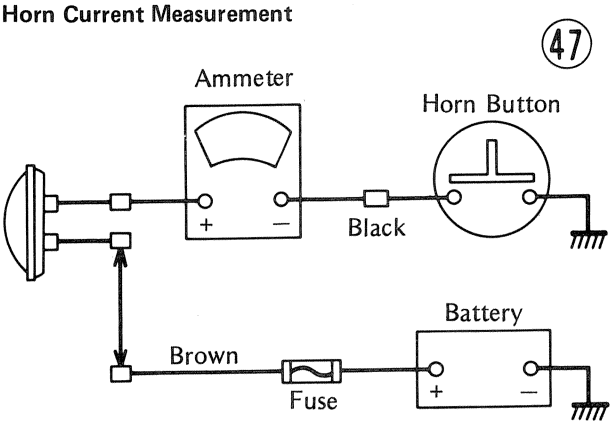

- Fully loosen the adjusting screw locknut.

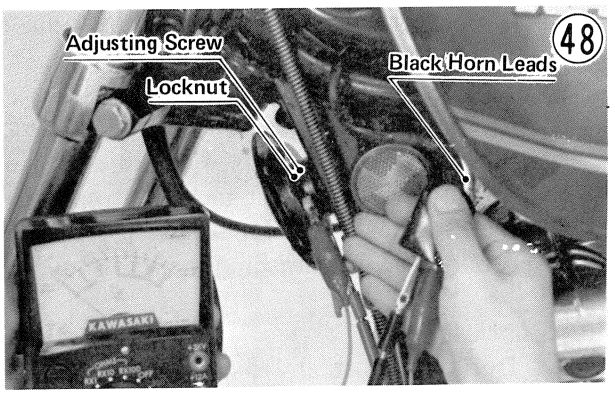

- Turn on the ignition key, and keep the horn button pressed while turning the horn adjusting screw. Adjust for the best horn sound while keeping the current between 2.0 ~ 3.0 amperes.
- Tighten the adjusting screw locknut.

NOTE: The horn will not sound properly if it is mounted incorrectly or if any cable or other part is touching it.

Disassembly

INTRODUCTION TO DISASSEMBLY

Detail has not been spared in this section in order that the motorcycle can not only be taken apart but also put back together properly as well. Photographs, diagrams, notes, cautions, warning, and detailed descriptions have been included wherever necessary. Nevertheless, even a detailed account has limitations; a certain amount of basic knowledge is also required for successful work.

Especially note the following:

(1) Edges

Watch for sharp edges, especially during major engine disassembly and assembly. Protect your hands with gloves or a piece of thick cloth when lifting the engine or turning it over.

(2) Dirt

Before removal and disassembly, clean the motorcycle. Any dirt entering the engine, carburetor or other parts will work as an abrasive and shorten the life of the motorcycle. For the same reason, before installing a new part, clean off any dust or metal filings.

(3) Tightening Sequence

Where there is tightening sequence indication in this Shop Manual; the bolts, nuts, or screws must be tightened in the order and method indicated. When installing a part with several bolts, nuts, or screws; they should all be started in their holes and tightened to a snug fit. Then tighten them evenly, according to the tightening sequence, to the specified torque. This is to avoid distortion of the part and/or causing gas or oil leakage.

Conversely when loosening the bolts, nuts, or screws; loosen all of them about a quarter of turn and then remove them.

(4) Torque

The torque values given in this Shop Manual should always be adhered to. Either too little or too much torque may lead to serious damage. Use a good quality, reliable torque wrench.

(5) Force

Common sense should dictate how much force is necessary in assembly and disassembly. If a part seems especially difficult to remove or install, stop and examine what may be causing the problem. Whenever tapping is necessary, tap lightly using a wooden or plastic-faced mallet. Use an impact driver for screws (particularly for the removal of screws held by a locking agent) in order to avoid damaging the screw heads.

(6) Lubricant

Don't use just any oil or grease. Some oils and greases in particular should be used only in certain applications and may be harmful if used in an application for which they are not intended.

(7) Battery Ground

Before performing any disassembly operations on the motorcycle, remove the ground (–) lead from the battery to prevent the possibility of accidentally turning the engine over while partially disassembled.

(8) Engine Rotation

When turning the crankshaft by hand, always turn it in the direction of normal rotation; which is counterclockwise, viewed from the right side of the engine. This will ensure proper adjustments.

(9) Lubrication

Engine wear is generally at its maximum while the engine is warming up and before all the rubbing surfaces have an adequate lubricative film. During assembly, oil should be applied to any bearing surface which has lost its lubricative film. Old grease and dirty oil should be cleaned off. Deteriorated grease has lost its lubricative quality and may contain abrasive foreign particles.

(10) Press

A part installed using a press or driver, such as a wheel bearing, should first be coated with oil on its outer or inner circumference so that it will go into place smoothly.

(11) Oil Seal, Grease Seal

An oil seal guide is required for certain oil seals during installation to avoid damage to the oil seal lips. Before a shaft passes through an oil seal, apply a little oil, preferably high temperature grease on the lips to reduce rubber to metal friction.

(12) Gasket, O Ring

When in doubt as to the condition of a gasket or O ring, replace it with a new one. The mating surfaces around the gasket should be free of foreign matter and perfectly smooth to avoid oil or compression leaks.

(13) Liquid Gasket, Non-permanent Locking Agent

Before using liquid gasket or non-permanent locking agent, wash or wipe the surfaces where liquid gasket or non-permanent locking agent are applied. Do not apply them excessively, because excessive amounts could block the engine oil passages and cause serious engine damage.

(14) Ball Bearing, Oil Seal, Grease Seal Installation

When installing a ball bearing, the bearing race, which is affected by friction, should be pushed by a suitable driver. This prevents severe stress on the balls and races, and prevents races and balls from being dented. Press a ball bearing until it stops at the stopper in the hole or on the shaft.

Seals should be pressed into place using a suitable driver, which contacts evenly with the side of the seal until the face of the seal is even with the end of the hole.

ENGINE

Removal:

- With the motorcycle up on its center stand, place an oil pan beneath the engine, and remove the engine drain plug to drain out the oil.

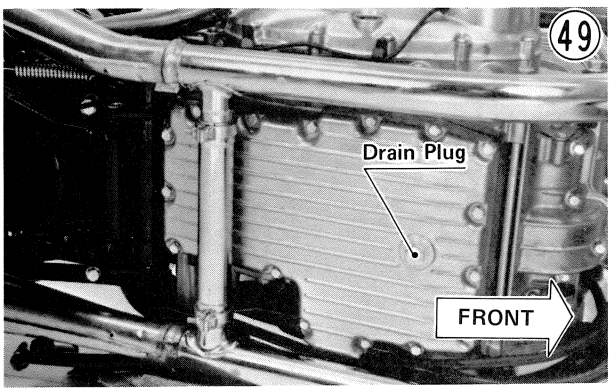

*● After draining the oil, replace the drain plug with its aluminum gasket and tighten the plug with 2.7 ~ 3.3 kg-m (19.5 ~ 24.0 ft-lbs) of torque.

- Pull off the right and left side covers.
- Turn the fuel tap to the "OFF" position, slide down the hose clamps, and pull the fuel hoses (2) off the tap.
- Unlock the seat and swing it open.
- Unhook the rubber retaining band, first lift up the rear end of the fuel tank about 30 mm and then pull the fuel tank off towards the rear.

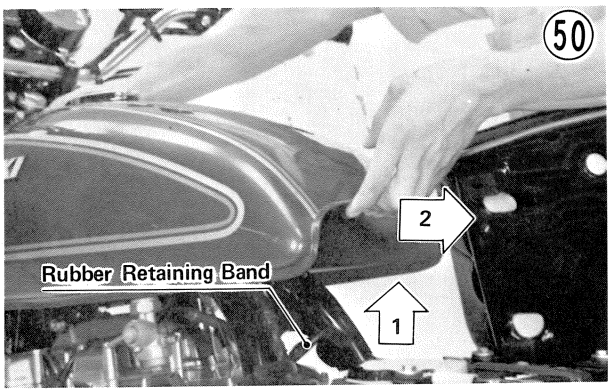

- Pull off the spark plug lead from each spark plug and free the lead from its clamp on the cylinder head cover.
- Remove the left foot peg nuts and washers (2 ea), and remove the foot peg.

●Check to see that the transmission is in neutral, then take out the shift pedal bolt, and remove the shift pedal.

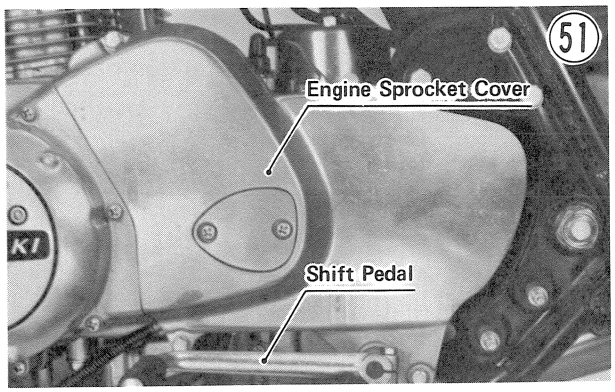

●Remove the engine sprocket cover bolts (4), and pull the cover free from the crankcase.
●Pull out the engine sprocket cover knock pins (2), if they are left on the engine side.

NOTE: This procedure prevents the knock pins from catching the engine mounting bracket when the engine is lifted up.

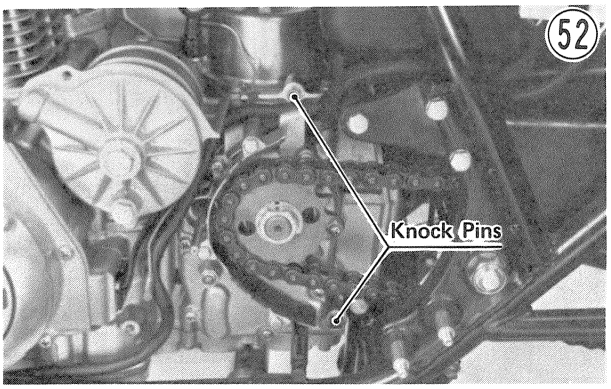

●Remove the cotter pin from the clutch release lever and free the clutch inner cable tip from the lever and engine sprocket cover.

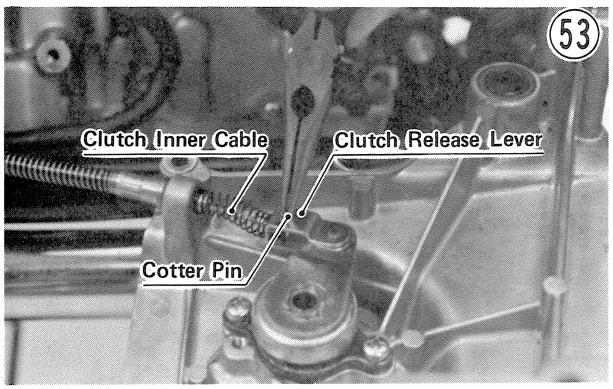

●Pull out the clutch cable through the engine and the frame, and situate the cable so that it will not get damaged during engine removal.
●Loosen both clamps that secure the muffler connecting pipe to the mufflers.

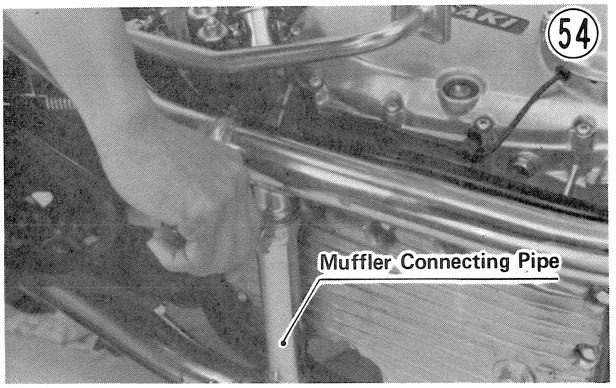

●Remove the left muffler collar nuts (2), and slide the muffler collar off its cylinder head studs.

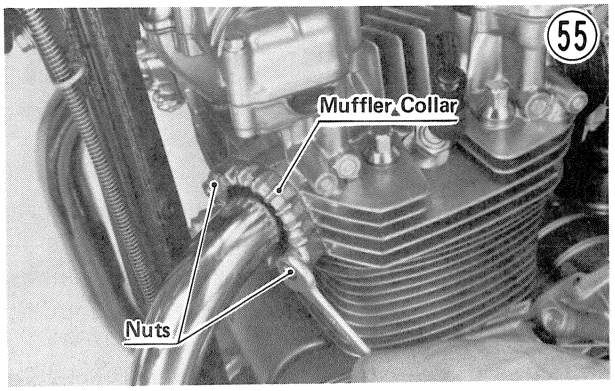

●Remove the left rear foot peg nut and flat washer to complete muffler removal. Also, remove the muffler collar, gasket, and split keeper.
●Remove the right front foot peg, right rear foot peg, and right muffler as in the same way as described above.
●Unscrew the tachometer cable from the cylinder head and pull off the cable from the cylinder head.
●Take out the cotter pins from the rear torque link nut and the rear axle nut.

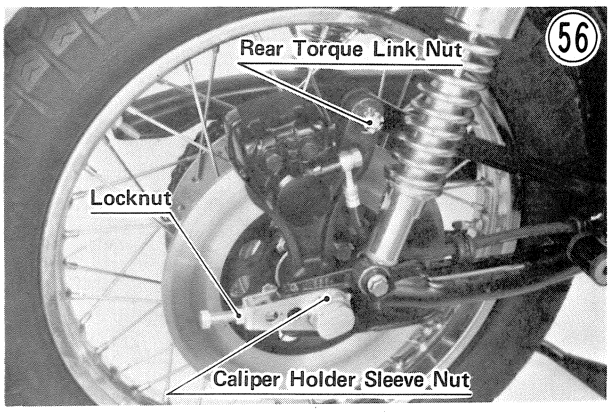

●Loosen the rear torque link nut, rear axle nut, caliper holder sleeve nut, and chain adjuster bolt locknuts, and then turn out the chain adjuster bolts in order to give the chain plenty of play. Kick the wheel forward until the chain is slack. This will facilitate removal of the engine sprocket.

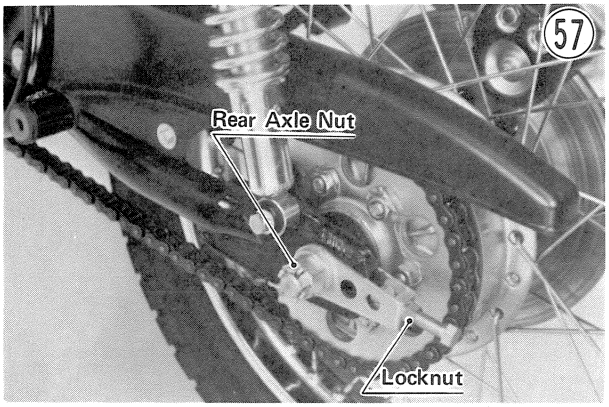

- Straighten the side of the toothed washer that is bent over the side of the engine sprocket nut.
- Hold the engine sprocket steady using the engine sprocket holder (special tool), and remove the engine sprocket nut and toothed washer. Pull off the engine sprocket from the drive chain.

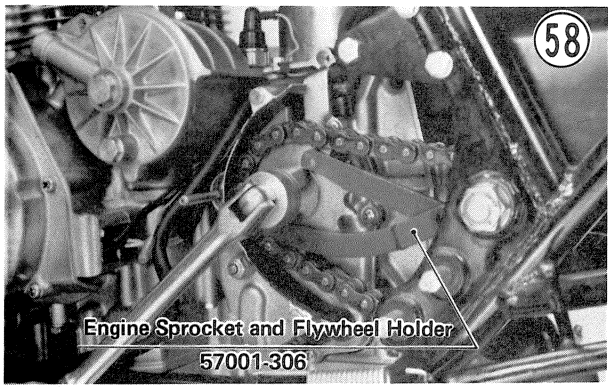

- Disconnect the blue and the red/yellow ignition coil leads.

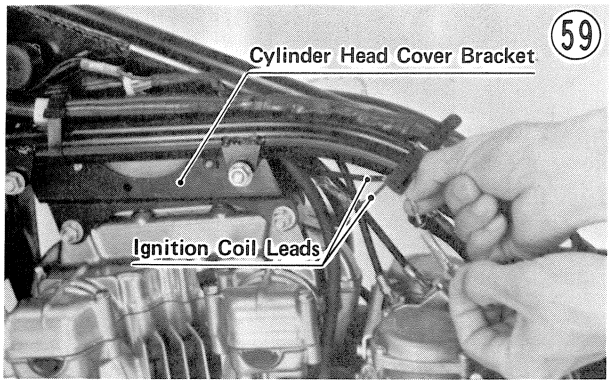

- Loosen slightly the straps which hold the blue contact breaker lead to free it from the frame.
- Remove the nuts, lock washers, and flat washers, and pull out the bolts. Remove the brackets connecting the cylinder head cover to the frame. Each bolt has another flat washer on the bolt head side and the left bracket has the ignition coil on it.
- Disconnect the field coil plug and armature plug from their sockets on the electrical panel (1976 and 1977 models).

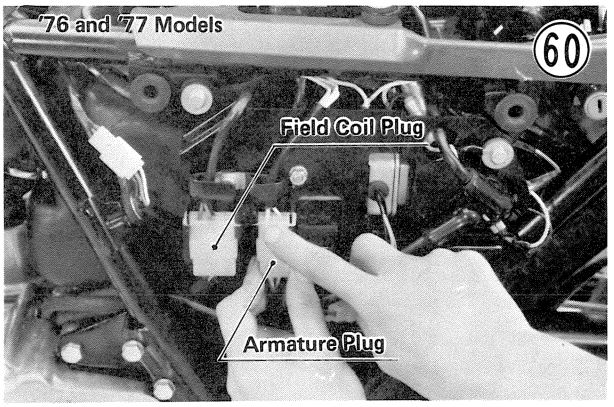

- For 1978 and later models disconnect the dynamo armature yellow leads (2) near the neutral indicator switch.
- Remove the battery band, and first disconnect the ground negarive (–) lead terminal and then the positive (+) lead terminal from the battery.

CAUTION **If the battery leads are removed in the reverse order given here and the positive (+) lead touches the frame or other ground parts while the negative (–) battery lead is still on the battery terminal, the cable could burn out and may cause fire. The battery lead removal must be begun with the negative (–) lead and it must be kept away from the battery terminal once it has been disconnected.**

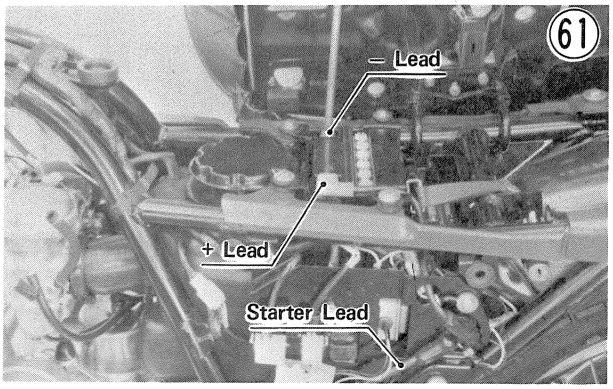

- Remove the battery from the motorcycle.
- Unbolt the battery housing mounting bolts (4). Each bolt has a lock washer and a flat washer.
- Disconnect the black/yellow leads between the air cleaner housing and the battery housing (1978 and later models).
- Remove the turn signal relay from the battery housing and complete the battery housing removal.
- Slide the rubber cap out of place, remove the nut and lock washer, and remove the starter lead from the starter relay terminal.
- Screw in fully the locknuts and adjusting nuts at the upper end of the throttle cables so as to give the cables plenty of play.

CAUTION **Removing the throttle cables from the carburetors without enough cable play, may cause throttle cable damage.**

●Loosen the carburetor holder clamp for each carburetor. Loosen the clamp that connects each air cleaner duct to its carburetor and slip it out of place.

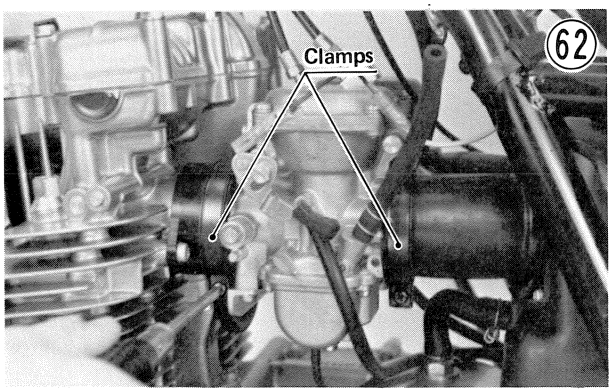

●Slip the carburetors down to the right side of the motorcycle and out.
●Loosen the throttle cable adjuster locknuts, screw the accelerator throttle cable adjuster out of its bracket, and slip the tip of its inner cable out of the pulley. Then do the same with the decelerator cable to complete carburetor removal.

CAUTION **If, when screwing out the accelerator throttle cable adjuster there becomes no cable play, screw in fully the decelerator throttle cable adjuster and then continue the accelerator throttle cable removal. This is to prevent inner cable breakage.**

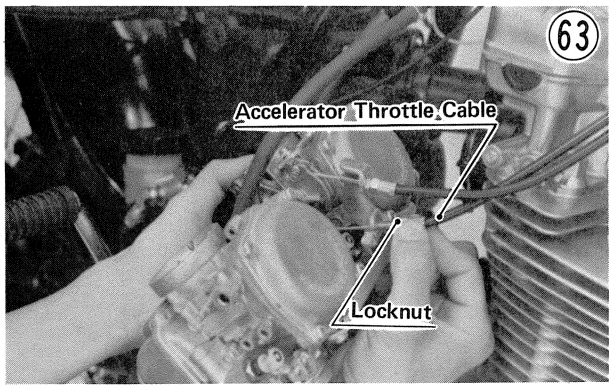

●Slide the clip out of place and remove the breather hose from the breather cover.

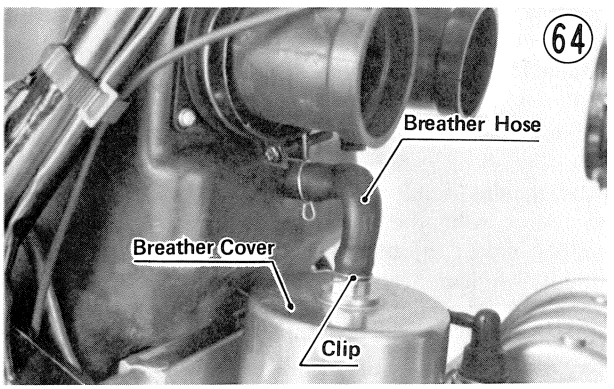

●Screw off the air cleaner cap.
●Remove the air cleaner housing mounting bolts and washers (2), and with some sort of cord, secure the air cleaner housing up into a position which will not hinder removal of the engine.

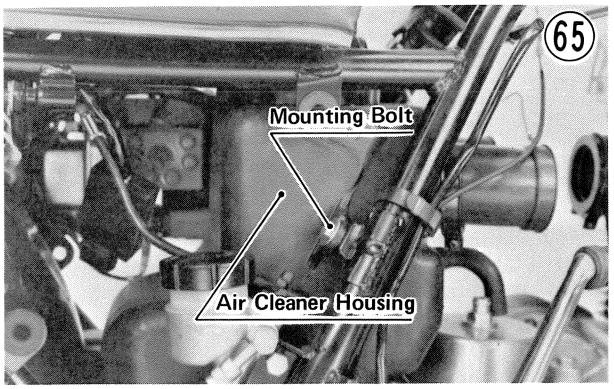

●Disconnect the rear brake light switch leads (blue and brown) and slide its leads free from the frame through the straps.

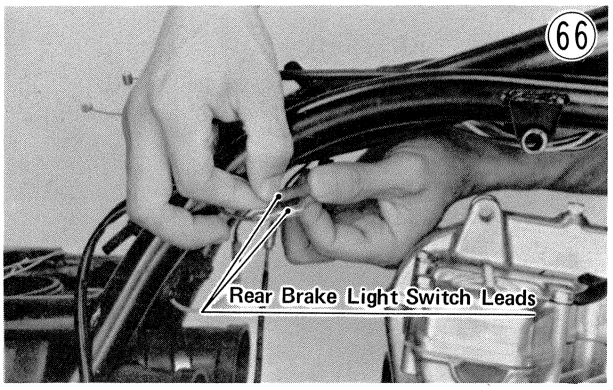

●Remove the rear brake light switch spring
●Remove the rear master cylinder mounting bolts, lock washer, and flat washers, loosen the brake pedal adjusting bolt locknut, and back out the adjusting bolt until the pedal is held down out of the way.

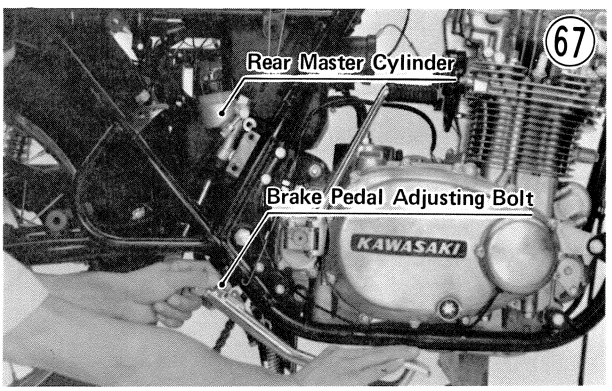

●Remove the bolt and lock washer, and remove the battery negative ground lead from the engine.

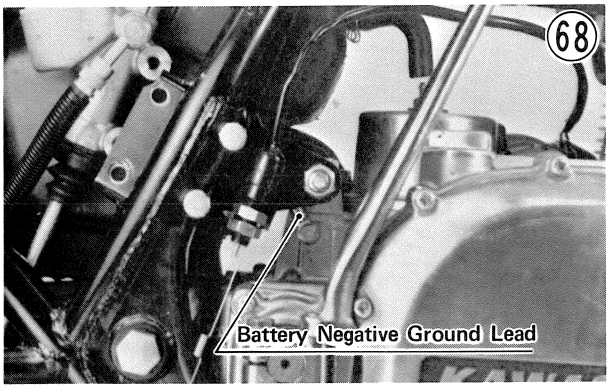

●Remove the cylinder head cover bolts (14), and take off the cylinder head cover. Two spark plug lead clamps are held in place with two cylinder head cover bolts.

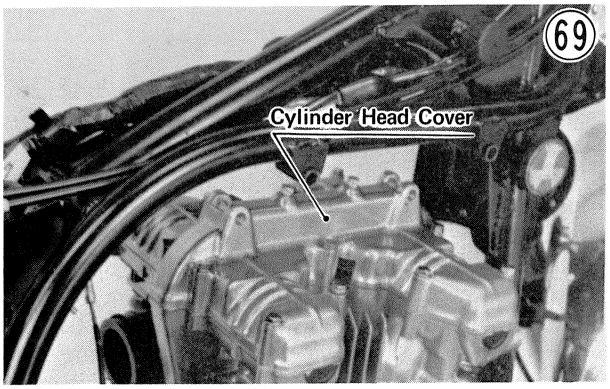

●Jack or lever the engine up slightly to take the weight off the mounting bolts.
●Remove the upper front mounting bolt ① and lock washer on each side. Each bolt has a nut plate.

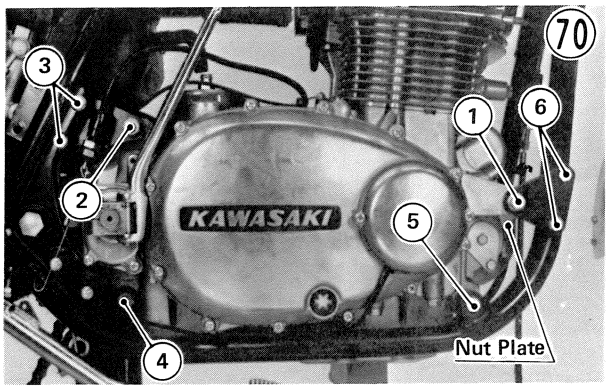

1. Front upper mounting bolt
2. Rear upper mounting bolt nut
3. Rear upper mounting bracket bolts
4. Rear lower mounting bolt nut
5. Front lower mounting bolt
6. Front upper mounting bracket bolts

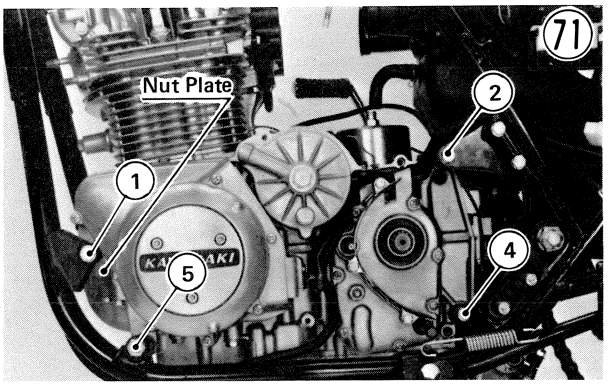

1. Front upper mounting bolt
2. Rear upper mounting bolt
4. Rear lower mounting bolt
5. Front lower mounting bolt

●Remove the rear upper mounting bolt nut ② and lock washer.
●Remove the bolts ③, ⑥ (4) and lock washers (4), and remove the rear upper and front upper mounting brackets on the right side.
●Remove the rear lower and front lower mounting bolt nuts ④, ⑤ and lock washers.
●Pull out the long engine mounting bolts ②, ④, ⑤. Be careful not to damage the threads upon removal.
●Make sure that the following cables and leads are free, and properly positioned on the engine and frame so that they will not get damaged during engine removal: starter lead, clutch cable, tachometer cable, contact breaker point lead, dynamo armature wiring, field coil wiring, throttle cables.
●Lift the engine straight up about 30 mm keeping it level, then move it to the right slightly so the rear and front of the engine slips over the lower right rear and the lower right front engine mounts.

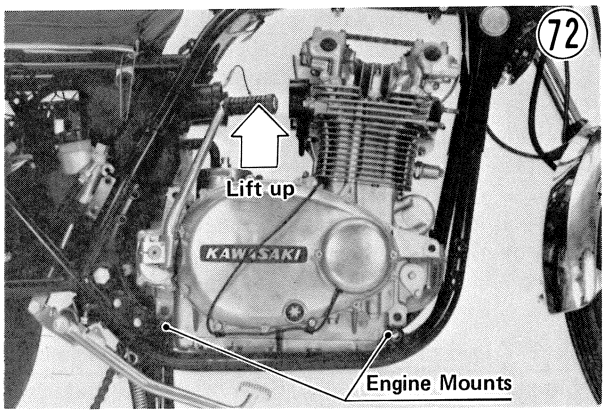

●Lift up the right side so that the oil pan at the bottom of the engine clears the frame, and pull the engine out diagonally upward to the right, taking ample care not

to damage the camshaft chain and the camshaft sprocket.

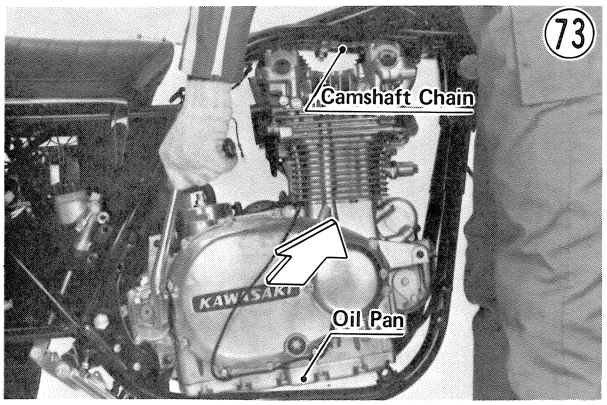

Installation:

- Place the engine into the frame the reverse of how it was removed.
- Install the rear upper and the front upper mounting brackets, and tighten four bracket bolts ③, ⑥ loosely. The rear two bolts and front two nuts have lock washers.
- Lifting the engine as necessary so that the mounting bolt threads do not get damaged, insert the five engine mounting bolts and tighten them loosely. The front upper mounting bolts ① and the other three nuts have lock washers. The rear upper engine mounting bolt ② runs through the engine mount, the long spacer, engine, short spacer, and finally through the rear upper engine mounting bracket.
- Tighten the engine mounting bracket bolts (4) to 2.0 ~ 2.8 kg-m (14.5 ~ 20.0 ft-lbs) of torque, and then tighten the engine mounting bolts (5) to the torque specified in Table 2.
- Apply a liquid gasket to the circumference of each cylinder head rubber plug, and fit them in place.
- Install the cylinder head cover with a new cylinder head cover gasket. The arrow on the cover must point towards the front. Tighten the cover bolts (14) with 1.1 ~ 1.3 kg-m (95 ~ 113 in-lbs) of torque, following the tightening sequence shown in Fig. 74. Do not forget to install the spark plug lead clamps (2) when the cylinder head cover is installed.
- Screw in the brake pedal adjusting bolt and install the rear brake master cylinder. Each master cylinder mounting bolt has a lock washer and a flat washer.
- Mount the rear brake light switch spring.
- Run the rear brake light switch leads through the straps on the frame, and connect the blue lead and the brown lead to the same color leads on the main harness side.

Cylinder Head Cover Bolt Tightening Order 74

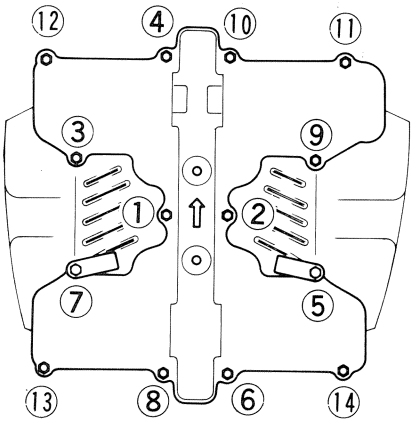

- Install the brackets connecting the cylinder head cover to the frame. Each bolt has a lock washer and flat washer. Tighten the bracket bolts on the frame side to 2.0 ~ 2.8 kg-m (14.5 ~ 20.0 ft-lbs) of torque, and the bolts on the engine side to 1.6 ~ 2.2 kg-m (11.5 ~ 16.0 ft-lbs) of torque.

NOTE: If there are spacers (2) between the brackets, tighten all the bracket bolts to 1.6 ~ 2.2 kg-m (11.5 ~ 16.0 ft-lbs) of torque.

- Connect the spark plug lead on each spark plug and insert each lead into its clamp.
- Install the battery negative ground lead on the engine right side and tighten its bolt. The bolt has a lock washer. Run the lead over the rear master cylinder.
- Run the contact breaker lead through its straps, and connect the blue contact breaker lead to the blue ignition coil lead, and connect the red/yellow ignition coil lead to the red/yellow lead.
- Install the air cleaner housing and tighten the bolts (2). Each bolt has a flat washer.

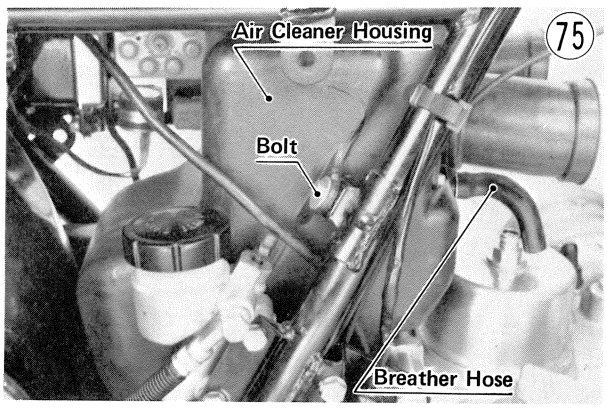

Table 2 Length and Tightening Torque of Engine Mounting Bolt

Mounting Bolt	Length	Tightening Torque
Front Upper	Left 70 mm, Right 50 mm	3.4 ~ 4.6 kg-m (25 ~ 33 ft-lbs)
Front Lower	326 mm	3.4 ~ 4.6 kg-m (25 ~ 33 ft-lbs)
Rear Upper	240 mm	3.4 ~ 4.6 kg-m (25 ~ 33 ft-lbs)
Rear Lower	160 mm	3.4 ~ 4.6 kg-m (25 ~ 33 ft-lbs)

- Fit the breather hose onto the breather cover, and slide back the clip.
- Put on the carburetor holder clamps and air cleaner duct clamps. All clamps (4) are identical.
- Fit the tip of the decelerator throttle cable into the rear catch in the pulley, and screw its adjuster down into the bracket all the way. Be sure that both throttle cables run between the frame top tube and the right side cradle tube without kinks or sharp bends, and that they do not twist around each other.

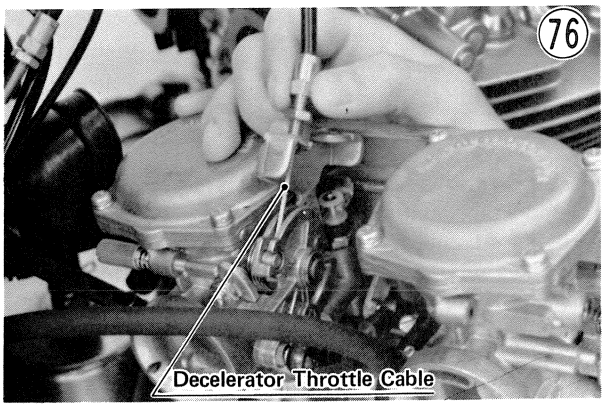

- Fit the tip of the other cable into the other catch, and lift its adjuster onto the bracket while turning the throttle grip at the same time, if necessary.
- Center each adjuster in its place in the bracket, and tighten the locknuts.
- Slip the carburetors back into place the reverse of how they were removed.
- Once the ducts and holders are all properly fitted on the carburetors, tighten all four clamps.
- Route the carburetor tubes (4) to the rear right through their rubber guide.
- Connect the black/yellow leads between the air cleaner housing and the battery housing (1978 and later models).
- Fitting the turn signal relay to the battery housing, install the battery housing.
- Before tightening the battery housing mounting bolts (4), lift up the battery negative lead into the housing, and run the starter lead above the upper engine mounting bolt spacer to the starter relay. Tighten the battery housing mounting bolts. Each bolt has a flat washer.

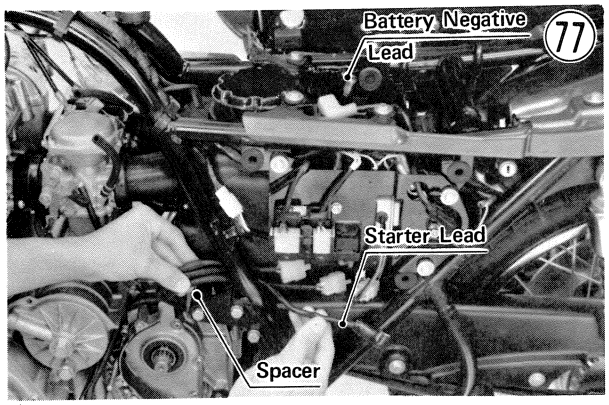

- Fit the starter lead to the starter relay terminal. After tightening the nut with 0.4~0.6 kg-m (35~52 in-lbs) of torque, slide the rubber cap back onto the relay terminal.

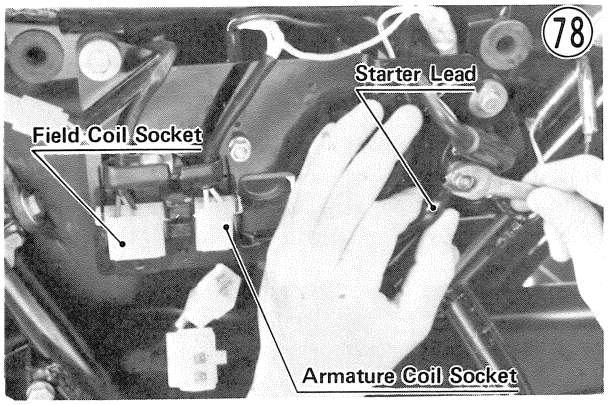

- Run the dynamo field coil wiring and the dynamo armature coil wiring above the upper engine mounting bolt spacer, and reconnect the plugs to their socket on the electrical panel.
- Install the battery and route the battery vent hose to the rear fender right side.

CAUTION

1. Route the battery vent hose as shown in the caution label. If battery gases cannot escape from this hose, the battery may explode.

2. Make sure the battery vent hose end is kept away from the chain. Electrolyte from the battery vent hose will corrode and dangerously weaken the chain.

3. Do not let the battery vent hose get folded or pinched, and route it away from the exhaust system.

- Connect first the battery positive (+) lead and then the negative (−) lead to battery terminals.

NOTE: The battery positive lead has a red insulation boot on its end.

- Install the battery band.
- Fit the drive chain back on the engine sprocket, and install the engine sprocket with the drive chain and a new toothed washer. Tighten the engine sprocket nut with 7.5~8.5 kg-m (54~61 ft-lbs) of torque while using the engine sprocket holder (special tool) to keep the sprocket steady. The toothed washer tooth goes into the sprocket hole.

NOTE: If the washer is splined and the sprocket nut is recessed; install the splined washer on the output shaft fitting their splines, and install the nut facing the recessed side toward the engine.

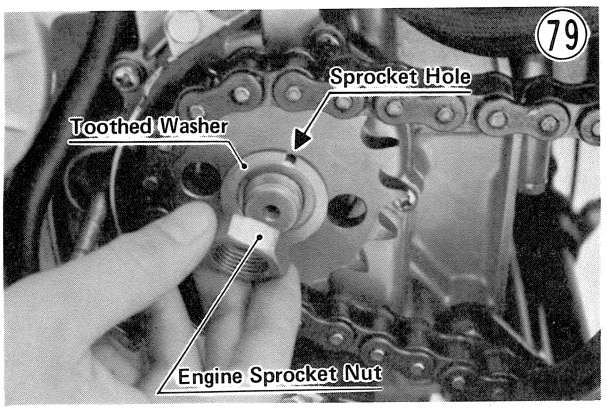

- Bend one side of the toothed washer over the side of the nut.

- Run the clutch cable into the engine sprocket cover and spring, and fit the tip of the inner cable into the clutch release lever.
- Using a new cotter pin, secure the cable tip to the release lever.
- Fit the engine sprocket cover knock pins (2).
- Install the engine sprocket cover using the shift shaft oil seal guide (special tool) to protect the oil seal in the cover, and tighten its bolts (4).

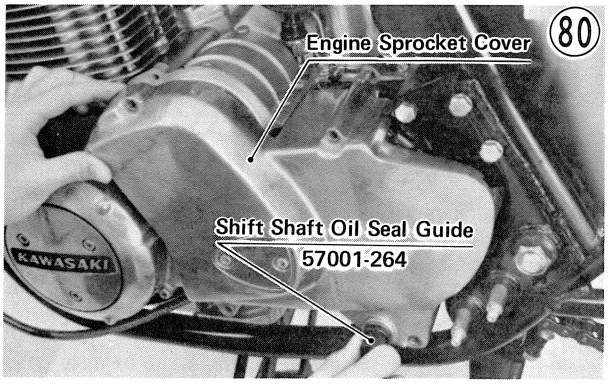

- Install the shift pedal so that its end matches the level of the engine sprocket cover lower left bolt.

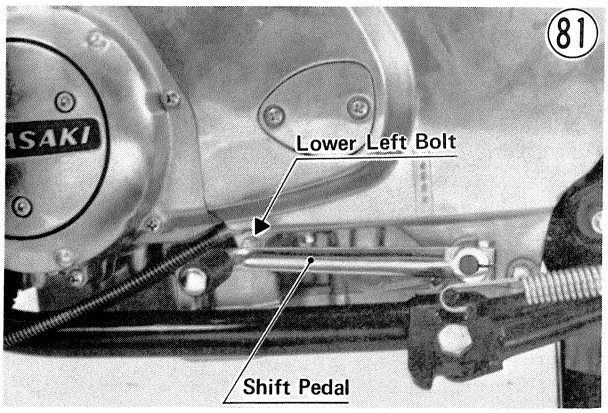

- Install the left and right foot peg with its nuts and washers.
- Fit a muffler gasket into one of the exhaust ports and place the muffler collar on the stud bolts.

NOTES:

1. Backing the muffler collar in place after fitting the end of the muffler into the exhaust port is impossible because of the frame down tube interference against the collar.
2. Swing the side stand down before installing the left muffler to prevent interference with its operation when the muffler is in place.

- **Fit the end of the muffler into the exhaust port, and attach the muffler to the frame tightening the rear foot peg nut loosely. Be sure a clutch cable guide is properly installed so that its opening rides on the left exhaust pipe.**
- Do the same with the other muffler, gasket and collar, connecting both mufflers with the connecting pipe under the engine.
- Fit each split keeper back into place, and tighten the collar nuts (4) evenly to avoid an exhaust leak. The lock washer on the nut must face the collar side.

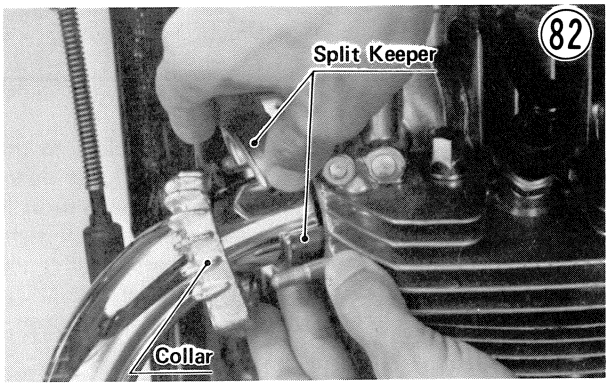

- Tighten both rear foot peg nuts securely, and then tighten the clamp bolts of the muffler connecting pipe.
- Fit the tachometer cable to the cylinder head. There is a gasket between the outer cable and the cylinder head.
- Install the fuel tank and hook its retaining band. Be sure the retaining pin is seated in the bracket hole.

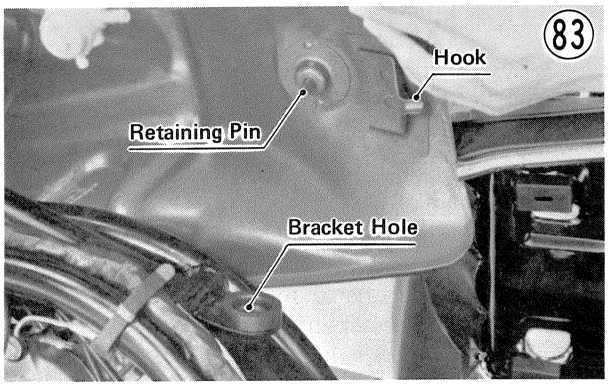

- Fit the fuel hoses back onto the fuel tap, and slide the clamp back into place.
- Push the seat back down.
- Fit the right and left side covers.
- Fill the engine with oil, check the level (Pg. 196), and add more if necessary.
- Adjust the drive chain (Pg. 17).
- Adjust the clutch (Pg. 16).
- Adjust the throttle cable (Pg. 13).
- Adjust the rear brake (Pg. 18).
- Adjust the rear brake light switch (Pg. 19).
- Adjust the camshaft chain (Pg. 11).
- Adjust the ignition timing (Pg. 9).

AIR CLEANER ELEMENT

Removal:

- Unlock the seat, and swing it open.
- Screw off the air cleaner cap.
- Pull out the element.

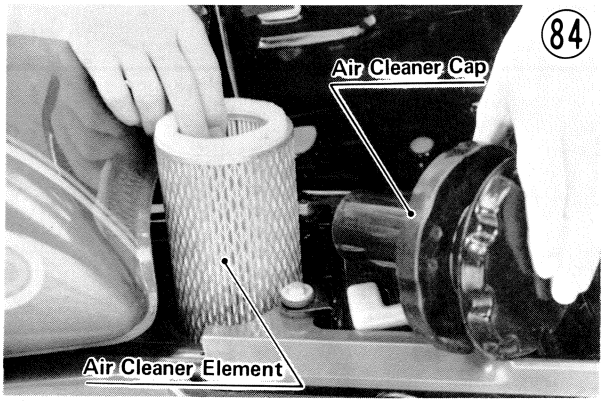

Installation

NOTE: When installing the air cleaner cap, screw the cap until a click is felt on your hand.

OIL FILTER

Removal:

- Remove the nuts (2) and washers (2) and take off the left foot peg.
- Take out the shift pedal bolt, and remove the shift pedal.
- Remove the engine sprocket cover bolts (4), and pull the cover free from the crankcase.
- Remove the oil filter drain plug and **O** ring, and drain the oil from the filter.

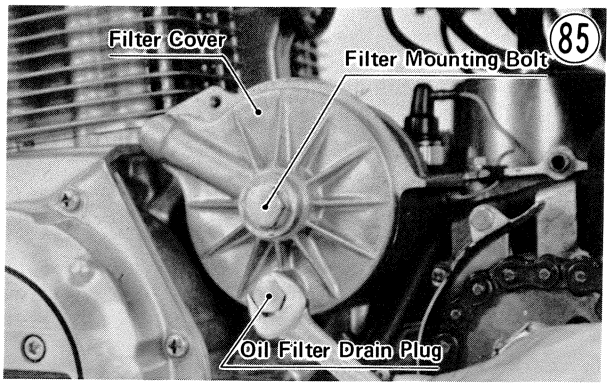

- Remove the filter mounting bolt, and pull out the filter. There is a spring seat and spring between the oil filter and the filter cover.

CAUTION **Hold the filter cover so it doesn't turn while unscrewing the filter mounting bolt. If the filter cover turns, the large O ring in the filter cover may be damaged.**

Installation:

- Remove the filter mounting bolt from the filter cover, and make sure that the **O** rings on the filter mounting bolt, drain plug, and filter cover are all properly in place. Replace the **O** ring with a new one if deteriorated or damaged.

CAUTION **Using damaged or deteriorated O rings instead of replacing them with new ones will cause oil leaks and eventually result in little or no oil left in the engine. This will cause in serious engine damage. The oil in the oil filter housing is pressurized by the engine oil pump, so these O rings must be inspected with special care. Look for discoloration (indicating the rubber has deteriorated), hardening (the sides which face the mating surfaces are flattened), score, or other damage.**

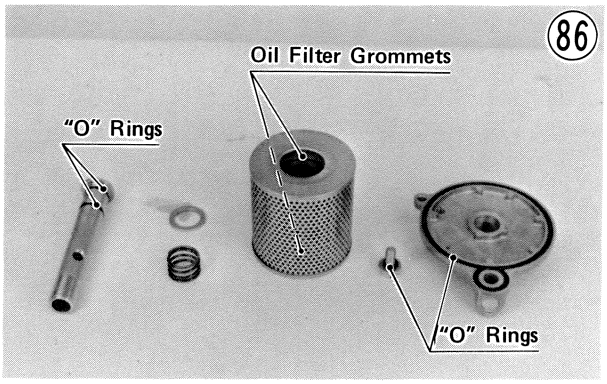

- Apply a little engine oil to the **O** rings on the filter mounting bolt, fit the filter cover on the bolt, and install the spring, spring seat.
- Apply a little engine oil on the oil filter grommets, and turn the filter mounting bolt to work the new filter into place while holding the filter steady. Be careful that the filter grommets do not slip out of place.
- Make sure the knock pin is in place, and install the oil filter tightening its bolt with 1.8 ~ 2.2 kg-m (13.0 ~ 16.0 ft-lbs) of torque.
- *Install the oil filter drain plug and tighten it with 1.6 ~ 2.0 kg-m (11.5 ~ 14.5 ft-lbs) of torque.
- Put on the engine sprocket cover using the shift shaft oil seal guide (special tool) to protect the oil seal in the cover, and tighten its bolts (4).

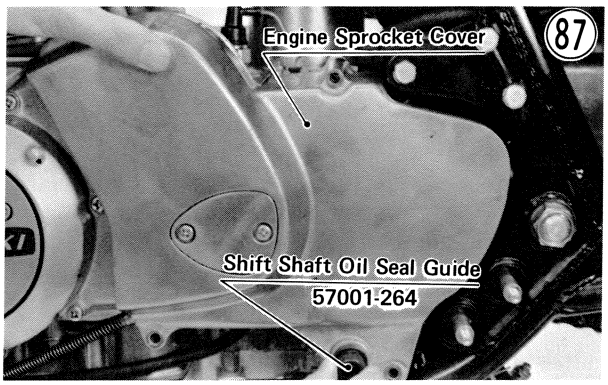

- Install the shift pedal so that its end matches the level of the engine sprocket cover lower left bolt.
- Mount the left foot peg with its nuts and washers.
- Check the oil level and add oil (Pg. 196).

MUFFLER

Removal (each muffler):

●Remove the muffler collar nuts (2), and slide the muffler collar off its cylinder head studs.

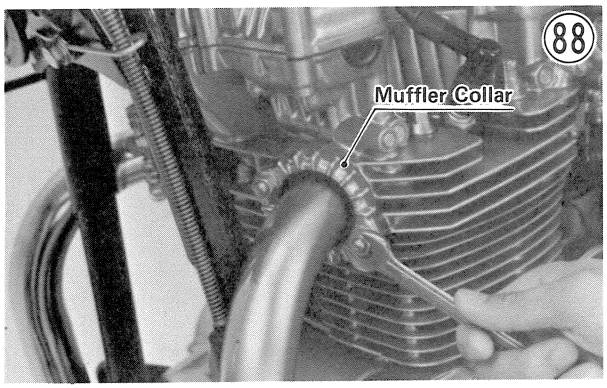

●Loosen the clamps that secures the mufflers to the muffler connecting pipe.

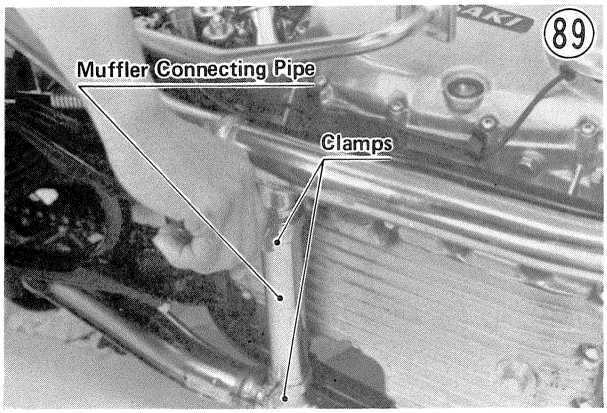

●Remove the rear foot peg to complete muffler removal. Also, remove the muffler gasket from each exhaust port.

Installation (each muffler):

●Fit the muffler gasket into the exhaust port and place the muffler collar on the stud bolts.

NOTES:

1. Backing the muffler collar in place after fitting the end of the muffler into the exhaust port is impossible because of the frame down tube interference against the collar.
2. Swing side stand down before installing the left muffler to prevent interference with its operation when the muffler is in place.

●Fit the end of the muffler into the exhaust port, and attach the muffler to the frame connecting both mufflers with the connecting pipe under the engine. Tighten the rear foot peg nut loosely. Be sure a clutch cable guide is properly installed so that its opening rides on the left exhaust pipe.

●Fit the split keeper back into place, and tighten the collar nuts (2) evenly to avoid an exhaust leak. The lock washer on the nut must face the collar side.

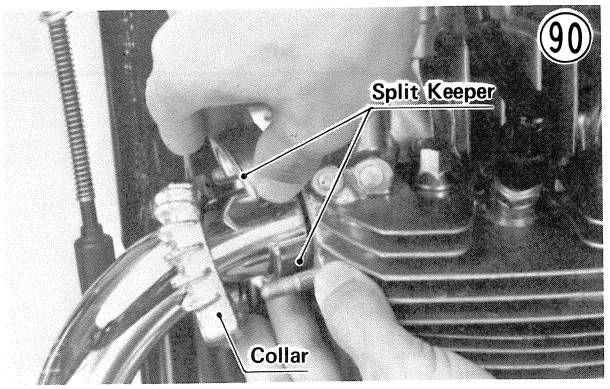

●Tighten the rear foot peg nut securely, and then tighten the clamp bolt of the muffler connecting pipe.

FUEL TANK

Removal:

●Turn the fuel tap to the "OFF" position, slide down the hose clamps, and pull the fuel hoses (2) off the tap.

●Unlock the seat, and swing it open.

●Unhook the rubber retaining band, first lift up the rear end of the tank about 30 mm, and then pull the fuel tank off towards the rear.

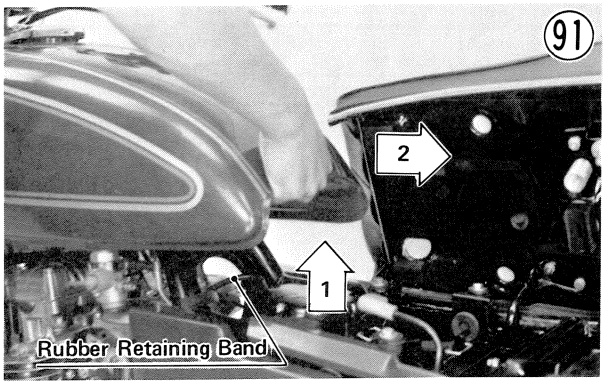

Installation:

●Put on the fuel tank, and hook its retaining band. Be sure that the retaining pin is seated in the bracket hole.

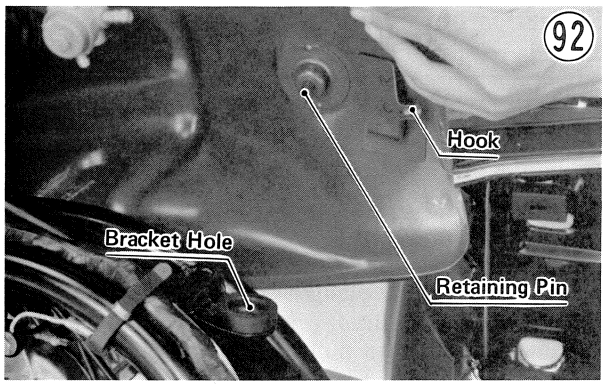

●Fit the fuel hoses back onto the fuel tap, and slide the clamps back into place.
●Push the seat back down.

CARBURETORS

Removal:

●Take off the right and left side covers.
●Turn the fuel tap lever to the "OFF" position, slide down the hose clamps (2), and pull the fuel hoses (2) off the tap.
●Screw in fully the locknuts and adjusting nuts at the upper end of the throttle cables so as to give the cables plenty of play.

CAUTION **Removing the throttle cables from the carburetors without enough cable play, may cause throttle cable damage.**

●Loosen the carburetor holder clamp and the air cleaner duct clamp for each carburetor, and slip it out of place.

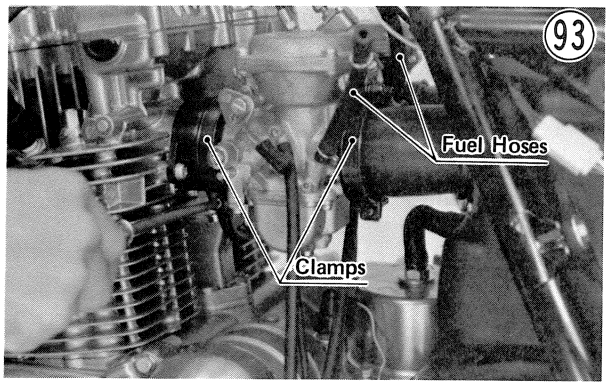

●Loosen the throttle cable adjuster locknuts, screw the accelerator throttle cable adjusters out of its bracket, and slip the tip of its inner cable out of the pulley. Then do the same with the decelerator throttle cable to complete carburetor removal.

CAUTION **If, when screwing out the accelerator throttle cable adjuster there becomes no cable play, screw in fully the decelerator throttle cable adjuster and continue the accelerator throttle cable removal. This is to prevent inner cable breakage.**

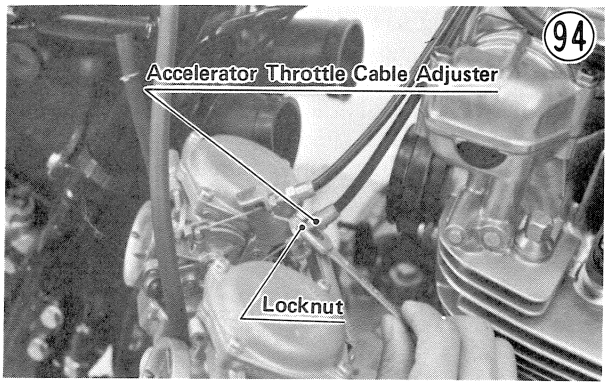

Installation:

●Fit the tip of the decelerator throttle cable into the rear catch in the pulley, and screw its adjuster down into the bracket all the way.

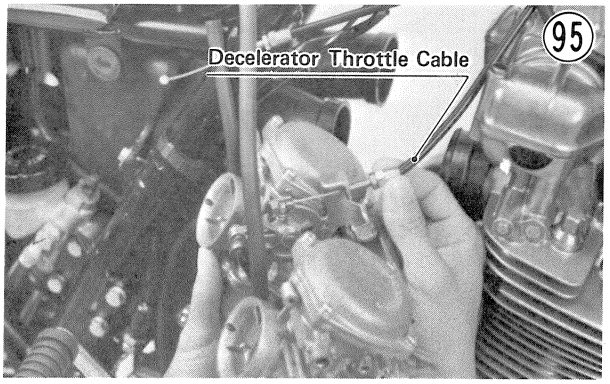

●Fit the tip of the other cable into the other catch, and lift its adjuster onto the bracket while turning the throttle grip at the same time, if necessary.
●Center each adjuster in its place in the bracket, and tighten the locknuts.

NOTE: If carburetors were separated from each other, or if only one of the carburetor mounting plates was removed, check the following; if necessary, adjust the carburetor before slipping the carburetors back into the carburetor holders.

●If the butterfly valves do not close at the same time by visual inspection, synchronize them using the following procedure:
○Back off the lever stopper screw and the idling screw so there is enough clearance to allow the butterfly valves to seat in their bores.

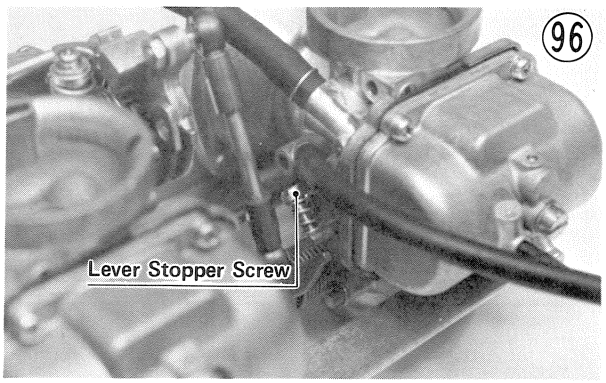

○Turn the idling screw in until the butterfly valves just begin to open and there is a slight gap between the valve and bore.
○Loosen the locknut and turn the balance adjuster screw to obtain the same gap between the butterfly valve and the bore in each carburetor.

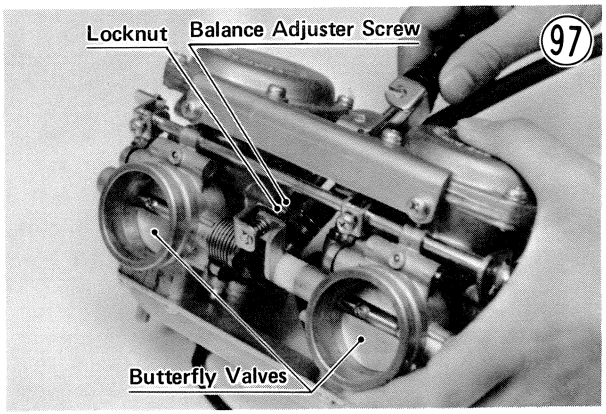

○Tighten the locknut.
○Back out the idling screw again, and turn in the lever stopper screw so that it contacts the lever just before the butterfly valves close. Idling screw position will be readjusted later.
●Slip the carburetors back into place the reverse of how they were removed.
●Once the ducts and carburetor are all properly fitted on the carburetors, tighten all four clamps.
●Route the carburetor tubes (4) to the rear right through their rubber guide.
●Fit the fuel hoses (2) back onto the fuel tap, and slide the clamps (2) back into place.
●Fit the right and left side covers.
●Adjust the throttle cables (Pg. 13).
●Adjust the carburetors (Pg. 14).

Carburetor Alignment

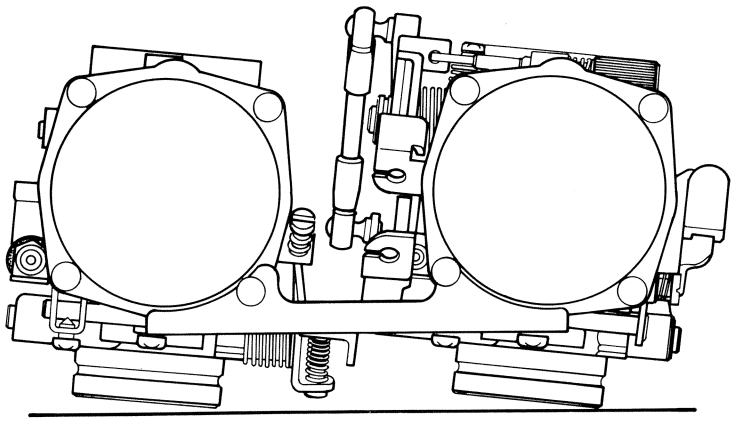

Separation of Carburetors:

NOTE: The carburetor parts listed below can be removed without separating the left and right carburetors from each other.

Main Jet	Jet Needle
Main Air Jet	Float Bowl
Pilot Air Jet	Pilot Jet
Starter Plunger (on right carb.)	Valve Seat, Valve Needle

●Unscrew the starter plunger lever screws ㉘ (2), remove the screw ㊳, spring ㊲, flat washer ㊱, and plastic washer ㉟, and then pull off the choke lever linkage shaft ㉞.
●Remove the screws and lock washers (4 ea) to take off the upper mounting plate ㉙.
●Remove the screws and lock washers (4 ea) to take off the lower mounting plate ㉔ and separate the left and right carburetors.

Assembly Notes:

1. Use a non-permanent locking agent on each mounting screws.
2. The choke lever linkage shaft should be installed last, to avoid bending the shaft.
3. To prevent binding of the throttle linkage and air leaks from carburetor holders, both the left and right carburetor bore openings must be on the same plane. That is, the centerlines of the carburetor bores must be parallel both horizontally and vertically. If they are not, loosen the mounting screws just enough so that the carburetors are able to move, align them on a flat surface, and retighten the mounting screws. Check for smooth operation of the throttle linkage, and proper alignment at the balance adjuster mechanism.

Carburetor Body Disassembly (per carburetor):

●Remove the drain plug ㉓ and copper washer ㉒, and remove the main jet ㉑.
●Remove the upper chamber cover screws (3) and lock washers (3), and take off the upper chamber cover ③ and spring ④.
●Pull out the vacuum piston ⑨ with the diaphragm ⑧.

98

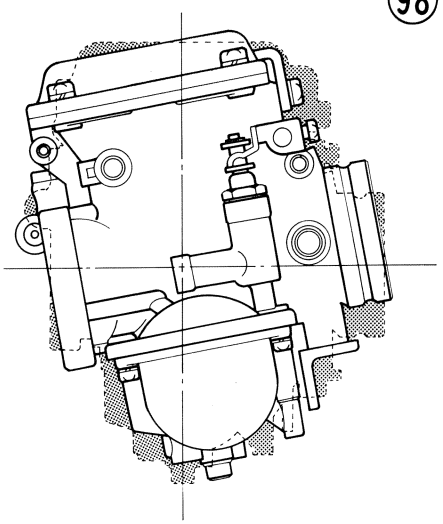

Carburetor

99

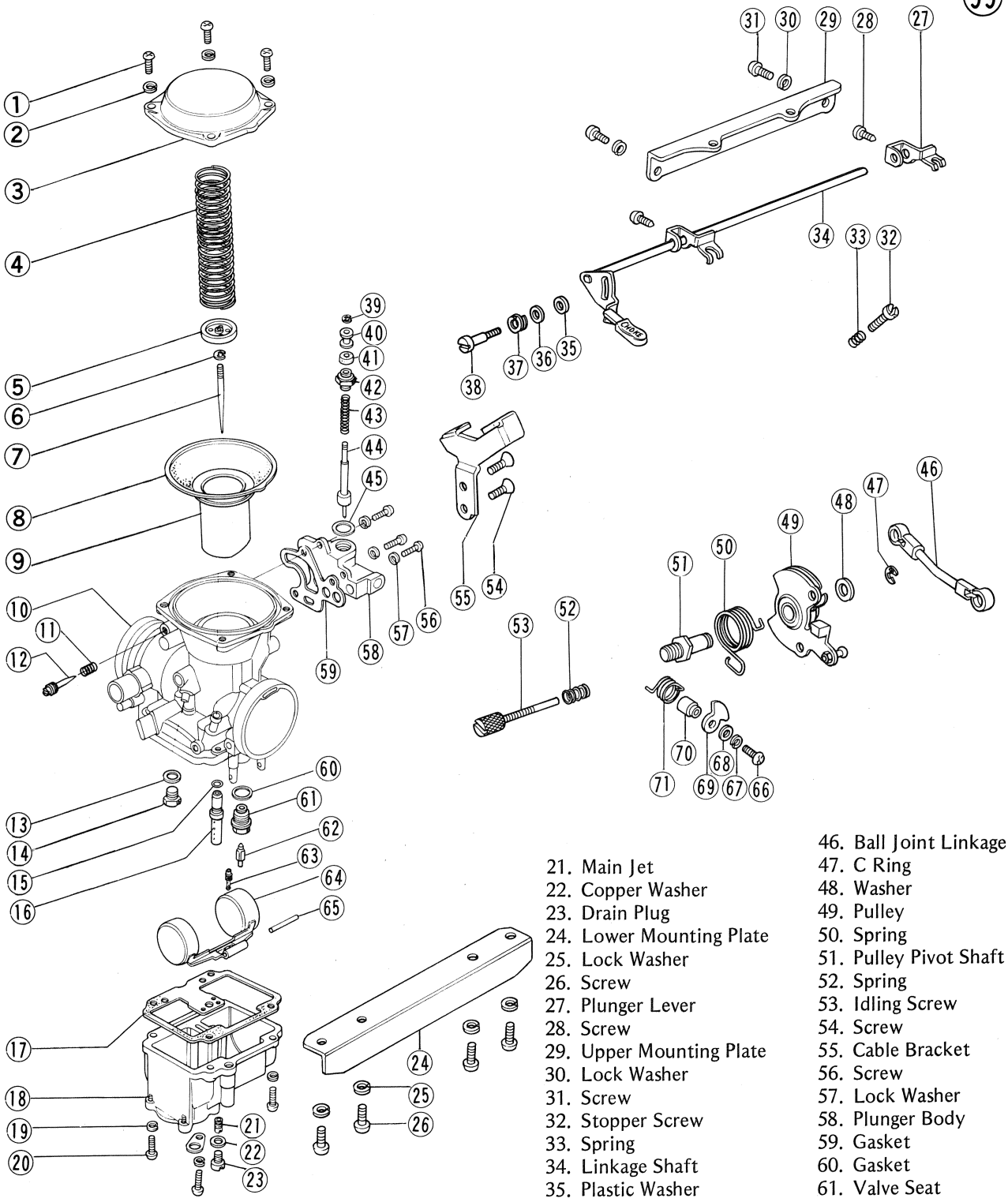

1. Screw
2. Lock Washer
3. Cover
4. Spring
5. Spring Seat
6. Clip
7. Jet Needle
8. Diaphragm
9. Vacuum Piston
10. Carburetor Body
11. Spring
12. Pilot Screw
13. Gasket
14. Plug
15. O Ring
16. Needle Jet
17. Gasket
18. Float Bowl
19. Lock Washer
20. Screw
21. Main Jet
22. Copper Washer
23. Drain Plug
24. Lower Mounting Plate
25. Lock Washer
26. Screw
27. Plunger Lever
28. Screw
29. Upper Mounting Plate
30. Lock Washer
31. Screw
32. Stopper Screw
33. Spring
34. Linkage Shaft
35. Plastic Washer
36. Flat Washer
37. Spring
38. Screw
39. Clip
40. Bush
41. Dust Seal
42. Plunger Cap
43. Spring
44. Starter Plunger
45. Gasket
46. Ball Joint Linkage
47. C Ring
48. Washer
49. Pulley
50. Spring
51. Pulley Pivot Shaft
52. Spring
53. Idling Screw
54. Screw
55. Cable Bracket
56. Screw
57. Lock Washer
58. Plunger Body
59. Gasket
60. Gasket
61. Valve Seat
62. Valve Needle
63. Pilot Jet
64. Float
65. Float Pin
66. Screw
67. Lock Washer
68. Flat Washer
69. Cam
70. Collar
71. Spring

CAUTION **During carburetor disassembly, be careful not to damage the diaphragm. Never use a sharp edge to remove the diaphragm.**

- Take out the spring seat ⑤ and jet needle ⑦.
- Remove the float bowl screws (4), and take off the float bowl ⑱, and gasket ⑰.
- Remove the pilot jet ⑬ from the float bowl.
- Push out the float pin ⑮, remove the float ⑭, and pull out the float valve needle ⑫.
- Remove the float valve seat ⑪ and gasket ⑩.
- Pull out the needle jet ⑯.
- Remove the main air jet from the left side hole marked "M" and the pilot air jet from the right side of the air intake.
- Remove the screws (3), and remove the starter plunger body ⑧, and gasket ⑨.
- Unscrew the starter plunger cap ㊷, and remove the plunger ㊹ and spring ㊸.

Assembly Notes:

1. Replace any **O** rings and gaskets if damaged or deteriorated.
2. The standard vacuum piston spring must be installed. The spring tension greatly affects the engine performance, so a damaged spring must be replaced. The standard free length of the spring is 118 mm.
3. The float must be installed in the direction shown in Fig.100.

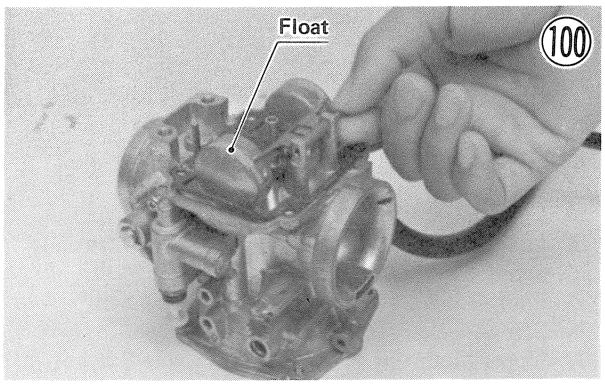

4. Assemble the upper chamber as follows:
   - ○Make sure that the jet needle clip is in the groove specified in the maintenance section (Pg. 118), and then install the jet needle into the vacuum piston.
   - ○Put on the spring seat in the vacuum piston. There is no distinction between both faces of the seat.
   - ○Insert the spring into the vacuum piston.
   - ○Fit the vacuum piston into the carburetor body, and check that the piston slides up and down without drag.
   - ○Align the diaphragm tongue with the notch in the upper chamber cover mating surface, and fit the diaphragm sealing lip into its groove.

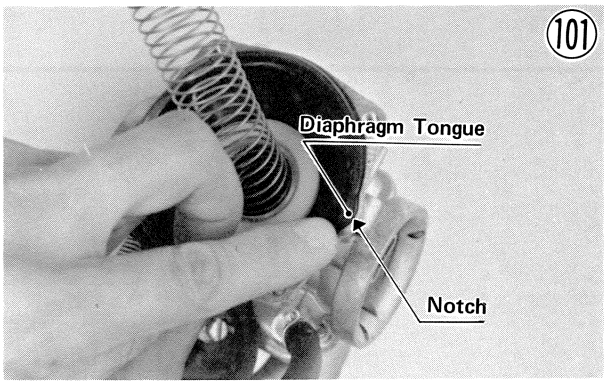

   - ○With a finger, lift the vacuum piston just enough so that there is no crease on the diaphragm, and taking care not pinch the diaphragm lip, replace the upper chamber cover. While holding the cover to keep it from being lifted by the spring, tighten the three screws. The upper chamber cover must be installed fitting its tongue with the tongue of the carburetor body.
5. To verify correct diaphragm installation, check the vacuum piston operation in the following manner. Stand the carburetor upright, and set the vacuum piston at its highest position with your finger. While holding another finger on the incoming air passage hole to block any air leak, release your finger from the vacuum piston. In correct operation, the vacuum piston drops very slowly (taking more than 10 seconds to reach the bottom). If not, the diaphragm or vacuum piston is probably damaged and should be replaced.

CAUTION **If the diaphragm is pinched, not only does the diaphragm become damaged, but the vacuum piston will not slide down to the rest position (there is a 3.5 mm space normally left between the piston lower end and the carburetor venturi). This causes idling unstability and reduces engine performance.**

Linkage Mechanism Disassembly:

- Separate the carburetors (Pg. 34).
- Remove the cable bracket screws (2), and take off the cable bracket ㊺.
- Remove the ball joint linkage ㊻.

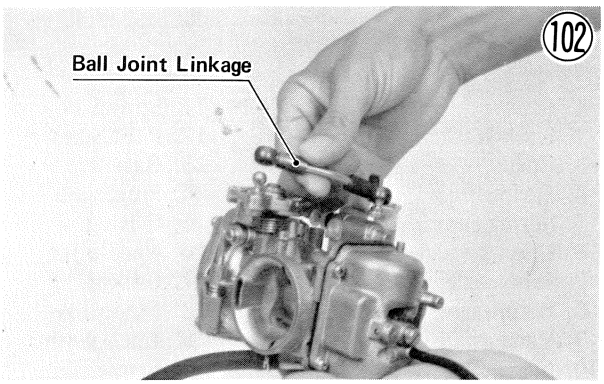

- Unscrew the idling screw ⑤③ and remove its spring ⑤② to facilitate pulley ④⑨ removal.
- Remove the screw ⑥⑥ and remove the lock washer ⑥⑦, flat washer ⑥⑧, cam ⑥⑨, collar ⑦⓪, and spring ⑦①.
- Take off the **C** ring ④⑦, and pull off the washer ④⑧, pulley ④⑨, and return spring ⑤⓪.

Linkage Mechanism Assembly Notes:

1. Apply a non-permanent locking agent to the cable bracket screws.
2. Install the ball joint linkage so that it bends downwards (Fig. 103). This is because to avoid the interference of linkage against the balance adjusting screw when the pulley is fully turned open.

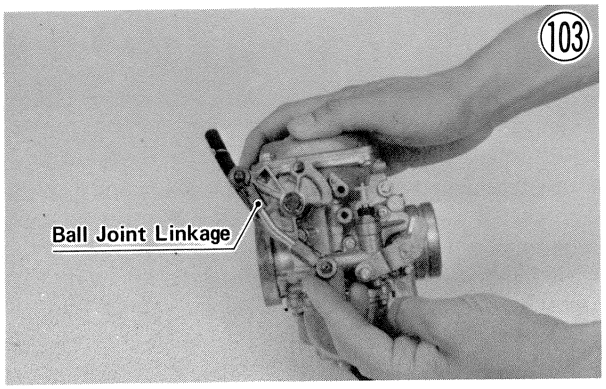

3. Install the cam and spring as shown in Fig. 104.

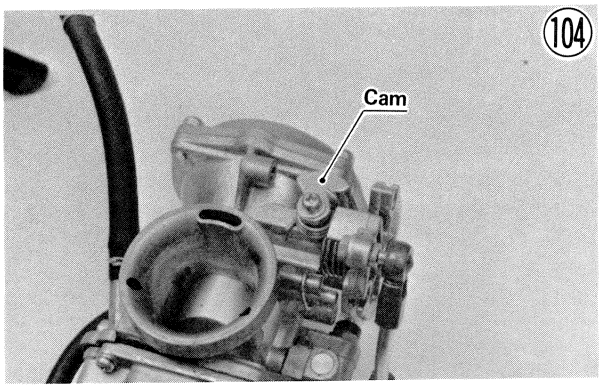

CAMSHAFT

Removal:

- Remove the fuel tank (Pg. 32).
- Remove the battery ground lead.
- Pull off the spark plug lead from each spark plug.
- Disconnect the blue contact breaker lead and yellow/red lead from the ignition coil lead.

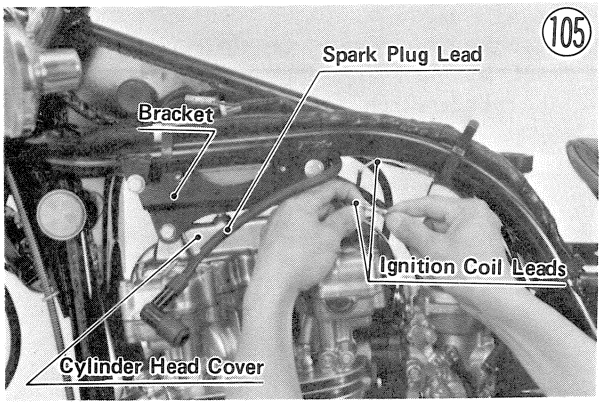

- Remove the contact breaker cover and gasket to turn the crankshaft.
- Using a 17 mm wrench on the crankshaft, set the engine at TDC by aligning the timing advancer "T" mark (the line adjoining the "T") with the timing mark.

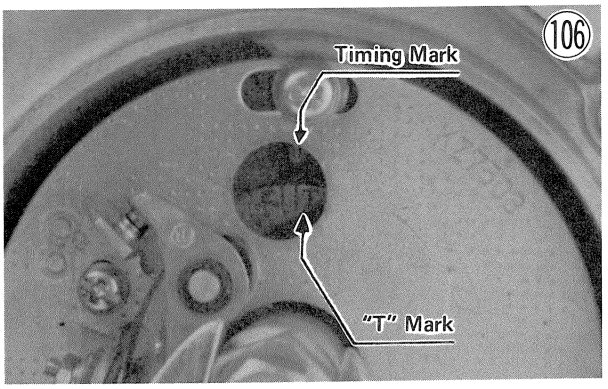

- Remove the bolts, and take off the cylinder head cover brackets (2). The left bracket has the ignition coil on it, and each bolt has a lock washer and a flat washer.
- Unscrew the tachometer cable from the cylinder head, and take out the tachometer pinion.

CAUTION **When installing the camshafts attempting to install the camshafts with the tachometer pinion left in the cylinder head may cause tachometer gear damage.**

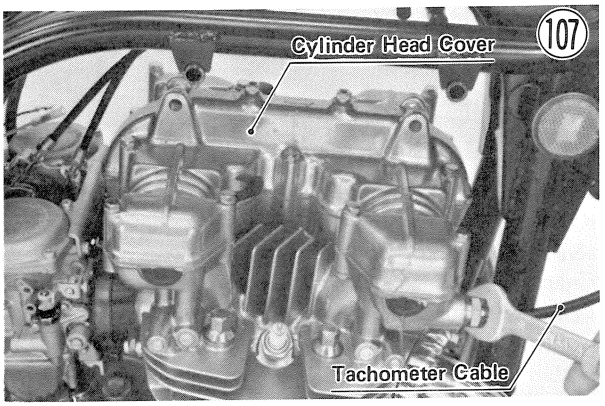

- Remove the cylinder head cover bolts (14), and slip the cover off the cylinder head.

- Remove the gasket.
- Remove the chain tensioner cap and **O** ring, loosen the locknut, and then screw the chain tensioner assembly off the cylinder block.

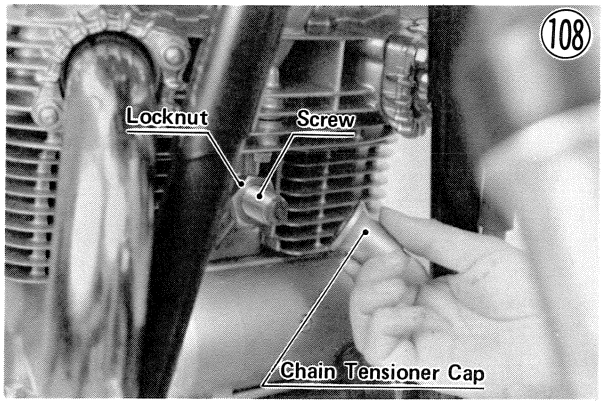

- Remove the camshaft cap bolts (16), and take off the camshaft caps (8).

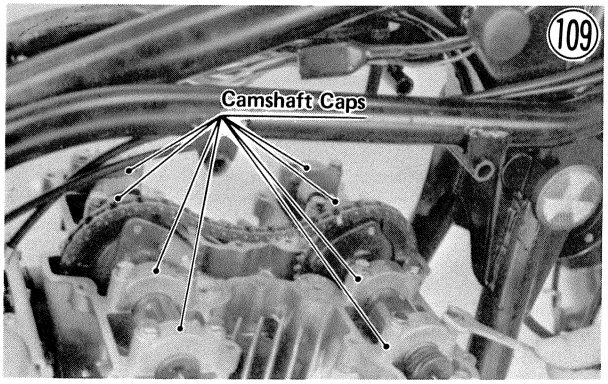

- Remove the camshafts. Use a screwdriver or wire to keep the chain from falling down into the cylinder block.

CAUTION **Always pull the camshaft chain taut during the turning of the crankshaft while the camshaft chain is loose, to avoid kinking the chain on the lower (crankshaft) sprocket. A kinked chain could damage both the chain and the sprocket.**

Installation:

NOTE: If a new camshaft, cylinder head, valve, or valve lifter were installed, check valve clearance (Pg. 12).

- Check that the tachometer pinion is removed from the cylinder head, and all camshaft cap knock pins (16) are fitted.
- Check crankshaft position to see that the engine is still at TDC, and readjust if necessary. Remember to pull the camshaft chain taut before rotating the crankshaft.
- Apply clean engine oil to all cam parts.
- Feed the inlet camshaft (no tachometer gear) through the chain and remove the screwdriver. The notched camshaft end must be on the left side of the engine.

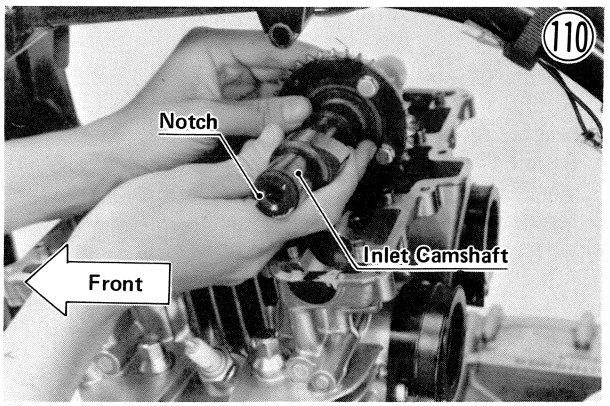

- Turn the inlet camshaft so that the arrow mark on the sprocket is aligned with the cylinder head surface and pointing to the rear.
- Pull the chain taut and fit it onto the inlet camshaft sprocket.

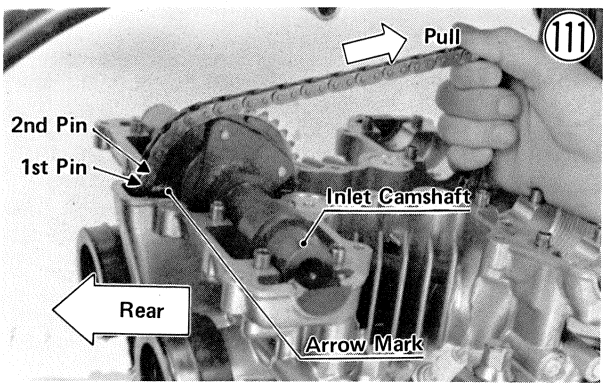

- Starting with the upper pin on the link that coincides with the inlet camshaft sprocket arrow mark, count to the 32nd pin. Feed the exhaust camshaft through the chain and align that 32nd pin with the raised arrow mark. The notch on the camshaft end must face left.

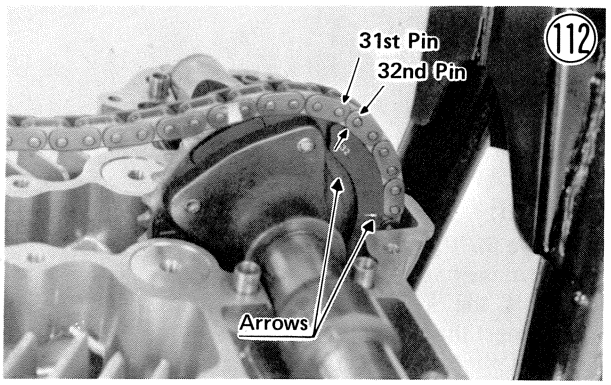

Cam Chain Timing

(113)

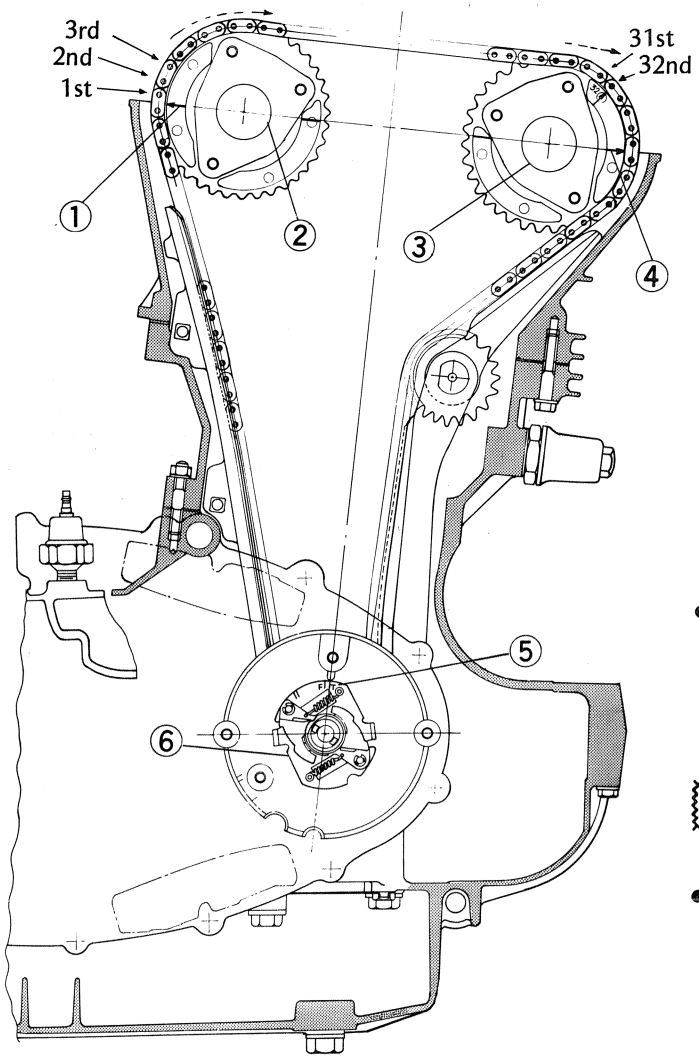

1. Arrow Mark
2. Inlet Camshaft
3. Exhaust Camshaft
4. Arrow Mark
5. TDC Mark
6. Timing Advancer

- The camshaft caps are machined together with the cylinder head, so set the camshaft caps into place with the number on the camshaft caps matching the number on the cylinder head, and with the arrow on the cap pointing forward (toward the exhaust side).

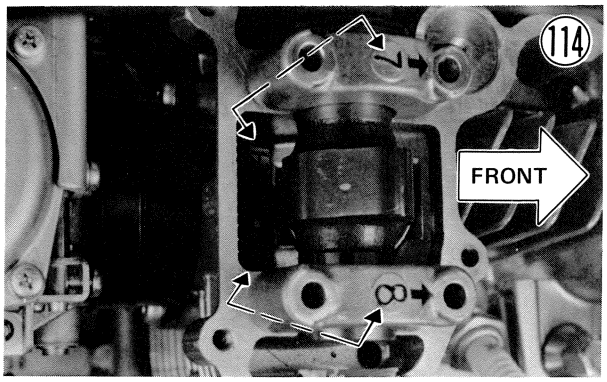

- Partially tighten the left inside camshaft cap bolts first, to seat the camshaft in place. Fully tighten all the bolts with 1.1 ~ 1.3 kg-m (95 ~ 113 in-lbs) of torque, following the tightening sequence shown in the diagram.

Camshaft Cap Tightening Order

(115)

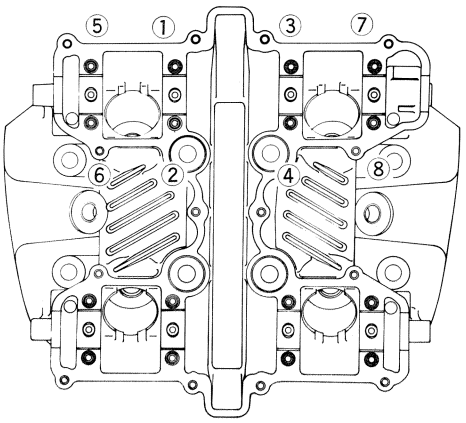

- Install the chain tensioner assembly. The sequence for '76 and '77 models is push rod, spring (long), washer, spring (short), push rod guide, aluminum washer, and locknut; for '78 and later models, spring (short), push rod, spring (long), push rod guide, aluminum washer, and locknut.

CAUTION **Do not adjust cam chain tension prior to installation of the cylinder head cover.**

- Turn the crankshaft over to align the "T" mark with the timing mark (TDC) (See Fig. 106), and check that the arrow mark on the inlet camshaft sprocket and the unnumbered arrow mark on the exhaust camshaft sprocket are aligned with the cylinder head surface, indicating that cam timing is correct.

CAUTION

1. **If any resistance is felt when turning over the crankshaft, stop immediately, and check the camshaft chain timing. Valves may be bent, if the timing was not properly set.**
2. **Do not try to turn the crankshaft and camshafts with a wrench on the camshaft sprocket. Use a 17 mm wrench on the end of the crankshaft.**

NOTE: If a new camshaft, cylinder head, valve, or valve lifter were installed, check valve clearance at this time (Pg. 12), and adjust if necessary.

- Apply a small amount of molybdenum disulfide grease for engine assembly to the tachometer pinion shaft, insert the pinion, and reconnect the cable to the cylinder head.
- Apply a liquid gasket to the circumference of each cylinder head rubber plug, and fit them in place.
- Install the cylinder head cover with a new cylinder head cover gasket. The arrow on the cover must point towards the front. Tighten the cover bolts (14) with 1.1 ~ 1.3 kg-m (95 ~ 113 in-lbs) of torque, following the tightening sequence shown in Fig. 116. Do not forget to install the spark plug lead clamps (2) when the cylinder head cover is installed.

Cylinder Head Cover Bolt Tightening Order

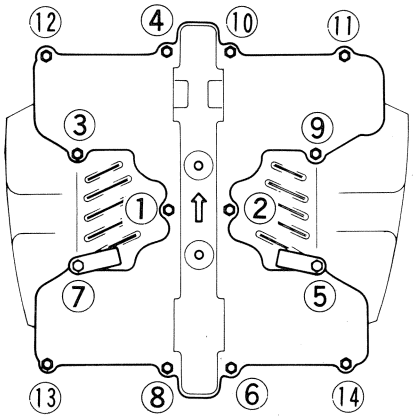

(116)

- Install the brackets connecting the cylinder head cover to the frame. Each bolt has a lock washer and flat washer. Tighten the bracket bolts on the frame side to 2.0 ~ 2.8 kg-m (14.5 ~ 20.0 ft-lbs) of torque, and the bolts on the engine side to 1.6 ~ 2.2 kg-m (11.5 ~ 16.0 ft-lbs) of torque.

NOTE: If there are spacers (2) between the brackets, tighten all the bracket bolts to 1.6 ~ 2.2 kg-m (11.5 ~ 16.0 ft-lbs) of torque.

- Connect the blue and yellow/red contact breaker leads to the same color leads which were disconnected.
- Connect the spark plug lead on each spark plug.
- Install the fuel tank (Pg. 32).
- Adjust the camshaft chain (Pg. 11) and install the cap and **O** ring.
- Install the contact breaker cover gasket and cover.

CAMSHAFT SPROCKET

Removal (on each camshaft):

- Remove the camshaft (Pg. 37).
- Remove the camshaft sprocket nuts (3), and slide the sprocket off the camshaft.

Installation:

- Set the sprocket on the camshaft aligning the bolt holes. The side marked "IN" on the inlet camshaft sprocket or "EX" on the exhaust camshaft sprocket must face away the notch on the shaft end.

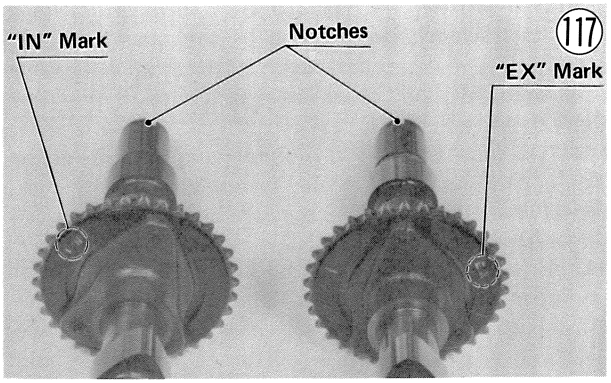

(117)

- Apply a non-permanent locking agent to sprocket bolts (3), and install bolts tightening them with 1.4 ~ 1.6 kg-m (10 ~ 11.5 ft-lbs) of torque.
- Install the camshaft (Pg. 38).

CYLINDER HEAD

Removal:

- Remove the mufflers (Pg. 32).
- Remove the carburetors (Pg. 33).
- Remove the camshafts (Pg. 37).
- Using the camshaft cap bolt, pull out the blind caps (4).

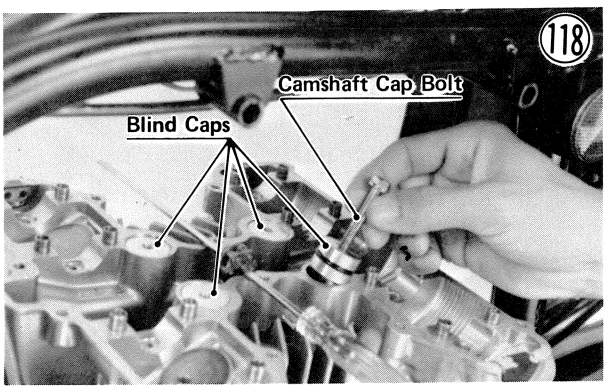

(118)

- Remove the cylinder head nuts (8) from the upper cylinder head, and bolts (3) from the bottom of the cylinder head (rear 2, front 1).
- Pull off the cylinder head, and remove the cylinder head gasket. To avoid chain guide interference with the cylinder head, lift the cylinder head up approximately 30 mm, pull the rear chain guide up slightly and slide forward, and pull the head out toward the rear taking care not to damage the camshaft chain guides.

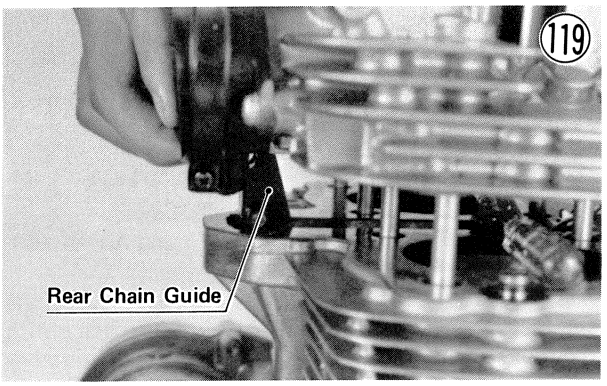

(119)

Installation:

NOTE: The camshaft caps are machined together with the cylinder head, so, if a new cylinder head is installed, use the caps that are supplied with the new head.

- Using compressed air, blow out any particles which may obstruct the oil passages and orifices. Check the **O** rings on each orifices, and replace them if deteriorated or damaged.
- Install a new cylinder head gasket. Check to see that oil passage orifices (2) are in place, that the small hole in each orifice faces up, and the head gasket face marked "TOP" is facing up.

Orifice

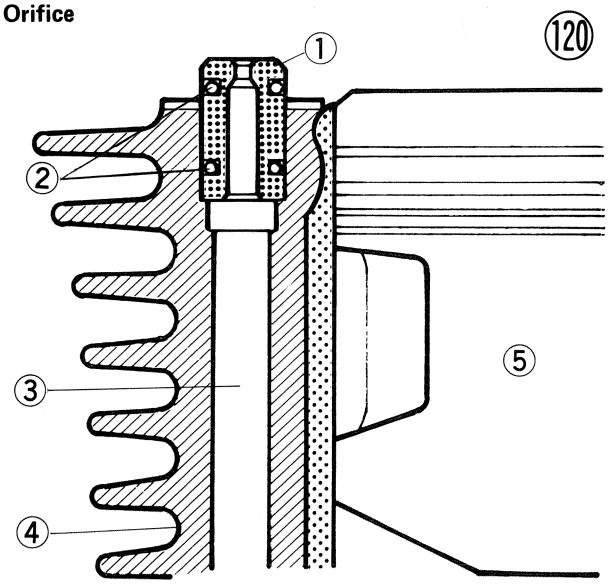

1. Orifice
2. O Rings
3. Oil Passage
4. Cylinder Block
5. Piston

- Slide the rear chain guide foward slightly to facilitate the cylinder head installation.
- Fit the cylinder head on part way, install the rear chain guide, and then install the cylinder head completely.
- Tighten the cylinder head nuts (8) with 3.8~4.2 kg-m (27 ~ 30 ft-lbs) of torque, following the tightening sequence indicated on the cylinder head. First hand tighten the nuts, then tighten them to the specified torque.

Cylinder Head Nut Tightening Order

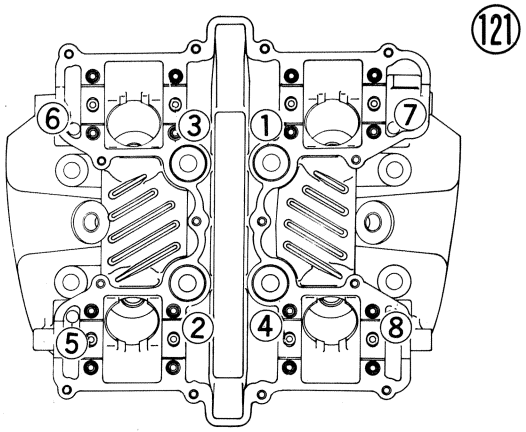

- Tighten the bolts (3) with 1.1 ~ 1.3 kg-m (95 ~ 113 in-lbs) of torque.
- Apply a little oil on the **O** rings, and fit the blind caps (4).

NOTE: Blind caps must face up towards the screw hole to facilitate later removal.

- Lift up the camshaft chain, and use a screwdriver to keep the chain from falling down into the cylinder block.
- Install the camshafts (Pg. 38).

NOTE: If a new camshaft, cylinder head, valve, or valve lifter were installed, check valve clearance (Pg. 12), and adjust if necessary.

- Install the carburetors (Pg. 33).
- Install the mufflers (Pg. 32).
- Adjust the camshaft chain (Pg. 11).
- Adjust the throttle cable play (Pg. 13).
- Check the idling and adjust the carburetors if necessary (Pg. 14).

VALVES AND VALVE GUIDES

Removal (each valve and valve guide):

- Remove the cylinder head (Pg. 40).
- Pull out the valve lifters (4) and shims (4), marking them as to location.

NOTE: If more than one valve is to be removed, mark them as to location so they can be reinstalled in the proper place.

- Using the valve spring compressor assembly (special tool) to press down the valve spring retainer ④, remove the split keeper ③.

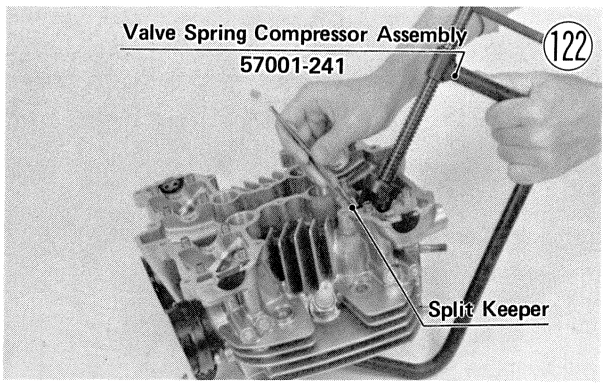

- Remove the tool, and then remove the spring retainer, outer spring ⑥, inner spring ⑤, and spring seat ⑩.
- Push out the valve ⑫ or ⑬.
- Remove the clip ⑧ and pull off the oil seal ⑦.

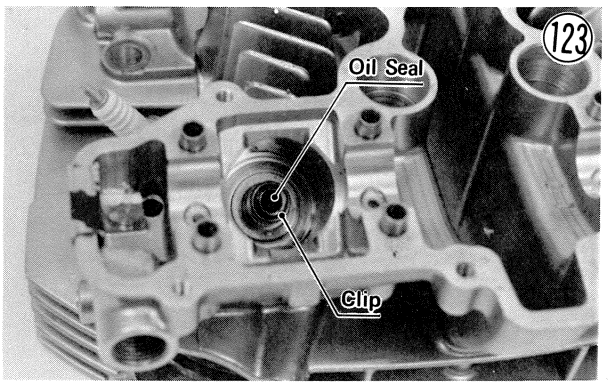

●Heat the area around the guide to about 120~150°C (248~302°F), and hammer lightly on valve guide arbor (special tool) to remove the guide from the top of the head.

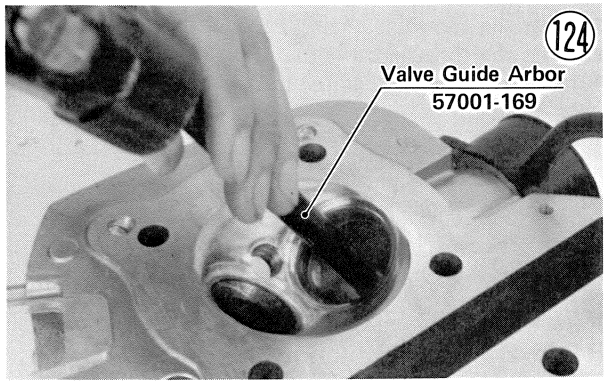

Installation (each valve and valve guide):

NOTE: If a new valve or valve guide are installed, check the valve/valve guide clearance.

●Apply oil to the valve guide, and install a new **O** ring ⑪ onto the valve guide.

●Heat the area around the valve guide hole to about 120 ~ 150°C (248 ~ 302°F), and drive the valve guide in from the top of the head using the valve guide arbor (special tool).

●Ream the valve guide with the valve guide reamer (special tool) even if the old guide is re-used.

Valve and Valve Guide

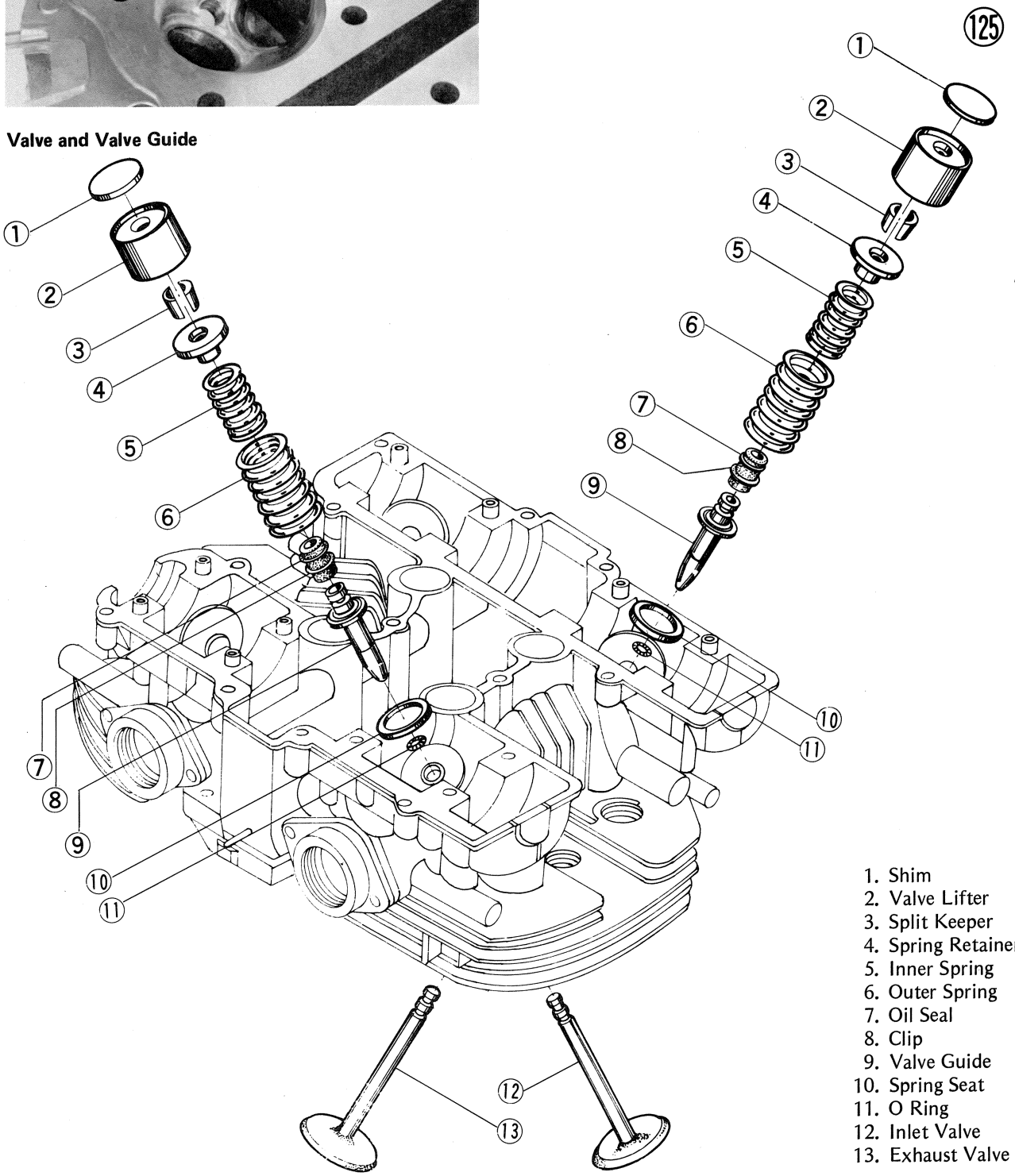

1. Shim
2. Valve Lifter
3. Split Keeper
4. Spring Retainer
5. Inner Spring
6. Outer Spring
7. Oil Seal
8. Clip
9. Valve Guide
10. Spring Seat
11. O Ring
12. Inlet Valve
13. Exhaust Valve

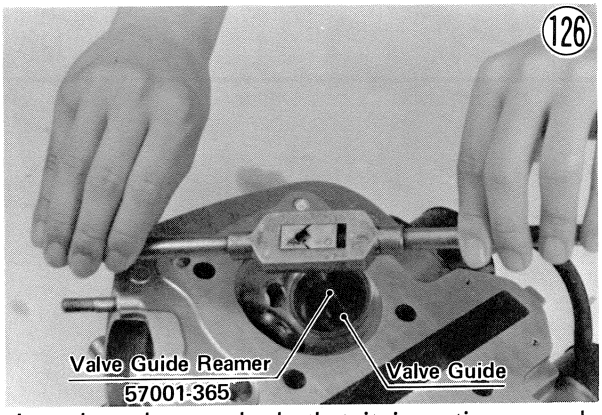

- Lap the valve to check that it is seating properly. If it is uneven, refer to the Maintenance Section (Pg. 125).
- Push a new oil seal into place, and replace its clip.
- Apply a thin coat of high temperature grease to the valve stem, insert the valve, and install the spring seat and the outer and inner springs.
- Install the spring retainer, press it down with the valve spring compressor assembly, and put on the split keeper.
- After making sure that the split keeper, spring retainer, and valve stem are all properly fitted, remove the valve spring compressor assembly.
- Mount the valve lifters and shims in their original locations.
- Install the cylinder head (Pg. 40).
- Check valve clearance (Pg. 12), and adjust if necessary.

CYLINDER BLOCK

Removal:

- Remove the cylinder head and gasket (Pg. 40).
- Remove the cylinder nut and the washer at the rear center of the cylinder block.
- With a screwdriver, pry at the gap in each side of the cylinder base to free the cylinder block from the crankcase and lift it slightly, and then lift off the cylinder with the rear chain guide.

CAUTION **Do not hammer on the screwdriver while it is in the pry point as engine damage could result (Fig. 128).**

- Wrap a clean cloth around the base of each piston so that no parts or dirt will fall into the crankcase.

Installation:

NOTE: If the cylinder block is replaced with a new one, piston to cylinder clearance must be checked against the specified value (Pg. 129).

- With compressed air, blow the oil passages to remove dirt or particles which may obstruct oil flow.

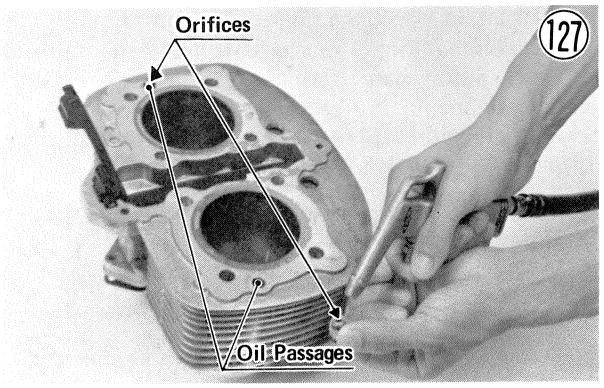

- Remove the cloth from under each piston.
- Put on the cylinder block **O** rings (2), oil passage **O** rings (2), and cylinder base gasket with new ones,

Cylinder Block Pry Point

128

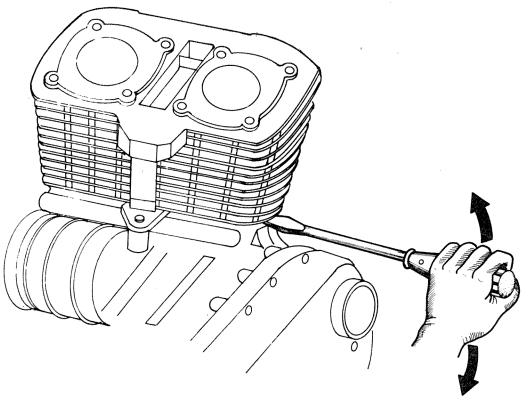

Good

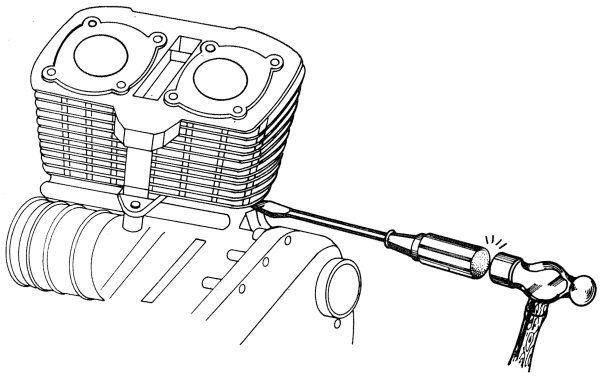

Bad

and be sure that knock pins (2) are properly fitted on the crankcase.

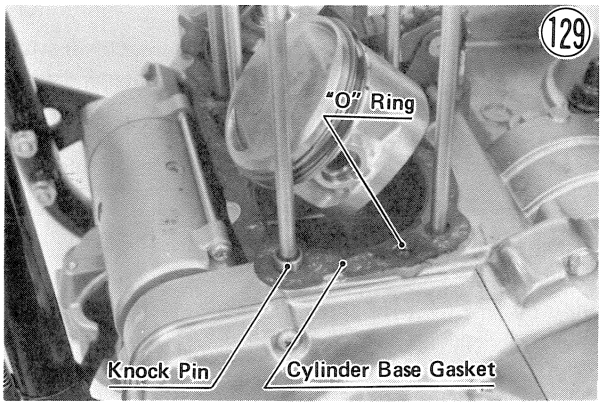

- Pull the chain taut to avoid kinking the chain, and using a 17 mm wrench on the crankshaft, turn the crankshaft to where the timing advancer "T" mark (the line adjointed the "T") aligns with the timing mark.
- Fit the piston base (special tool) into place at the crankcase opening for each piston, and gently turn the crankshaft with a 17 mm wrench until each piston is situated squarely on its piston base.

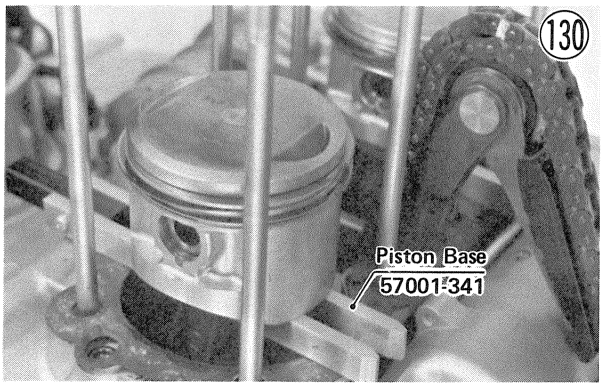

- Position each piston ring so that the opening in the top and oil ring of each piston is facing forward, and the second ring opening faces the rear.

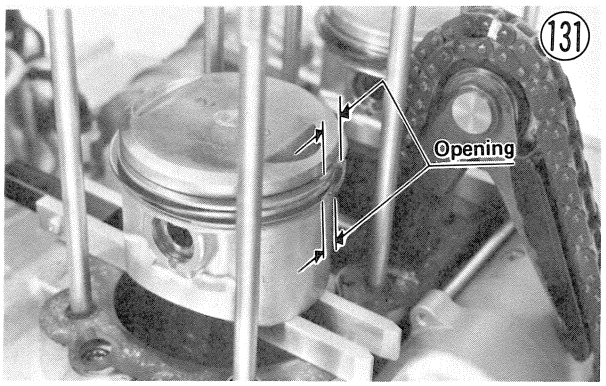

- Apply engine oil to the piston rings and the cylinder inside surfaces.
- Compress the piston rings using a piston ring compressor and adapter (special tools) on each piston.

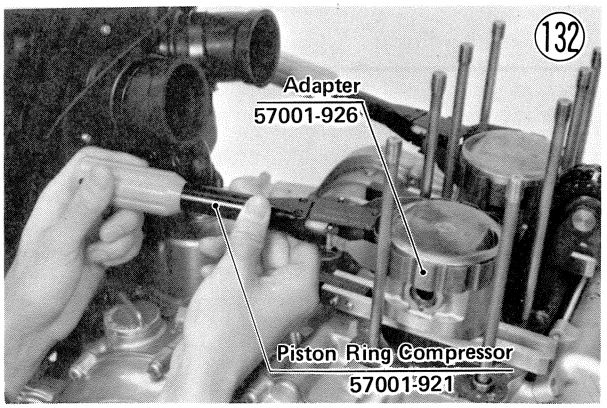

- Check that the rear camshaft chain guide is in place.
- Fit the cylinder block on the crankcase studs, guide the front camshaft chain guide inside the block, and rest the bottom of the cylinders on the piston ring compressors.
- Pull the camshaft chain up through the cylinders and insert a screwdriver through it to avoid the chain falling into the crankcase.
- Work the bottom of each cylinder past the rings, and set the cylinder block in place while removing the special tools. If the cylinder block does not seat on the crankcase, lift it up slightly, pull out the camshaft chain, and press the cylinder block down.
- Install the flat washer and nut, and after hand tightening the cylinder cap nuts (8), tighten the cylinder base nut.
- Install the cylinder head (Pg. 40).
- Adjust camshaft chain (Pg. 11).

PISTON AND PISTON RINGS

Removal:

- Remove the cylinder block (Pg. 43).
- Wrap a clean cloth around the base of each piston to secure it in position for removal and so that no parts and dirt will fall into the crankcase.
- Remove the piston pin snap rings from the outside of each piston.

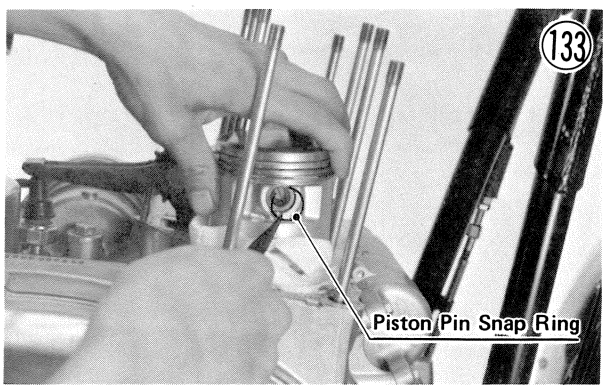

- Remove each piston by pushing its piston pin out the side that the snap ring was removed. Use the piston pin puller and adapter "C" (special tools) if necessary.

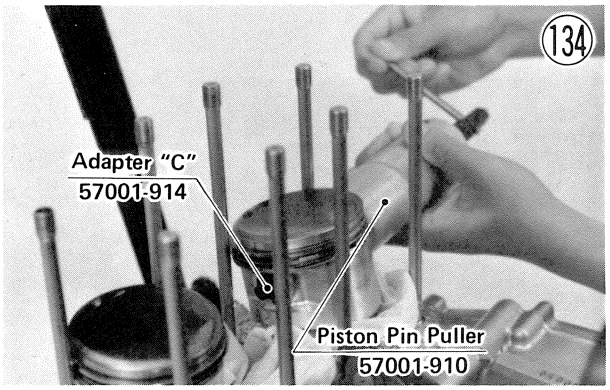

- Remove the piston rings with the piston ring pliers (special tool). To remove a ring by hand, spread the ring open with both thumbs, and then push up on the opposite side.

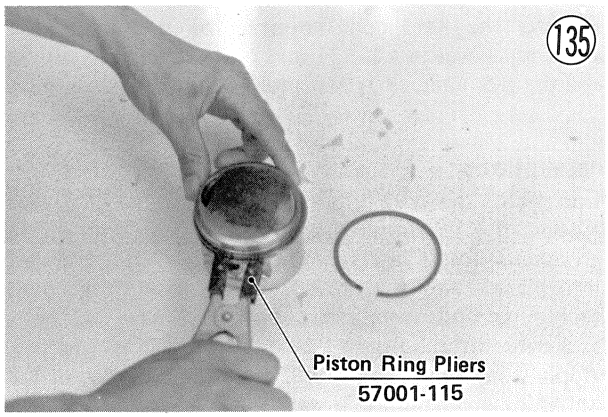

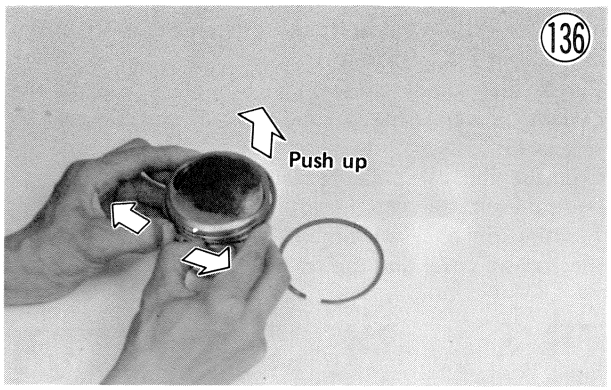

Installation:

NOTE: If the piston is replaced with a new one, check that piston to cylinder clearance and piston to pin clearance have the specified values (Pg. 129 and 131). Also, when a new pin is installed, check that piston to pin clearance and pin to small end clearance have the specified values (Pg. 131).

- Install the piston rings so that the correct side (marked "N") faces up (Fig. 137). Do not mix up the top and second rings. The outer edges of the top ring are chamfered; the lower outer edge of the second ring is notched.

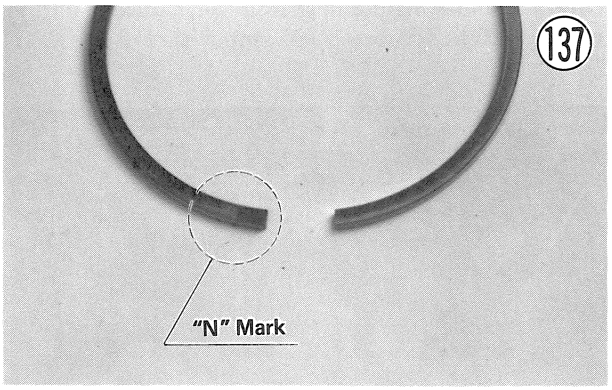

Piston Rings

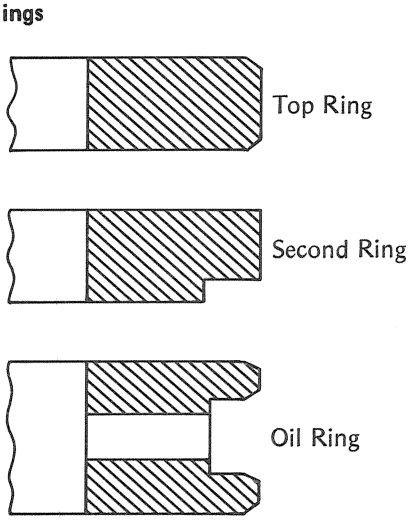

- Turn the rings so that the gap in the top ring and oil ring of each piston faces forward and the gap in the second ring faces the rear.
- Apply a little engine oil to the piston pins, and install the piston and piston pins. The arrow on the top of each piston must point towards the front.

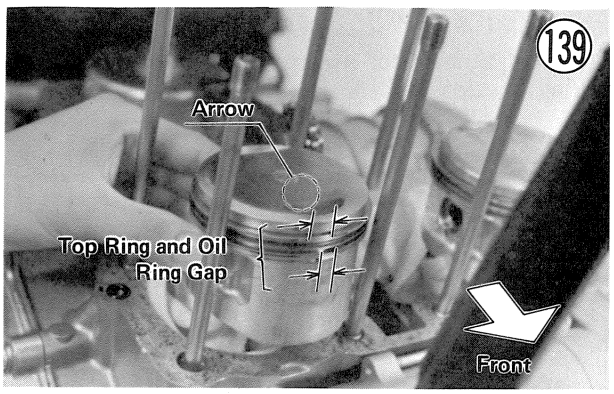

- Fit a new piston pin snap ring into the side of each piston, as removal weakens and deforms the snap ring.
- Install the cylinder block (Pg. 43).
- Adjust camshaft chain (Pg. 11).

DYNAMO FIELD COIL AND ARMATURE

Removal:

- Remove the left side cover, and disconnect the field coil plug and armature plug from their sockets on the electrical panel (1976 and 1977 models).

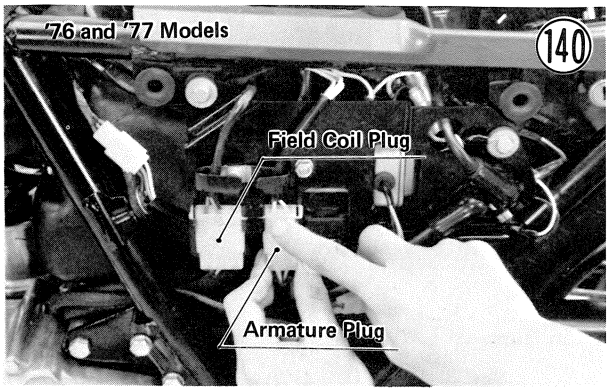

- Remove the left foot peg nuts (2), washers (2), and left foot peg.

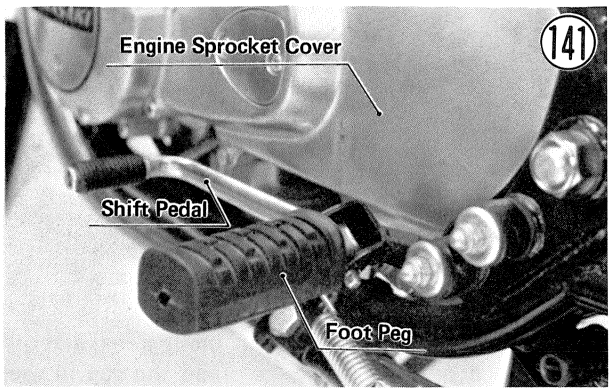

- Take out the shift pedal bolt, and remove the shift pedal.
- Remove the engine sprocket cover bolts (4), and pull the cover free from the crankcase.
- Disconnect the oil pressure indicator switch lead and the neutral indicator switch lead, and pull out the wiring towards the left side (1976 and 1977 models).

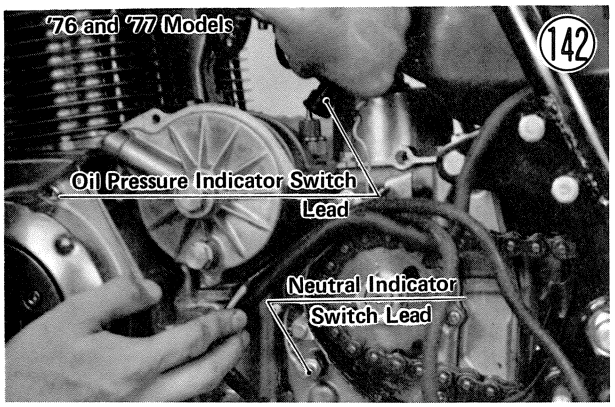

- Disconnect the dynamo armature yellow leads (2) near the neutral indicator switch (1978 and later models).
- Place an oil pan beneath the dynamo cover.
- Remove the dynamo cover screws (8), and pull off the dynamo cover and gasket.

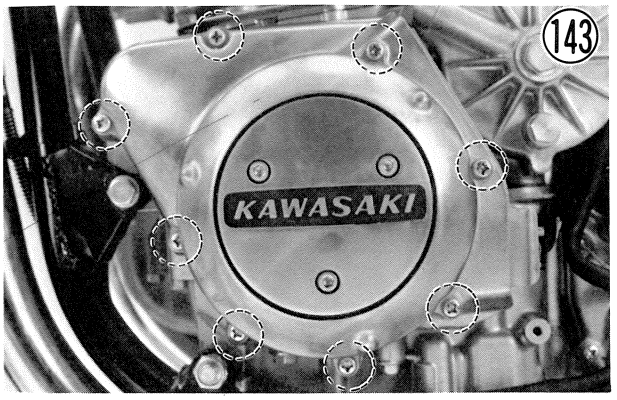

- Remove the armature Allen bolts ① (3), and pull the armature ③ and the grommet(s) ④ out from the cover.
- Remove the field coil mounting Allen bolts ⑪ (3) and copper washers ⑩ (3), and remove the field coil ⑨ and the grommets ⑧ (1976 and 1977 models).

Installation:

- For 1976 and 1977 models, apply a liquid gasket around the circumference of each field coil wiring grommets, install the grommets, and set the field coil into place. Apply a non-permenent locking agent on each Allen bolt, install the copper washer on each bolt, and tighten the bolts to 0.9~1.1 kg-m (78~95 in-lbs).
- Apply a liquid gasket around the circumference of the armature grommet(s), install the grommet(s), and fit the armature into place. Use a non-permanent locking agent on each Allen bolt, and tighten the bolts to 0.9 ~1.1 kg-m (78~95 in-lbs).
- Check that knock pins (2) are in place, replace the dynamo cover using a new gasket, and tighten its screws (8).
- Connect the oil pressure indicator switch lead and neutral indicator switch lead.
- Fit the dynamo wiring between the external shift mechanism cover and the crankcase.

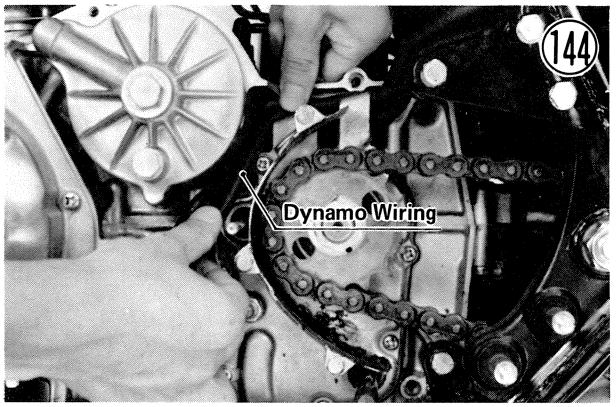

•Secure the armature yellow leads (2) and starter motor lead in the clamp near the clutch push rod (1978 and later models).

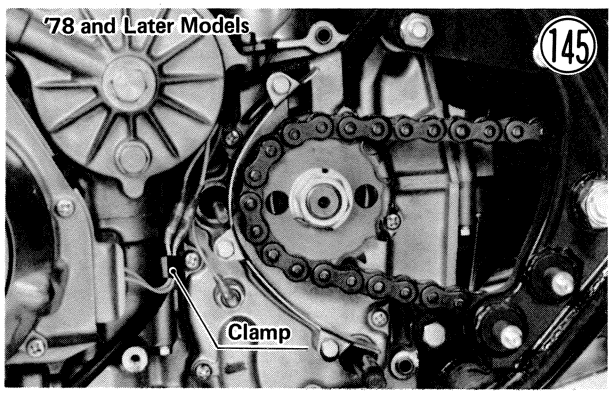

•Check that knock pins (2) are in place, and install the engine sprocket cover using the shift shaft oil seal guide (special tool) to protect the cover oil seal, and tighten it bolts (4). The wiring is routed in front of the upper mounting bolt spacer.
•Mount the shift pedal so that its end matches the level of the engine sprocket cover lower left bolt, and tighten its bolt.

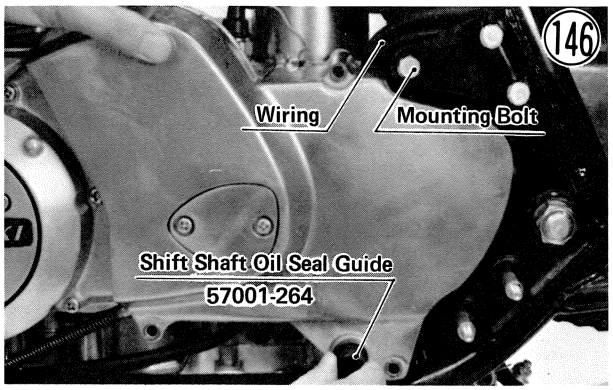

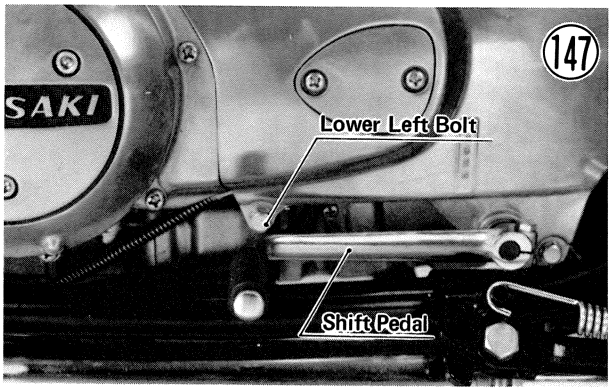

Dynamo, Starter Motor Clutch

1976 and 1977

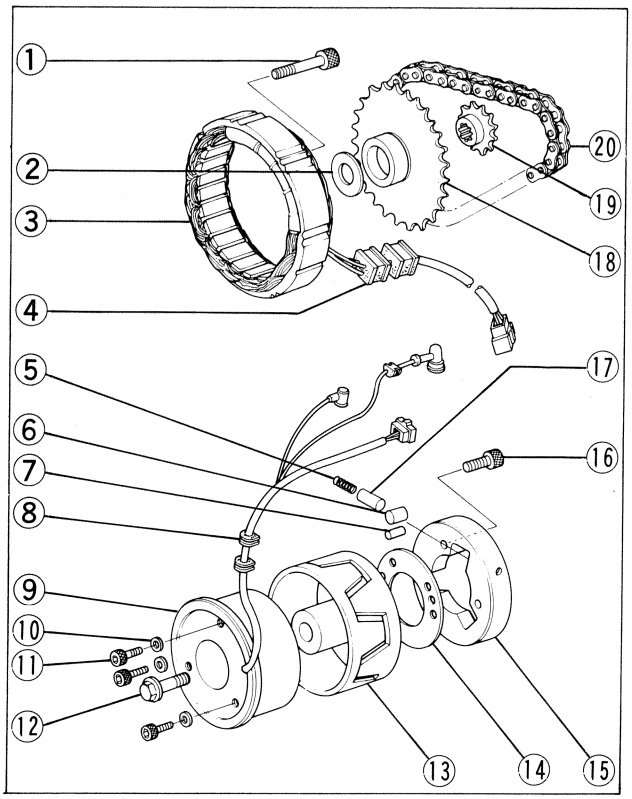

1. Armature Allen Bolt
2. Thrust Washer
3. Armature
4. Grommet
5. Spring
6. Roller
7. Knock Pin
8. Grommet
9. Field Coil
10. Copper Washer
11. Allen Bolt
12. Bolt

1978 and later

148

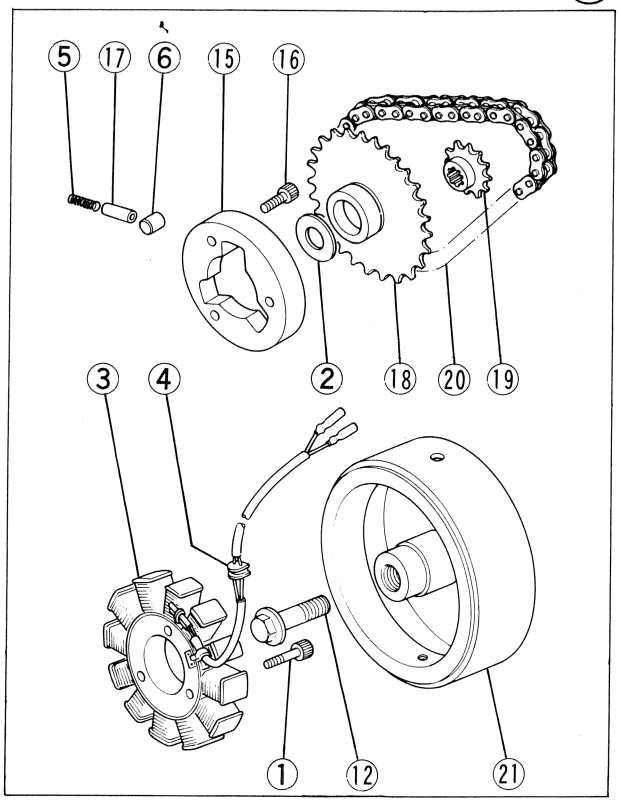

13. Dynamo Rotor
14. Plate
15. Starter Motor Clutch
16. Allen Bolt
17. Spring Cup
18. Sprocket
19. Sprocket
20. Chain
21. Dynamo Flywheel

- Mount the left foot peg with its nuts and washers (2 ea).
- Reconnect the plugs to their sockets on the electrical panel.
- Install the left side cover.
- Check the oil level and add oil (Pg. 196).

DYNAMO ROTOR (FLYWHEEL) AND STARTER MOTOR CLUTCH

Removal:

- Remove the left foot peg nuts (2), washers (2), and left foot peg.
- Take out the shift pedal bolt, and remove the shift pedal.
- Remove the engine sprocket cover bolts (4), and pull the cover free from the crankcase.
- Place an oil pan beneath the dynamo cover.
- Remove the dynamo cover screws (8), and pull off the dynamo cover and gasket.
- Hold the dynamo rotor ⑬ (flywheel ㉑) steady with the holder (special tool), and remove the bolt ⑫. The bolt is a left hand thread and must be turned clockwise for removal.

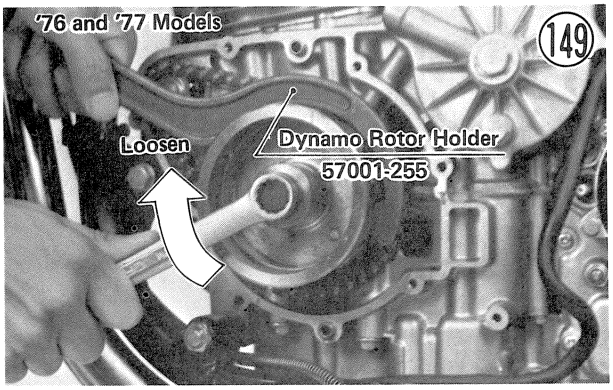

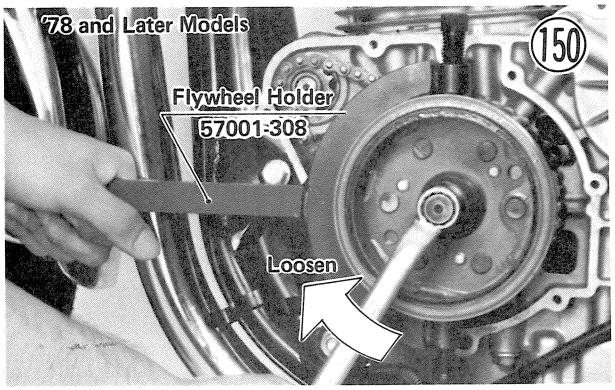

- Using the sprcial tool to hold the rotor (flywheel) steady, remove the rotor (flywheel) and starter motor clutch assembly with the dynamo rotor puller (special tool). There is a thrust washer ② at the rear of the rotor (flywheel).

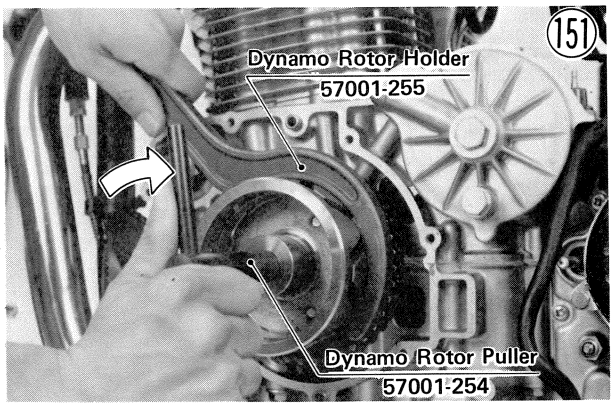

Installation:

- Check to see that the thrust washer is at the rear of the rotor; using a high flash-point solvent, clean off any oil or dirt that may be on the crankshaft taper or rotor hub, and place the assembly back on the crankshaft.
- Tighten the 10 mm bolt on 1976 and 1977 models to 7.0～8.0 kg-m (51～58 ft-lbs) of torque while holding the dynamo rotor steady with the dynamo rotor holder (special tool). For the 12 mm bolt on 1978 and later models, tighten it to 12～14 kg-m (87～101 ft-lbs) of torque.
- Check that knock pins (2) are in place.
- Apply a liquid gasket to the wiring grommets, install the dynamo cover using a new gasket, and then tighten the screws (8).
- Check to see that knock pins (2) are in place, and install the engine sprocket cover using the shift shaft oil seal guide (special tool) to protect the cover oil seal (Fig. 146), and tighten its bolts.
- Mount the shift pedal so that its end matches the level of the engine sprocket cover lower left bolt, and tighten its bolt (Fig. 147).
- Mount the left foot peg with its nuts and washers (2 ea).
- Check the oil level and add oil (Pg. 196).

Disassembly:

- Remove the rollers ⑥, springs ⑤, and spring caps ⑰ (3 ea) from the starter motor clutch.

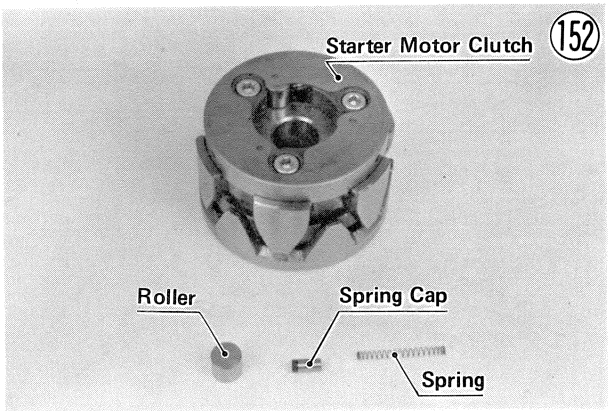

- Place the rotor face down on the workbench. Holding the rotor steady with the dynamo rotor holder (special tool), remove the Allen bolts (3) to separate the rotor and starter motor clutch. For 1978 and later models, use the flywheel holder (special tool: PN 57001-308) to hold the flywheel steady.

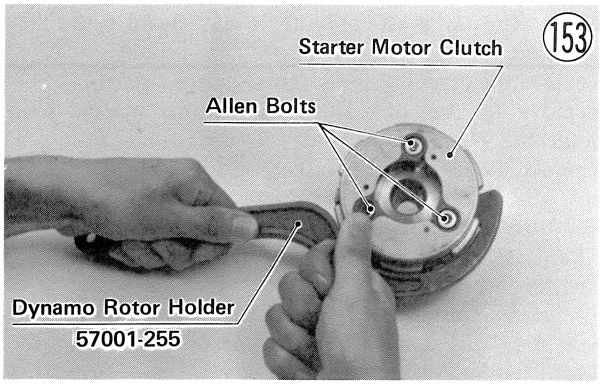

Assembly Note:

- Apply a non-permanent locking agent to the Allen bolts (3), and tighten the bolts with 3.3 ~ 3.7 kg-m (24~27 ft-lbs) of torque.

STARTER MOTOR CHAIN AND SPROCKETS

Removal:

- Remove the dynamo rotor and starter motor clutch assembly (Pg. 48).
- Pull off the starter motor chain ⑳ and sprockets ⑱, ⑲.

Installation Notes:

1. Install the starter motor sprocket, so that the protruding side of the sprocket faces in.

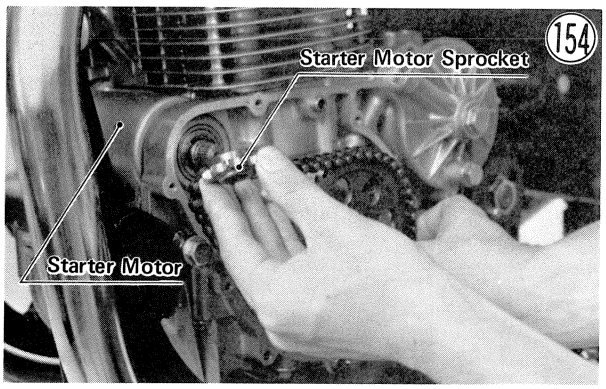

2. Install the thrust washer before installing the rotor.

STARTER MOTOR

Removal:

- Remove the left foot peg nuts (2), washers (2), and left foot peg.
- Take out the shift pedal bolt, and remove the shift pedal.
- Remove the engine sprocket cover bolts (4), and pull the cover free from the crankcase.
- Place an oil pan beneath the dynamo cover.
- Remove the dynamo cover screws (8), and pull off the dynamo cover and gasket.
- Slide out the rubber cap, remove the starter motor terminal nut and lock washer, and take the left off the motor.

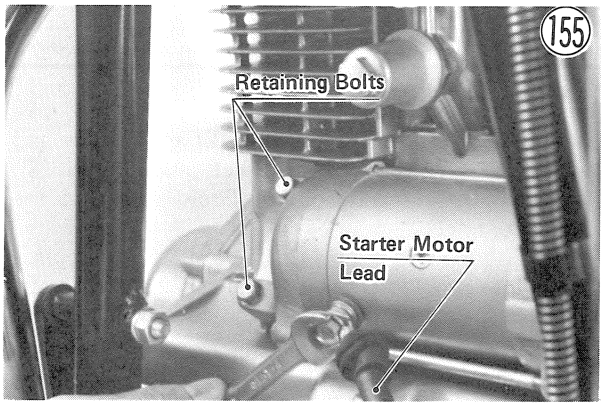

- Remove the starter motor retaining bolts (2).
- Pry the starter motor loose from the crankcase with a screwdriver and pull the starter motor off towards the right side of the engine.

CAUTION **Do not tap on the starter motor shaft. Tapping on the shaft may damage the motor.**

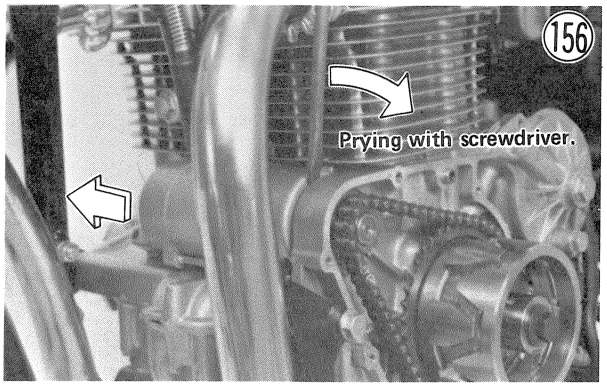

Installation:

- Replace the O ring with a new one, if it is deteriorated or damaged, and apply a little oil to it.
- Clean the starter motor lugs and crankcase where the starter motor is grounded.

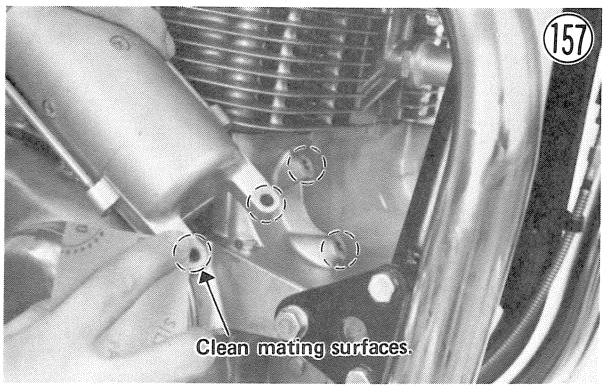

- Place the starter motor back into position fitting the shaft through the sprocket, the protruding side of the sprocket must face in (Fig. 154).
- Apply a non-permanent locking agent to the starter motor retaining bolts, and tighten the bolts with 0.9~1.1 kg-m (78~95 in-lbs) of torque.

- Reconnect the motor lead onto the terminal with its nut and lock washer. Tighten the nut with 0.4~0.6 kg-m (35~52 in-lbs) of torque.
- Reinstall the rubber cap.
- Check to see that the knock pins (2) are in place and replace the dynamo cover, gasket, and screws (8). Use a new gasket and apply a liquid gasket to the wiring grommets.
- Check that the knock pins (2) are in place and replace the engine sprocket cover using the shift shaft oil seal guide (special tool) to protect the cover oil seal, and tighten its bolts (4).
- Mount the shift pedal so that its end matches the level of the engine sprocket cover lower left bolt, and tighten its bolt.
- Mount the left foot peg with its nuts and washers (2 ea).
- Check the oil level and add oil (Pg. 196).

Disassembly:

- Remove the screws ㉕ (2), lock washers (2), and remove the end covers ①, ㉓.
- Remove the end plate ⑬, gasket ⑫, thrust washers ⑪ and armature ⑩ from the shaft side.
- Remove the screw which connects the brush lead ⑤ to the field coil lead ⑦, and remove the brush plate ⑥. The screw has a lock washer. There is a **O** ring ② at the brush side of the housing.

NOTE: The yoke assembly ⑧ is not meant to be disassembled.

- Remove the planet pinions ⑭ and internal gear ⑰.
- Remove the key ㉒, and pull off the internal gear holder ⑱.
- Remove the large thrust washer ⑲.

Assembly Notes:

1. Replace any **O** rings that are deteriorated or damaged with new ones.
2. Align the notch on the end plate with the tongue on the housing, and align the line on each end cover with its line on the housing.

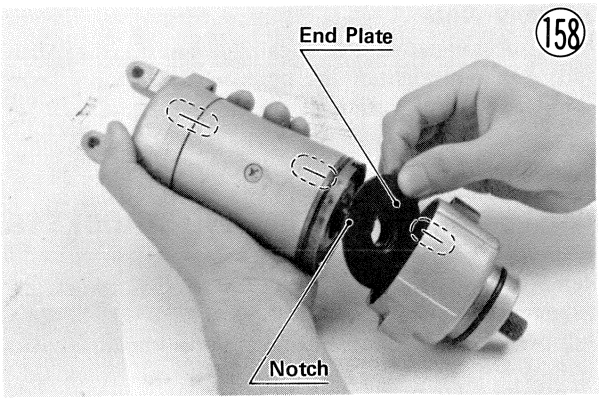

Starter Motor

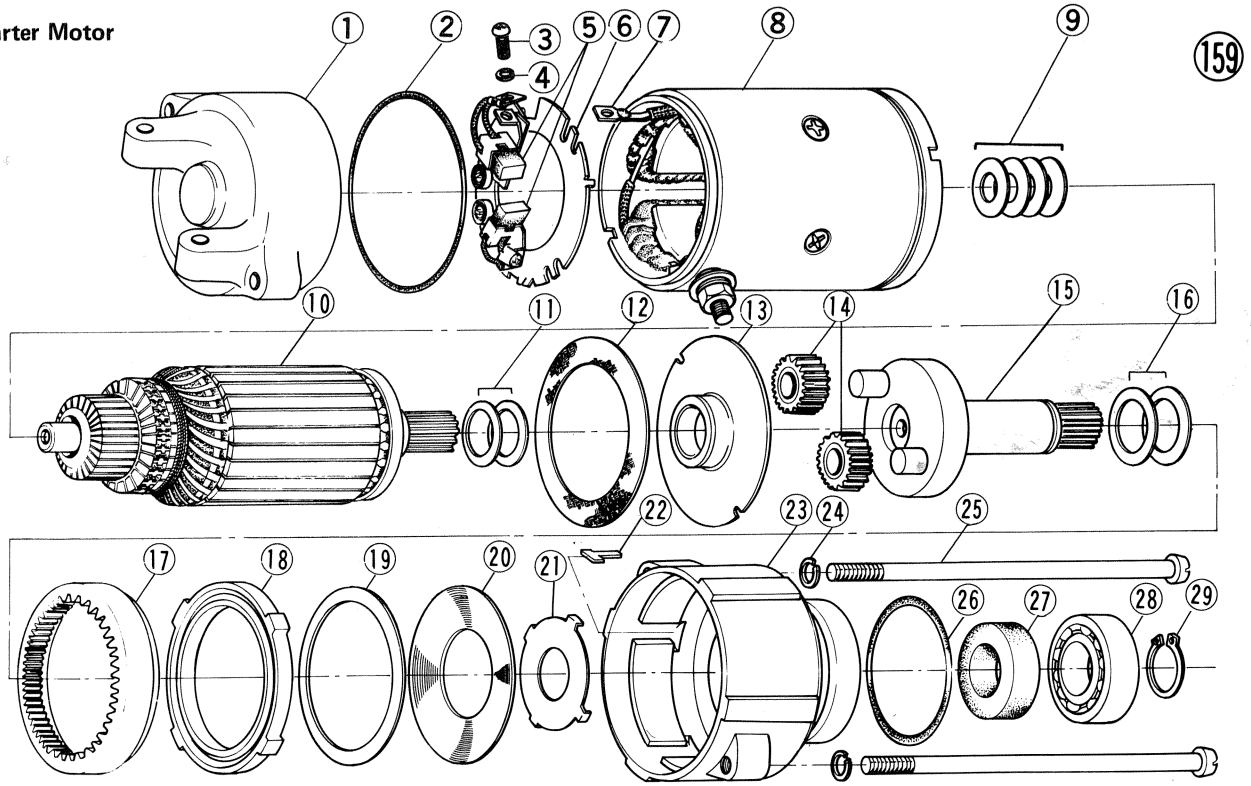

1. End Cover
2. O Ring
3. Screw
4. Lock Washer
5. Carbon Brushes
6. Brush Plate
7. Field Coil Lead
8. Yoke Assembly
9. Thrust Washers
10. Armature
11. Thrust Washers
12. Gasket
13. End Plate
14. Planet Pinions
15. Output Shaft
16. Thrust Washers
17. Internal Gear
18. Internal Gear Holder
19. Large Thrust Washer
20. Spring
21. Toothed Washer
22. Key
23. End Cover
24. Lock Washer
25. Screw
26. O Ring
27. Grease Seal
28. Ball Bearing
29. Circlip

3. Apply a high temperature grease to the planet pinions ⑭, internal gear ⑰, and internal gear holder ⑱.

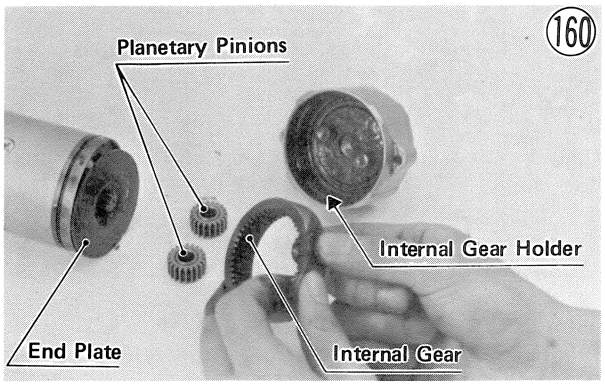

IGNITION COIL

Removal:

- Remove the fuel tank (Pg. 32).
- Pull off the lead from each spark plug.
- Disconnect the blue and the red/yellow ignition coil leads.

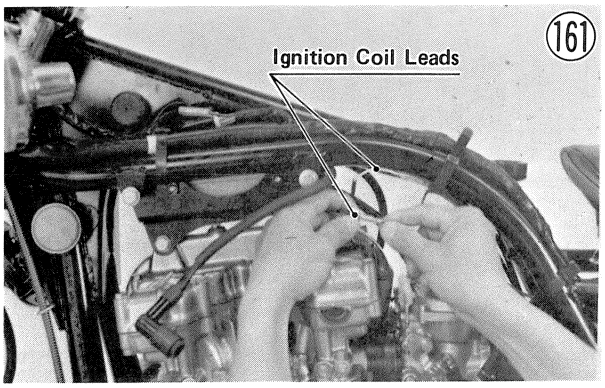

- Remove the bolts (4) from the bracket (on the right side) that connecting the cylinder head cover to the frame.

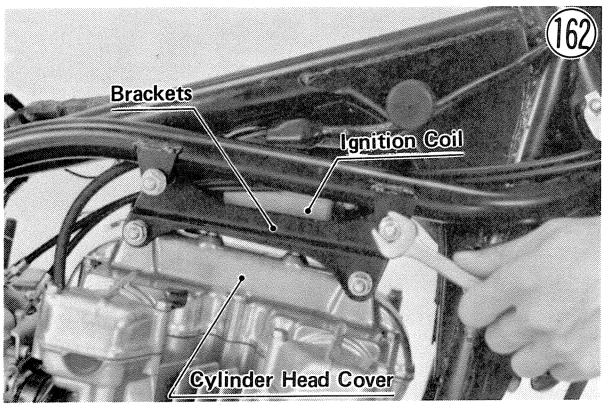

- Remove the bolts (2) that connect the ignition coil to the brackets, and remove the ignition coil.

Installation Notes:

1. Use only the Kawasaki ignition coil bolts to mount the ignition coil. Bolts of a different composition may adversely affect ignition coil performance.
2. Tighten the bracket bolts (4) to the specified torque (Pg. 201).

CONTACT BREAKER

Removal:

- Remove the contact breaker cover and gasket.
- Remove the contact breaker base screw. The screw has a flat washer and lock washer.

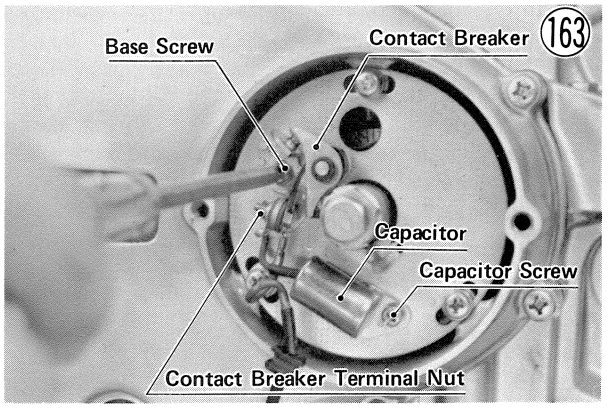

- Loosen the contact breaker terminal nut, and remove the two leads.

Installation Notes:

1. The sequence of installation on the contact breaker bolt is bolt ⑦, contact breaker lead ⑥, spring ④, large insulator ⑮, small insulator ⑩ (in contact breaker hole), large insulator ⑨, capacitor lead ⑭, flat washer ⑬, lock washer ⑫, and nut ⑪.

Contact Breaker Lead Installation

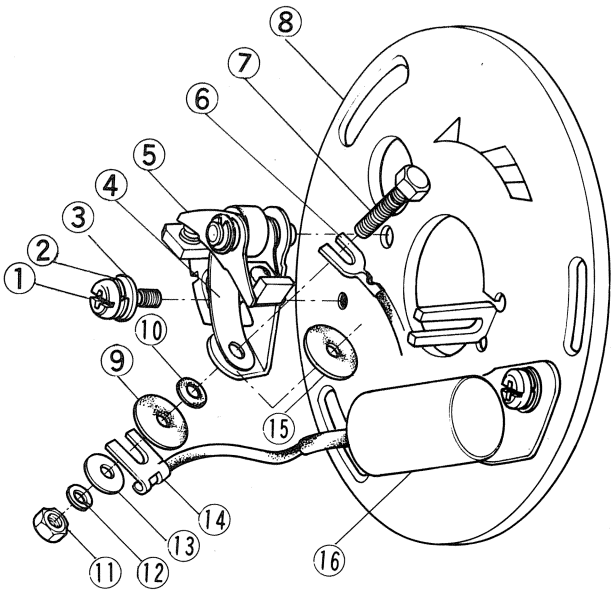

1. Screw
2. Lock Washer
3. Flat Washer
4. Spring
5. Contact Breaker
6. Contact Breaker Lead
7. Bolt
8. Contact Breaker Plate
9. Large Insulator
10. Small Insulator
11. Nut
12. Lock Washer
13. Flat Washer
14. Capacitor Lead
15. Large Insulator
16. Capacitor

2. After installation, adjust the ignition timing (Pg. 9).

CAPACITOR

Removal:

- Remove the contact breaker cover and gasket.
- Remove the capacitor screw (Fig. 163). The screw has a flat and lock washer.
- Loosen the contact breaker nut, and remove the capacitor lead to complete capacitor removal.

Installation Notes:

1. The sequence of installation on the contact breaker bolt is bolt, contact breaker lead, spring, large insulator, small insulator (in contact breaker hole), large insulator, capacitor lead, flat washer, lock washer, and nut (Fig. 164).
2. Match the capacitor mounting plate hole with pin on the contact breaker plate.

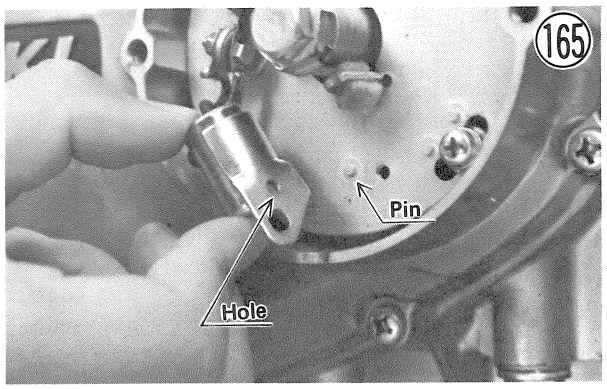

TIMING ADVANCER

Removal:

- Remove the contact breaker cover and gasket.
- Take out the contact breaker mounting plate screws, lock washers, and flat washers (3 ea), and remove the plate.

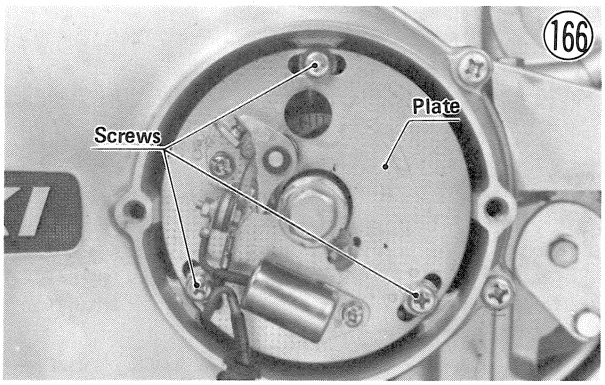

- With a 17 mm wrench on the crankshaft rotation nut to keep the shaft from turning, remove the advancer mounting bolt, and take off the rotation nut and the timing advancer.

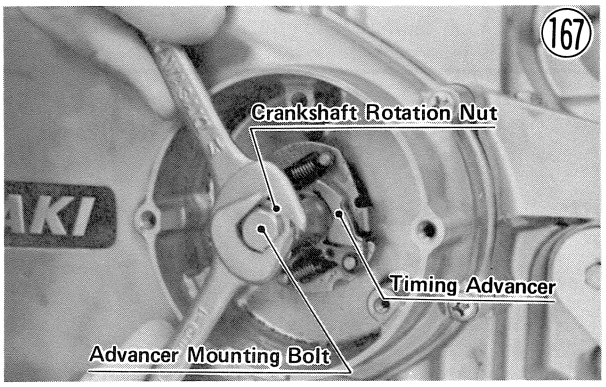

Installation:

- Fit the timing advancer onto the crankshaft matching its notch with the pin in the end of the crankshaft, and install the crankshaft rotation nut and the advancer mounting bolt. The notches in the nut fit the projections on the timing advancer. Tighten the bolt with 2.3~2.7 kg-m (16.5~19.5 ft-lbs) of torque.

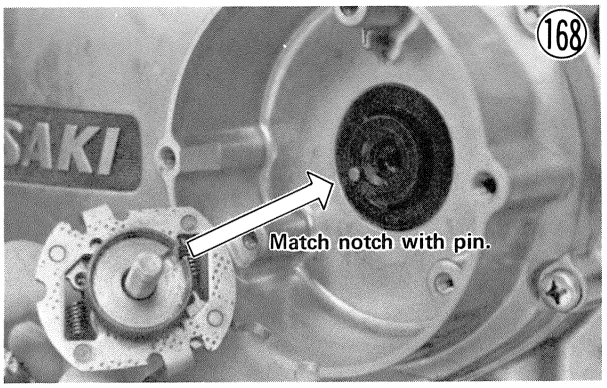

- Mount the contact breaker mounting plate, and tighten its screws (3) loosely. Each screw has a lock washer and flat washer.
- Adjust the ignition timing (Pg. 9).

Disassembly:

- Pull off the cam.

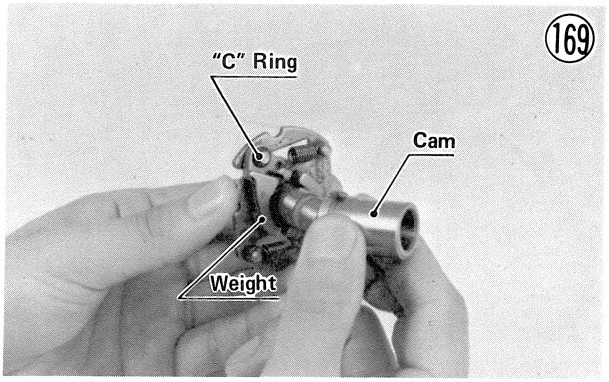

- Remove the **C** rings (2), washers (4), and weights (2).
- Remove the thrust washer from each weight shaft.

Assembly Notes:

1. Wipe the advancer clean, and fill the groove in the advancer body with grease.

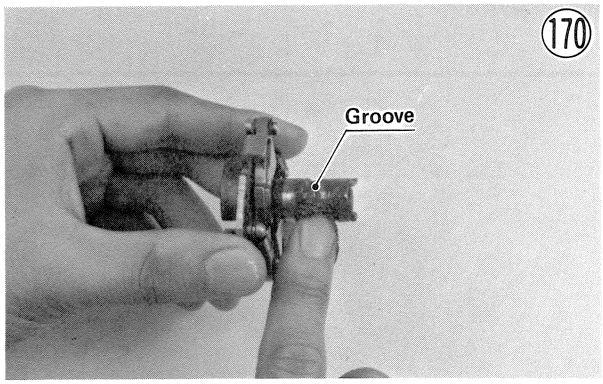

2. When installing the cam, align the mark on the cam with the notch on the advancer body.

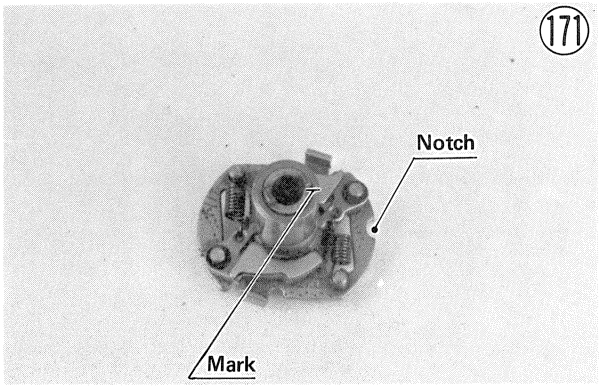

CLUTCH HUB AND CLUTCH PLATES

Removal:

- With the motorcycle on its center stand, place an oil pan beneath the engine, and remove the engine oil drain plug and washer to drain out the oil.
- After the oil has drained, tighten the drain plug with 2.7~3.3 kg-m (19.5~24.0 ft-lbs) of torque.
- Remove the timing advancer (Pg. 52).
- Remove the screws (12), and pull off the right engine cover and gasket. There is a slot to facilitate cover removal. Pry this point with a slot screwdriver.

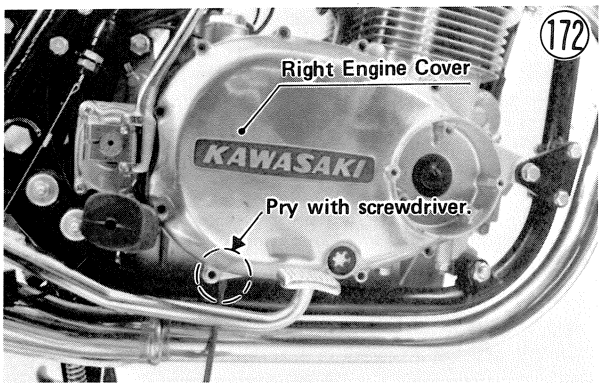

- Remove the clutch spring bolts ⑯ (5), washers ⑮ (5), and springs ⑭ (5).
- Pull off the spring plate ⑬, pull out the spring plate pusher ⑫, and tilt the motorcycle so that the steel ball ⑪ will fall out.
- Remove the friction plates ⑦ (8) and steel plates ⑧ (7).
- Hold the clutch hub from turning using a clutch holder (special tool), and remove the clutch hub nut ⑩ and washer ⑨.

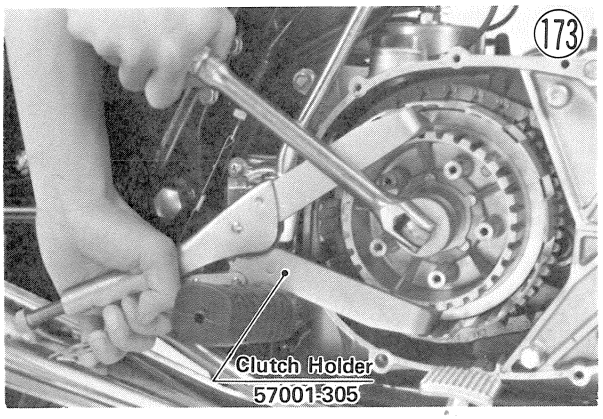

- Pull off the clutch hub ⑥. There is a thrust washer ④ at the rear of the clutch hub.

NOTE: The clutch housing cannot be removed without major disassembly work. To remove the clutch housing refer to the transmission removal section (Pg. 60).

Installation:

- Install the thrust washer, clutch hub, and lock washer. Replace the clutch hub nut with a new one, screw on the nut, and tighten it with 12 ~ 15 kg-m (87 ~ 108 ft-lbs) of torque, while holding the hub stationary with the clutch holder (special tool).

WARNING **The washer between the clutch hub and the clutch hub nut must be installed with the marked side, "OUT SIDE", facing out. If this washer is installed backwards, the hub nut might loosen during operation. This causes clutch disengagement and might cause primary chain breakage by the misalignment of the primary and the clutch housing sprockets, resulting in loss of motorcycle control.**

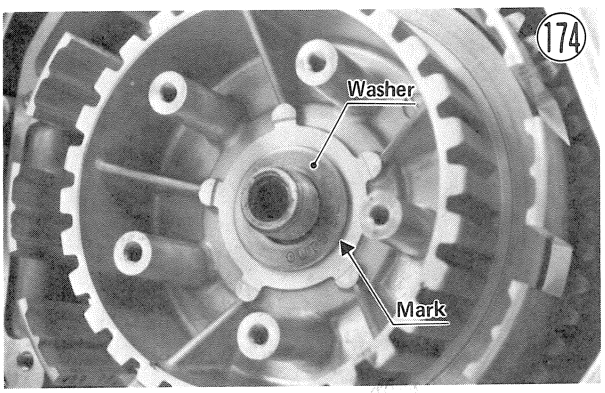

Clutch

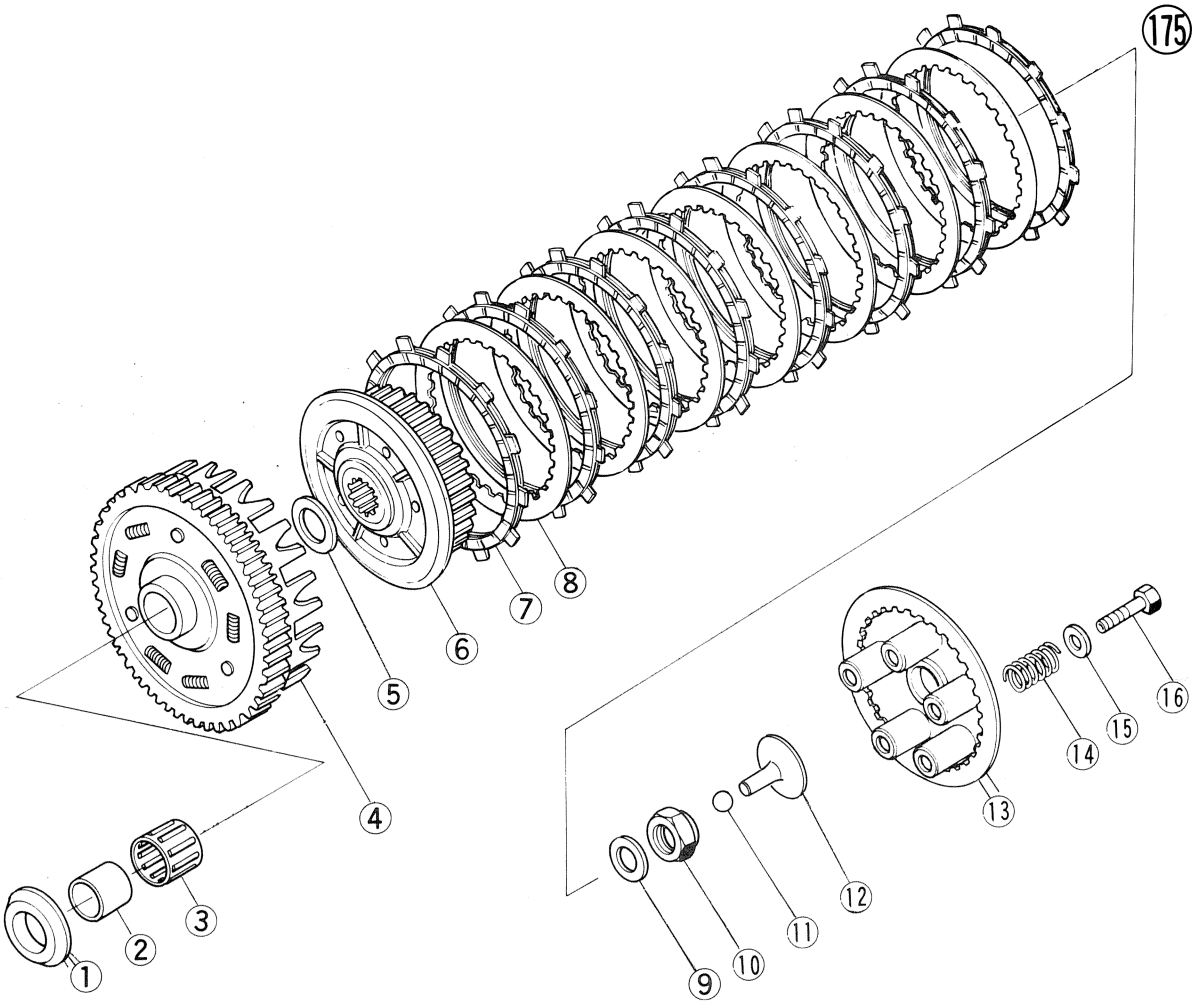

1. Spacer
2. Drive Shaft Sleeve
3. Needle Bearing
4. Clutch Hub
5. Thrust Washer
6. Clutch Hub
7. Friction Plate
8. Steel Plate
9. Lock Washer
10. Clutch Hub Nut
11. Steel Ball
12. Spring Plate Pusher
13. Spring Plate
14. Clutch Spring
15. Washer
16. Bolt

●Install the friction plates (8) and steel plates (7), starting with a friction plate and alternating them.

CAUTION **If new dry steel plates and friction plates are installed, apply engine oil on the surfaces of each plate to avoid clutch plate seizure.**

●Insert the steel ball and spring plate pusher, applying a high temperature grease to their surfaces.

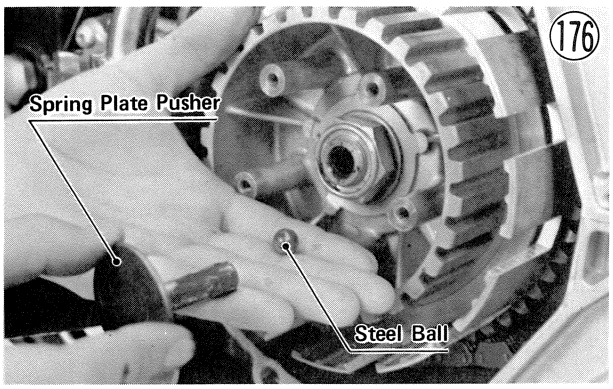

●Install the spring plate, springs, washers, and spring bolts (5 ea). Cross tighten the bolts evenly with 0.8 ~ 1.0 kg-m (69 ~ 87 in-lbs) of torque by hand.

NOTE: The spring plate can be installed on the clutch hub in any position, so there is no mark on either the spring plate or the clutch hub.

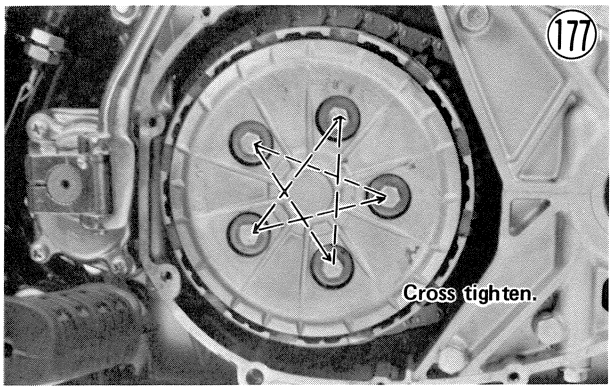

●Check that the spring in the engine cover crankshaft oil seal has not slipped out of its proper position and apply a high temperature grease to the oil seal lip. If the oil seal is damaged, replace it with a new one.

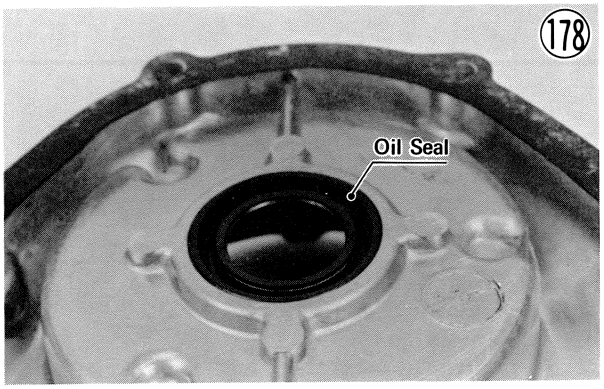

- Check that the two knock pins are in place, and using a new right engine cover gasket, fit the right engine cover onto the crankcase. Tighten the screws (12) firmly. Be sure to include the contact breaker lead clamps with their right engine cover screws.
- Fill the engine with oil, check the oil (Pg. 196), and add more if necessary.
- Install the timing advancer (Pg. 52).
- Adjust the ignition timing (Pg. 9).
- Adjust the clutch (Pg. 16).

CLUTCH RELEASE

Removal:

- Remove the left foot peg nuts (2), washers (2), and left foot peg.
- Take out the shift pedal bolt, and remove the shift pedal.
- Remove the engine sprocket cover bolts (4), and pull the cover free from the crankcase.
- Remove the cotter pin from the clutch release lever, and free the clutch inner cable tip from the lever and engine sprocket cover.

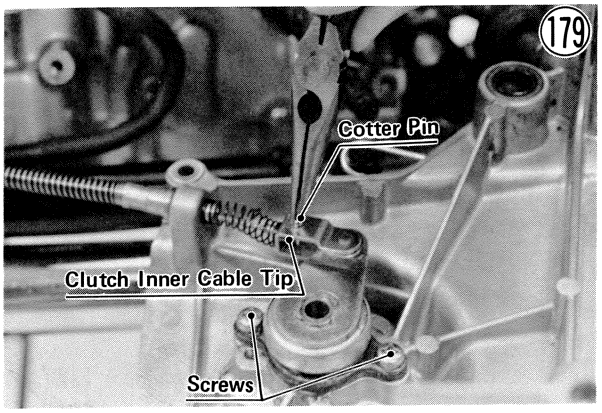

- Remove the clutch release assembly mounting screws (2), and remove the release assembly.
- Take out the circlip, and separate the outer release gear and the inner release gear.

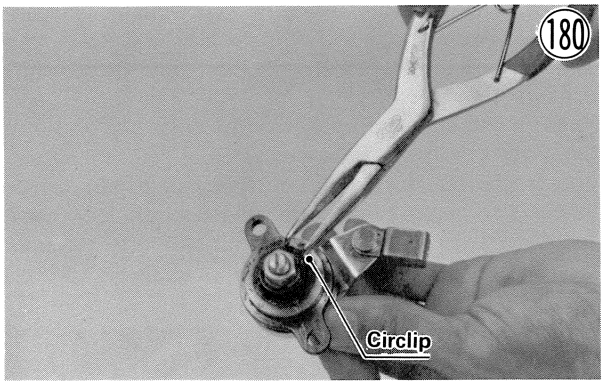

Installation:

- Wash and clean the release balls and inner release gear with a high flash-point solvent. Dry and lubricate them with grease.
- Fit the inner gear back into the outer release gear. When the two gears are fully meshed, the clutch release lever and the outer release gear must be positioned as shown in Fig. 181. The machined side of the outer release gear must face upward.

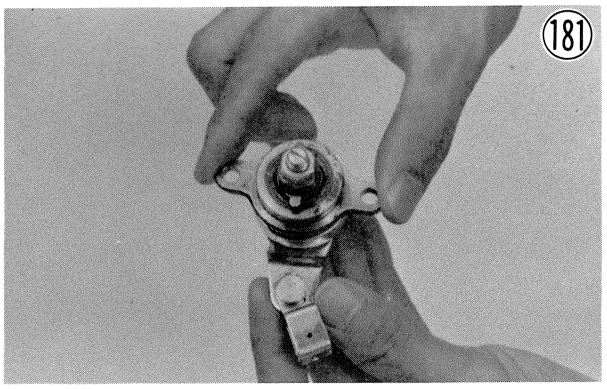

- Install the circlip on the inner release gear.
- Fit the clutch release lever assembly back into the engine sprocket cover, apply a non-permanent locking agent to the screws, and tighten the screws. The clutch release lever must be positioned as shown in Fig. 179, when the gears are fully meshed.
- Run the clutch cable into the engine sprocket cover and spring, and fit the tip of the inner cable into the clutch release lever.
- Using a new cotter pin, secure the cable tip to the release lever.
- Install the engine sprocket cover using the shift shaft oil seal guide (special tool) to protect the oil seal in the cover, and tighten its bolts.
- Mount the shift pedal so that its end matches the level of the engine sprocket cover lower left bolt.
- Mount the left foot peg with its nuts and washers.
- Adjust the clutch (Pg. 16).

ENGINE SPROCKET

Removal:

- Stand the motorcycle up on its center stand.
- Check that the transmission is in neutral.

- Remove the left foot peg nuts (2), washers (2), and left foot peg.
- Take out the shift pedal bolt, and remove the shift pedal.
- Remove the engine sprocket cover bolts (4), and pull the cover free from the crankcase.
- Loosen the rear torque link nut, rear axle nut, caliper holder sleeve nut, and chain adjuster bolt lock nuts, and then back out the chain adjuster bolts a couple of turns to give the chain plenty of play.

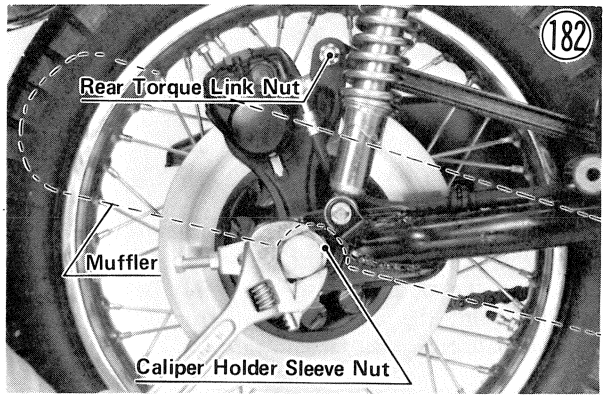

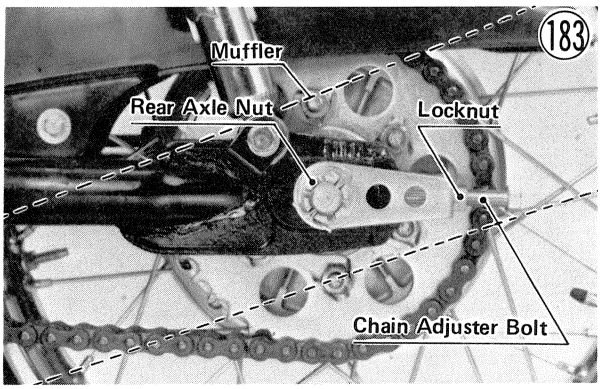

- Straighten the side of the toothed washer that is bent over the side of the engine sprocket nut.

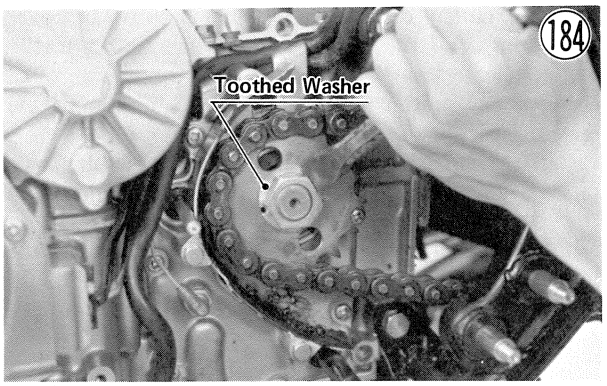

- Hold the engine sprocket steady using the engine sprocket holder (special tool), and remove the engine sprocket nut and toothed washer. Pull the engine sprocket off along with the drive chain.

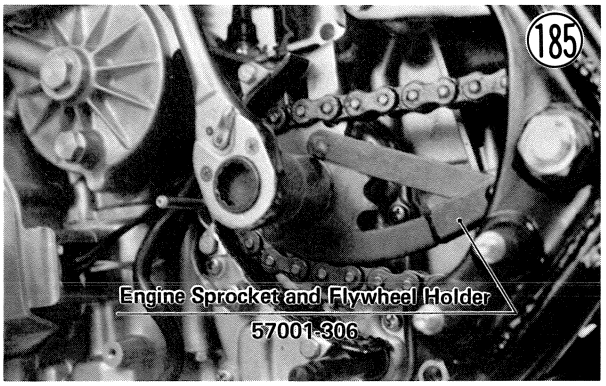

Installation:

- Mount the engine sprocket while meshed with the drive chain. Install the toothed washer engaging it with a hole in the sprockets.

NOTE: If the washer is splined and the sprocket nut is recessed; install the splined washer on the output shaft fitting their splines, and install the nut facing the recessed side toward the engine.

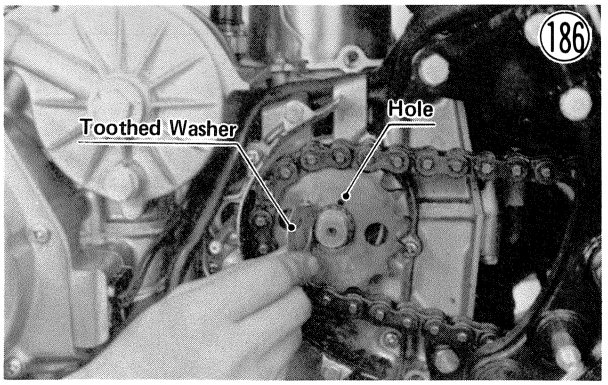

- Install the engine sprocket nut, and then tighten the nut with 7.5 ~ 8.5 kg-m (54 ~ 61 ft-lbs) of torque while using the engine sprocket holder to keep the sprocket steady.
- Bend back one side of the toothed washer over the side of the nut.
- Install the engine sprocket cover using the shift shaft oil seal guide (special tool) to protect the cover oil seal, and tighten its bolts.
- Mount the shift pedal so that its end matches the level of the engine sprocket cover lower left bolt.
- Mount the left foot peg with the nuts and washers.
- Adjust the drive chain (Pg. 17).

NEUTRAL INDICATOR SWITCH

Removal:

- Remove the left foot peg nuts (2), washers (2), and left foot peg.
- Take out the shift pedal bolt, and remove the shift pedal.
- Remove the engine sprocket cover bolts (4), and pull the cover free from the crankcase.
- Pull the neutral indicator switch lead off the switch.

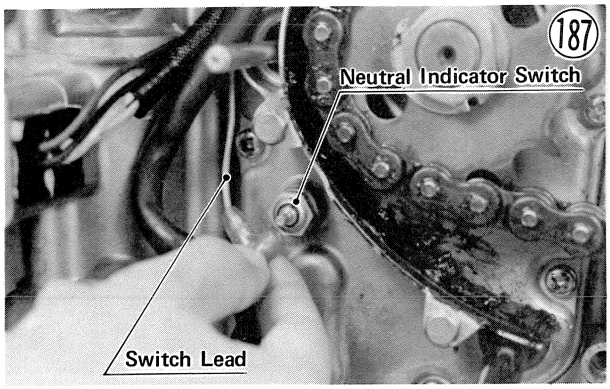

●Unscrew the neutral indicator switch and gasket.

Installation:

●Install the neutral indicator switch and gasket tightening it with 1.3 ~ 1.7 kg-m (9.5 ~ 12.0 ft-lbs) of torque.
●Fit the lead back on the switch.
●Install the engine sprocket cover using the shift shaft, oil seal guide (special tool) to protect the cover oil seal, and tighten its bolts.
●Mount the shift pedal so that its end matches the level of the engine sprocket cover lower left bolt.
●Mount the left foot peg with the nuts and washers.

EXTERNAL SHIFT MECHANISM

Removal:

●Remove the engine sprocket (Pg. 55).
●Disconnect the neutral indicator switch lead and pull out the clutch push rod.

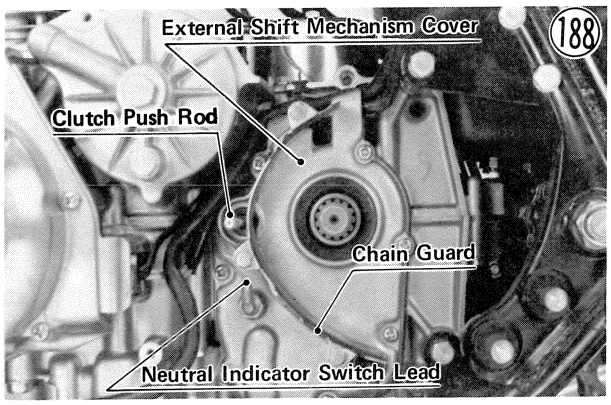

●Remove the engine sprocket chain guard.
●Remove the external shift mechanism cover screws (7), and pull off the external shift mechanism cover and gasket.
●Remove the output shaft collar, using a bearing puller if it is difficult to remove, and take off the **O** ring.

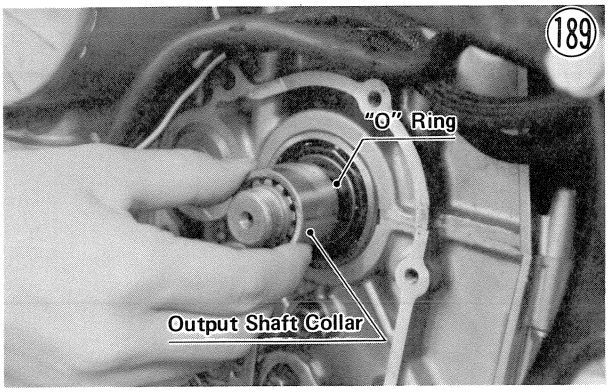

●Move the shift mechanism arm and overshift limiter out of their positions on the end of the shift drum, and pull out the external shift mechanism.

NOTE: Do not pull the shift rod more than 40 mm out of the crankcase, or the shift forks inside the crankcase will fall to the bottom of the oil pan, requiring removal of the oil pan to install them.

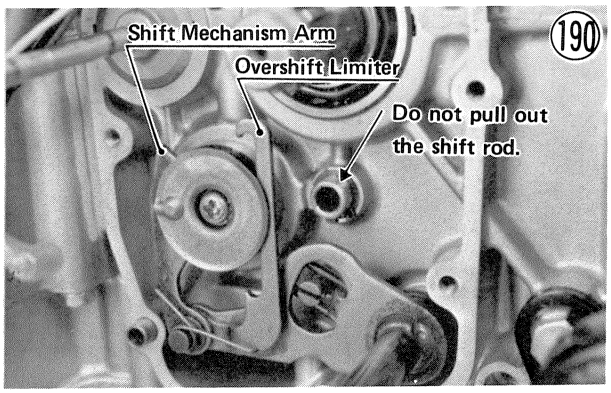

External Shift Mechanism

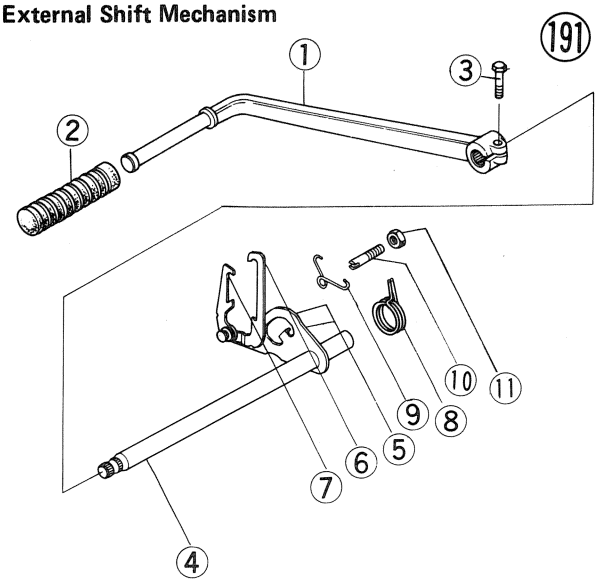

1. Shift Pedal
2. Pedal Rubber
3. Bolt
4. Shift Shaft
5. Shift Lever
6. Overshift Limiter
7. Shift Mechanism Arm
8. Return Spring
9. Pawl Spring
10. Return Spring Pin
11. Locknut

Installation:

- If the shift drum pins were removed, make sure the one long pin is assembled in the position shown. If this pin is assembled in the wrong position, the neutral indicator light will not light when the gears are in neutral.

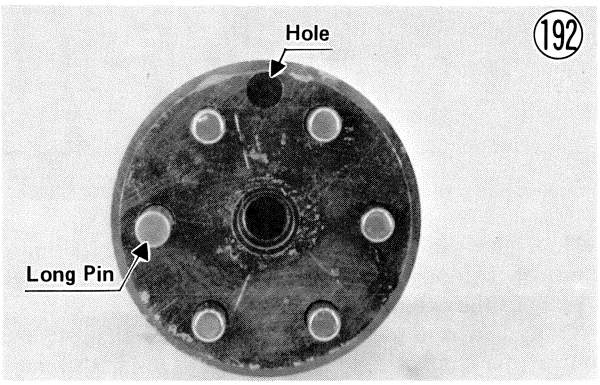

- Check that the external shift mechanism return spring pin is not loose. If it is loose, remove it, apply a non-permanent locking agent to the threads, re-install it, and tighten the locknut.

NOTE: The return spring pin must be screwed in until it protrudes approximately 20 mm from the crankcase, so that it can work satisfactorily as an external shift mechanism lever stopper.

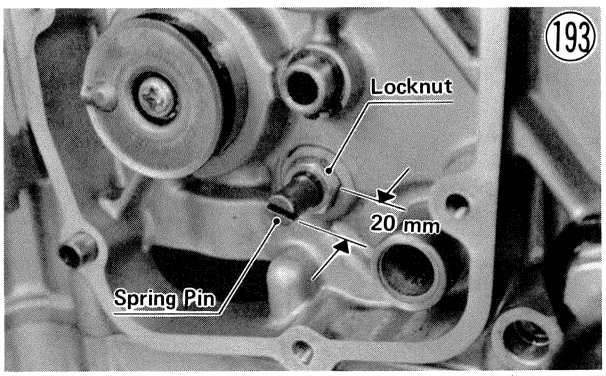

- Check that two knock pins are in place.
- Replace the output shaft **O** ring with a new one if it is damaged, and install it next to the ball bearing inner race.
- Check that the return spring is properly fitted on the shaft, install the external shift mechanism, and place the shift mechanism arm and overshift limiter on the shift drum pins.

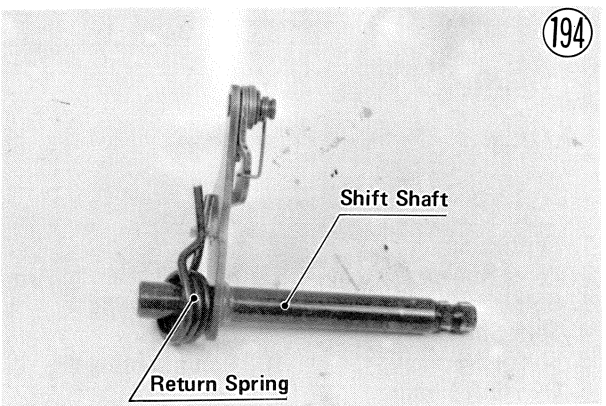

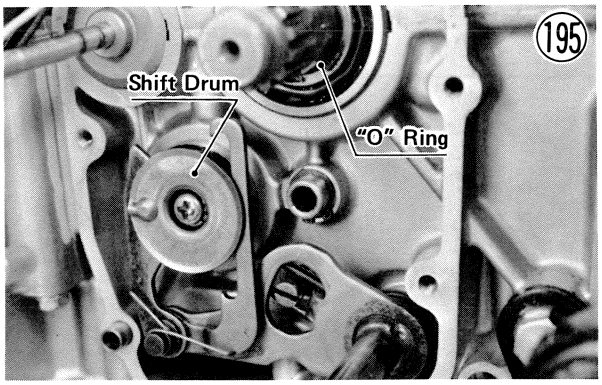

- Apply a high temperature grease to the lips of the clutch push rod oil seal and the output shaft collar oil seal.
- Insert the shift shaft oil seal guide (special tool) in the external shift mechanism cover oil seal, and install the cover and then tighten the screws (7).

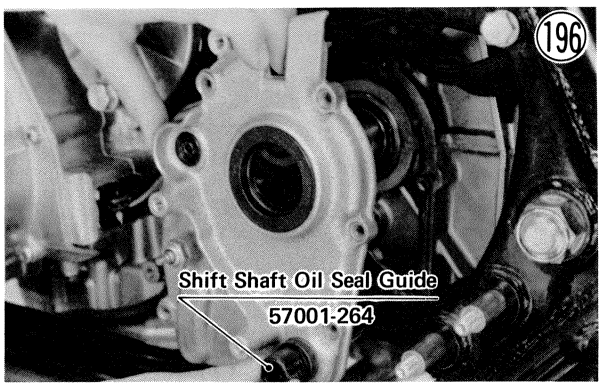

- Install the output shaft collar on the output shaft.
- Install the engine sprocket chain guard.
- Fit the neutral indicator switch lead back on the switch and install the clutch push rod.
- Install the engine sprocket (Pg. 56).
- Adjust the drive chain (Pg. 17).
- Check the oil level and add oil (Pg. 196).

KICKSTARTER SPRING

Removal:

- Remove the right foot peg.
- Mark the position of the kickstarter pedal so that it can later be installed on the kick shaft in the same position.
- Take out the kickstarter pedal bolt, slightly widen the gap in the kickstarter pedal with a screwdriver, and then pull off the kickstarter pedal.
- Remove the kickstarter cover screws (4), and pull off the kickstarter cover and gasket, prying the points shown in Fig. 197 with a screwdriver.

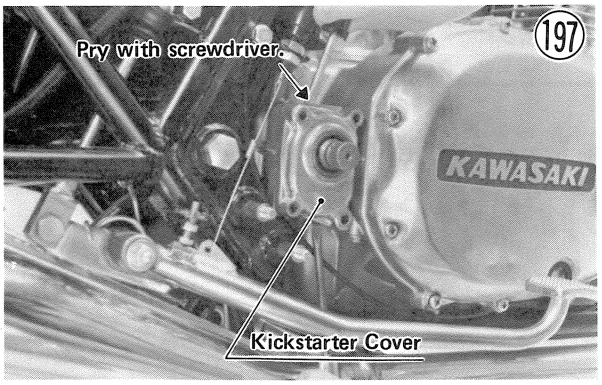



●Pull out the spring guide, and remove the kick spring.

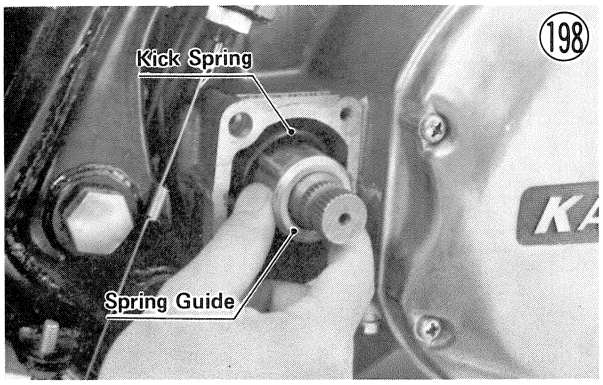

Installation Notes:

1. To install the kick spring, turn the kick shaft all the way clockwise, insert one end of the spring into the crankcase hole, insert the other end into the kick shaft using needle nose pliers, and, while holding the spring in place if necessary, insert the kick spring guide.

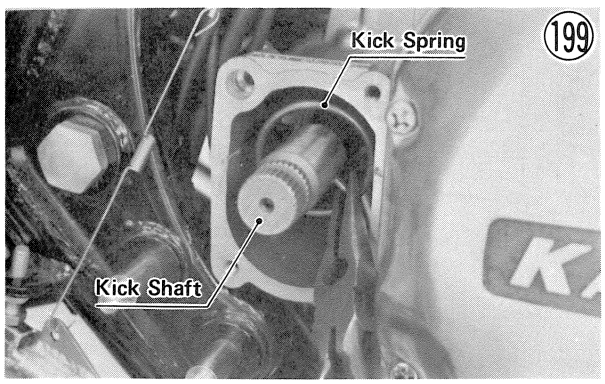

2. Using a new kickstarter cover gasket, fit the kickstarter cover onto the crankcase. Use the kick shaft oil seal guide (special tool) to protect the kick shaft oil seal. Tighten the screws (4) firmly.

BREATHER COVER

Removal:

●Remove the breather pipe from the breather cover bolt.

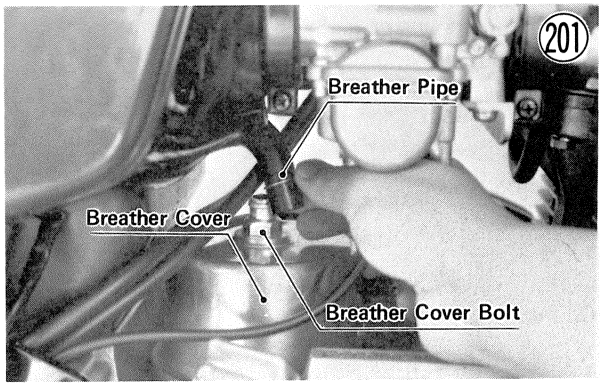

●Remove the breather cover bolt and **O** ring, and take off the breather cover and **O** ring.
●Remove the breather plate screws (2), and remove the breather plate with the breather tubes.

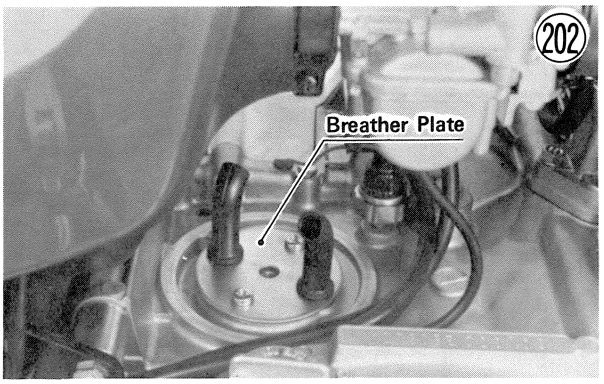

Installation Notes:

1. Replace the breather cover **O** ring, or breather cover bolt **O** ring with a new one if deteriorated or damaged.
2. Tighten the breather cover bolt with 1.3～1.7 kg-m (9.5～12.0 ft-lbs) of torque.
3. If the baffle plate is removed, apply a non-permanent locking agent on the plate mounting bolt threads, and

tighten them with 0.5 kg-m (43 in-lbs) of torque.

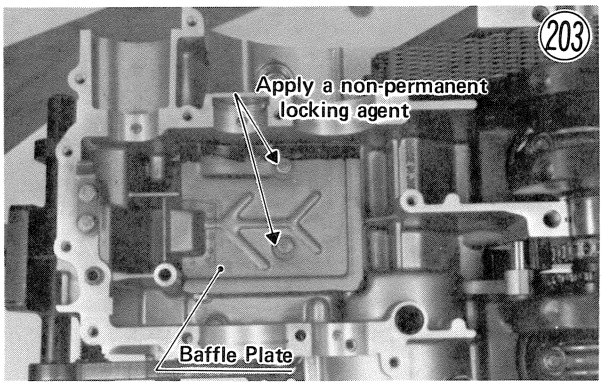

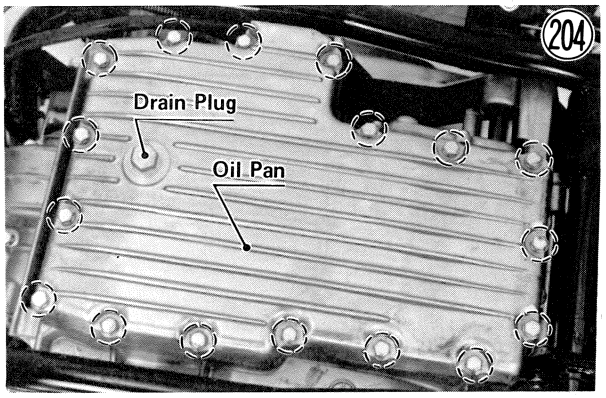

ENGINE OIL PUMP

Removal:

- With the motorcycle on its center stand, place an oil pan beneath the engine, and remove the engine oil drain plug to drain out the oil.
- After the oil has drained out, install the drain plug and tighten it with 2.7 ~ 3.3 kg-m (19.5 ~ 24.0 ft-lbs) of torque.
- Remove the mufflers (Pg. 32).
- Remove the oil pan bolts (17) and starter motor lead clamp, and take off the oil pan and gasket.
- Remove the engine oil pump bolts (3), and take off the engine oil pump.

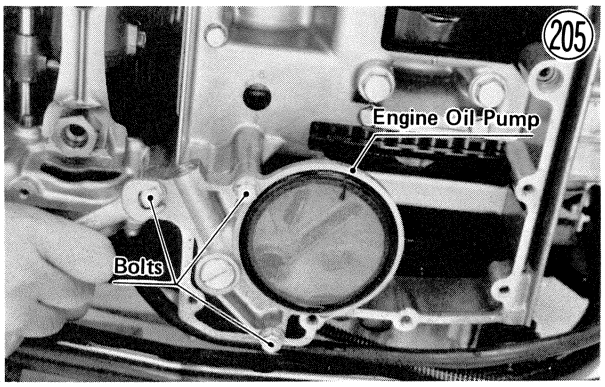

Oil Pump

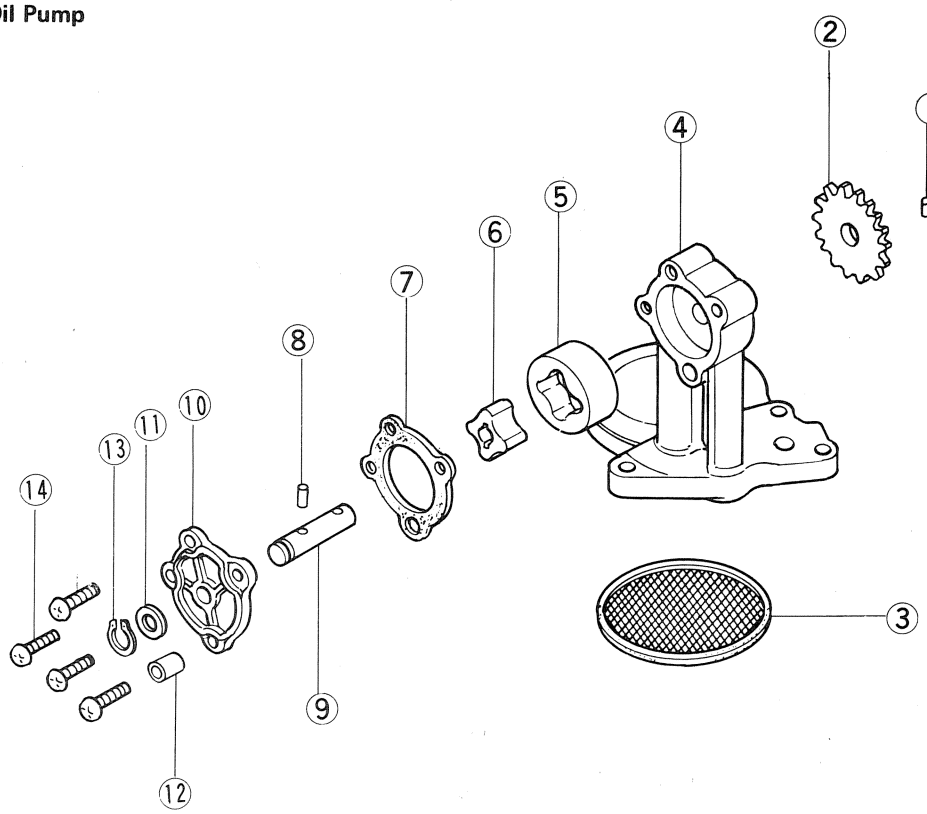

1. Pin
2. Pump Gear
3. Screen
4. Pump Body
5. Outer Rotor
6. Inner Rotor
7. Gasket
8. Pin
9. Pump Shaft
10. Pump Cover
11. Washer
12. Knock Pin
13. Circlip
14. Pump Cover Screw

Installation Notes:

1. Replace the oil passage O ring and oil pan gasket with new ones.

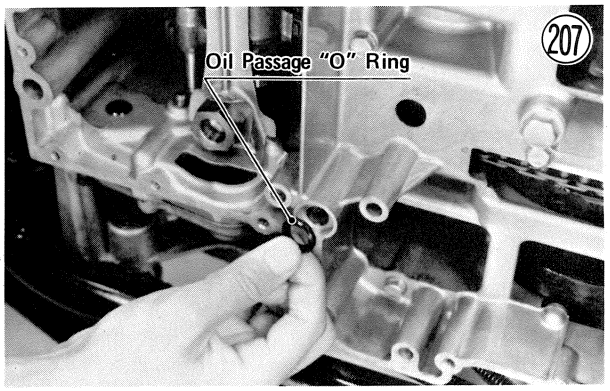

2. Fill the oil pump with engine oil for initial lubrication.
3. Check to see that knock pins (2) are in place.
4. Be sure the oil pump gear and pump drive gear at the end of the balancer shaft mesh properly.
5. Apply non-permanent locking agent to the engine oil pump bolts (3), and tighten them with 0.9 ~ 1.1 kg-m (78 ~ 95 in-lbs) of torque.
6. Tighten the oil pan bolts (17) with 0.9 ~ 1.1 kg-m (78 ~ 95 in-lbs) of torque.

Disassembly:

- Remove the circlip ⑬ and washer ⑪ on the pump shaft end.
- Remove the oil pump cover screws ⑭ (4), and take off the oil pump cover ⑩ and gasket ⑦.
- Take out the rotors ⑤, ⑥.
- Take out the pin ⑧, and pull off the oil pump gear ② and shaft ⑨.
- Slide off the pump gear, and take out the pin ① from the shaft.

Assembly Notes:

1. Replace the gasket with a new one.
2. After completing the oil pump assembly, check that the rotor shaft and rotor turn smoothly.

TRANSMISSION

Removal:

- Remove the engine (Pg. 23).
- Remove the spark plugs.
- Set the engine on a clean surface or, preferably, into a disassembly apparatus with some means of holding the engine steady while parts are being removed.

NOTE: If the engine is to be set onto the Kawasaki engine disassembly apparatus, one of the upper crankcase half bolts (3) shown in Fig. 208 must be removed before positioning the engine.

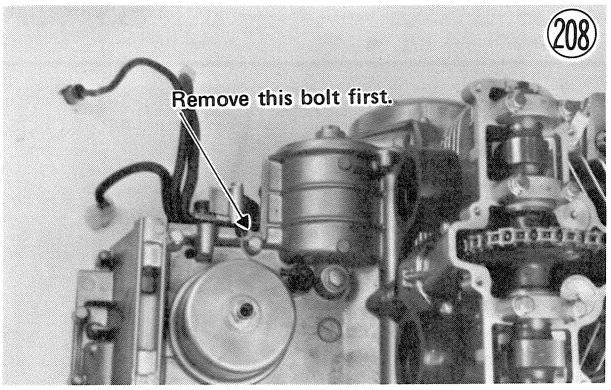

- Pull the neutral indicator switch lead from the switch.

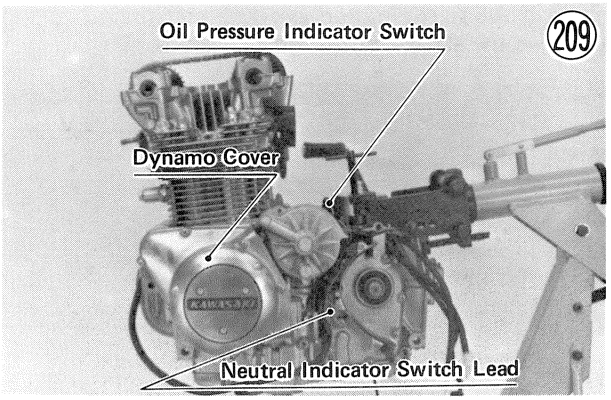

- Disconnect the oil pressure indicator switch lead from the switch.
- Remove the dynamo cover screws (8), and pull off the dynamo cover and gasket.
- Hold the dynamo rotor (flywheel) steady with the special tool, and remove the bolt. The bolt must be turned clockwise for removal. For '76 and '77 models, use the dynamo rotor holder (PN 57001-255) to hold the rotor steady; for '78 and later models, use the flywheel holder (PN 57001-308). See Fig. 210 and 149.

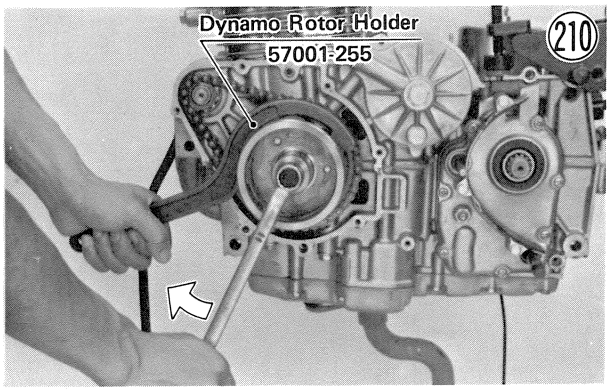

- Using the special tool to hold the rotor (flywheel) steady, remove the rotor (flywheel) and starter clutch assembly with the dynamo rotor puller (special tool). There is a thrust washer at the rear of the rotor (flywheel).

rotor puller (special tool). There is a thrust washer at the rear of the rotor.

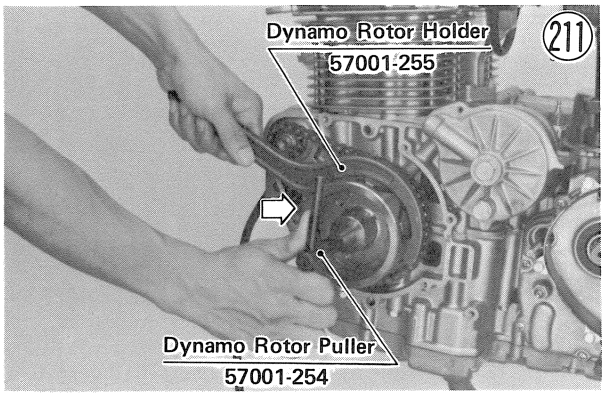

- Pull off the starter motor sprockets and chain.
- Remove the starter motor retaining bolts (2).

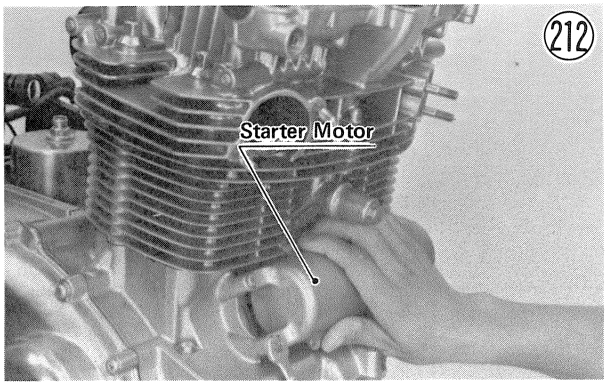

- Pry the starter motor loose from the crankcase with a screwdriver and pull the starter motor off towards the right side of the engine (Fig. 156).

CAUTION **Do not tap on the starter motor shaft. Tapping on the shaft may damage the motor.**

- Remove the engine sprocket chain guard.

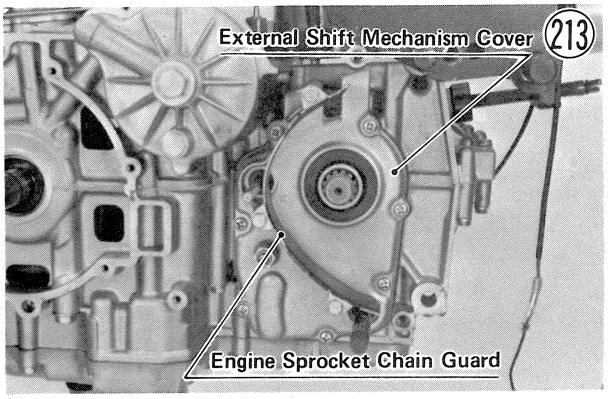

- Remove the external shift mechanism cover screws (7), and pull off the external shift mechanism cover and gasket.
- Take off the output shift collar, using a bearing puller if it is difficult to remove, and take off the O ring.

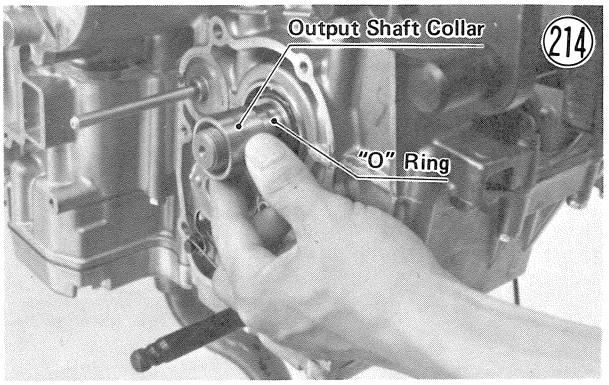

- Move the external shift mechanism lever arms out of their positions on the end of the shift drum, and pull out the external shift mechanism.
- Remove the contact breaker cover and gasket.
- Take out the contact breaker plate screws, lock washers, and flat washers (3 ea), and remove the plate.

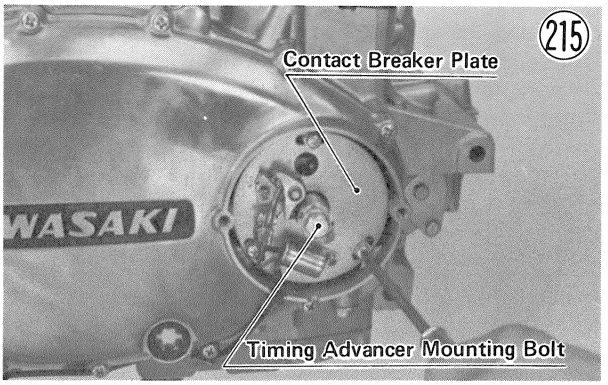

- With a 17 mm wrench on the crankshaft rotation nut to keep the shaft from turning, remove the advancer mounting bolt, and take off the timing advancer.
- Mark the position of the kickstarter pedal so that it can later be replaced on the kick shaft in the same position.
- Take out the kickstarter pedal bolt, slightly widen the gap in the kickstarter pedal with a screwdriver, and then pull off the kickstarter pedal.
- Remove the kickstarter cover screws (4), and pull off the kickstarter cover and gasket, prying the points shown in Fig. 197 with a screwdriver.
- Pull out the spring guide, and remove the kick spring.
- Remove the screws (12), and pull off the engine cover and gasket. There is a slot to facilitate cover removal. Pry this point with a screwdriver.

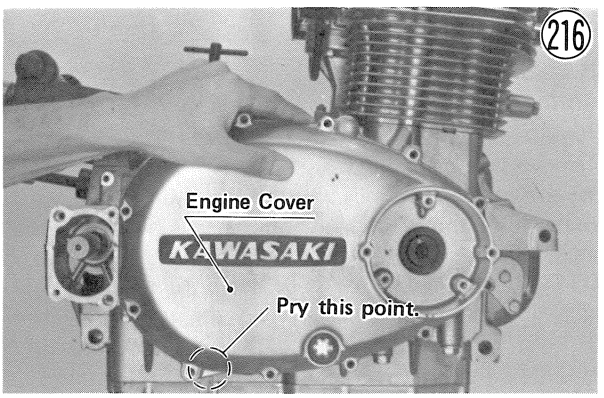

●Remove the clutch spring bolts (5), washers (5), and springs (5).

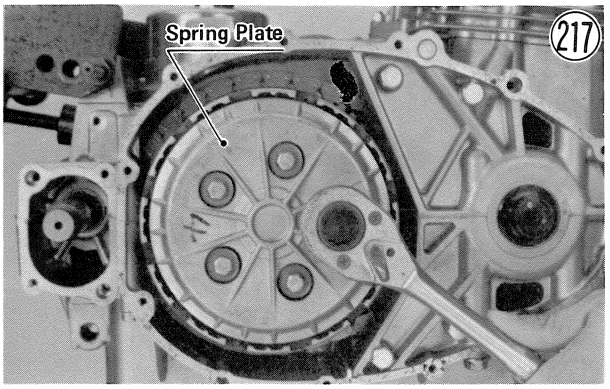

●Pull off the spring plate and spring plate pusher.
●Push in on the push rod to remove the steel ball, and pull out the push rod.

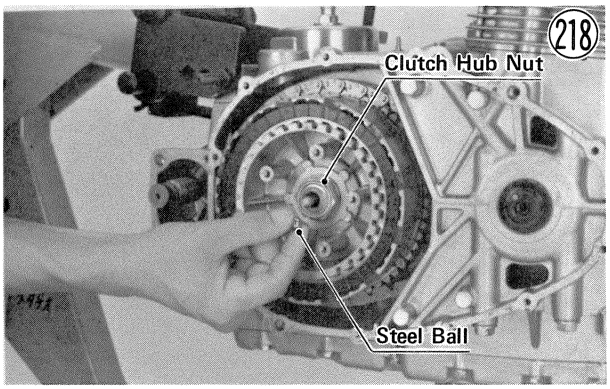

●Remove the friction plates (8) and steel plates (7).
●Hold the clutch hub from turning using a clutch holder (special tool), and remove the clutch hub nut and washer.

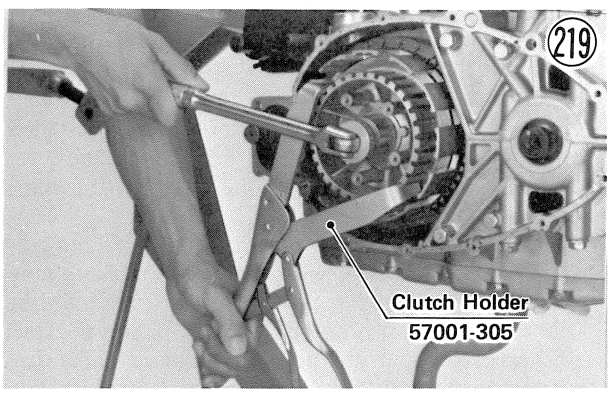

●Pull off the clutch hub. There is a thrust washer at the rear of the clutch hub.
●Remove the upper crankcase half bolts (3, or 2 if one was removed just after engine removal).

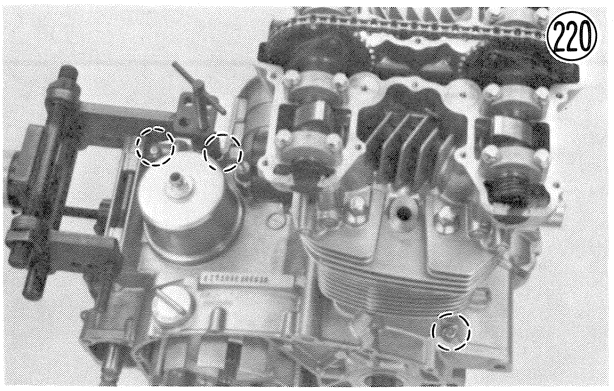

●Turn the engine upside down, remove the oil pan bolts (17) and starter motor lead clamp, and remove the oil pan and gasket.
●Remove the engine oil pump bolts (3), and take off the engine oil pump.

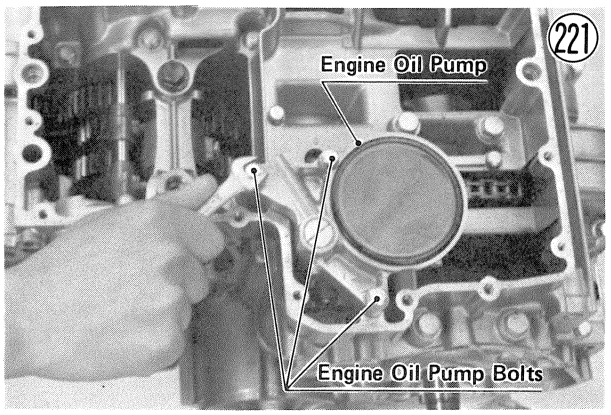

●To hold the balancer chain guide in the original position after separating the crankcase halves, turn a 4 mm screw into the chain tensioner body. Use a screw which has a 0.7 mm thread pitch and about 15 mm length.

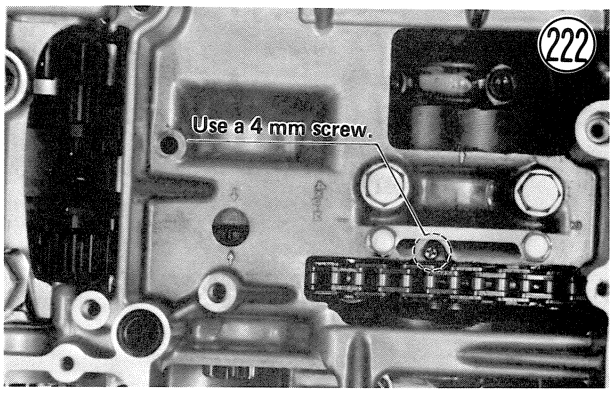

●Remove the 6 mm lower crankcase half bolts (17) and 10 mm bolts (6), pry the two points shown in Fig. 223 to split the two crankcase halves apart, and lift off the lower crankcase half.

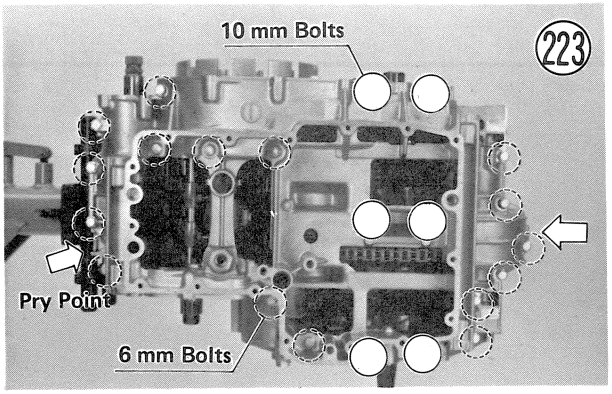

●Take out the kick shaft and output shaft assemblies.

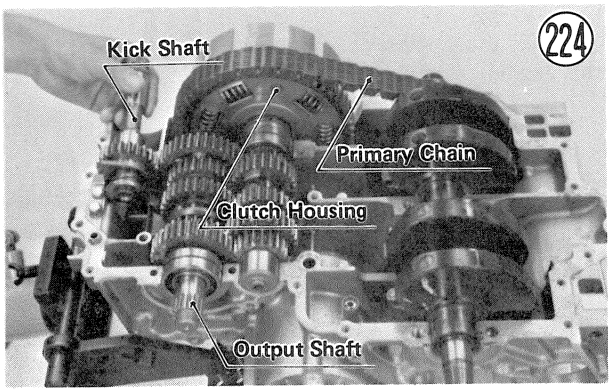

●Slip out the clutch housing from the primary chain, and take out the clutch housing with the drive shaft assembly.
●Pull out the shift rod, and remove the two shift forks in the lower crankcase half.

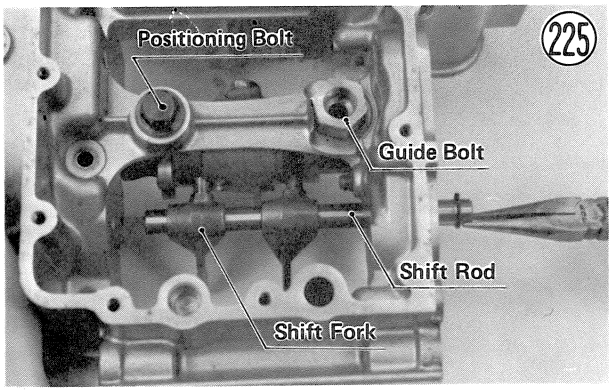

●Remove the shift drum positioning bolt, spring, and pin.
●Straighten the side of the lock washer that is bent over the side of the shift drum guide bolt, and remove the bolt.
●For 1976 and 1977 models, straighten the side of the lock washer that is bent over the side of the drive shaft 3rd gear shift fork guide bolt, and remove the bolt. For 1978 and later models, remove the cotter pin, and pull out the drive shaft 3rd gear shift fork guide pin.

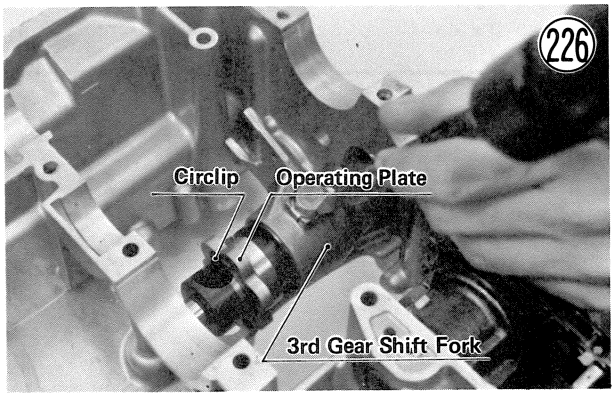

●Pull out the shift drum slightly, remove the operating plate circlip, the operating plate, and drive shaft 3rd gear shift fork. Pull the shift drum free from the crankcase.
●Remove the blind cap stopper bolt and washer, and pull the blind cap.

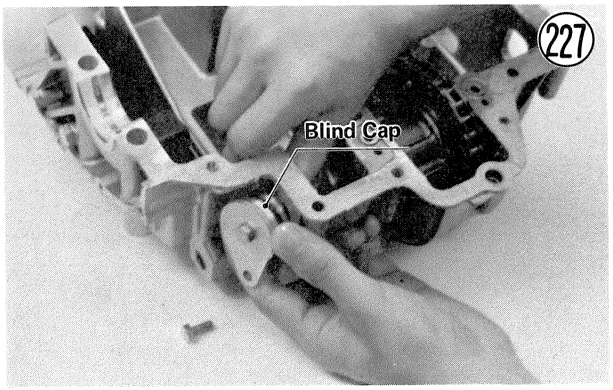

Installation:

NOTES: 1. The upper crankcase half and the lower crankcase half are machined at the factory in the assembled state, so the crankcase halves must be replaced together as a set.
2. When replacing new crankcase halves, to seat the bypass valve steel ball evenly in the bottom of the upper crankcase half, insert the soft steel rod and hammer lightly the rod.
3. Check that the output shaft 1st gear turns freely by hand with the output shaft assembly installed on the upper crankcase half. If it does not, replace the steel washer with the thinner (0.5 mm) washer.
4. Check the clearance between the drive shaft 2nd gear and the copper washer with the drive shaft assembly installed on the upper crankcase half. It should be 0.1 ~ 0.5 mm. If it is not, change and/or add the steel washer(s) to obtain the proper clearance. Three sizes of steel washers (1.0, 0.7, 0.5 mm thick) are availably from Kawasaki dealers.

●Insert the shift drum into the crankcase part way, replace the 3rd gear shift fork with the short end facing the neutral switch, i.e., the short end goes onto the drum first.

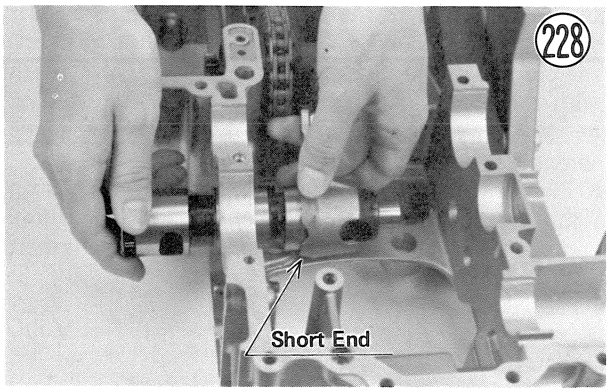

●Check to see that the operating plate pin is in place, fit the operating plate onto the end of the shift drum, and install the circlip.

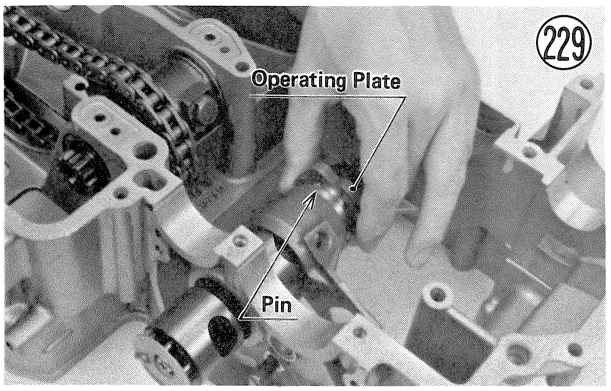

●For 1976 and 1977 models, push the shift drum in the rest of the way, fit a new lock washer on the shift fork guide bolt. Tighten the bolt securely, and bend the side of the lock washer over the side of the bolt. The guide bolt rides in the middle groove of the three guide pin grooves.

●For 1978 and later models, put the 3rd gear shift fork guide pin into the 3rd gear shift fork. The guide pin rides in the middle groove of the three guide pin grooves. Insert a new cotter pin through the 3rd gear shift fork and guide pin from the long end side of the shift fork, and spread the cotter pin long end inward.

●Tighten the shift drum guide bolt, and bend the side of the lock washer over the side of the bolt. The lock washer must seat in the crankcase.

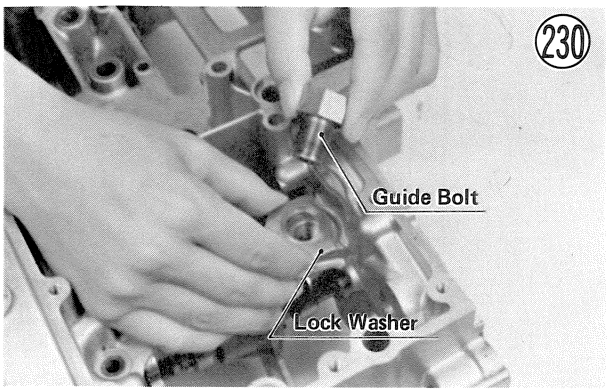

●Check to see that the following parts are in place on both the upper crankcase half and the lower crankcase half, and blow the oil passage nozzles clean with compressed air.

Upper crankcase half:

Knock pins (2); oil passage O ring (use a new one if deteriorated or damaged); oil pressure relief valve; drive shaft and output shaft set rings (2); drive output, and kick shaft set pins (3); and passage nozzles (2); and baffle plate.

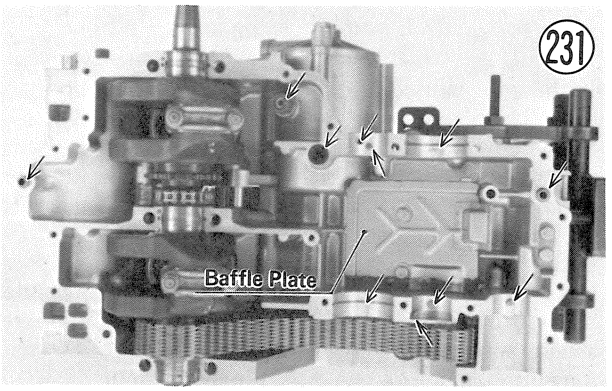

Lower crankcase half:

Crankshaft main bearing inserts (3); and balancer shaft needle bearing Allen screws (4), see CAUTION 2. on Pg. 76.

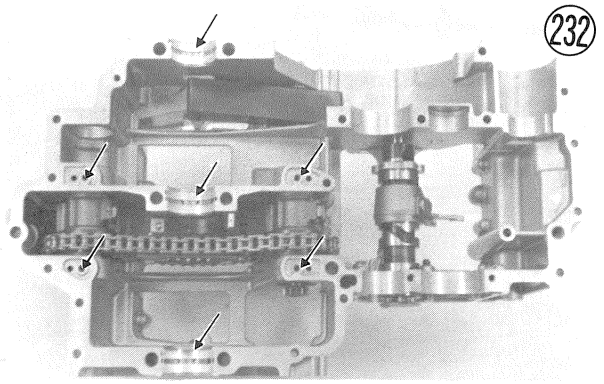

●With a high flash-point solvent, clean off the mating surfaces of the crankcase halves and wipe dry.

●Fit the output and drive shaft assemblies, and kick shaft on the upper crankcase half. When installing the output shaft, drive and kick shafts, the crankcase set pins must go into the holes in the respective bushings or bearing races, and the set rings must fit into the grooves in each ball bearing.

CAUTION **Make sure the crankcase set pins are properly aligned to avoid damage to the crankcases upon installation.**

●Apply a little engine oil to the transmission gears, ball bearings, shift drum.

●Apply a little molybdenum disulfide grease for engine assembly to the camshaft main bearing inserts.

●Temporarily install the timing advancer, and, with a 17 mm wrench, turn the crankshaft so that the crankshaft oil holes are even with the upper crankcase half surface, with flywheels positioned up.

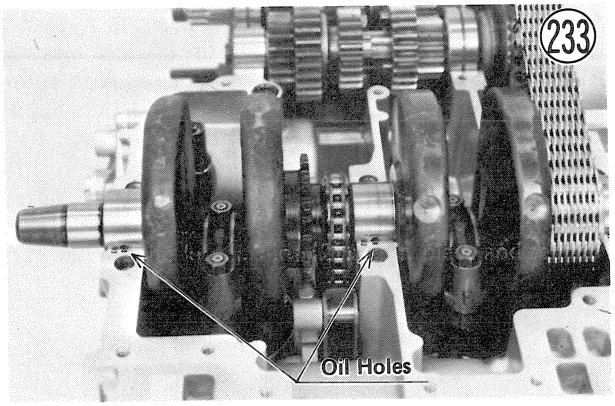

●If the wire is used to hold the ratchet pin in the balancer chain tensioner body, use the following 3 steps.
○Straighten out the lock washer sides which are bent over against the balancer chain tensioner bolts (2), and remove the bolts, lock washer, and balancer chain tensioner assembly.
○Push the ratchet pin all the way into the tensioner body by working the pin back and forth. Align the holes in the tensioner body and the ratchet pin. Insert a wire about 2 mm in diameter and at least 100 mm long into the holes to hold the pin in position.

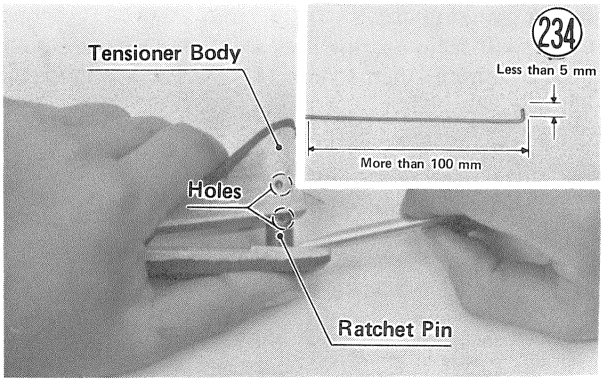

○Reinstall the balancer chain tensioner assembly, running the wire through the center window in the lower crankcase half.

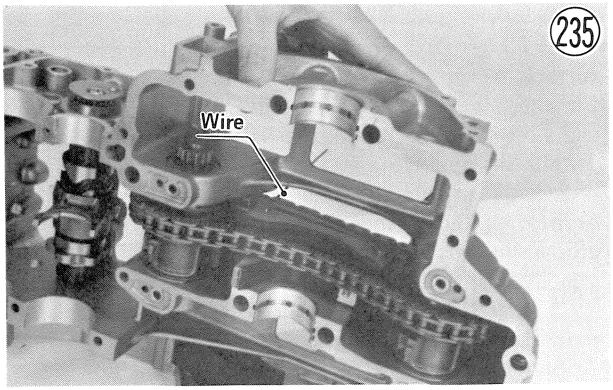

●Use a new lock washer, apply a non-permanent locking agent to the threads of the mounting bolts. Check to see that the balancer chain timing is correct, then bend the sides of the washer over against the balancer chain tensioner bolts (2). The tightening torque of the mounting bolts is 0.9~1.1 kg-m (78~95 in-lbs).

●Check to see that the balancer chain and balancer sprockets are properly fitted. For the front sprocket, the chrome plated link must fit on the sprocket tooth with the punch mark. For the rear sprocket, the link between two chrome plated links must fit on the sprocket tooth with the punch mark.

NOTE: There are four plated links, and, with the chain in the position mentioned above, the 2nd plated link counted from the front will be located on the crankshaft side.

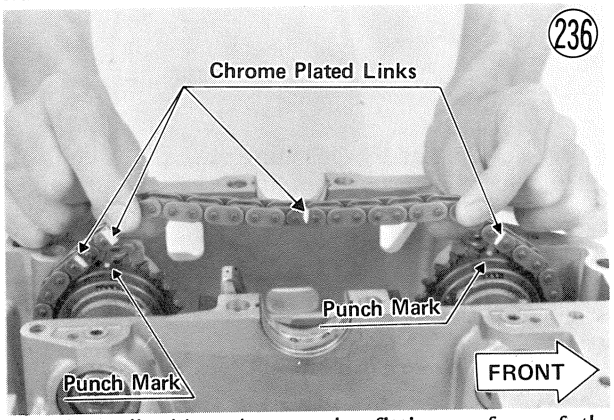

●Apply a liquid gasket to the fitting surface of the lower crankcase half in the areas shown in Fig. 237.

CAUTION **If liquid gasket adheres to any areas not indicated, the engine oil passages may be obstructed, causing engine seizure.**

Liquid Gasket Applied Areas

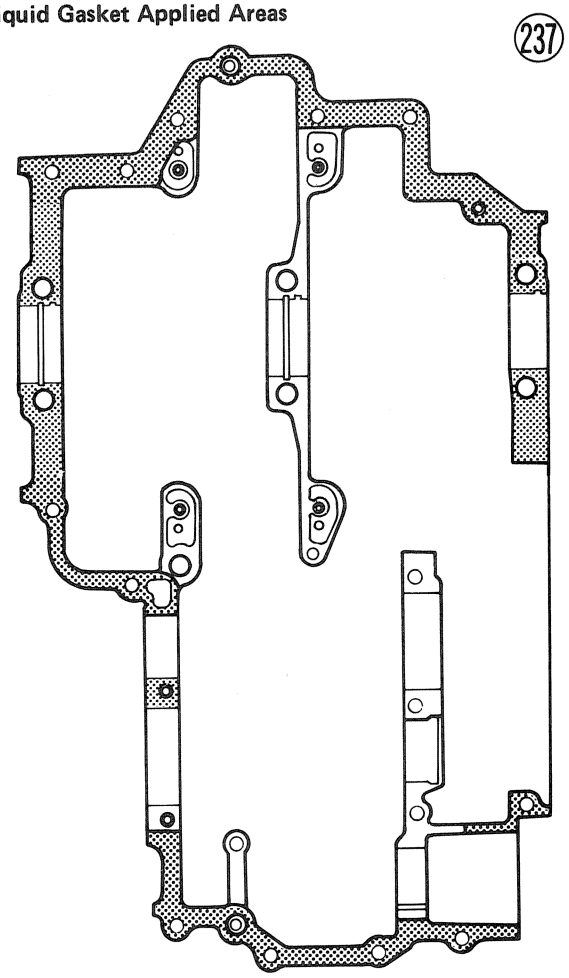

●Fit the lower crankcase half on the upper crankcase half, engaging the 2nd plated link with the top front tooth of the sprocket on the crankshaft. The 3rd gear shift fork must fit in the drive shaft 3rd gear groove.

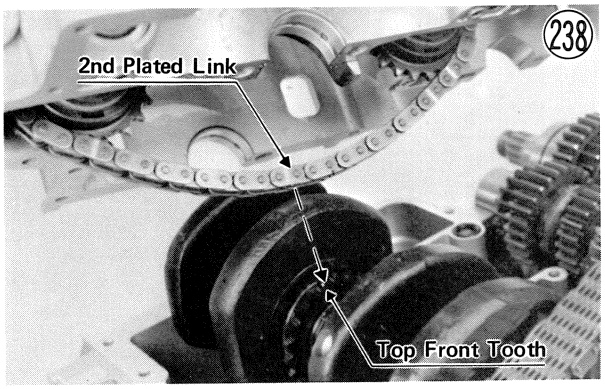

●Install and tighten lightly the 10 mm lower crankcase half bolts (6) and check that the arrow on the lower crankcase points to the mark on the flywheel (Fig. 239).

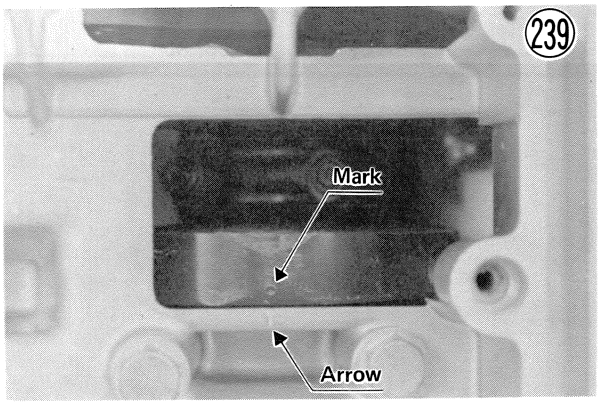

●Check that the arrow beside the timing inspection hole points to the mark on the rear balancer weight, and that the marks on the front balancer weight shaft align with the mark on the lower crankcase (Fig. 240). If the three timing mark pairs are not aligned at the same time, lift off the lower crankcase half and correct the timing.
●Remove the metal wire or 4 mm screw that holds the ratchet pin in the balancer chain tensioner body.
●Install and tighten lightly the 6 mm lower crankcase half bolts (17). Tighten the 10 mm bolts (6) first with 3.7～4.3 kg-m (27～31 ft-lbs) of torque, following the tightening sequence numbers on the lower crankcase half. Next tighten the 6 mm bolts (17) in the sequence shown in Fig. 241 with 0.9～1.1 kg-m (78～95 in-lbs) of torque.

Balancer Chain Timing

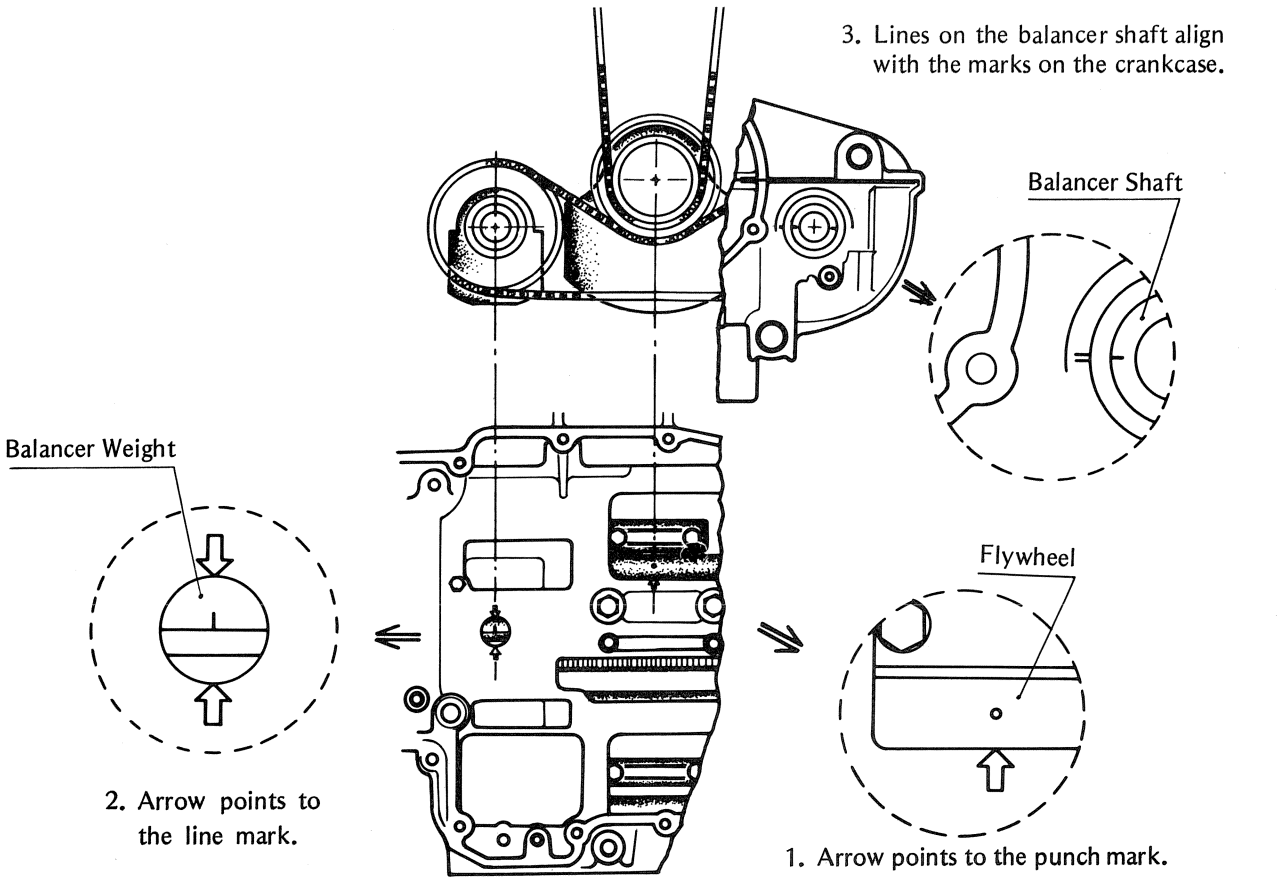

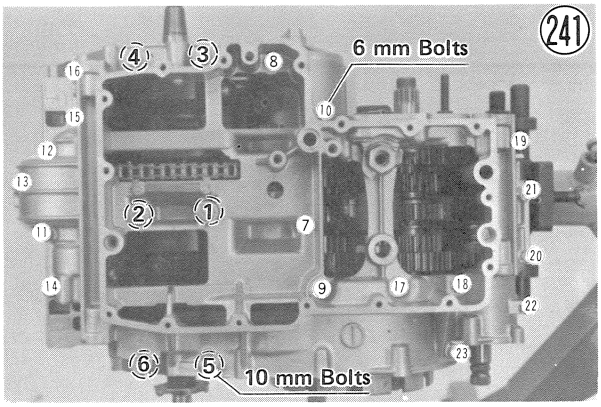

- Apply a little engine oil on the **O** ring and install the blind cap and washer, and tighten the blind cap stopper bolt.
- Apply a little engine oil to the shift rod and shift fork fingers, insert the shift rod running it through the output shaft 5th gear shift fork, and then through the output shaft 4th gear shift fork, fitting each shift fork guide pin into the shift drum groove.

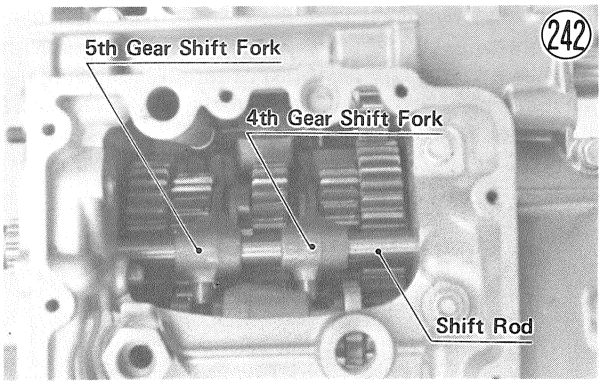

NOTE: Identification of the shift fork ('76 and '77 models)

4th gear shift fork: two fingers have the same length.
5th gear shift fork: one of two fingers is longer than the other and bends about 30° inward.

For '78 and later models, these two shift forks are identical.

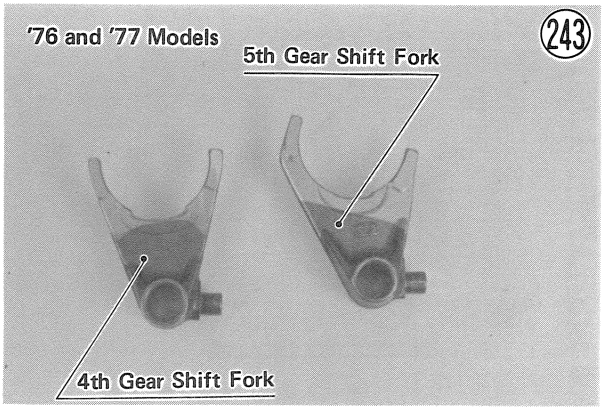

- Check to see that the drive shaft and output shaft turn freely, and, spinning the drive shaft, shift the transmission through all gears to make certain there is no binding and that all gears shift properly.
- Install the shift drum positioning pin, spring, and bolt. Tighten the bolt securely with 3.2 ~ 3.8 kg-m (23~27 ft-lbs) of torque.
- Check to see that the oil pump knock pins (2) and the oil passage **O** ring are in place. Replace the **O** ring with a new one, if deteriorated or damaged.

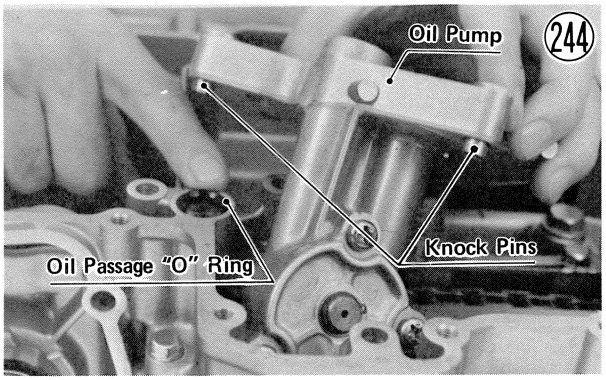

- Install the oil pump, making sure the oil pump gear and pump drive gear at the end of the balancer shaft mesh properly. Apply non-permanent locking agent to the engine oil pump bolts (3), and tighten them with 0.9 ~ 1.1 kg-m (78 ~ 95 in-lbs) of torque.
- Install a new oil pan gasket, and the oil pan with its mounting bolts (17). Tighten the bolts with 0.9 ~ 1.1 kg-m (78 ~ 95 in-lbs) of torque.
- Install the upper crankcase bolts (3, or 2 if the engine is set on the Kawasaki engine disassembly apparatus), and tighten them with 0.9 ~ 1.1 kg-m (78 ~ 95 in-lbs).
- Remove the timing advancer.
- Put on the thrust washer, clutch hub, and lock washer. Replace the clutch hub nut with a new one, screw on the nut and tighten it with 12 ~ 15 kg-m (87 ~ 108 ft-lbs) of torque, while holding the hub stationary with the clutch holder (special tool).

NOTE: The lock washer between the clutch hub and the clutch hub nut must be installed with the marked side, "OUT SIDE", facing out. See "WARNING" in Pg. 53.

- Install the friction plates (8) and steel plates (7), starting with a friction plate and alternating them.
- Insert the clutch push rod, steel ball, and spring palte pusher, applying a thin coat of a high temperature grease to their surfaces (Fig. 176).
- Install the spring plate, springs washers, and spring bolts (5 ea). Cross tighten the bolts evenly with 0.8 ~ 1.0 kg-m (69 ~ 87 in-lbs) of torque by hand (Fig. 177).

NOTE: The spring plate can be installed on the clutch hub in any position, so there is no mark on either the spring plate or the clutch hub.

- Check that the wire band in the engine cover crankshaft oil seal has not slipped out of its proper position and apply a high temperature grease to the oil seal lip (Fig. 178). If the oil seal is damaged, replace it with a new one.
- Check that the two knock pins are in place, and using a new right engine cover gasket, fit the right engine cover onto the crankcase. Tighten the screws (12) firmly. Be sure to include the contact breaker lead clamps with their right engine cover screws.

- Fit the timing advancer onto the crankshaft matching its notch with the pin in the end of the crankshaft (Fig. 168), and install the crankshaft rotation nut and the advancer mounting bolt. The notches in the nut fit the projections on the timing advancer. Tighten the bolt with 2.3 ~ 2.7 kg-m (16.5 ~ 19.5 ft-lbs) of torque.
- Mount the contact breaker plate, and tighten its screws (3) loosely. Each screw has a lock washer and flat washer.

NOTE: These screws will be tightened securely during ignition timing adjustment.

- Turn the kick shaft clockwise until it stops, and insert one end of the spring into the crankcase hole.
- Using needle nose pliers, insert the other end into the kick shaft, and while holding the spring in place, insert the kick spring guide.
- Check to see that knock pins (2) are in place, and using a new kick shaft cover gasket, fit the cover onto the crankcase. Use the kick shaft oil seal guide (special tool) to protect the kick shaft oil seal (Fig. 200). Tighten the cover screws (4).
- Install the kick pedal in the position marked during disassembly, and then tighten the bolt.
- Check that the external shift mechanism return spring pin is not loose. If it is loose, remove it, apply non-permanent locking agent to the threads, re-install it, and tighten the locknut.

NOTE: The return spring pin must be screwed in until it protrudes approximately 20 mm from the crankcase, so that it can work satisfactorily as an external shift mechanism lever stopper.

- Check that the external shift mechanism cover knock pins (2) are in place.
- Replace the output shaft **O** ring with a new one if it is damaged, and install it next to the ball bearing inner race.

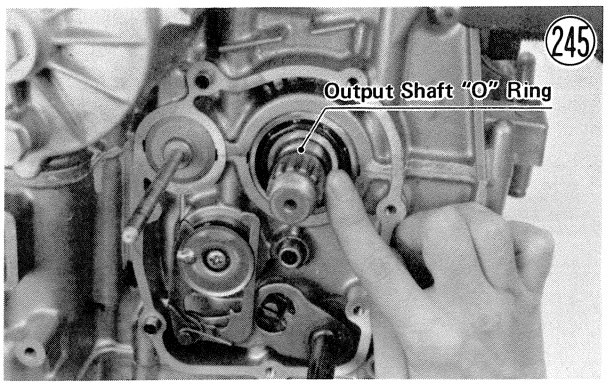

- Check that the return spring is properly fitted on the shaft (Fig. 195), mount the external shift mechanism, and place its arms on the shift drum pins.
- Apply a high temperature grease to the lips of the clutch push rod oil seal and the output shaft collar oil seal.
- Insert the shift shaft oil seal guide (special tool) in external shift mechanism cover oil seal (Fig. 196), and install the cover, and then tighten the screws (7).
- Install the output shaft collar.
- Install the engine sprocket chain guard.
- Clean the starter motor lugs and crankcase where the starter motor is grounded.
- Apply a little oil to the **O** ring and install the starter motor. Apply a non-permanent locking agent to the starter motor retaining bolts (2), and tighten the bolts.
- Install the starter motor sprockets and chain. The protruding side of the starter motor sprocket faces in (Fig. 154).
- Check to see that the thrust washer is at the rear of the dynamo rotor, using a high flash-point solvent clean off an any oil or dirt that may be on the crankshaft taper or rotor hub, and install the dynamo rotor and starter motor clutch assembly.
- Tighten the 10 mm bolt to 7.0 ~ 8.0 kg-m (51 ~ 58 ft-lbs) of torque while holding the dynamo rotor steady with the dynamo rotor holder (special tool). For 12 mm bolt, tighten it to 12 ~ 14 kg-m (87 ~ 101 ft-lbs) of torque.
- Using a new gasket and applying a liquid gasket to the wiring grommets, install the dynamo cover, gasket, and then tighten the screws (8).
- Fit the dynamo wiring between the crankcase and external shift mechanism cover.

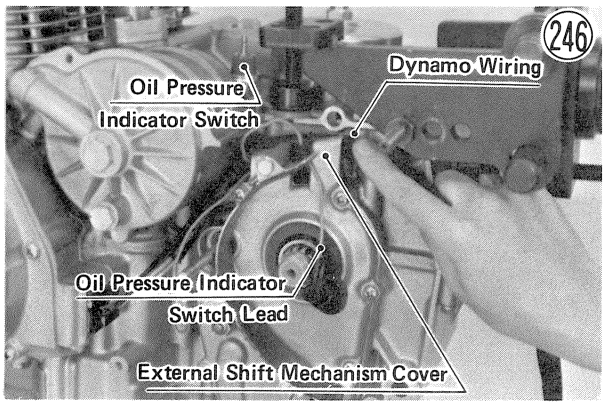

- Connect the oil pressure indicator switch lead (gray) to the switch.
- Connect the neutral indicator light switch lead (red) to the switch.

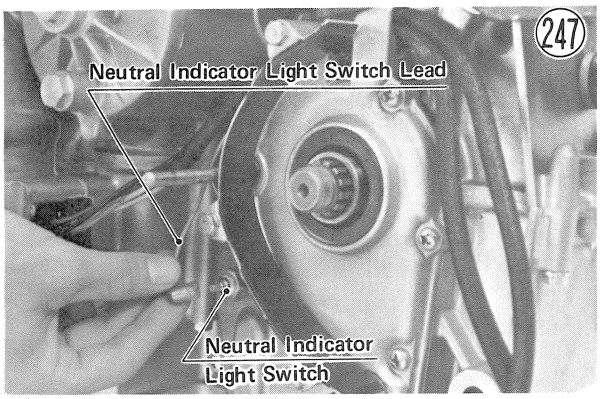

- Install the engine (Pg. 28).

NOTE: Before installing the engine, tighten the remaining upper crankcase bolt if not already tightened. Tightening torque of the bolt is 0.9 ~ 1.1 kg-m (78 ~ 95 in-lbs).

- Fill the engine with oil, check the oil level (Pg. 196), and add more if necessary.
- Carry out the adjustment procedures listed at the end of the engine installation section (Pg. 30).

Shift Drum, Output Shaft, Drive Shaft

(248)

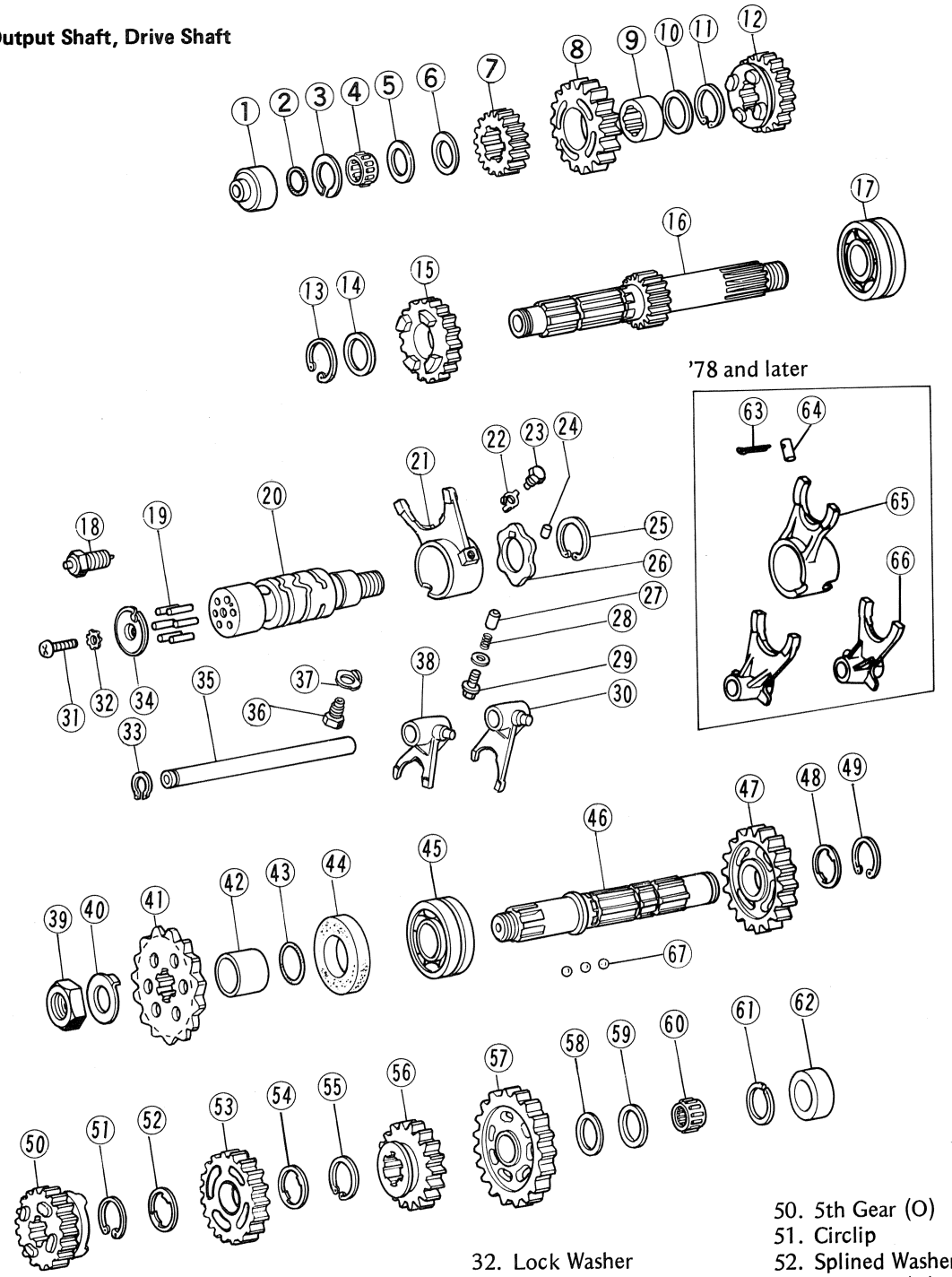

1. Needle Bearing Outer Race
2. O Ring
3. Circlip
4. Needle Bearing
5. Steel Washer
6. Copper Washer
7. 2nd Gear (D)
8. 5th Gear (D)
9. Copper Bushing
10. Washer
11. Circlip
12. 3rd Gear (D)
13. Circlip
14. Washer
15. 4th Gear (D)
16. Drive Shaft
17. Ball Bearing
18. Neutral Indicator Switch
19. Shift Drum Pin
20. Shift Drum
21. 3rd Gear Shift Fork
22. Washer
23. Shift Fork Guide Bolt
24. Operating Plate Pin
25. Circlip
26. Operating Plate
27. Positioning Pin
28. Spring
29. Positioning Bolt
30. 4th Gear Shift Fork
31. Screw
32. Lock Washer
33. Circlip
34. Shift Drum Pin Plate
35. Shift Rod
36. Shift Drum Guide Bolt
37. Washer
38. 5th Gear Shift Fork
39. Nut
40. Splined Washer
41. Engine Sprocket
42. Collar
43. O Ring
44. Oil Seal
45. Ball Bearing
46. Output Shaft
47. 2nd Gear (O)
48. Splined Washer
49. Circlip
50. 5th Gear (O)
51. Circlip
52. Splined Washer
53. 3rd Gear (O)
54. Splined Washer
55. Circlip
56. 4th Gear (O)
57. 1st Gear (O)
58. Copper Washer
59. Steel Washer
60. Needle Bearing
61. Circlip
62. Needle Bearing Outer Race
63. Cotter Pin
64. Guide Pin
65. 3rd Gear Shift Fork
66. 4th and 5th Gear Shift Fork
67. Steel Ball

Shift Drum Disassembly:

- Drop out the operating plate pin ㉔.
- Remove the shift drum pin plate ㉞. The screw ㉛ has a lock washer ㉜.
- Pull out the pins ⑲ (6).

Shift Drum Assembly Notes:

1. Apply a non-permanent locking agent to the pin plate screw ㉛.
2. The long shift drum pin must be in the position shown in Fig. 249. If the pin is assembled in the wrong position, the neutral indicator light will not light when the gears are in neutral.

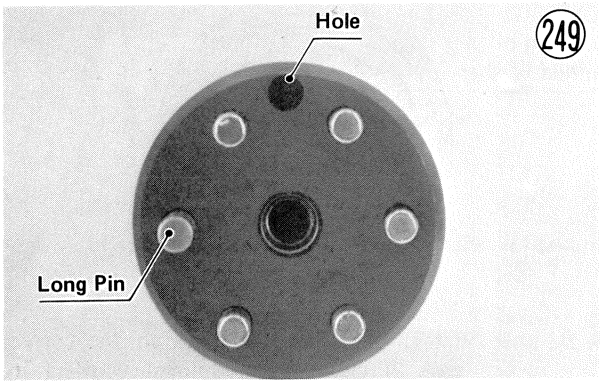

249

Drive Shaft Disassembly:

- Pull off the clutch housing and the needle bearing from the drive shaft assembly.
- Pull off the drive shaft sleeve and spacer.
- Remove the needle bearing outer race ①.
- Remove the circlip ③ and pull off the needle bearing ④, steel washer ⑤, and copper washer ⑥.
- Pull off 2nd gear ⑦, 5th gear ⑧, the copper bushing ⑨, and washer ⑩.
- Remove the circlip ⑪, and pull off 3rd gear ⑫.
- Remove the circlip ⑬, and pull off the washer ⑭ and 4th gear ⑮.
- Remove the ball bearing ⑰ using the stem bearing puller and adapter (special tools).

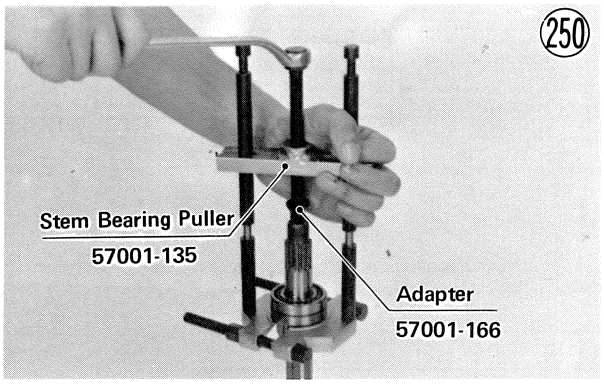

250

Drive Shaft Assembly Notes:

1. Install the drive shaft ball bearing using the transmission circlip driver (KZ400 special tool).

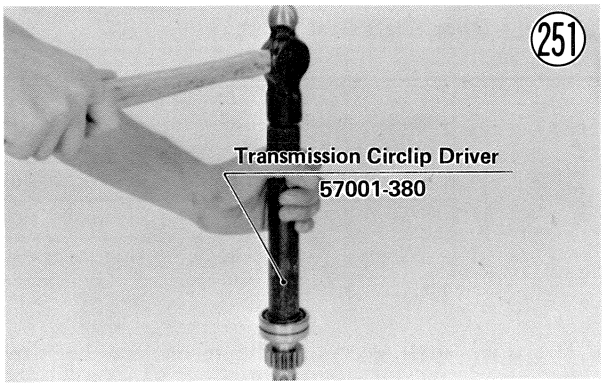

251

2. Replace any circlips that were disassembled with new ones, and install the circlip so that the opening coincides with one of the splined grooves in the drive shaft.

Circlip Installation onto Drive Shaft

252

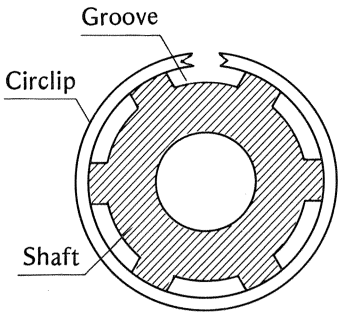

3. When assembling the 5th gear copper bushing to the drive shaft, align its oil holes with the holes in the shaft.
4. The clutch housing spacer must be installed with its flat side facing toward the end of the shaft.

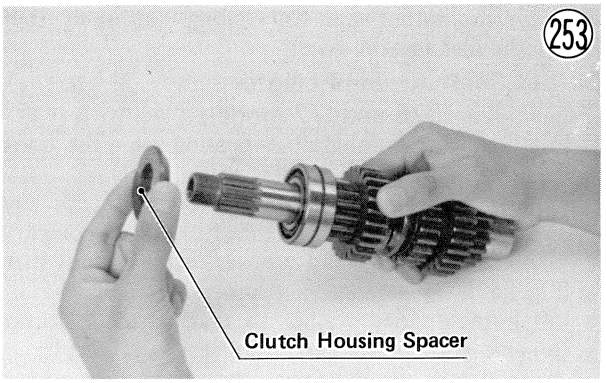

253

5. Be sure that all parts are put back in the correct sequence and all circlips and flat washers are properly in place. Proper sequence starting with 1st gear (part of drive shaft) is 1st gear, 4th gear, washer, circlip, 3rd gear, circlip, washer, copper bushing, 5th gear, 2nd gear, copper washer, steel washer, needle bearing, circlip, needle bearing race. At the other end of the shaft, install the spacer, drive shaft sleeve, needle bearing, and clutch housing.

Table 3 Drive Shaft Gear Chart

Sequence of Installation ↓	Gear	Engage Type	No. of Teeth
	1	Part of drive shaft	15
	4	Dogs, dogs face left	25
	3	Double dogged, tooth side dogs face right	22
	5	Dog recesses, recessed side faces right	27
	2	No dogs, no dog recesses, chamfered side faces right	19

6. The drive shaft gears can be recognized by size, the gear with the smallest diameter being 1st gear, and the largest one being 5th gear.

Drive Shaft Gears (254)

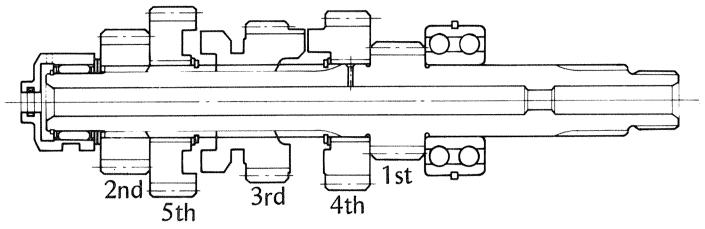

Output Shaft Disassembly ('76 and '77 models):

NOTE: See Pg. 217 for 1978 and later models.

- Pull off the needle bearing outer race ⑫.
- Remove the circlip ⑪, and pull off the needle bearing ⑩, steel washer ⑨, and copper washer ⑧.
- Pull off 1st gear ⑦ and 4th gear ⑥.
- Remove the circlip ⑤, and pull off the splined washer ④, 3rd gear ③, and another splined washer ②.
- Remove the circlip ①, and pull off 5th gear ⑩.
- Remove the circlip ⑨, and pull off the splined washer ⑧ and 2nd gear ⑦.
- Remove the output shaft ball bearing ⑤ using the stem bearing puller (special tool).

Output Shaft Assembly Notes ('76 and '77 models):

1. Install the output shaft ball bearing using the transmission circlip driver (KZ400 special tool).
2. Replace any circlips that were removed with new ones. Install the circlip so that its opening coincides with one of the splined grooves in the output shaft (Fig. 252).
3. Install the splined washer so that its teeth do not coincide with the circlip opening.

Circlip, Splined Washer Installation onto Output Shaft (255)

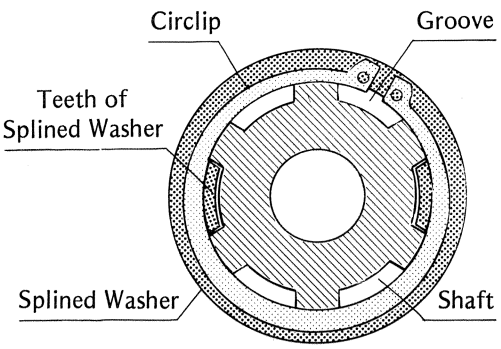

4. Be sure that all parts are put back in the correct sequence and all circlips and splined washers are properly in place. Proper sequence starting with the engine sprocket side is 2nd gear, splined washer, circlip, 5th gear, circlip, splined washer, 3rd gear, splined washer, circlip, 4th gear, 1st gear, copper washer, steel washer, needle bearing, circlip, and needle bearing outer race.
5. The output shaft gear sizes are opposite from those of the drive shaft gears, the largest being 1st gear and the smallest, 5th gear.

Output Shaft Gears (256)

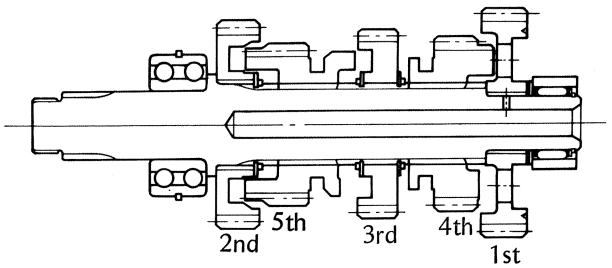

Table 4 Output Shaft Gear Chart

Sequence of Installation ↓	Gear	Engage Type	No. of Teeth
	2	Dog recesses, plain side faces left	31
	5	Double dogged, tooth side dogs face left	24
	3	Dog recesses, dog recesse side faces left	28
	4	Dogged, dogged side faces right	26
	1	Dog holes, V grooved side faces right	35

KICKSTARTER

Removal:

- Split the crankcase as explained in transmission removal (Pg. 60). The transmission itself does not require removal.
- Remove the kick shaft from the upper crankcase half.

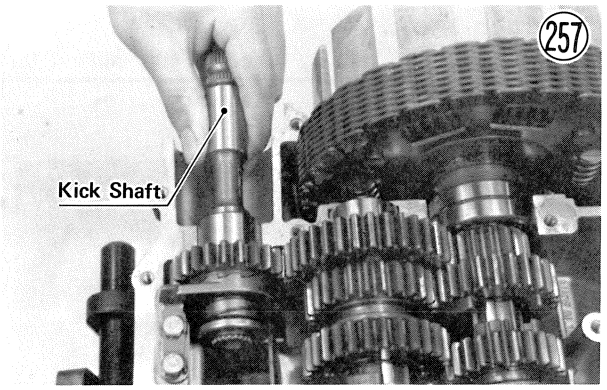

Kickstarter

258

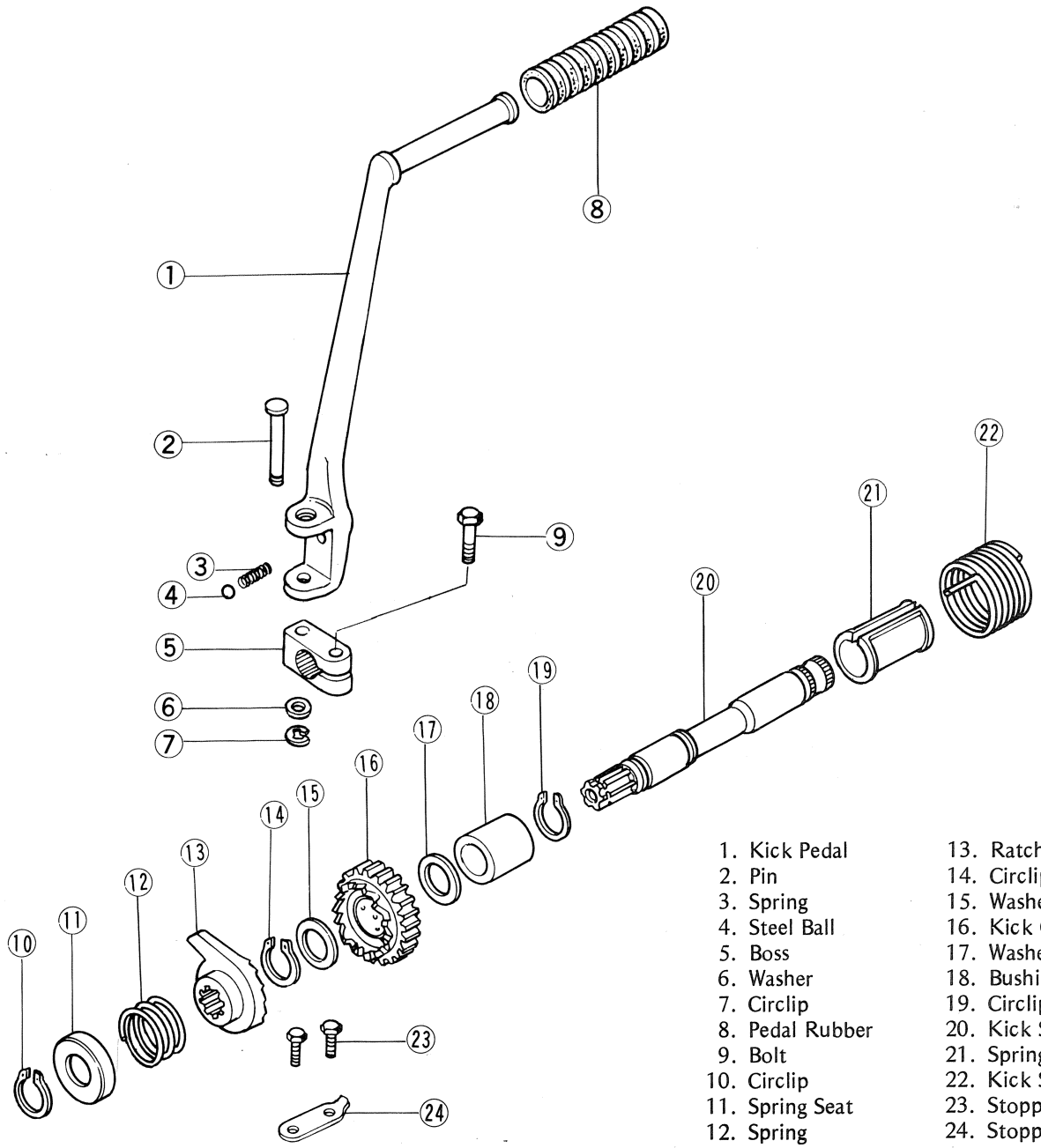

1. Kick Pedal
2. Pin
3. Spring
4. Steel Ball
5. Boss
6. Washer
7. Circlip
8. Pedal Rubber
9. Bolt
10. Circlip
11. Spring Seat
12. Spring
13. Ratchet Gear
14. Circlip
15. Washer
16. Kick Gear
17. Washer
18. Bushing
19. Circlip
20. Kick Shaft
21. Spring Guide
22. Kick Spring
23. Stopper Bolt
24. Stopper

Installation Note:

●Fit the kick shaft bushing hole with the pin on the upper crankcase.

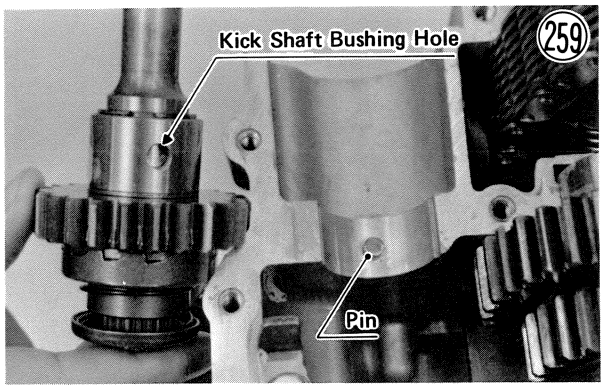

Kickstarter Disassembly:

●Straighten out the lock washer ㉔ ends which are bent over the side of the ratchet gear arm stopper bolts ㉓, and remove the stopper ㉕.
●Remove the circlip ⑩ on the kick shaft end, and take off the spring seat ⑪, spring ⑫, and ratchet gear ⑬.
●Remove the circlip ⑭, and pull off the washer ⑮, kick gear ⑯, washer ⑰, and kick shaft bushing ⑱. Remove the circlip ⑲.

Kickstarter Assembly Notes:

1. Install the ratchet gear arm stopper in the direction shown in the figure. To prevent the stopper bolts (2) from loosening, apply a non-permanent locking agent to their threads, or use a new lock washer. After tightening them to 0.9 ~ 1.1 kg-m (78 ~ 95 in-lbs) of torque, be sure to bend the ends of the lock washer over the stopper bolts.

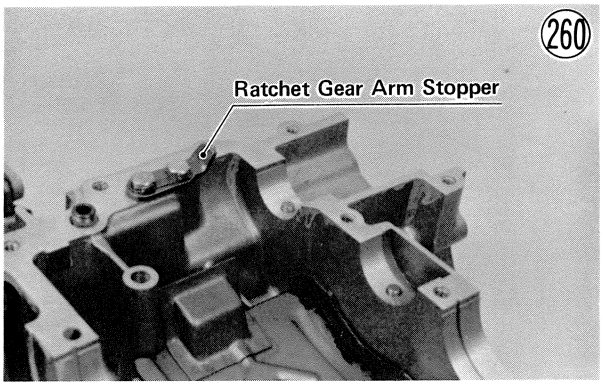

2. Apply a little engine oil to the inside of the bushing, kick gear, and ratchet gear before installation.
3. When installing the ratchet gear, align the ratchet gear punch mark with the punch mark on the kick shaft.

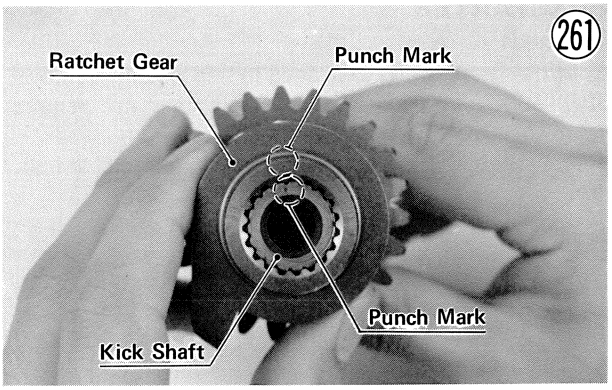

OIL PRESSURE RELIEF VALVE

Removal:

●Split the crankcase as explained in transmission removal (Pg. 60). The transmission itself does not require removal.
●Unscrew the valve from the upper crankcase half.

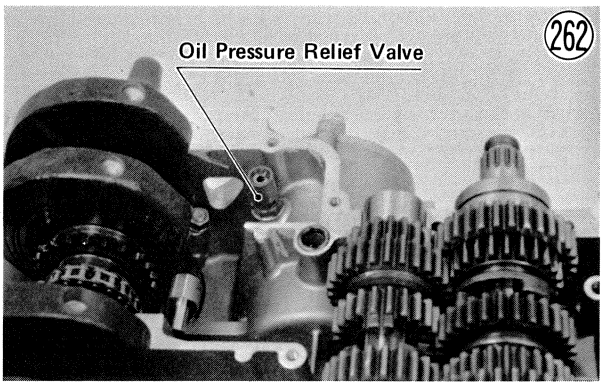

Installation Note:

●Apply a non-permanent locking agent to the valve threads, and tighten it to 1.3 ~ 1.7 kg-m (9.5 ~ 12.0 ft-lbs) of torque.

Disassembly (piston type):

NOTE: From later 1977 model, a ball type relief valve is used in place of the piston type relief valve. Do not disassemble the ball type relief valve for inspection. Replacement parts are not available.
●Remove the circlip, and take out the washer, spring, and valve piston.

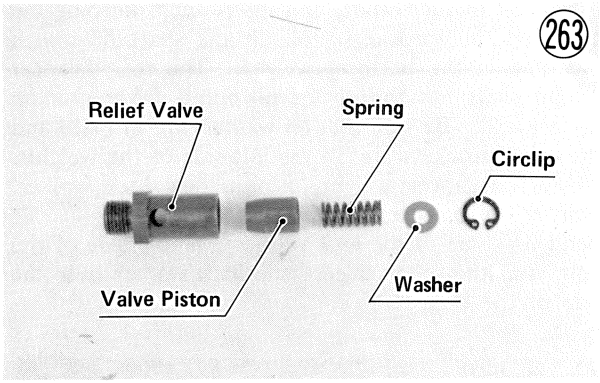

BALANCER MECHANISM

Removal:

- Split the crankcase as explained in transmission removal (Pg. 60). The transmission itself does not require removal if only the balancer mechanism is to be removed.
- Straighten out the lock washer ends which are bent over the side of the balancer weight bolts (2), and remove the bolts and lock washers (2).

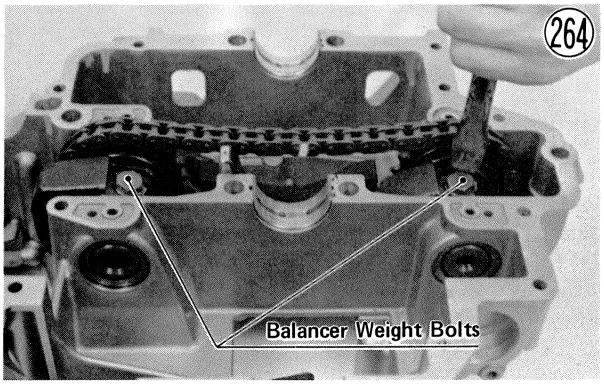

- Push out the rear balancer shaft toward the engine right side, and remove the rear balancer weight with the washers (3).
- Pull out the front balancer shaft using the 10 mm crankcase lower mounting bolt, and remove the front balancer weight with the washers (3).

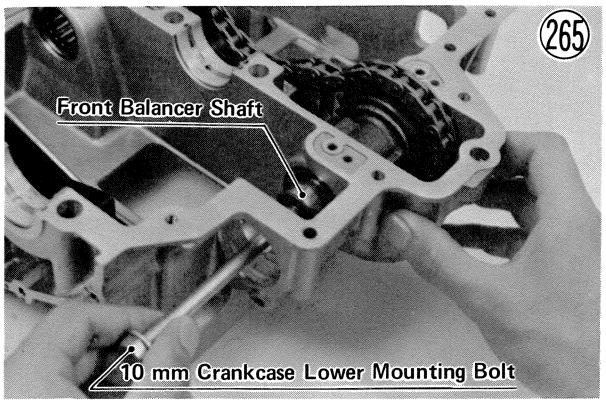

- Straighten out the lock washer ends which are bent over the side of the balancer chain tensioner bolts (2), and remove the bolts, lock washer, balancer chain tensioner assembly, and balancer chain.

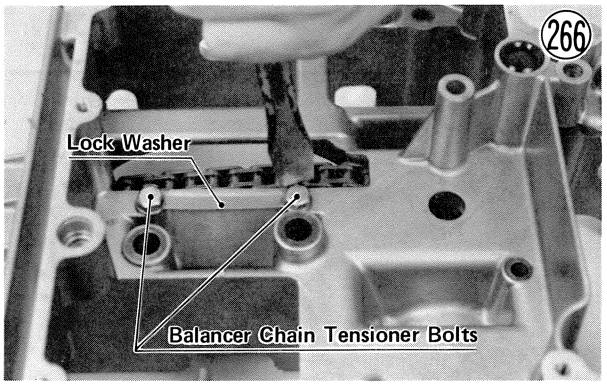

- To remove the balancer shaft needle bearings (4), first screw out the Allen set screws (4), and then drive out the needle bearings using the shift drum bearing driver (special tool). For the front left needle bearing, pull it out using a suitable tool.

NOTE: In the absense of the above mentioned special tool and a suitable tool, satisfactory results may be obtained by heating the case (in the area immediately surrounding the needle bearing) to 120~150°C (248~302°F), pull out the bearing using a hook.

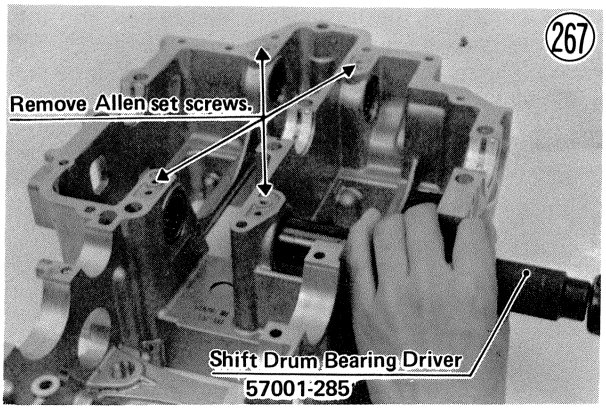

Installation:

- If the balancer shaft needle bearings were removed, install a new needle bearing using the shift drum bearing driver (special tool) to drive it in. Be sure that the groove on the bearing outer race matches with the Allen set screw hole, and finger tighten the Allen set screw.

NOTE: Drive the needle bearing in, so that the chamfered side of the needle bearing outer race goes ahead to prevent the outer race from eating in the crankcase hole.

CAUTION

1. **To prevent the distortion of the needle bearing outer race, never over tighten the Allen set screws.**
2. **After finger tightening the Allen set screws, check that the set screws sink approximately 0.2 mm into the crankcase mating surface.**

   In case an Allen set screw protrudes from the crankcase mating surface, check and align the outer race groove with the Allen set screw hole, otherwise the protruding set screw will prevent the crankcase halves from contacting perfectly.

Balancer Needle Bearing Set Screw

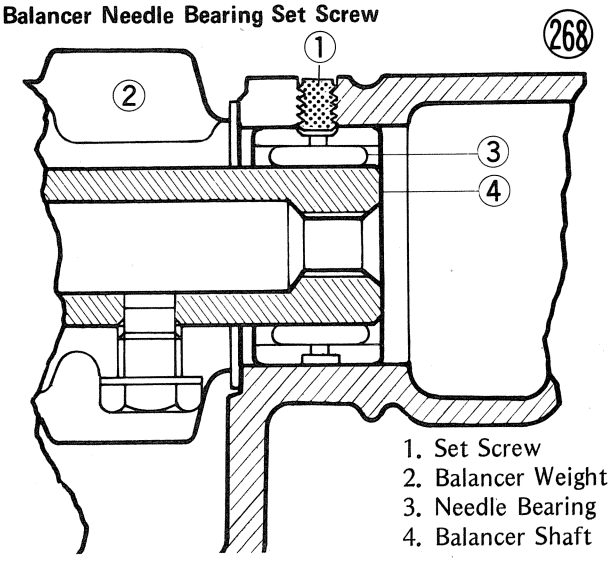

- Install the balancer chain. The balancer chain plated links must face the engine clutch side.

NOTE: The balancer chain tensioner assembly must be installed before installing the lower crankcase half on the upper crankcase half.

- If the balancer chain or chain tensioner is replaced with a new one, push the ratchet pin all the way into the tensioner body by working the pin back and forth, and turn a 4 mm screw (thread pitch 0.7 mm) into the tensioner body to hold the ratchet pin in position.

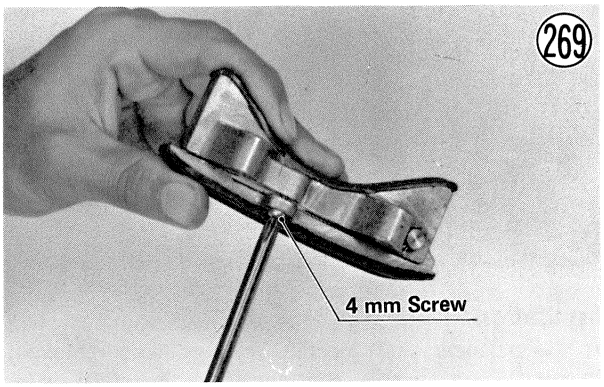

- At each balancer weight, install the washers (3) on the balancer weight sides. The washer with four teeth goes next to the sprocket, with its teeth facing in.

NOTE: Both front and rear balancer weights and sprockets are identical.

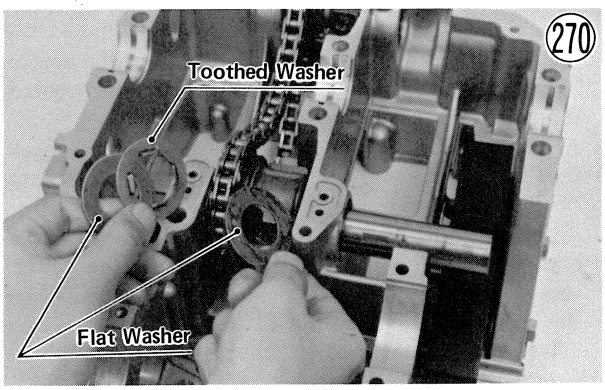

- Apply oil to each shaft, and insert them keeping the chain on the sprockets. Match the shaft hole with the hole in the balancer weight. The rear balancer weight shaft has the engine oil pump driver gear on its left end. Be sure that all washers are in place and that the sprockets are on the left side of the weights.
- At each balancer weight, using a new lock washer, tighten the balancer weight bolt securely.
- Bend one side of the lock washer over the side of the bolt, and the other side of the lock washer over the side of the balancer.

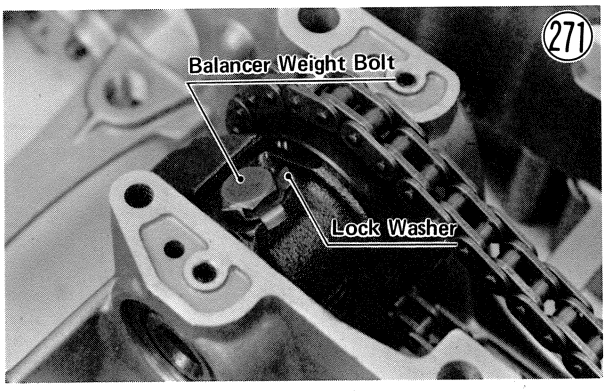

- Fit the chain on the sprockets properly. For the front sprocket, the chrome plated link must fit on the sprocket tooth with the punch mark. For the rear sprocket, the link between two chrome plated links must fit on the sprocket tooth with the punch mark.

NOTE: There are four plated links, and, with the chain in the position mentioned above, the 2nd plated link counted from the front will be located on the crankshaft side.

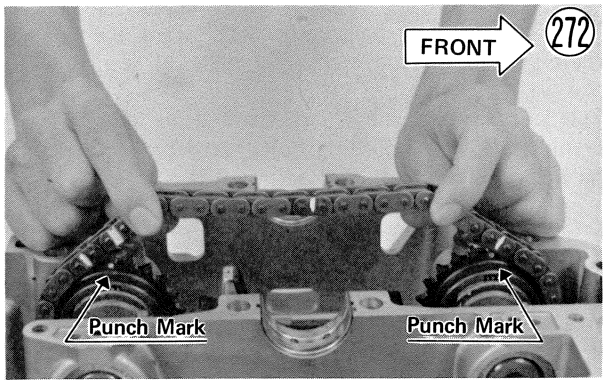

- Fit the crankcase as explained in transmission installation (Pg. 64).

Balancer Weight Disassembly (each balancer unit):

- Remove the circlip ⑤, and take off the washer ⑥.
- Tapping lightly with a mallet, separate the sprocket ⑦ and balancer weight ⑩. The springs ⑨ and pins ⑧ (4 ea) may be removed.

Balancer Mechanism

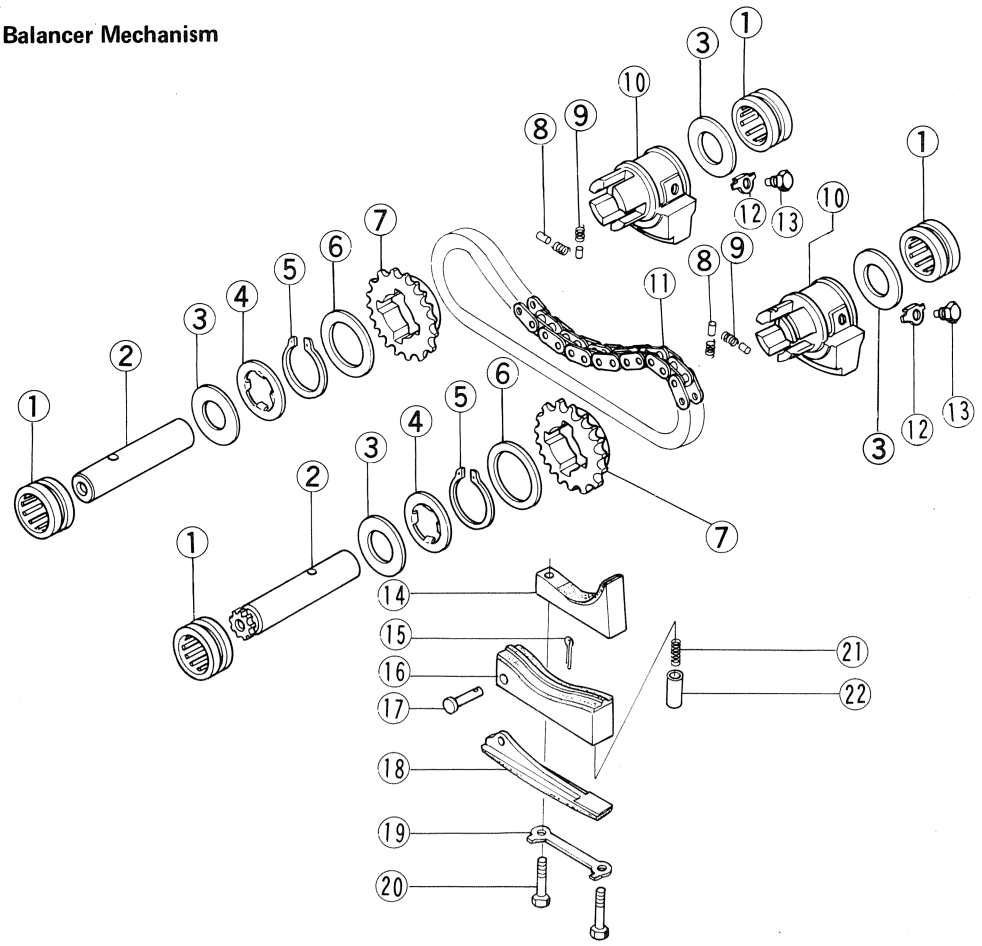

1. Needle Bearing
2. Balancer Shaft
3. Washer
4. Splined Washer
5. Circlip
6. Washer
7 Sprocket
8. Pin
9. Spring
10. Balancer Weight
11. Balancer Chain
12. Lock Washer
13. Bolt
14. Chain Guide
15. Cotter Pin
16. Tensioner Body
17. Pin
18. Chain Guide
19. Lock Washer
20. Bolt
21. Spring
22. Tensioner Pin

Balancer Weight Assembly (each balancer unit):

- With the springs and pins (4 ea) all in place in the inner circumference of the balancer weight, install the sprocket. The punch mark on the sprocket must face in (balancer weight side), with the sprocket positioned as depicted in Fig. 274. Only one of the four positions is correct, and that is with the punch mark opposite the weight.

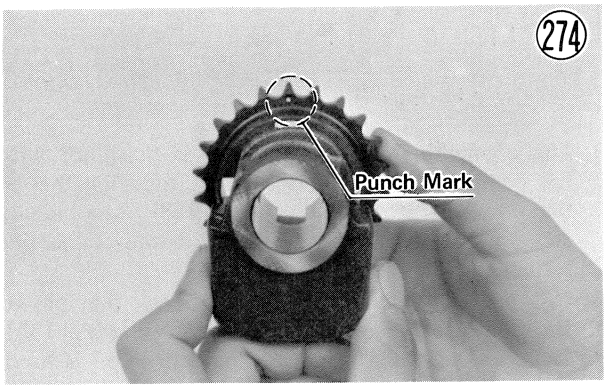

- Put on the washer and circlip. Use a new circlip if it is deformed or otherwise damaged during removal.
- Move each spring to the furthest point outward in its space so that the springs will not hinder insertion of the balancer shaft through the weight.

Balancer Chain Tensioner Disassembly:

- Remove the cotter pin ⑮, pull out the pin ⑰, and remove the chain guide ⑱.
- Pull out the tensioner pin ㉒, spring ㉑.

Balancer Chain Tensioner Assembly Note:

- Insert a new cotter pin through the pin after assembling the chain tensioner assembly, and spread out its ends.

CRANKSHAFT (Including connecting rods), CAMSHAFT CHAIN, AND PRIMARY CHAIN

Removal:

- Remove the engine (Pg. 23).
- Set the engine on a clean surface or, preferably, into a disassembly apparatus with some means of holding the engine steady while parts are being removed.

NOTE: If the engine is to be set onto the Kawasaki engine disassembly apparatus, the one of the upper crankcase half bolts (3) shown in Fig. 208 must be removed before positioning the engine.

- Remove the camshafts as explained in camshaft removal (Pg. 37).
- Remove the cylinder block (Pg. 43).
- Remove the pistons (Pg. 44).
- Remove the transmission (Pg. 60).
- Lift off the crankshaft with the camshaft chain and primary chain.

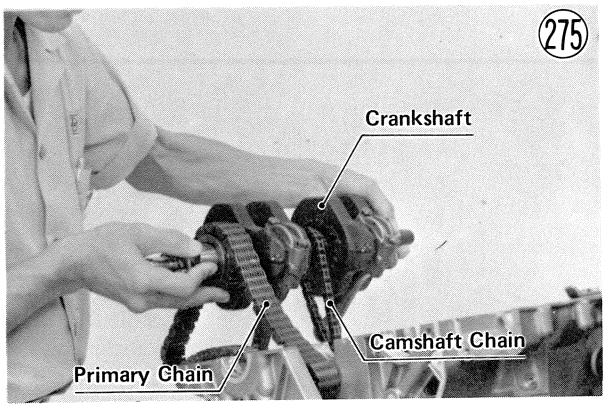

- Remove the camshaft chain from the crankshaft.
- Remove the primary chain.

Installation:

NOTE: If a new crankshaft and/or connecting rod is used, select the proper bearing insert in accordance with the combination of connecting rod and crankshaft marks (Fig. 279, Table 5).

- Apply engine oil to the crankshaft bearing inserts.
- Fit the camshaft chain and primary chain back onto their sprockets and set the crankshaft back in its place on the upper crankcase half while engaging it with the primary chain. The camshaft chain sprocket on the crankshaft is smaller than the balancer sprocket.

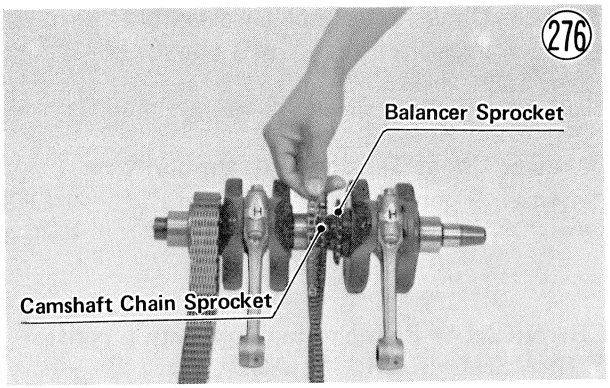

- Assemble the crankcase as explained in transmission installation (Pg. 64).
- Install the pistons (Pg. 45).
- Install the cylinder block (Pg. 43).
- Install the camshafts (Pg. 38).

NOTE: The cylinder head cover must be installed after engine installation on the motorcycle.

- Install the engine (Pg. 28).
- Fill the engine with oil, check the oil level (Pg. 196), and add more if necessary.
- Carry out the adjustment procedures listed at the end of the engine installation section (Pg. 30).

CONNECTING ROD

Removal (each side):

- Remove the crankshaft (Pg. 77).
- Remove the nuts (2) and pull off the connecting rod big end cap.

CAUTION **Do not allow the big end cap bolts to bump against the crankshaft journals to prevent damage.**

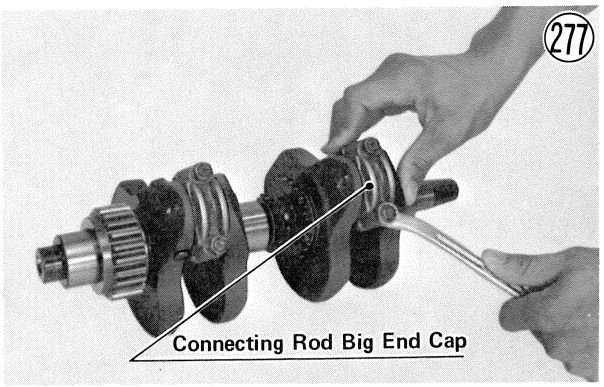

- Remove the rod bearing insert halves from the connecting rod big end and the big end cap.

Installation Notes:

1. Apply engine oil to the rod bearing inserts.
2. When installing new connecting rods, use connecting rods having the same weight mark. This weight mark, indicated using a capital letter, is stamped on the connecting rod big end.

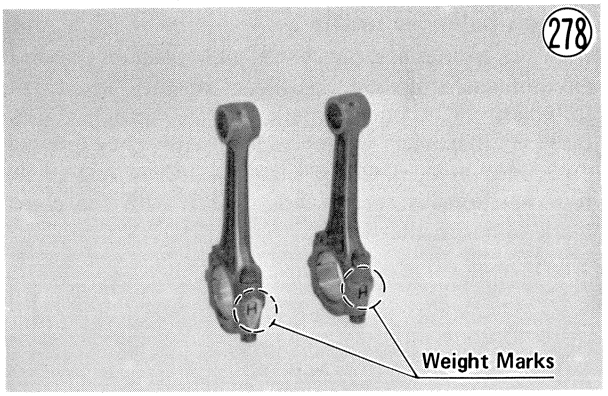

3. The connecting rod big end cap is machined with the connecting rod as a set, so fit them together so that the weight marks align (Fig. 278). The big end cap must be replaced together with the connecting rod as a set.
4. If a new connecting rod is used, check that pin to small end clearance has the specified value (Pg. 131).
5. If a new crankshaft and/or connecting rod is used, select the right rod bearing insert in accordance with the combination of the connecting rod and the crankshaft marks (Fig. 279). If the connecting rod only is replaced with a new one, first measure the diameter of the crank pin, mark its flywheel in accordance with the diameter (Pg. 134), and then select the right bearing insert in accordance with Table 5.

Table 5 Bearing Insert Selection

Crank-shaft marking \ Con-Rod marking	1	Unmarked
1	Black PN 13034-043	Brown PN 13034-046
Unmarked	Blue PN 13034-045	Black PN 13034-043

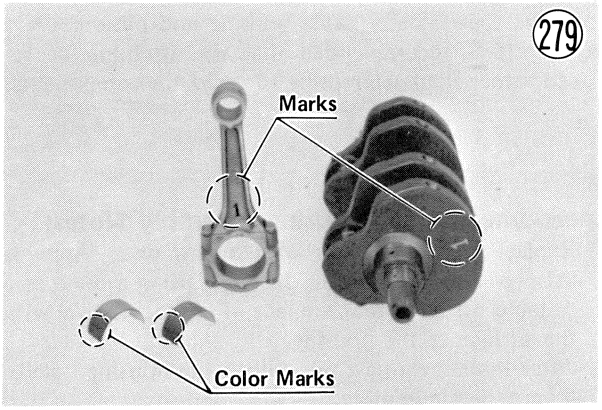

6. Apply a little molybdenum disulfide grease for engine assembly to the big end bolt threads. Hand tighten both nuts first, and then tighten each nut with 3.6~4.0 kg-m (26~29 ft-lbs) of torque.

CAUTION Replace the big end bolts and nuts with new ones, whenever they are removed or just loosened. Use only Kawasaki big end bolts and nuts, as these are very important parts.

CAMSHAFT CHAIN GUIDE (Front)

Removal:

- Remove the crankshaft (Pg. 77).
- Remove the camshaft chain guide holder bolts (2), and remove the chain guide.

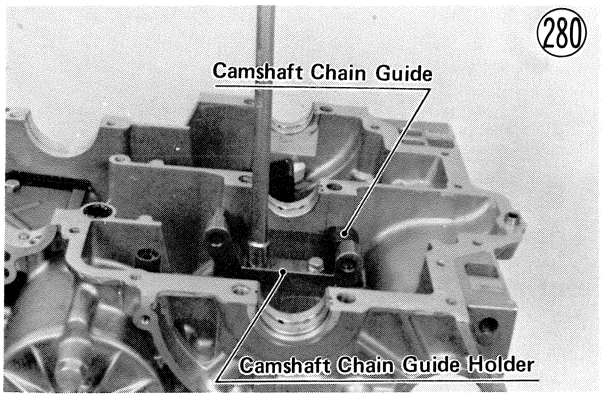

Assembly Note:

- Apply a non-permanent locking agent to the holder bolt threads, and tighten the holder bolts with 1.1 ~ 1.3 kg-m (95 ~ 113 in-lbs) of torque.

CAMSHAFT CHAIN GUIDE (Rear)

Removal:

- Remove the cylinder block (Pg. 43).
- Remove the chain guide.

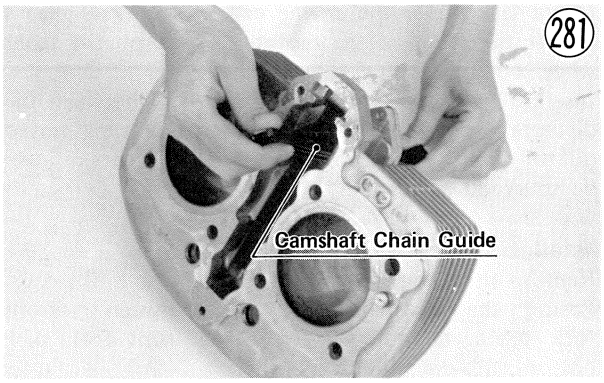

CAMSHAFT CHAIN GUIDE (Top)

Removal:

- Remove the cylinder head cover as explained in camshaft removal (Pg. 37).
- Remove the Allen bolts and copper washers (2 ea), and remove the camshaft chain guide.

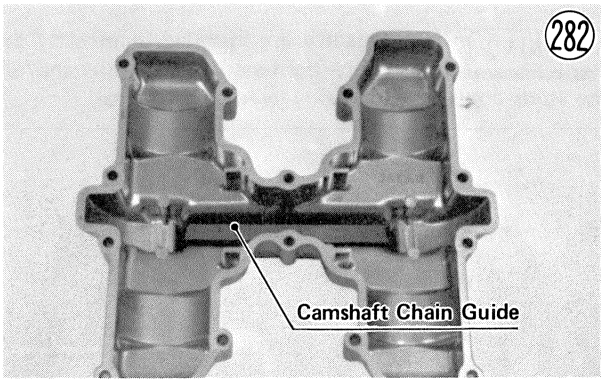

FRONT WHEEL

Removal:

- Disconnect the lower end of the speedometer cable with pliers.

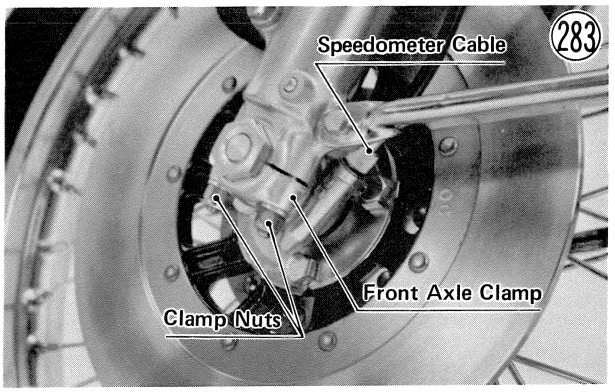

- Loosen the front axle clamp nuts (4) but do not remove them. Then loosen the front axle nuts (2).
- Remove the front axle clamp nuts, lock washers, and clamps.

- Use a jack under the engine or other suitable means to lift the front of the motorcycle. Drop the front wheel out of the forks, and remove it.
- Insert a wood wedge (7 ~ 8 mm thick) between the disc brake pads this prevents them from being moved out of their proper position, should the brake lever be squeezed accidentally.

Installation:

- Remove the wedge from between the disc brake pads.
- Position the front wheel in its place between the front fork tubes, and slowly lower the front fork tube bottom ends onto the front axle.
- Mount the front axle clamps, and tighten the nuts loosely. The arrow at the bottom of the clamp must point to the front Fig. 284.
- Tighten the axle nuts with 7 ~ 9 kg-m (51 ~ 65 ft-lbs) of torque, and position the speedometer housing by turning it counterclockwise until it stops.
- Tighten first the front axle clamp nut and then the rear nut with 1.6 ~ 2.2 kg-m (11.5 ~ 16.0 ft-lbs) of torque. There will be a gap at the rear of the clamp after tightening.

WARNING **If the clamps are installed incorrectly or improperly tightened, the clamps and/or the studs could fail, resulting in loss of control.**

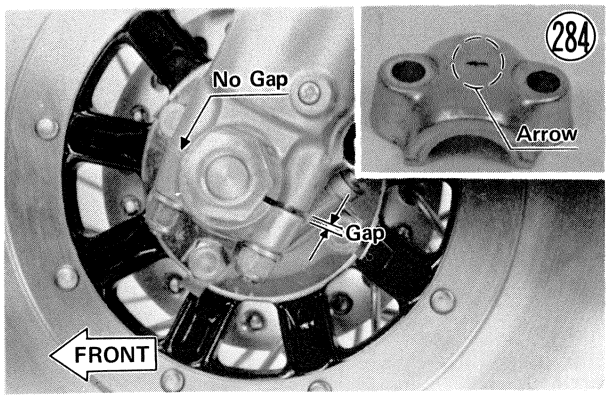

- Insert the speedometer inner cable into the housing while turning the wheel so that the slot in the end of the cable will seat in the tongue of the speedometer pinion, and tighten the cable nut with pliers.

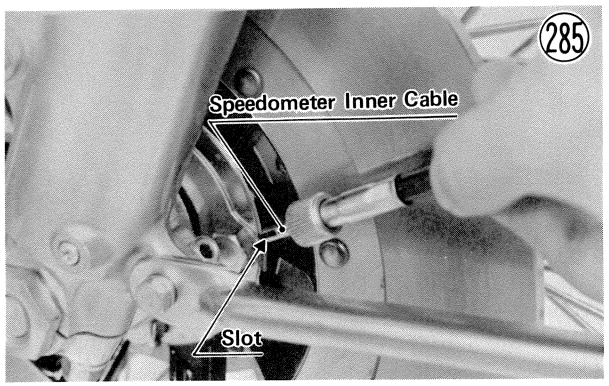

Speedometer Gear Housing Disassembly:

- Remove the left axle nut ①, and pull the speedometer gear housing ② off the hub ⑰.
- Pull out the grease seal ④ using a hook.
- Pull out the speedometer gear ③.
- If the speedometer cable bushing ⑩ or speedometer pinion ⑧ needs to be removed, first drill the housing through the pin ⑥ using a 1 mm drill bit. Drill the housing from the gear side using a 2 mm drill bit. Using a suitable tool, tap out the pin, and then pull out the speedometer cable bushing and pinion.

NOTE: It is recommended that the assembly be replaced rather than attempting to build the components.

Speedometer Gear Housing Assembly Notes:

1. Replace the grease seal with a new one. Apply a little grease to the seal. Install it using a press or a suitable driver so that the face of the seal is level with the surface of the housing.
2. After inserting a new pin, punch the housing hole to secure the pin in place.
3. Regrease the speedometer gear.
4. Install the speedometer gear housing so that it fits in the speedometer gear drive notches (Fig. 286). When properly fitted, the clearance between the speedometer gear housing and the gear drive holding plate is a little less than 3 mm.

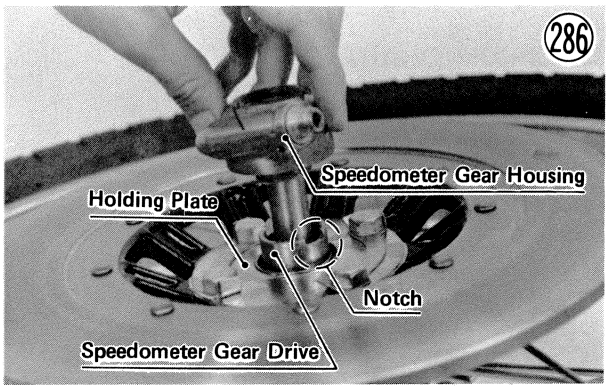

Front Hub Disassembly (including disc removal):

- Remove the disc side axle nut ①, and pull off the speedometer gear housing ②.
- Straighten the part of the disc double washers ⑫ that are bent over the disc bolts ⑪ (4). Remove the bolts, double washers (2), speedometer gear drive holding plate ⑬, speedometer gear drive ⑤, and disc ⑭.
- Pull out the axle ㉔ along with the right axle nut ㉖, and remove the collar ㉕.
- Remove the screws ㉓ (2) and washers ㉒ (2), and take the cap ㉑ off the right side of the hub.
- Using a hook, pull out the grease seal ⑳ and remove the circlip ⑲.

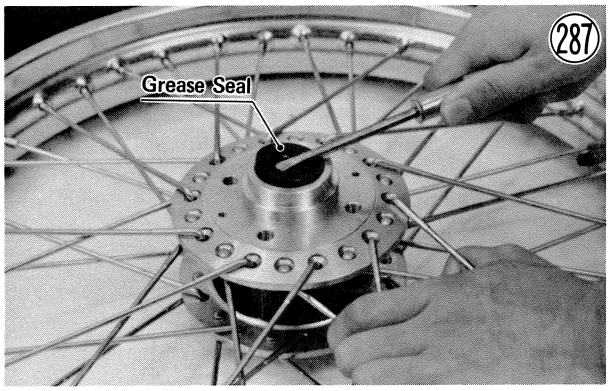

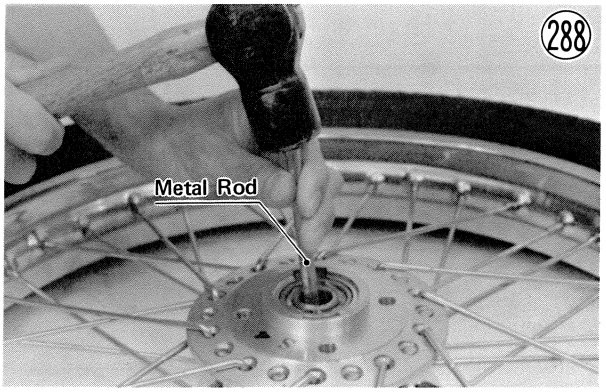

- Insert a metal rod into the hub from the speedometer gear side, and remove the bearing ⑱ on the right side by tapping evenly around the bearing inner race. The distance collar ⑯ will come out with the bearing.
- Insert the metal rod into the hub from the right side, and remove the other bearing ⑮ by tapping evenly around the bearing inner race.

Front Hub Assembly Notes:

1. Inspect the bearings and replace if necessary (Pg. 154). Install them using the wheel bearing driver and the bearing driver holder (special tools). Press the bearing until it stops at the bottom of the hole.

Front Hub

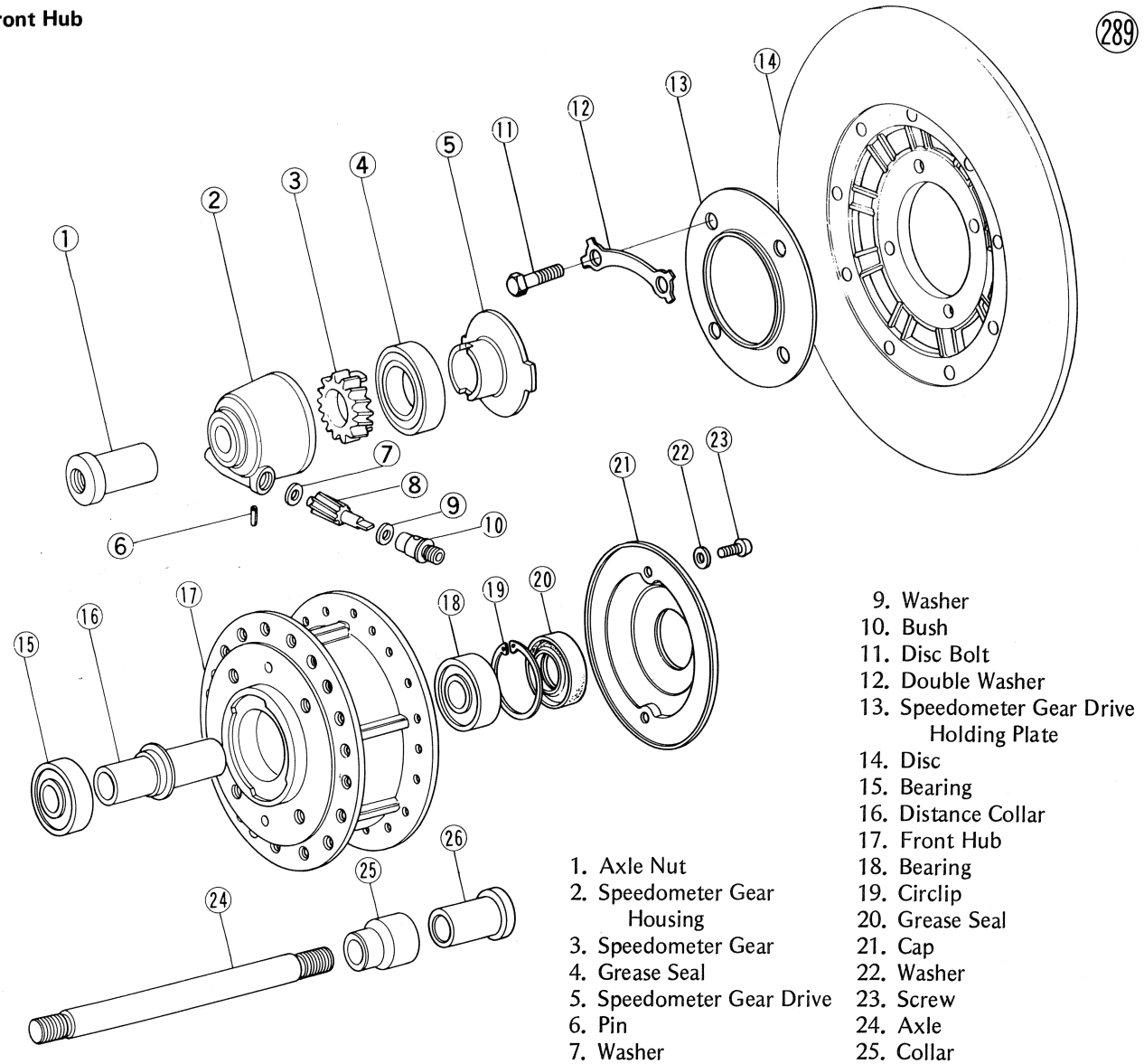

1. Axle Nut
2. Speedometer Gear Housing
3. Speedometer Gear
4. Grease Seal
5. Speedometer Gear Drive
6. Pin
7. Washer
8. Speedometer Pinion
9. Washer
10. Bush
11. Disc Bolt
12. Double Washer
13. Speedometer Gear Drive Holding Plate
14. Disc
15. Bearing
16. Distance Collar
17. Front Hub
18. Bearing
19. Circlip
20. Grease Seal
21. Cap
22. Washer
23. Screw
24. Axle
25. Collar
26. Axle Nut

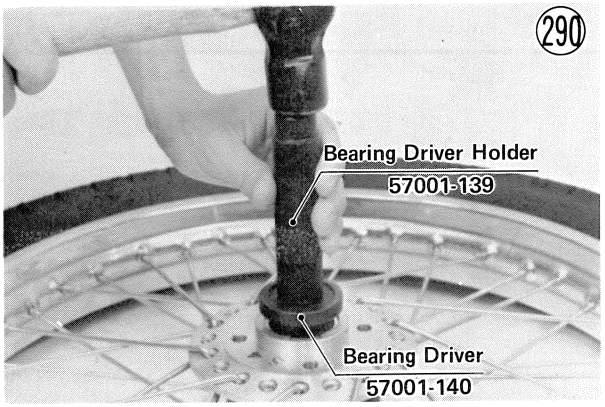

2. Replace the grease seal with a new one using a wheel bearing driver (special tool PN 57001-296). Press the seal so that the face of the seal is level with the surface of the front hub.
3. When installing the speedometer gear drive, fit it in the hub notches. The speedometer gear drive holding plate must be installed with the plain side facing in.

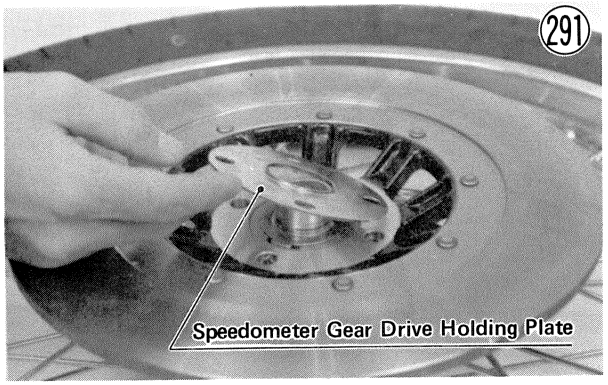

4. After tightening the disc mounting bolts (4) with 3.4 ~ 4.6 kg-m (25 ~ 33 ft-lbs) of torque, bend the washer tabs back over the bolts.
5. Install the speedometer gear housing so that it fits in the speedometer gear drive notches (Fig. 286).
6. Completely clean off any grease that has gotten on either side of the disc with a high flash-point solvent. Do not use one which will leave an oily residue.

FRONT DISC BRAKE

Removal, installation, disassembly, and assembly of the front disc brake is divided as follows:

Pad Removal
Pad Installation
Caliper Removal
Caliper Installation Notes
Caliper Disassembly
Caliper Assembly
Master Cylinder Removal
Master Cylinder Installation
Master Cylinder Disassembly
Master Cylinder Assembly Notes

NOTE: Disc removal and disc installation are covered in front hub disassembly and front hub assembly sections (Pg. 80).

WARNING **Brake linings contain asbestos fiber. Inhalation of asbestos may cause serious scarring of the lungs and may promote other internal injury and illness, including cancer. Observe the following precautions when handling brake linings:**

1. **Never blow brake lining dust with compressed air.**
2. **If any components are to be cleaned, wash with detergent, then immediately discard the cleaning solution and wash your hands.**
3. **Do not grind any brake lining material unless a ventilation hood is available and properly used.**

Before working on the disc brake, take caution of the following:

CAUTION

1. **Except for the disc pads and disc; use only disc brake fluid, isopropyl alcohol, or ethyl alcohol for cleaning brake parts. Do not use any other fluid for cleaning these parts. Gasoline, motor oil, or any other petroleum distillate will cause deterioration of the rubber parts. Oil spilled on any part will be difficult to wash off completely, and will eventually deteriorate the rubber used in the disc brake.**
2. **When handling the disc pads or disc, be careful that no disc brake fluid or any oil gets on them. Clean off any fluid or oil that inadvertently gets on the pads or disc with a high flash-point solvent. Replace the pads with new ones if they cannot be cleaned satisfactorily.**
3. **Brake fluid quickly ruins painted surfaces; any spilled fluid should be completely wiped up immediately.**
4. **If any of the brake line fittings or the bleed valve is opened at any time, AIR MUST BE BLED FROM THE BRAKE SYSTEM (Pg. 157).**
5. **When installing or assembling the disc brake, tighten the disc brake fittings to the values given in Table 6. Improper torque may cause the brake to malfunction.**

Table 6 Disc Brake Torque

Brake lever pivot bolt	0.5~0.7 kg-m	43~61 in-lbs
Brake lever adjusting bolt locknut	1.8~2.3 kg-m	13.0~16.5 ft-lbs
Master cylinder clamp	0.6~0.9 kg-m	52~78 in-lbs
Fitting (banjo) bolts	2.2~2.8 kg-m	16 ~ 20 ft-lbs
Brake pipe nipple	1.7~1.9 kg-m	12~13.5 ft-lbs
3(or 4)-way joint	0.7~0.9 kg-m	61~78 in-lbs
Front brake light switch	2.6~3.0 kg-m	19~22 ft-lbs
Caliper holder shaft nuts	2.4~2.8 kg-m	17.5~20 ft-lbs
Caliper mounting bolts	3.4~4.6 kg-m	25~33 ft-lbs
Bleed valve	0.7~1.0 kg-m	61~87 in-lbs
Disc mounting bolts	3.4~4.6 kg-m	25~33 ft-lbs

Pad Removal ('76 and '77 models):

NOTE: See Pg. 215 for 1978 and later models.

- Remove the front wheel (Pg. 79).

•Take out the mounting screw for pad B, and remove the pad. A lock washer and metal plate also come off.

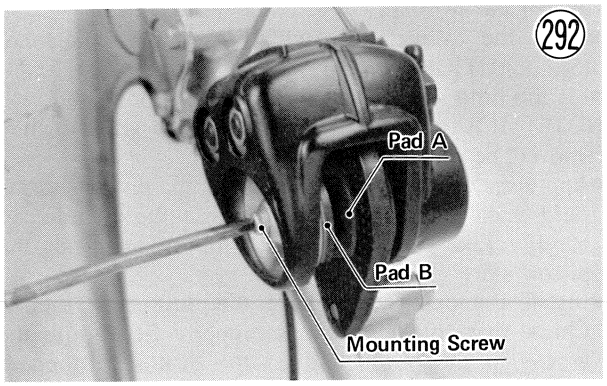

•After pad B is removed, slide the caliper body to the right side of the motorcycle and remove pad A.

NOTE: If it is difficult to take out pad A, squeeze the brake lever several times until the caliper piston pushes it out.

Pad Installation:

•Remove the bleed valve cap, open (loosen) the valve slightly, push the piston in by hand as far as it will go, and then close (tighten) the valve. Wipe up any spilled fluid, and recap the bleed valve.

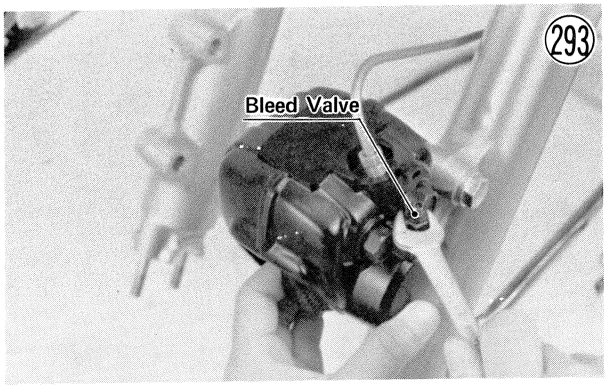

•Install pad A in the caliper holder.

NOTE: If pad A has a shim, fit pad A into the caliper holder so that the shim is toward the front of the motorcycle (Fig. 630 on Pg. 215).

•Fit pad B, aligning the tongue on the pad with the groove in the caliper. Install the metal plate, lock washer, and mounting screw, use a non-permanent locking agent on the screw.

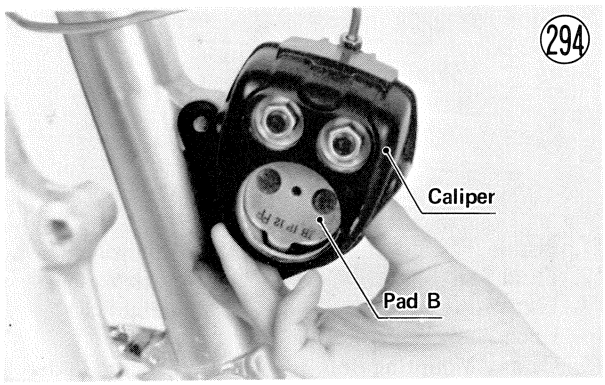

•Since brake fluid was spilled when the bleed valve was opened, check the fluid level in the master cylinder and bleed the air from the brake system (Pg. 157).

•Install the front wheel (Pg. 80).

Caliper Removal:

•If the piston or the caliper holder is to be removed, loosen the caliper holder shaft nuts (2).

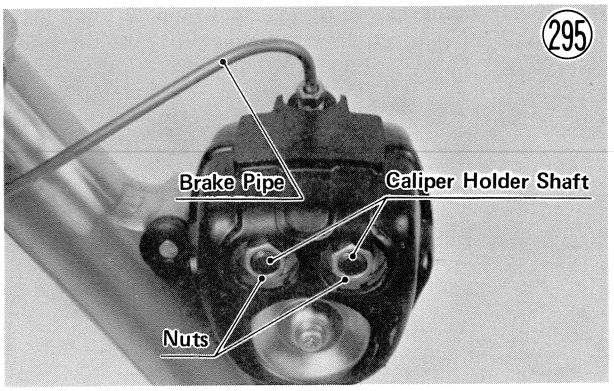

•Unscrew the brake pipe (or hose) from where it connects to the caliper. Cap the end of the pipe with the rubber bleeder valve cap to prevent fluid from flowing out.

•Remove the mounting bolts (2), each with a flat washer and lockwasher, and then take off the caliper.

Caliper Installation Notes:

1. Tighten the mounting bolts, caliper holder shaft nuts, and brake pipe nipple (or banjo bolt) to the specified torque (Table 6).
2. Check the fluid level in the master cylinder, and bleed the brake line (Pg. 161).

Caliper Disassembly:

•Take out the mounting screw ⑯ for pad B ⑲, and remove the pad. A lock washer ⑰ and metal plate ⑱ also come off.

•Remove the caliper holder shaft nuts ① (2), and pull out the caliper holder shafts ⑥ (2) and the spacers ② (2) taking care not to damage the dust covers ⑦(4). Remove the caliper holder ⑳, and push out pad A⑨.

CAUTION **To avoid damage to the dust covers and O rings, unscrew each shaft in turn a little at a time.**

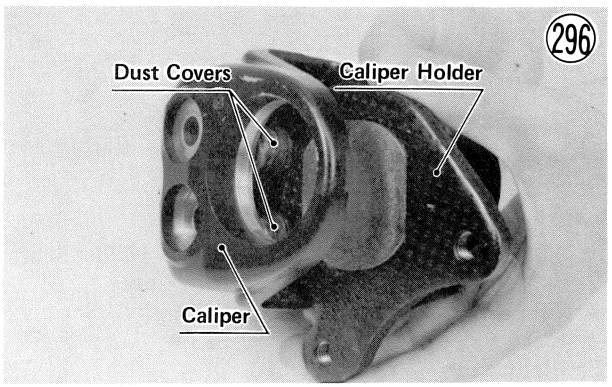

- Remove the dust seal ⑩ around the piston ⑪.
- Cover the caliper opening with a clean, heavy cloth, and remove the piston by lightly applying compressed air to where the brake line fits into the caliper.

WARNING **To avoid serious injury, never place your fingers or palm in side the caliper opening. If you apply compressed air into the caliper, the piston may crush your hand or fingers.**

NOTE: If compressed air is not available, reconnect the brake line and pump the piston out with the brake lever.

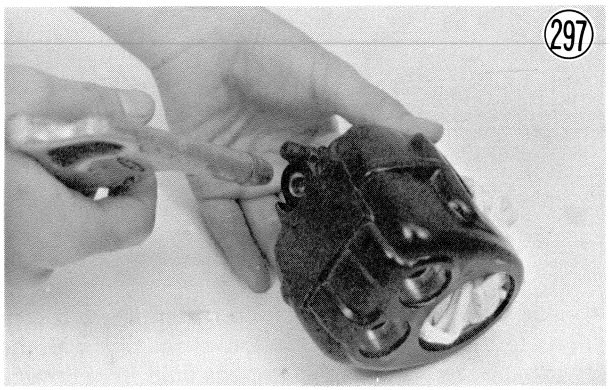

- Taking care not to damage the cylinder surface, remove the fluid seal ⑫ with a hook.

Caliper Assembly:

- Clean the caliper parts with brake fluid or alcohol (See CAUTION – Pg. 82).
- Fit the fluid seal in place inside the cylinder.

NOTE: It is recommended that the fluid seal, which is removed, be replaced with a new one.

- Apply brake fluid to the outside of the piston and the fluid seal, and push the piston into the cylinder by hand. Take care that neither the cylinder nor the piston skirt get scratched.
- Install the dust seal around the dust seal stopper. Check that the dust seal is properly fitted into the groove in the piston and on the dust seal stopper.
- Apply a thin coat of PBC (Poly Butyl Cuprysil) grease to the caliper holder shafts and the holder holes. (PBC grease is a special high-temperature, water-resistant grease.)

NOTE: Replace the dust covers and **O** rings if they were damaged.

- With the caliper holder properly positioned, insert the caliper holder shafts while carefully turning the shafts to prevent damage to the dust covers.

Front Caliper

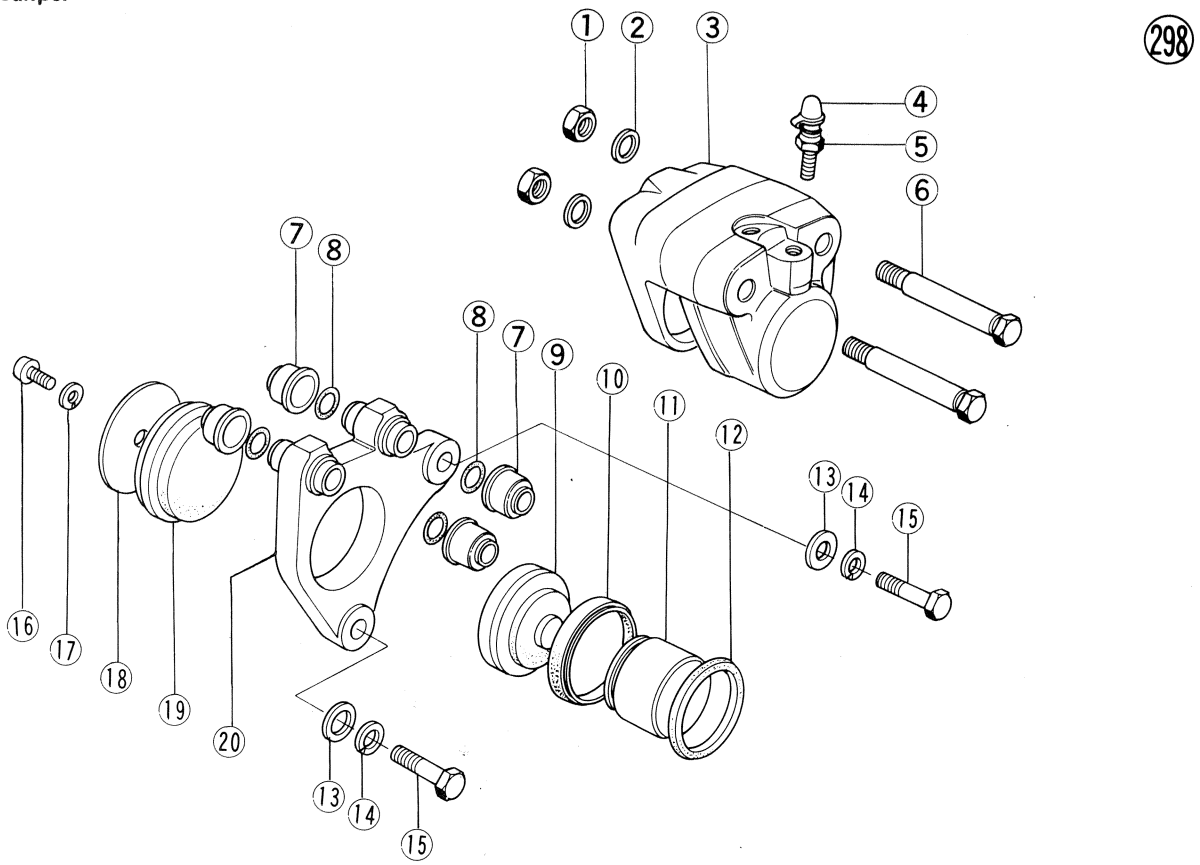

1. Nut
2. Spacer
3. Caliper
4. Bleed Valve Cap
5. Bleed Valve
6. Caliper Holder Shaft
7. Dust Cover
8. O Ring
9. Pad A
10. Dust Seal
11. Piston
12. Fluid Seal
13. Flat Washer
14. Lock Washer
15. Caliper Mounting Bolt
16. Mounting Screw
17. Lock Washer
18. Metal Plate
19. Pad B
20. Caliper Holder

Caliper Dust Seal

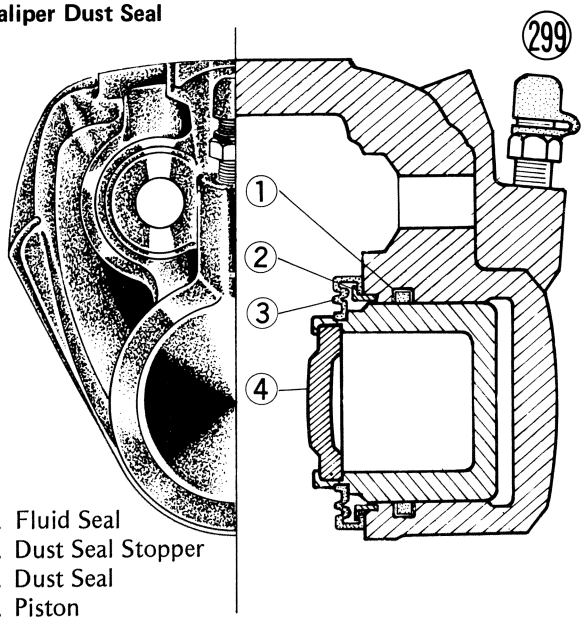

1. Fluid Seal
2. Dust Seal Stopper
3. Dust Seal
4. Piston

- Install the spacers and nuts, and tighten the nuts loosely.

NOTE: Do not forget to tighten the nuts after installing the caliper on the motorcycle (Pg. 83).

- Install pad A in the caliper holder.
- Fit pad B, aligning the tongue on the pad with the groove in the caliper. Install the metal plate, lock washer, and mounting screw using a non-permanent locking agent on the screw (Fig. 294).

Master Cylinder Removal:

- Take off the right rear view mirror.
- Pull back the dust cover, and remove the banjo bolt to disconnect the upper brake hose from the master cylinder. There is a flat washer on each side of the hose fitting.

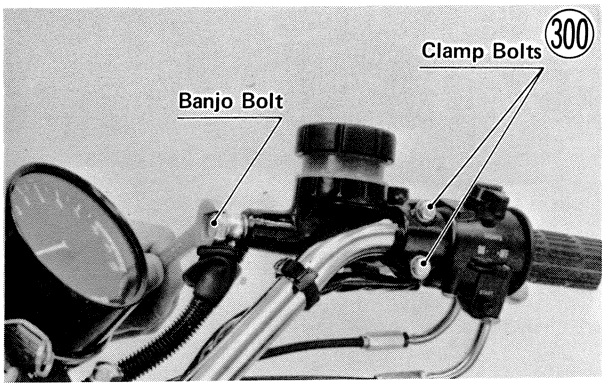

- Remove the clamp bolts (2), and take off the master cylinder. There is a flat washer for each master cylinder clamp bolt. Immediately wipe up any brake fluid that spills.

Master Cylinder Installation Notes:

1. The master cylinder clamp is installed with the small projection towards the throttle grip. Tighten the upper clamp bolt first, and then the lower clamp bolt, both with 0.6 ~ 0.9 kg-m (52 ~ 78 in-lbs) of torque.

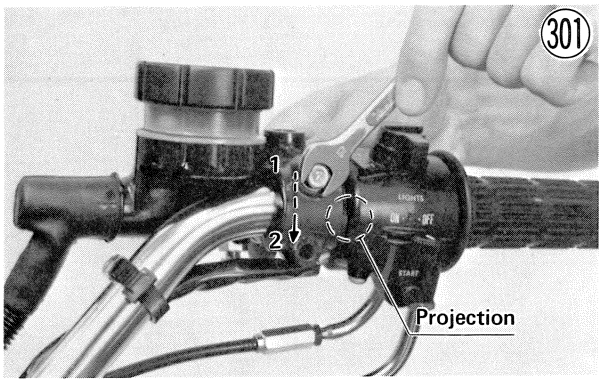

2. Bleed the brake line after master cylinder installation (Pg. 161).

Master Cylinder Disassembly ('76 and '77 model):

NOTE: See Pg. 216 for 1978 and later models.

- Take off the master cylinder cap ① and diaphragm ③, and empty out the brake fluid.
- Take off the brake lever ⑩. Use the master cylinder stopper remover (special tool) to remove the dust seal stopper ㉖, and then remove the dust seal ㉕.

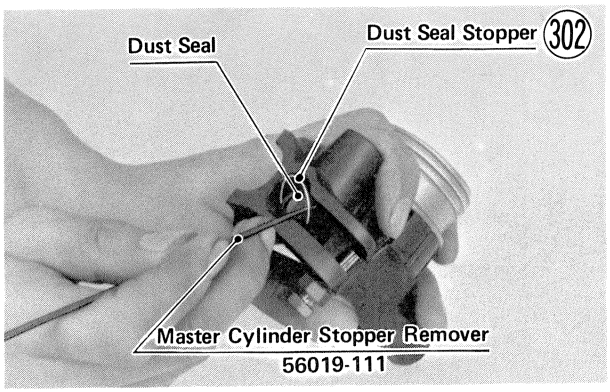

- Remove the retaining ring ㉔ with retaining ring pliers (special tool), and take the stopper ㉓, piston ㉑, primary cup ⑳, spring ⑲, and check valve ⑱ out of the master cylinder body. Do not remove the secondary cup ㉒ from the piston since removal will damage the cup.

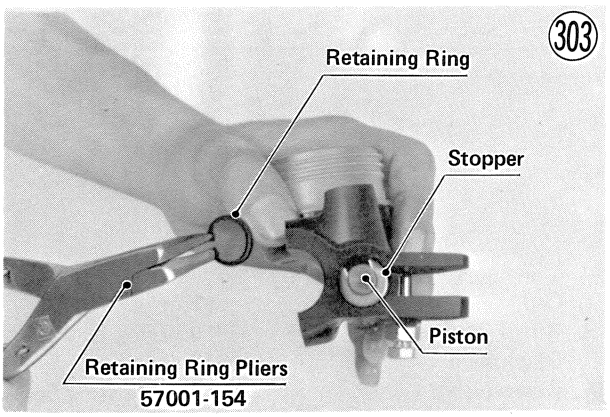

Master Cylinder Assembly Notes:

1. Before assembly, clean all parts including the master cylinder with brake fluid or alcohol (See CAUTION – Pg. 82). Apply brake fluid to the removed parts and to the inner wall of the cylinder.

Front Master Cylinder

304

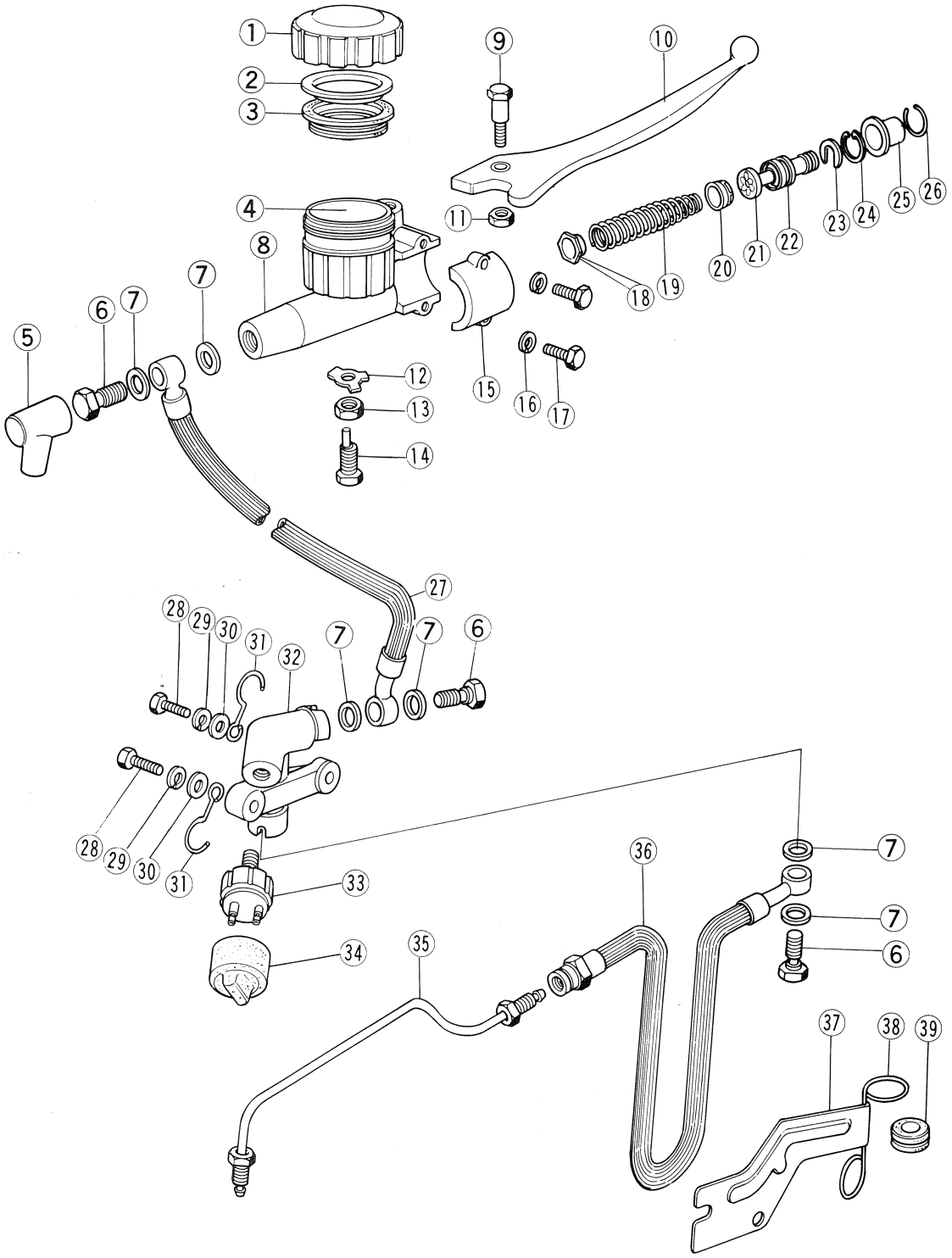

1. Cap
2. Ring Plate
3. Diaphragm
4. Reservoir
5. Dust Cover
6. Banjo Bolt
7. Flat Washer
8. Master Cylinder Body
9. Bolt
10. Brake Lever
11. Nut
12. Lock Washer
13. Nut
14. Adjusting Bolt
15. Clamp
16. Flat Washer
17. Bolt
18. Check Valve
19. Spring
20. Primary Cup
21. Piston
22. Secondary Cup
23. Stopper
24. Retaining Ring
25. Dust Seal
26. Dust Seal Stopper
27. Upper Brake Hose
28. Bolt
29. Lock Washer
30. Flat Washer
31. Cable Guide
32. 3-way Joint
33. Brake Light Switch
34. Dust Cover
35. Brake Pipe
36. Lower Brake Hose
37. Guide Holder Plate
38. Cable Guide
39. Grommet

2. Be sure that the primary cup and check valve are not installed backwards and that neither is turned sideways after insertion.

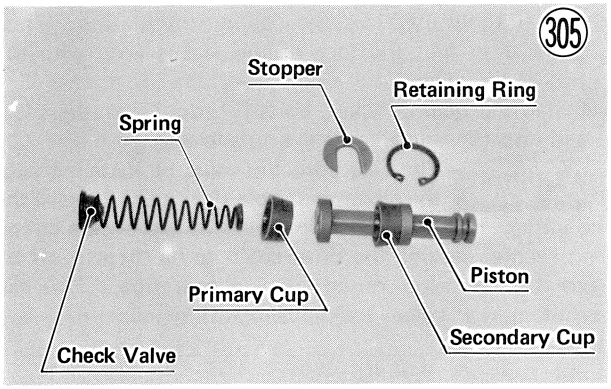

3. Use a new retaining ring for assembly, pushing it into place in the cylinder wall groove with the master cylinder ring driver (special tool). Use the same tool for installing the dust seal and dust seal stopper.

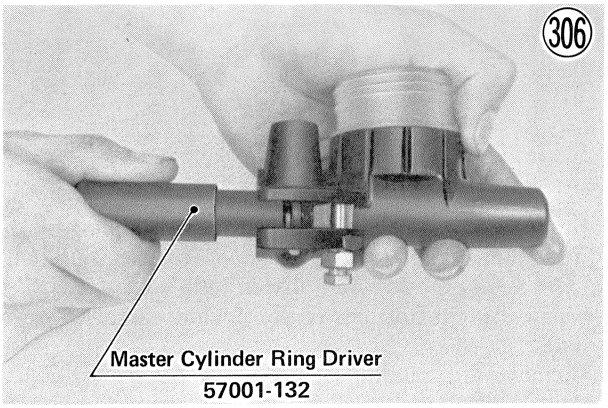

REAR WHEEL

Removal:

- Put the motorcycle up on its center stand.
- Remove the chain guard bolts (2) and washers (2), and take off the chain guard.

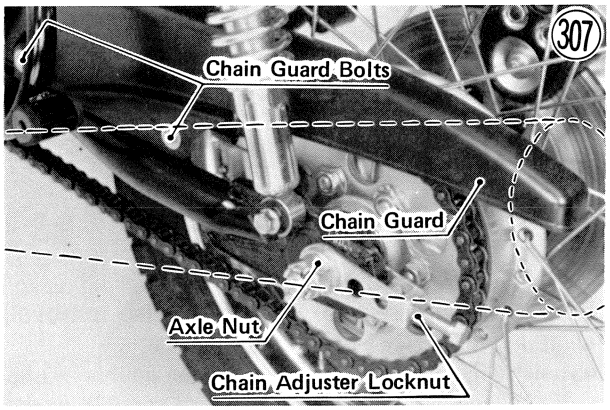

- Remove the axle cotter pin, and take out the axle nut and washer.
- Remove the cotter pin, and loosen the nut at the rear end of the torque link.
- Loosen the 36 mm caliper holder sleeve nut.

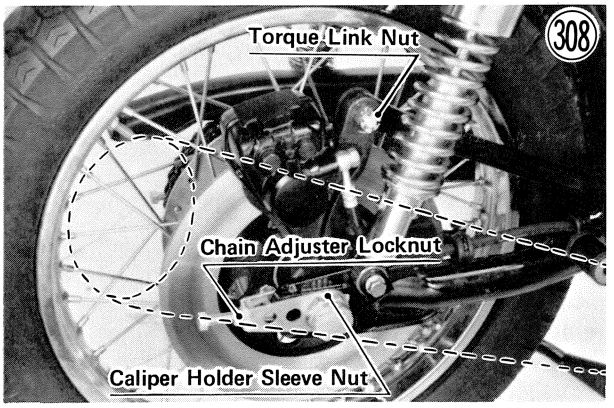

- Loosen the left and right chain adjuster locknuts, fully loosen both chain adjusters, and kick the wheel forward so that the chain can be easily removed from the rear sprocket.
- Remove the drive chain from the rear sprocket, and hang it to the left side of the swing arm.
- While holding the rear wheel so that the grease seal in the right side of the rear hub does not get damaged, pull out the axle. The left chain adjuster comes off with the rear wheel.
- Pull the rear wheel toward the rear until it is stopped by the rear fender, and remove the coupling assembly and rubber dampers (6) from the left side of the rear hub.

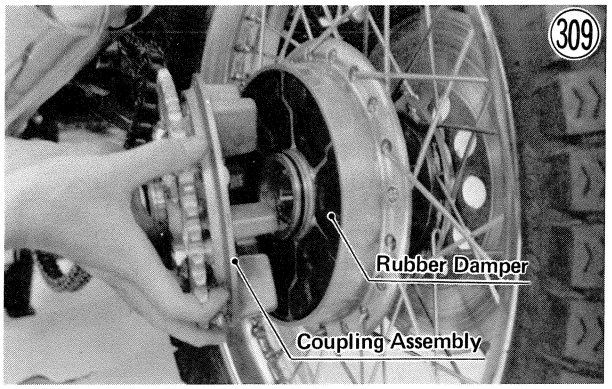

- Clear the disc from the caliper, lean the wheel to the left, and pull it out under the left side of the rear fender.
- Insert a wood wedge (7 ~ 8 mm thick) between the disc brake pads. This prevents them from being moved out of their proper position, should the brake pedal be pushed down accidentally.

Installation:

- Remove the wedge spacer from between the disc brake pads.
- Slip the rear wheel back from the left rear and install the rubber dampers (6) and the coupling assembly in the rear hub. Be sure the disc side collar and coupling collar are in place.

- Slip the disc into the caliper.
- Fit the drive chain onto the rear sprocket.
- Install the left chain adjuster, and insert the axle through the hub from the right to left, while holding the rear wheel in place.
- Install the axle washer and nut, and tighten the axle and caliper holder nuts loosely.
- Install the chain guard.
- Adjust the drive chain (Pg. 17).

Wheel Coupling Disassembly:

- Pull out the coupling collar ⑩ from the left, and the coupling sleeve ⑥ from the right.
- Install the rubber dampers ⑬ (6) and wheel coupling assembly temporarily to aid in rear sprocket ⑪ removal.
- Straighten the bent portions of the double washers ⑰ (3).
- Remove the rear sprocket nuts ⑯ (6), the double washers, and the sprocket bolts ⑱ (6) to separate the rear sprocket ⑪ and wheel coupling ⑤.
- Remove the coupling from the rear wheel.
- Using a hook, pull out the grease seal ② and remove the circlip ③.

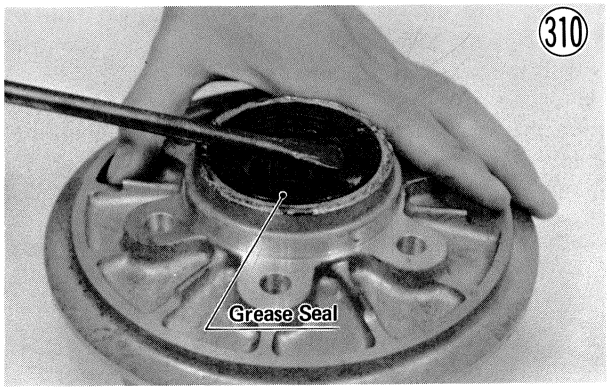

- Remove the bearing ④ by tapping from the wheel side evenly around the bearing inner race.

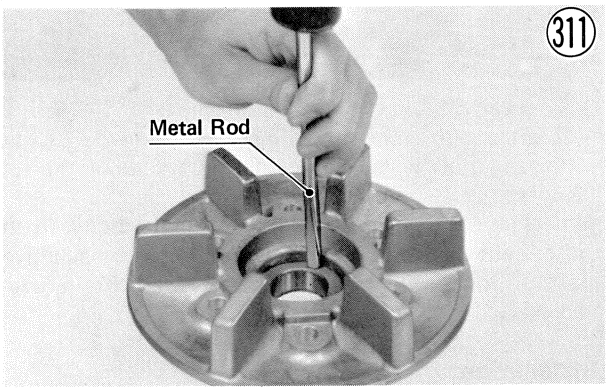

Wheel Coupling Assembly:

- Inspect the bearing, and replace if necessary (Pg. 154). Lubricate it (Pg. 155), and install it using the wheel bearing driver and the bearing driver holder (special tools PN 57001-139 and 57001-296). Press the bearing until it stops at the bottom of the hole.
- Install the circlip.
- Replace the grease seal with a new one using the same special tools used for the bearing installation. Press the seal so that the face of the seal is level with the end of the grease seal hole.
- Install the rear sprocket, bolts (6), double washers (3), and nuts (6), and tighten the nuts loosely.

WARNING **The rear sprocket must be installed with the chamfered hole side facing toward the coupling. If not, the sprocket will not seat on the coupling evenly, causing the drive chain to be thrown off by excessive sprocket runout during operation. This can result in rear wheel lockup and loss of control.**

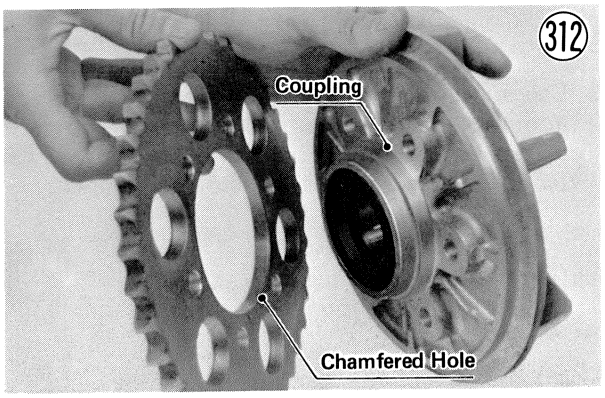

- Install the rubber dampers and wheel coupling on the rear hub, and then tighten the sprocket nuts with 3.6~4.4 kg-m (26~32 ft-lbs) of torque.
- Bend the tab portions of the double washers over the nuts.
- Remove the coupling from the rear hub.
- Install the coupling sleeve on the right side and the coupling collar on the left side of the coupling.

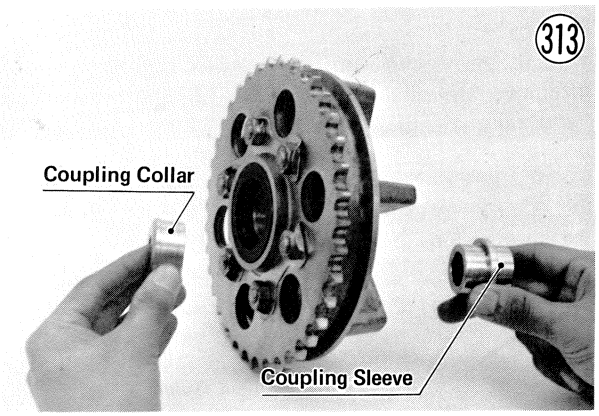

Rear Hub Disassembly (including disc removal):

- Pull out the collar ㉖ from the disc side.
- Straighten the bent portions of the double washers ㉔ (2), and remove the bolts ㉕ (4), double washers (2), and rear disc ㉓.
- Remove the grease seal ㉒ using a hook, and remove the circlip ㉑.

Rear Hub

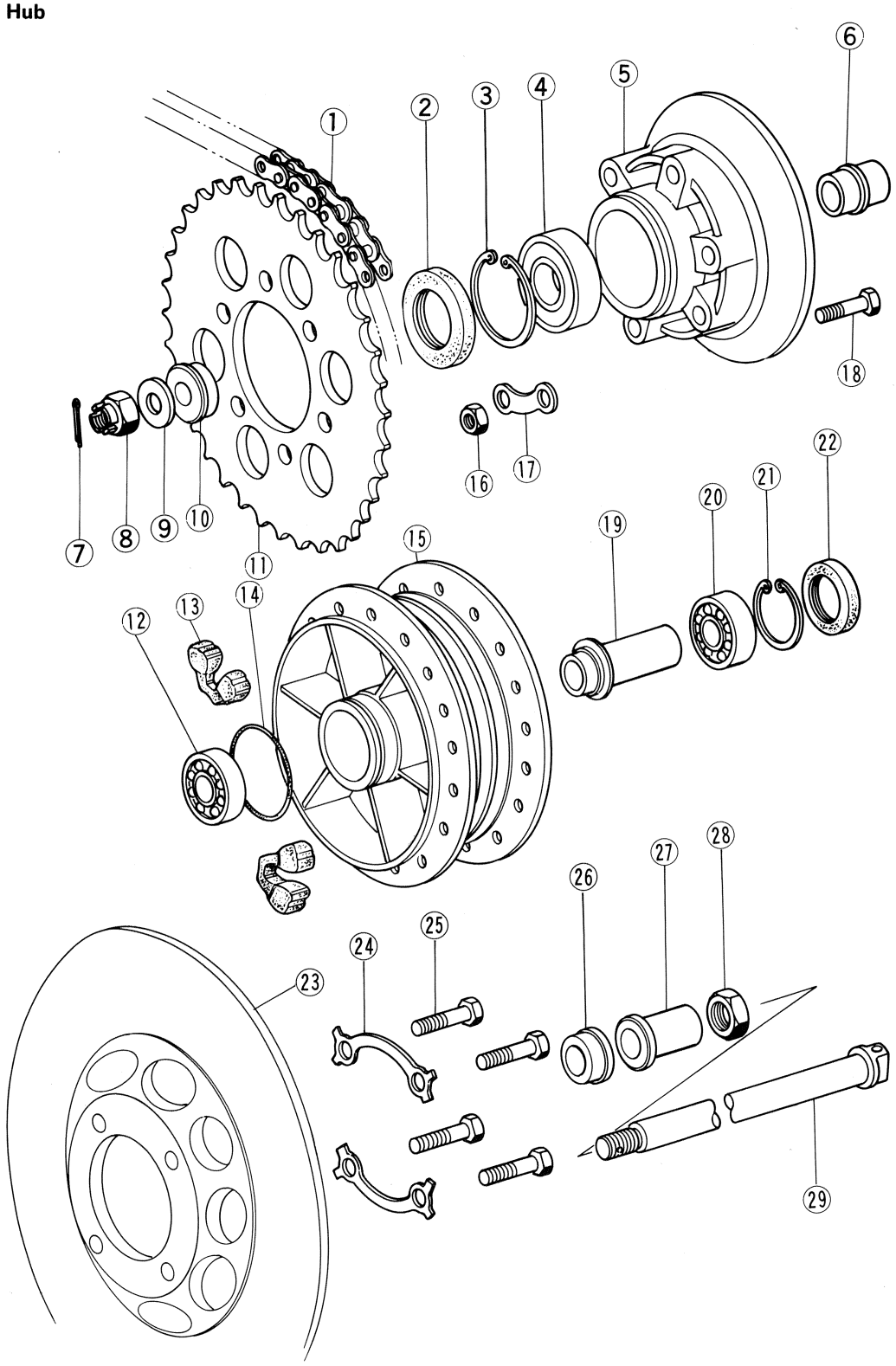

1. Drive Chain
2. Grease Seal
3. Circlip
4. Ball Bearing
5. Wheel Coupling
6. Coupling Sleeve
7. Cotter Pin
8. Axle Nut
9. Washer
10. Coupling Collar
11. Rear Sprocket
12. Ball Bearing
13. Rubber Damper
14. O Ring
15. Rear Hub
16. Sprocket Nut
17. Double Washer
18. Bolt
19. Distance Collar
20. Ball Bearing
21. Circlip
22. Grease Seal
23. Disc
24. Double Washer
25. Bolt
26. Collar
27. Caliper Holder Sleeve
28. Sleeve Nut
29. Axle

- Insert a metal rod into the hub from the disc side, and remove the left side bearing ⑫ by tapping evenly around the bearing inner race. The distance collar ⑲ will come out with the bearing.
- Insert the metal rod into the hub from the other side, and tap out the remaining bearing ⑳.

Rear Hub Assembly Notes:

1. Inspect the bearings and replace if necessary (Pg. 154). Install them using the wheel bearing driver and the bearing driver holder (special tools).

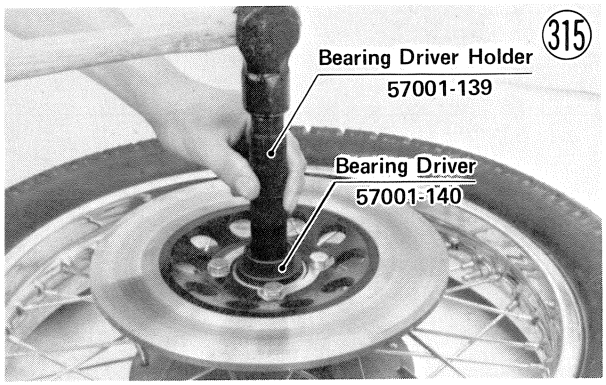

2. Inspect the grease seal and replace if necessary (Pg. 154). Press it in until it stops at the bottom of the hole using the wheel bearing driver and the bearing driver holder (special tools PN 57001-139 and 57001-140).
3. Inspect the **O** ring and replace if necessary.

REAR DISC BRAKE

Removal, installation, disassembly, and assembly of the rear disc brake is divided as follows:

Pad Removal
Pad Installation
Caliper Removal
Caliper Installation
Caliper Disassembly and Assembly
Master Cylinder Removal
Master Cylinder Installation Notes
Master Cylinder Disassembly
Master Cylinder Assembly

NOTES:

1. Disc removal and disc installation are covered in rear hub disassembly and rear hub assembly sections (Pg. 88).
2. Refer to CAUTION and WARNING (Pg. 82) for general disc brake information.

Pad Removal:

- Remove the rear wheel (Pg. 87).
- Remove pads A and B using the same method covered in front disc brake pads removal (Pg. 82).

Pad Installation:

- Remove the bleed valve cap, open (loosen) the valve slightly, push the piston in by hand as far as it will go, and then close (tighten) the valve. Wipe up any spilled fluid, and recap the bleed valve.

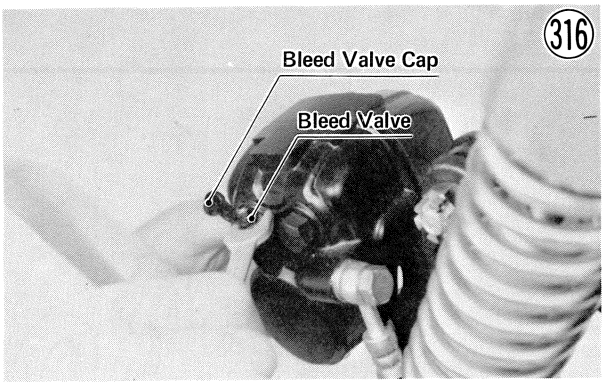

- Install pad A in the caliper holder, aligning the groove of pad A with the ridge in the caliper holder.

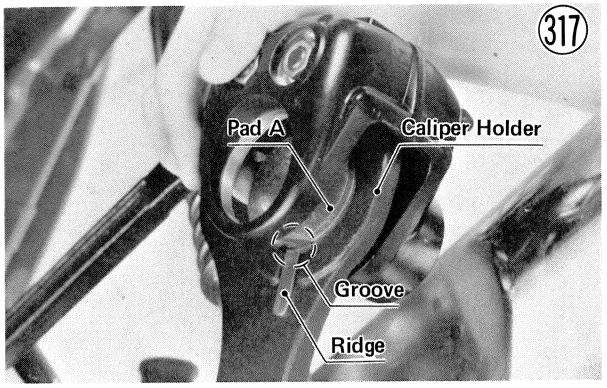

- Fit pad B, aligning the tongue on the pad with the groove in the caliper, and install the metal plate, lock washer, and mounting screw using a non-permanent locking agent on the screw.

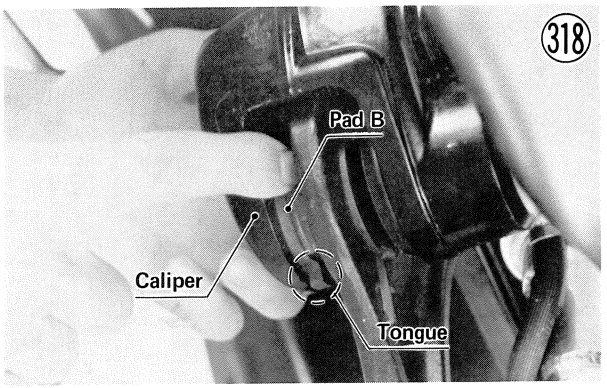

- Since brake fluid was spilled when the bleed valve was opened, check the fluid level in the master cylinder and bleed the air from the brake system (Pg. 157).
- Install the rear wheel (Pg. 87).
- Adjust the drive chain (Pg. 17).

Rear Caliper Removal:

- Remove the rear wheel (Pg. 87).
- Remove the banjo bolt at the caliper, and temporarily secure the end of the brake hose to some place higher than the rear brake reservoir to prevent fluid from flowing out. There is a flat washer on each side of the hose fitting.

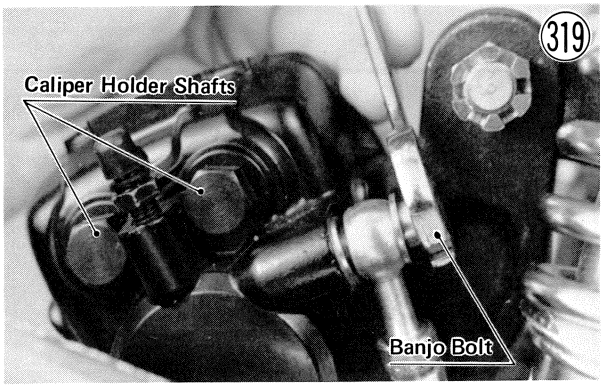

- Immediately wipe up any brake fluid that spills.
- If the piston or the caliper holder is to be removed, loosen the caliper holder shaft nuts (2).
- Remove the caliper holder sleeve nut, the sleeve, and the right chain adjuster.

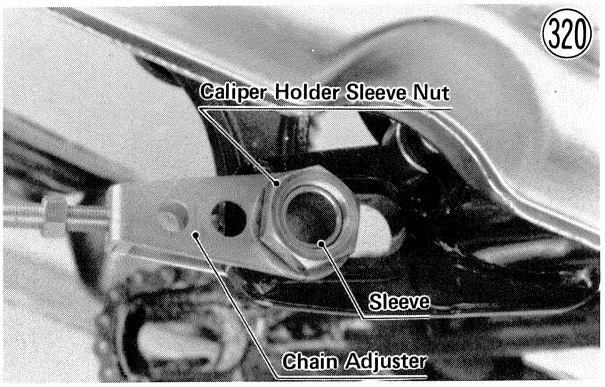

- Remove the torque link nut and bolt from the rear end of the torque link. Free the caliper from the motorcycle.

Rear Caliper Installation:

- Install the sleeve, sleeve nut, right chain adjuster, and caliper, and tighten the sleeve nut loosely. It will be tightened securely after adjusting the drive chain.

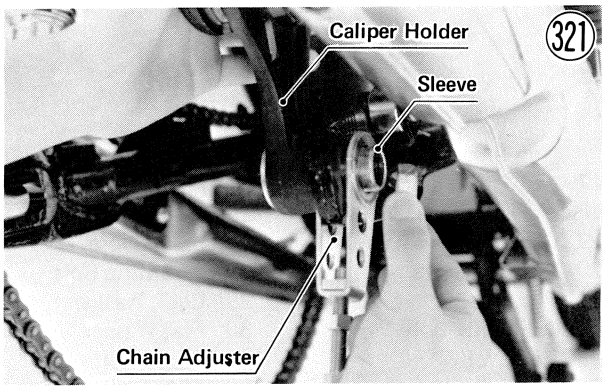

- Fit the torque link bolt through the torque link and the caliper from the left side and tighten the nut loosly.
- Install the rear wheel (Pg. 87).
- Tighten the caliper holder shaft nuts with 2.4 ~ 2.8 kg-m (17.5~20 ft-lbs) of torque.
- Connect the brake hose to the caliper, tightening its banjo bolt with 2.2 ~ 2.8 kg-m (16 ~ 20 ft-lbs) of torque. There is a flat washer for each side of the brake hose fitting.
- Adjust the drive chain (Pg. 17).
- Check the fluid level in the master cylinder, and bleed the brake line (Pg. 157).

Rear Caliper Disassembly and Assembly:

Rear caliper disassembly and assembly instructions are the same as those for the front caliper. See Pg. 83.

Rear Master Cylinder Removal:

- Pull off the right side cover.
- Slide down the push rod dust cover.

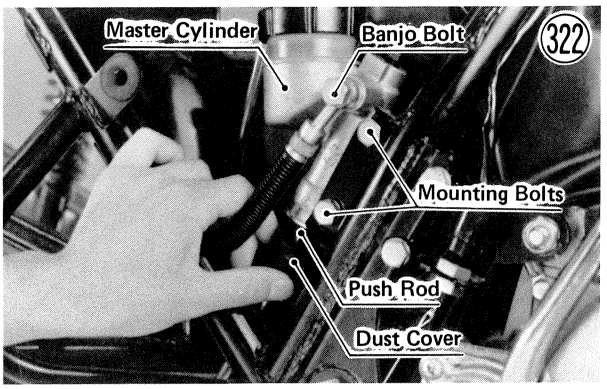

- Remove the banjo bolt to disconnect the brake hose from the master cylinder. There is a flat washer on each side of the hose fitting. Immediately wipe up any brake fluid that spills.
- Remove the master cylinder mounting bolts (2), lock washers (2), and flat washers (2), and free the rear master cylinder from the motorcycle.

Rear Master Cylinder Installation Notes:

1. Tighten the master cylinder mounting bolts securely.
2. Bleed the brake line after master cylinder installation (Pg. 157).
3. Adjust the rear brake (Pg. 18).

Rear Master Cylinder Disassembly:

- Take off the master cylinder cap ① and diaphragm ③, and empty the brake fluid into a suitable container.
- Remove the circlip ⑪ with circlip pliers, and pull out the piston ⑨ and secondary cup ⑩. Do not remove the secondary cup from the piston since removal will damage the cup.
- Remove the bleed valve ⑤, and remove the return spring ⑦ and primary cup ⑧ by lightly applying compressed air into the bleed valve hole.

Rear Master Cylinder

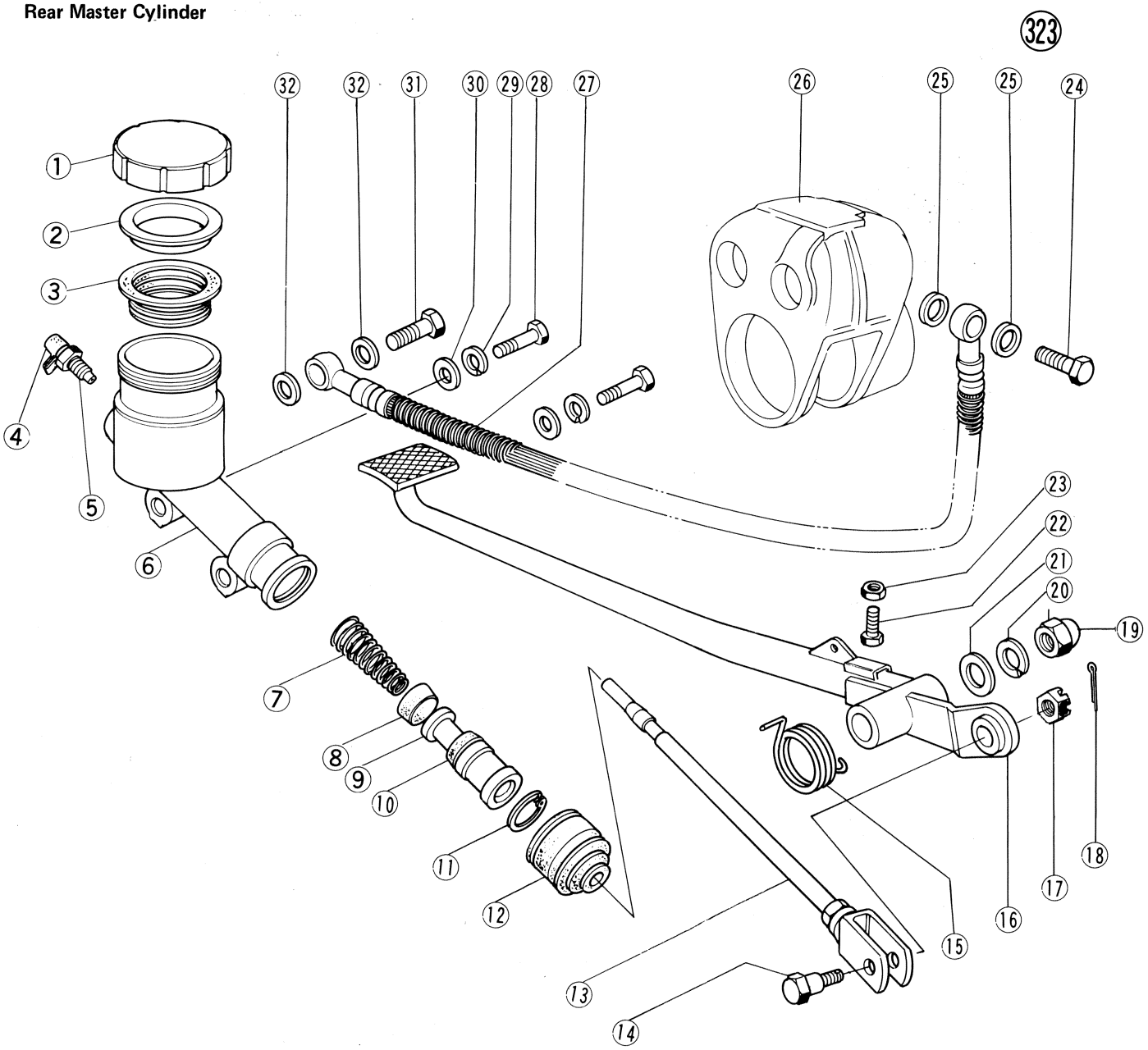

1. Cap
2. Ring Plate
3. Diaphragm
4. Bleed Valve Cap
5. Bleed Valve
6. Master Cylinder Body
7. Return Spring
8. Primary Cup
9. Piston
10. Secondary Cup
11. Circlip
12. Dust Cover
13. Push Rod
14. Pivot Bolt
15. Return Spring
16. Brake Pedal
17. Nut
18. Cotter Pin
19. Cap Nut
20. Lock Washer
21. Flat Washer
22. Adjusting Bolt
23. Locknut
24. Banjo Bolt
25. Flat Washer
26. Caliper Body
27. Brake Hose
28. Mounting Bolt
29. Lock Washer
30. Flat Washer
31. Banjo Bolt
32. Flat Washer

Rear Master Cylinder Assembly:

- Before assembly, clean all parts including the master cylinder with brake fluid or alcohol (See CAUTION – Pg. 82), and apply brake fluid to the removed parts and the inner wall of the cylinder. Take care not to scratch the piston the inner wall of the cylinder.
- Install the bleed valve.
- Put the return spring into the cylinder. The spring seat side must face out.
- Install the primary cup. Be sure that the primary cup is not installed backward or turned sideways after insertion.

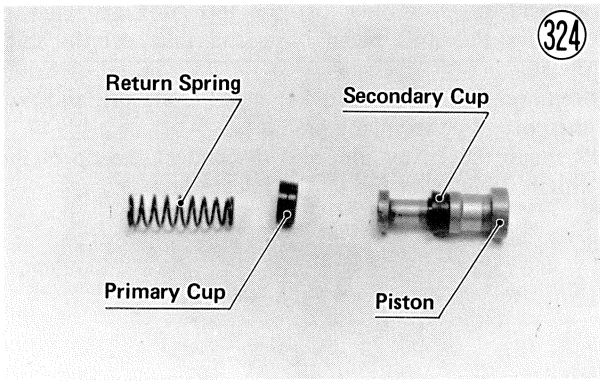

- Install the piston, and with a suitable rod, install the circlip to hold the piston in as far as it will go.
- Fit the diaphragm and the master cylinder cap.

TIRE AND TUBE

Removal:

- Remove the wheel from the motorcycle (Pg. 79 or 87).

CAUTION **Do not lay the wheel on the ground with the disc facing down. This can damage or warp the disc.**

- Mark the valve stem position on the tire with chalk so that the tire will be reinstalled in the same position to maintain wheel balance.
- Take out the valve core to let out the air.

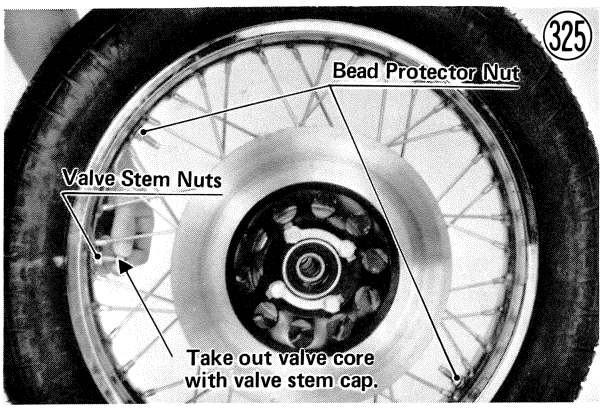

- Remove the valve stem nut, and fully loosen the two bead protector nuts.
- Use a rubber mallet to break the tire beads away from both sides of the rim.

NOTE: Front tire has no tire bead protectors.

- Step on the side of the tire opposite the valve stem, and start prying the tire off the rim near the valve stem with tire irons. Take care not to insert the tire irons so deeply that the tube gets damaged.

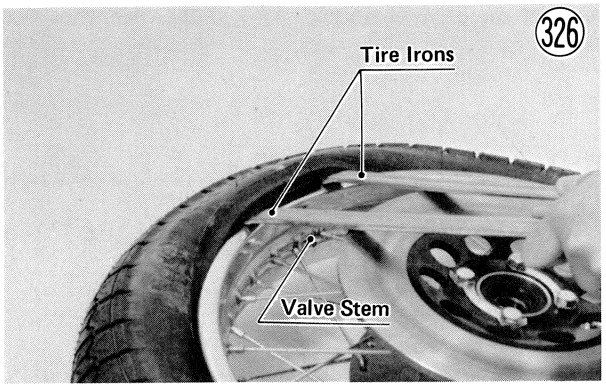

- Remove the tube when one side of the tire is pried off.
- Pry the tire off one of the bead protectors and then pry the other side of the tire off the rim.

Installation:

- Put just enough air in the tube to keep it from getting caught between the tire and rim. Too much air makes fitting difficult, and too little will make the tube more liable to be pinched by the irons. Dust the tube and inside the tire with talcum powder, and insert the tube into the tire now, even if the tire was completely removed from the rim. Insert the valve stem into the rim, and screw the nut on loosely.
- Lubricate the tire beads and rim flanges with a soap and water solution or liquid soap to help seat the tire beads in the rim while inflating the tire.
- If the tire was completely removed, pry one side back onto the rim and fit the bead protectors into the tire. Be sure that the tire does not go on backwards; the rear tire has an arrow molded into the sidewall to show the direction of tire rotation. Align the chalk mark on the tire with the valve stem.

NOTE: If a new tire is installed, the yellow paint mark on the tire should be aligned with the valve stem for best balancing results.

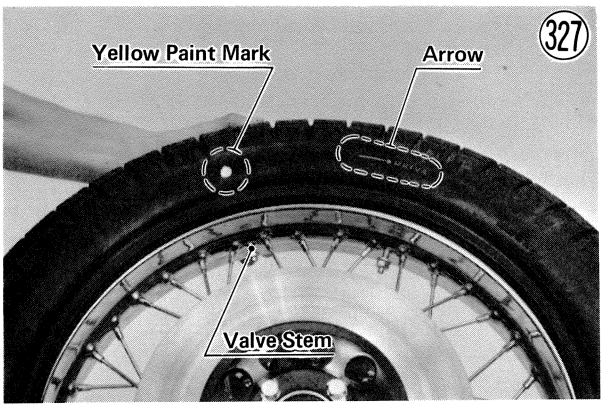

- Pry the other side of the tire onto the rim, starting at the side opposite the valve. Take care not to insert the tire irons so deeply that the tube gets damaged.
- Check that the tube is not pinched between the tire and rim, and then inflate to the specified pressure (Pg. 153).
- Tighten the bead protector and valve stem nuts, and put on the valve cap.
- Balance the wheel (Pg. 20).
- Mount the wheel on the motorcycle (Pg. 80 or 87).
- Adjust the drive chain (Pg. 17), if the rear wheel was removed.

RIM

Removal:

- Remove the wheel from the motorcycle (Pg. 79 or 87).
- Take the tire and tube off the rim (Pg. 93).
- Remove the bead protectors (only on the rear wheel) and the rubber band.
- Tape or wire all the spoke intersections so that the spokes don't get mixed up, and unscrew the nipples from all the spokes with a screwdriver.

Installation:

NOTE: When assembling the front wheel, check that an arrow is on the inner circumference of the rim. If it is, be sure to assemble the rim and hub so that the arrow coincide with the direction of wheel rotation.

- Fit all the spokes through the holes, and screw all the nipples onto the spokes tightening them partially.
- Suspend the wheel by the axle, and set up a dial gauge to measure rim runout. Fix the axle in place if necessary to prevent horizontal movement.

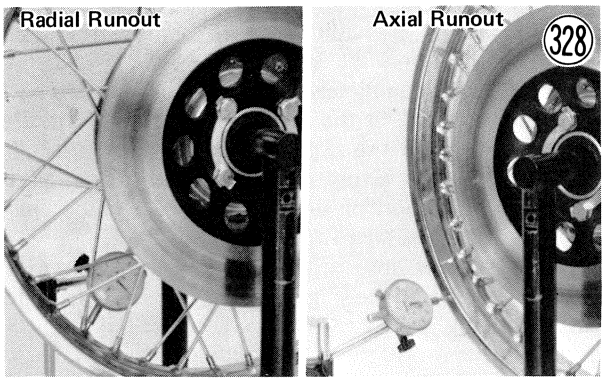

- Tighten the spokes evenly so that the radial (out from the axle) runout is less than 0.8 mm and the axial (side to side) runout is less than 0.5 mm.
- Make sure that the spokes are tightened evenly. Standard torque is 0.20 ~ 0.40 kg-m (17 ~ 35 in-lbs).
- Mount the tube and tire (Pg. 93).
- Balance the wheel (Pg. 20).
- Mount the wheel on the motorcycle (Pg. 80 or 87).
- Adjust the drive chain (Pg. 17), if the rear wheel was removed.

SPOKE (breakage replacement)

- Reduce the tire air pressure by a small amount.
- Insert the new spoke through the hub, and bend it to meet the nipple.
- Tighten with a spoke wrench. Standard torque is 0.20 ~ 0.40 kg-m (17 ~ 35 in-lbs).
- Inflate the tire to standard pressure (Pg. 153).

CLUTCH CABLE

Removal:

- Remove the left foot peg mounting nuts (2) and washers (2), and take off the left foot peg.
- Remove the shift pedal bolt, and take off the shift pedal.
- Remove the engine sprocket cover bolts (4), and pull the cover free from the crankcase.
- Remove the cotter pin, and disconnect the tip of the clutch cable from the clutch release lever.

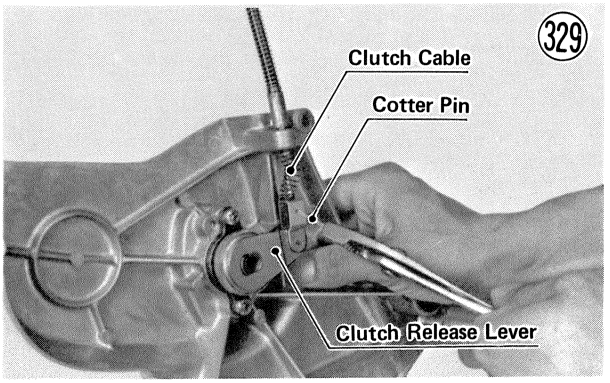

- Loosen the lock nut on the clutch lever, and screw in the adjuster.
- Line up the slots in the clutch lever, locknut, and adjuster and free the cable from the lever.
- Pull the cable free from the motorcycle.

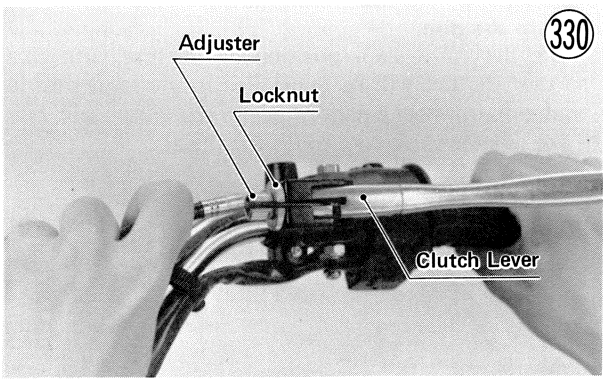

Installation:

NOTE: Before installing the clutch cable, lubricate it.

- Run the upper end of the cable behind the head pipe gusset, through the guide at the left of the stem head, and to the clutch lever.

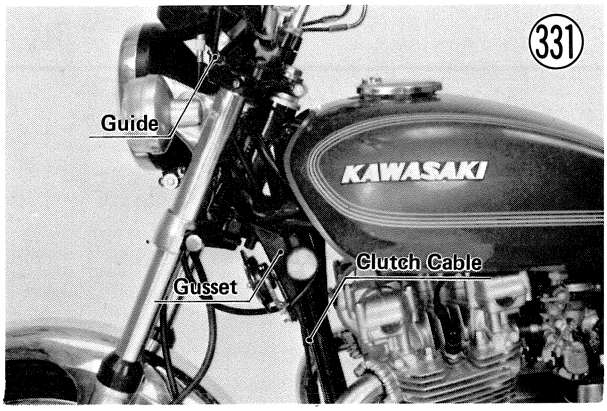

- Fit the tip of the cable back into the clutch lever.
- Run the lever end of the clutch cable through the cable guide, between the left down tube and the lower part of the engine, and into the engine sprocket cover and spring. Fit the tip of the inner cable into the clutch release lever.
- Using a new cotter pin, secure the cable tip to the release lever.
- Install the engine sprocket cover using the shift shaft oil seal guide (special tool) to protect the oil seal in the cover (Fig. 196), and tighten its screws.
- Fasten the clutch cable to the frame down tube with the clamp.
- Install the shift pedal so that its end matches the level of the engine sprocket cover lower left bolt, and tighten its bolt (Fig, 149).
- Mount the left foot peg with its nuts and washers.
- Adjust the clutch (Pg. 16).

THROTTLE CABLES

Removal:

- Remove the carburetors (Pg. 33).
- Loosen both cable guide nuts, and pull out the cables through the right cable guide on the stem head.

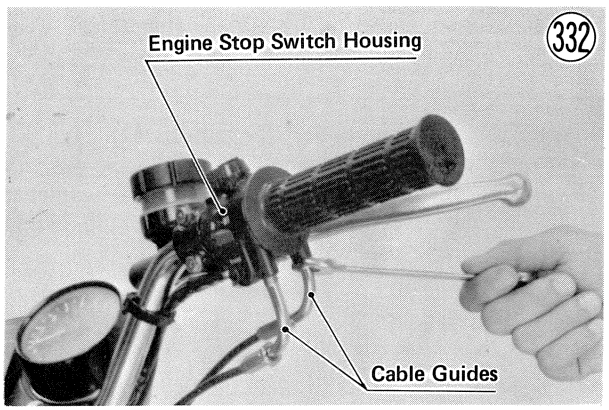

- Remove the engine stop switch housing screws (2), and open the housing.
- Slip both throttle cable tips from their catches in the throttle grip.
- Unscrew the decelerator throttle cable guide (the cable guide next to the starter button), and pull the cable out of the engine stop switch housing. Then do the same with the accelerator throttle cable guide to free the throttle cables from the motorcycle.

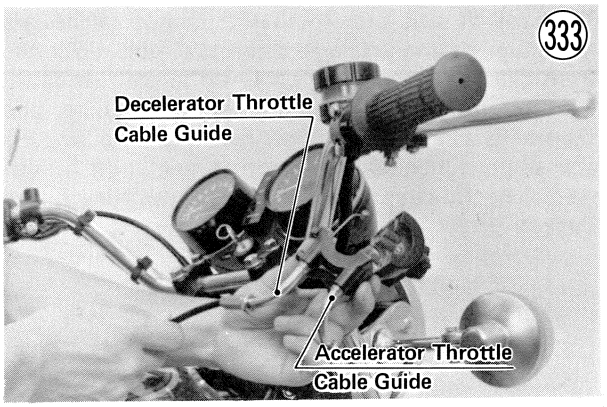

Installation:

NOTE: Before installing the throttle cables, lubricate them.

- Screw the accelerator throttle cable guide (shorter than the decelerator throttle cable guide) into the side of the engine stop switch opposite the starter button. Screw it in almost all the way, and then lightly tighten the guide nut.

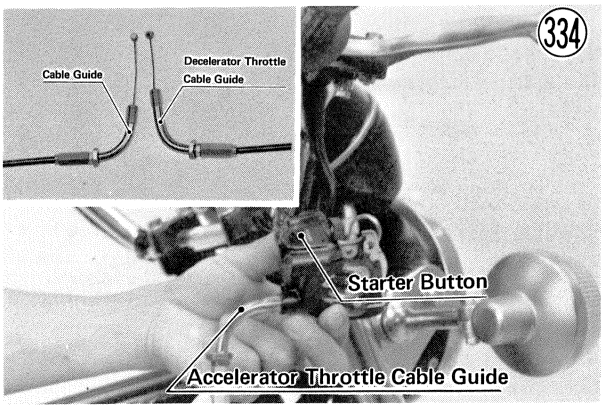

- Screw in the decelerator cable guide almost all the way, and then lightly tighten the guide nut.
- Run both cables through the right cable guide on the stem head, between the right front shock absorber and the head pipe, and between the right top tube and upper tube to the carburetors. The cables should be natually routed, neither one twisted about the other.

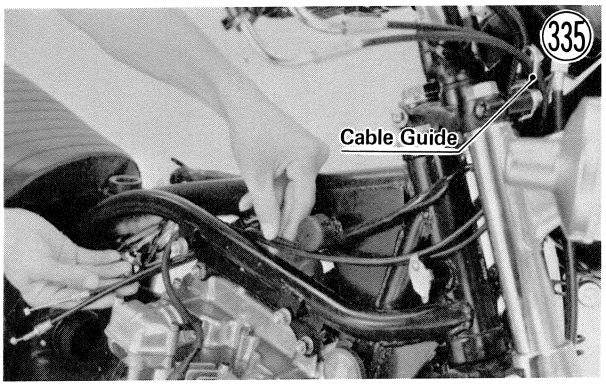

- Turn the throttle grip so that the cable catches are facing up, fit the accelerator throttle cable tip in the front catch and the other cable tip in the rear catch.
- Put together the engine stop switch housing, and tighten its screws. The upper half of the housing has a small projection which fits into a hole in the handlebar. The front switch housing screw is longer than the rear screw.

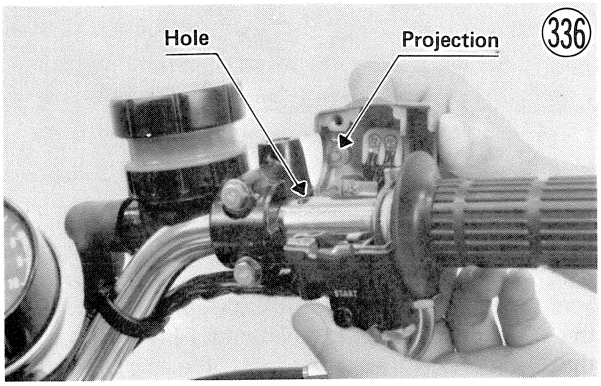

- Turn each guide in the direction of its cable, and tighten its guide nut to secure the guide in the proper position.
- Install the carburetors (Pg. 33).
- Adjust the throttle cables (Pg. 13).

HANDLEBAR

Removal:

- Remove the fuel tank (Pg. 32) or cover the tank with thick cloth to avoid damaging the painted surface.
- Remove the clutch adjusting cover.
- Loosen the locknut, and back out the clutch adjusting screw a couple of turns to give the clutch cable plenty of play.

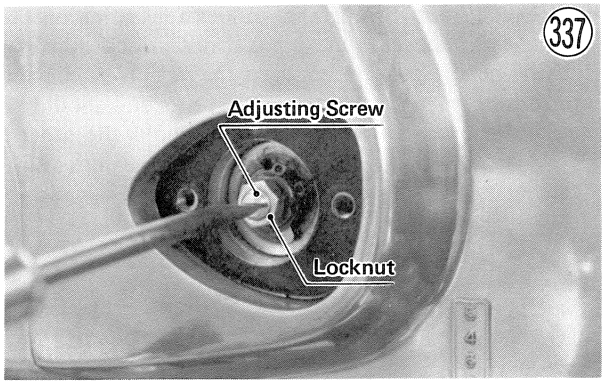

- Loosen the locknut on the clutch lever, and screw in the adjuster and line up the slots in the clutch lever, locknut, and adjuster. Free the inner cable from the lever.

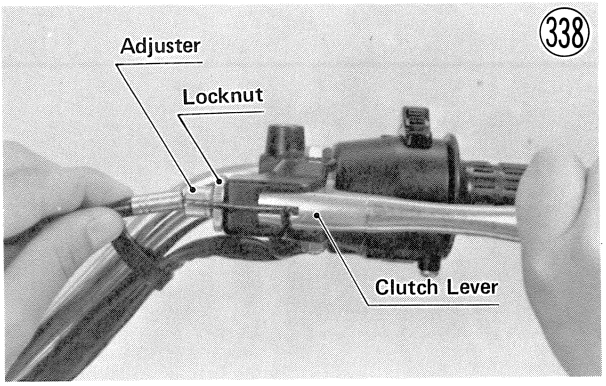

- Take off the rear view mirrors.
- Remove the straps which hold the light switch wiring harness and engine stop switch wiring harness to the handlebar.
- Take out the light switch screws (2), and remove the light switch from the handlebar. If necessary, loosen the clutch lever bolt, and slide the clutch lever to the right.
- Remove the engine stop switch housing screws (2), and open the housing. If the screw driver can not seat properly on the screw head, loosen the cable guide nut and turn the guide.

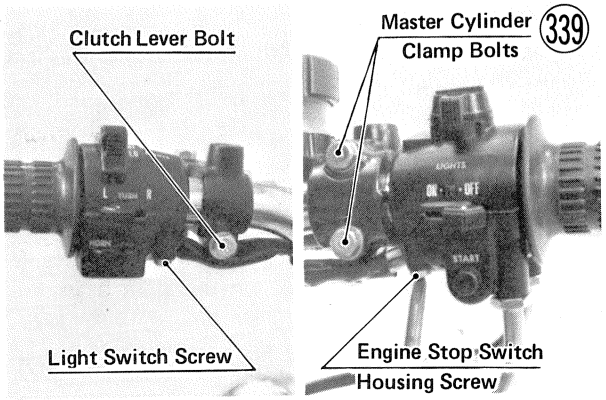

- Loosen the master cylinder clamp bolts (2).
- Remove the handlebar clamp bolts and lock washers (4 ea), remove the clamps (2), and slide the handlebar from the master cylinder and the engine stop switch and throttle grip assembly.

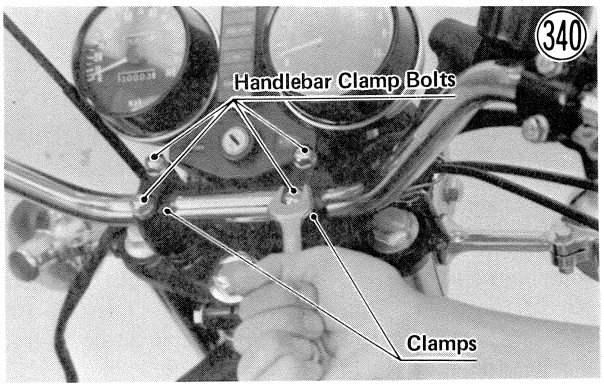

- To remove the clutch lever, loosen the clutch lever bolt, cut off the left handlegrip, which is bonded to the handlebar, and slide off the clutch lever.
- Remove the clip, nut, lock washer, and flat washer from each handlebar holder stem, and remove the handlebar holder and rubber dampers (2) from each side of the stem head.

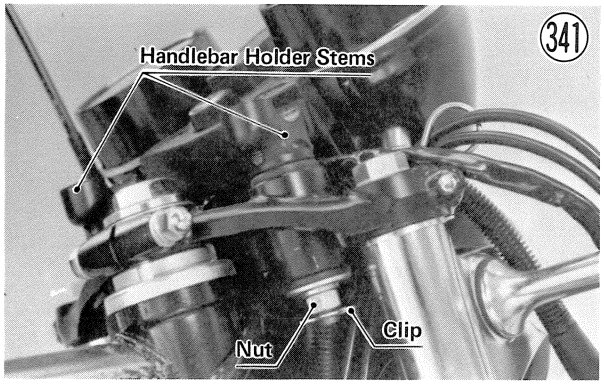

Installation:

- For each handlebar holder, install the rubber dampers (2) and insert the holder. Install the flat washer, lock washer, and nut in this order; and hand-tighten the nut.
- Be sure to install the black/yellow lead terminal between the flat washer and lock washer.
- If the clutch lever and left handlegrip were removed; slide the clutch lever back on, tighten its bolt loosely, and bond a new left handlegrip onto the handlebar.
- Slide the right side of the handlebar through the master cylinder holder into the engine stop switch housing and throttle grip assembly. Mount it in its clamps so that the angle of the handlebar matches the angle of the front fork as shown. Torque for the handlebar clamp bolts is 1.6 ~ 2.2 kg-m (11.5 ~ 16.0 ft-lbs). Each bolt has a lock washer.

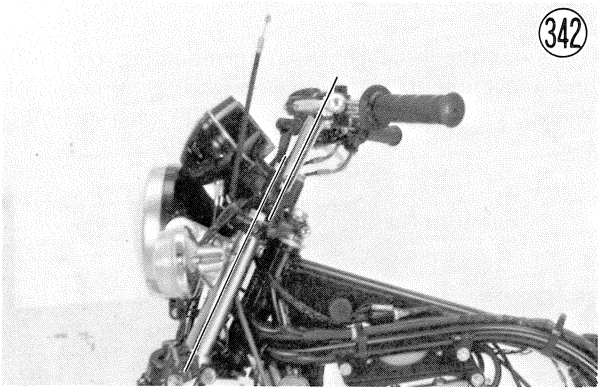

- Tighten both handlebar holder nuts securely, and insert the clips through the holder stems.
- Position the engine stop switch housing in place with its projection in the hole in the handlebar (Fig. 336), and tighten its screws. The front screw is longer than the rear screw.
- With the brake lever mounted at the proper angle, tighten first the upper and then the lower master cylinder clamp bolt to 0.5 ~ 0.7 kg-m (43 ~ 61 in-lbs) of torque.
- Install the light switch.
- Strap both the light switch wiring harness and the engine stop switch wiring harness back onto the handlebar.
- Fit the tip of the clutch cable back into the clutch lever.
- Adjust the clutch (Pg. 16).
- Install the rear view mirrors.
- Adjust the rear view mirrors.

SPEEDOMETER CABLE

Removal:

- Disconnect the upper and lower ends of the speedometer cable with pliers.

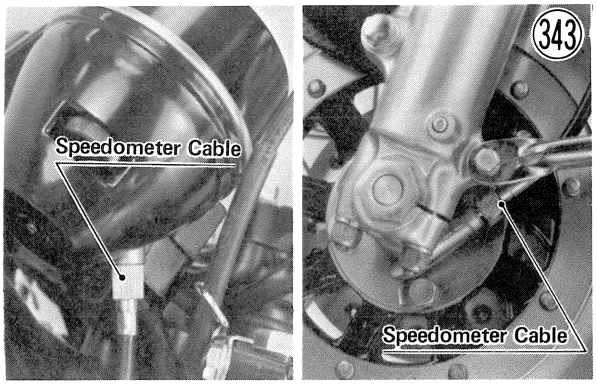

- Pull the cable free.

Installation:

- Run the speedometer cable through its guides at the 3-way joint and the front fender left side, and secure the upper end of the cable to the speedometer with pliers.
- Insert the speedometer inner cable into the speedometer gear housing while turning the wheel so that the slot in the end of the cable will seat in the tongue of the speedometer pinion. Tighten the cable nut with pliers.

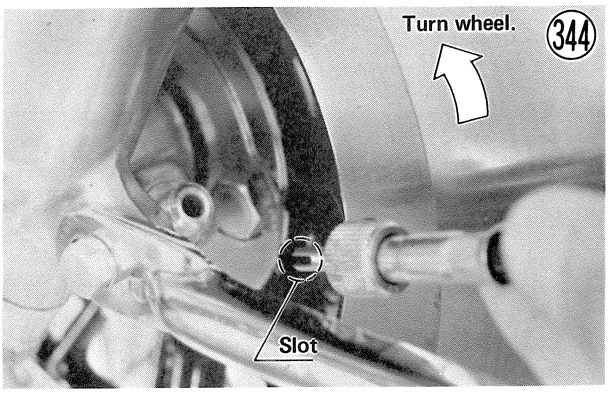

TACHOMETER CABLE

Removal:

- Disconnect the upper end of the tachometer cable with pliers and the lower end of the cable with a wrench.

•Free the cable from the motorcycle.

Installation:

•Run the tachometer cable through its guide at the 3-way joint, fit the inner cable into the tachometer, and tighten the cable nut with pliers.
•Check to see that there is a gasket between the outer cable and the cylinder head.
•Fit the bottom end of the cable into its place in the cylinder head. Turn it if necessary so that it fits all the way into place, and tighten its nut with a wrench.

HEADLIGHT UNIT

Removal:

•Take out the retaining screws ⑧ (2), and swing the unit ⑦ from the housing ⑳.
•Disconnect the headlight socket ⑥ from the rear of the unit. For semi-sealed beam units, the bulb can now be removed.
•Remove the pivot screws ②, nuts ⑨, and rubber dampers ⑩ (2 ea), and the beam horizontal adjusting screw ①. A nut ⑭, spring ⑬, and spring ⑫ come off with the adjusting screw.
•Separate the outer rim ③ from the inner rim ④.
•Remove the screws ⑪ (2), and separate the sealed beam unit from the inner rim and mounting rim ⑮.

Headlight Unit

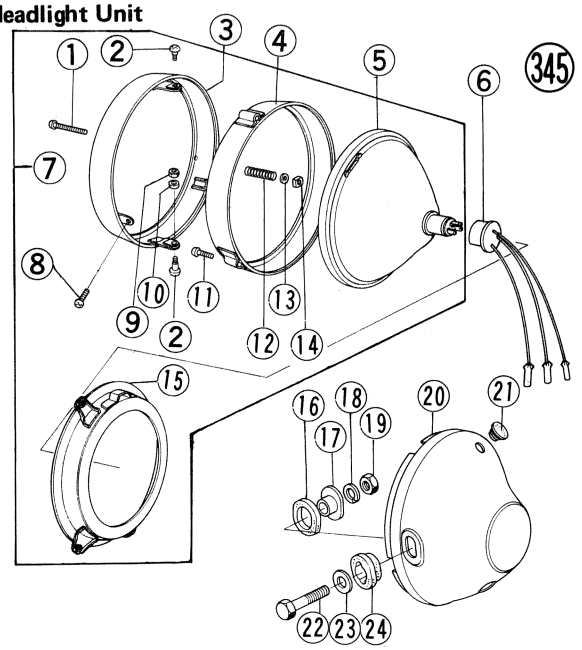

1. Adjusting Screw
2. Pivot Screw
3. Outer Rim
4. Inner Rim
5. Sealed Beam Unit
6. Socket
7. Headlight Unit
8. Retaining Screw
9. Nut
10. Rubber Damper
11. Screw
12. Spring
13. Spring Seat
14. Nut
15. Mounting Rim
16. Damper
17. Collar
18. Lock Washer
19. Nut
20. Housing
21. Plug
22. Mounting Bolt
23. Flat Washer
24. Damper

Installation Notes:

1. Place the sealed beam unit into the mounting rim, fitting the raised portion into its holders on the mounting rim. This ensures that the part of the sealed beam unit marked "TOP" will be to the top after the headlight unit is mounted back into the headlight housing.

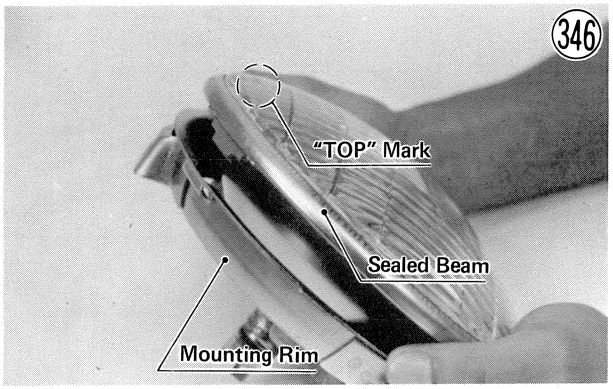

2. The spring seat on the adjusting screw goes between the spring and the bracket.
3. Carry out the horizontal beam adjustment after installation (Pg. 21).

SPEEDOMETER, TACHOMETER, AND ILLUMINATOR LIGHTS

Removal:

•Take out the retaining screws (2), pull the bottom of the headlight unit out of its housing, and swing the unit out from the housing.
•Disconnect the headlight socket from the rear of the unit.
•Loosen the mounting bolts underneath the headlight housing.
•Take out the headlight housing mounting bolts (2), and move the housing down slightly. A nut, lock washer, and flat washer come off with each mounting bolt.

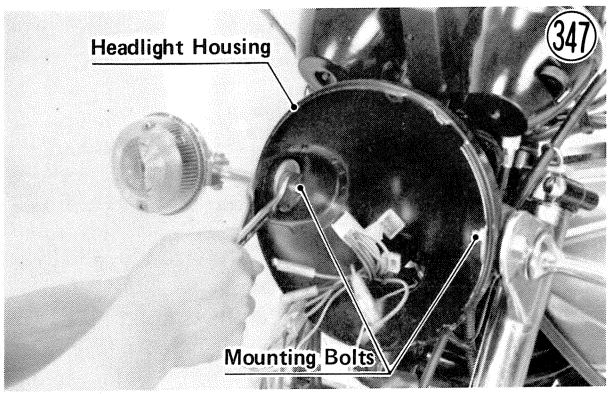

•Disconnect the upper end of the speedometer cable and tachometer cable with pliers.
•Remove the screw and lock washer, and wiring grommet from the meter cover, and pull off the cover.

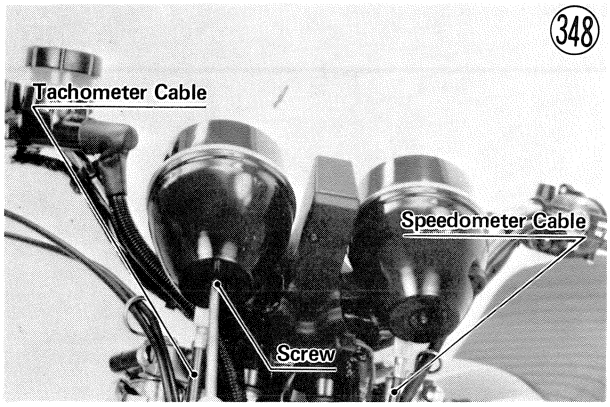

●Remove the nuts, lock washers, flat washers, dampers, and collars (2 ea) from the bottom of the meter holder.

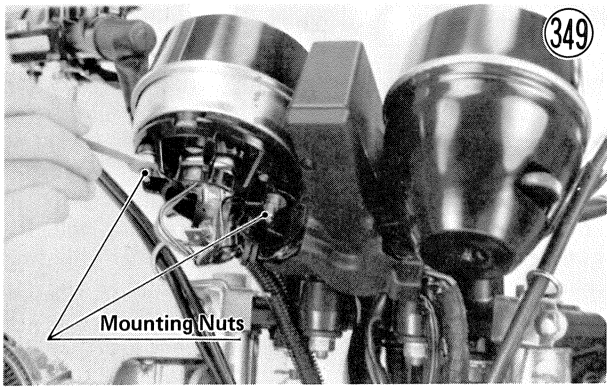

●Pull up on the front of the meter, and pull out the illuminator lights (2) from their base to complete meter removal.

●To remove the illuminator bulb, first press the bulb inwards, then holding the bulb in this position, twist it to the left and pull it out.

CAUTION **Place the meter so that the correct side of the meter is up. If a meter is left upside down or sideways for any length of time it will malfunction.**

Headlight Housing Installation

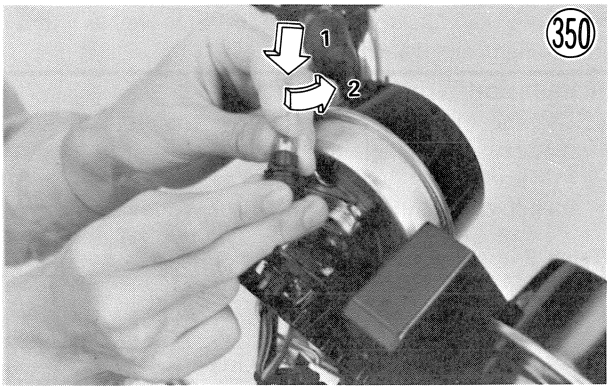

Installation Notes:

1. Use 12V 3.4W bulbs for illuminator light replacement.
2. If the headlight housing dampers have been removed, install the dampers as illustrated in Fig. 352.
3. Carry out the vertical headlight adjustment after installation (Pg. 21).

INDICATOR LIGHTS (Neutral, High Beam, Oil, Stop Lamp, Left and Right Turn)

Removal:

●Remove the ignition switch mounting nut and take off the upper switch cover.

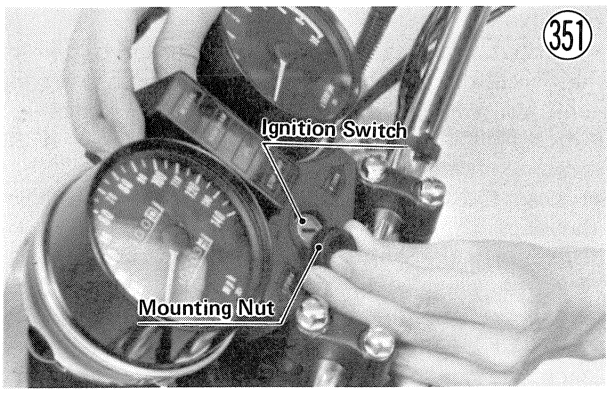

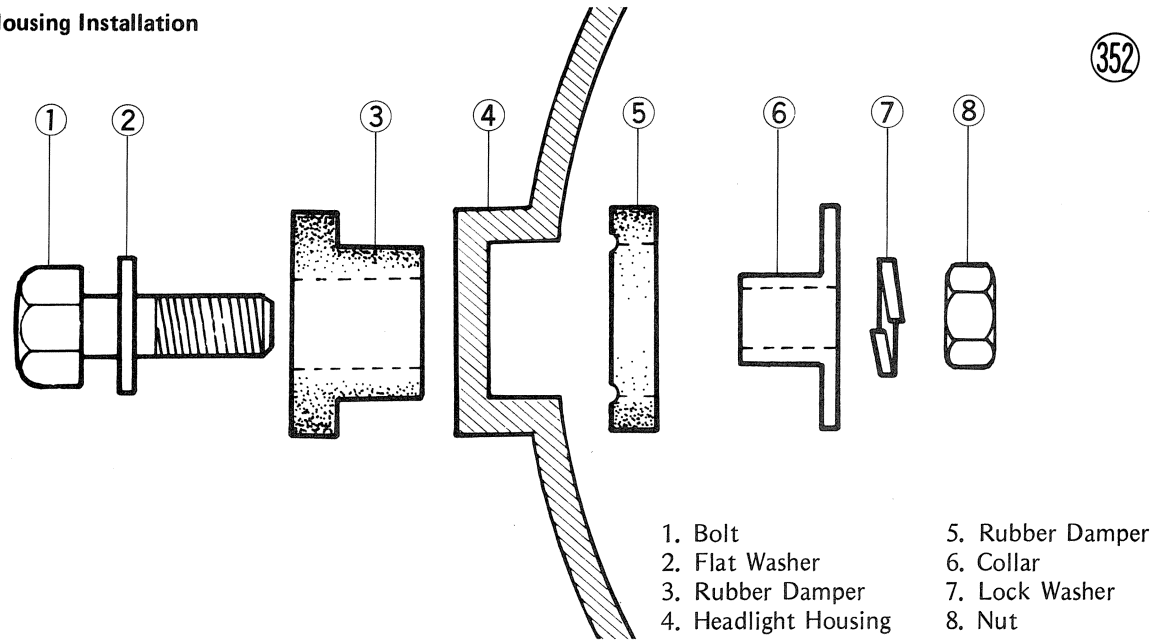

1. Bolt
2. Flat Washer
3. Rubber Damper
4. Headlight Housing
5. Rubber Damper
6. Collar
7. Lock Washer
8. Nut

●Remove the indicator lights (5) the same way as illuminator light removal (Fig. 350).

Installation Notes:

1. Use the bulbs shown in Table 7 for indicator light replacement. Also, refer to the table for light location by lead color. Example: The right turn signal socket takes the bulb with Black/Yellow gray wire.

Table 7 Indicator Lights

Bulb Wattage	Indicator Lights	Lead Color
12V 3.4W	Neutral	Green/Red, Brown
	High Beam	Black/Yellow, Red/Black
	Oil	Blue/Red, Brown
	Stop Lamp	Green/White, Brown
	Left Turn Signal	Black/Yellow, Green
	Right Turn Signal	Black/Yellow, Gray

2. Adjust the headlight vertically (Pg. 21).

IGNITION SWITCH

Removal:

●Take out the retaining screws (2), pull the bottom of the headlight unit out of its housing, and swing the unit out from the housing.
●Disconnect the headlight socket from the rear of the unit.
●Loosen the mounting bolts underneath the headlight housing.
●Disconnect the ignition switch wiring harness socket from the plug (4-pin) it connects to in the headlight housing, and push the socket out of the housing.
●Take out the headlight housing mounting bolts (2) and move the housing down slightly. Each bolt has a nut, lock washer, and flat washer.
●Take out the screws and lock washers (3 ea) from the bottom of the indicator light panel, and remove the lower cover.

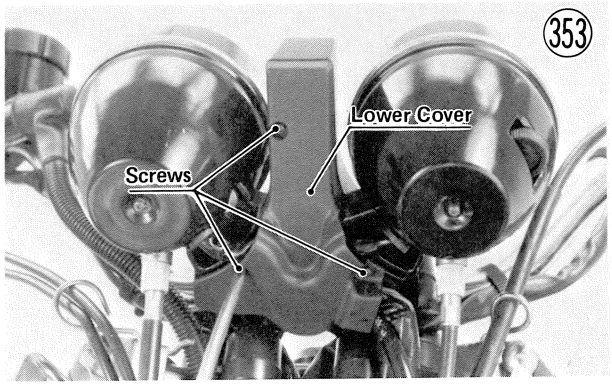

●Unscrew the ignition switch mounting nut, and pull out the ignition switch holder and ignition switch.

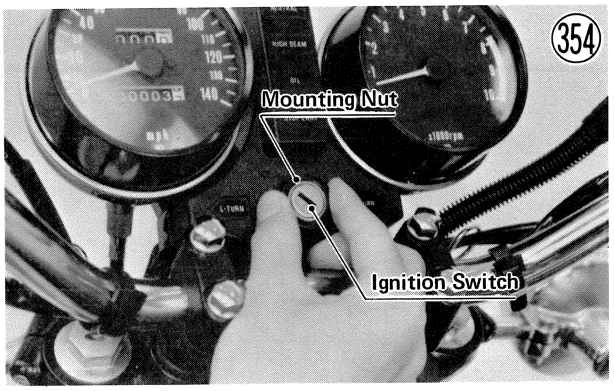

Installation:

●Fit the ignition switch and its holder in place, and screw the ignition switch mounting nut onto the switch.
●Install the lower cover and tighten the screws (3). Each screw has a lock washer.
●Connect the ignition switch wiring harness socket to its plug in the headlight housing.
●Mount the headlight housing in place and tighten its mounting bolts. The sequence is: mounting bolt, flat washer, fork cover, rubber damper, headlight housing, rubber damper, housing insert, lock washer and nut (Fig. 352).
●Connect the headlight plug to the headlight, fit the headlight into the housing, and tighten its retaining screws.
●Adjust the headlight vertically (Pg. 21).

TURN SIGNAL LIGHT (Burn out Replacement)

●Remove the lens mounting screws, and take off the lens.
●Press the bulb inwards, and holding the bulb in this position, twist it to the left and pull it out.
●Install a new 12 volt bulb of the correct wattage (see the wiring diagram).
●Fit the rubber gasket in place, if removed, and install the lens. Be careful not to over tighten the mounting screws.

TURN SIGNAL ASSEMBLY

Removal (front, either side):

●Take out the retaining screws (2), pull the bottom of the headlight unit out of its housing, and swing the unit out from the housing.
●Disconnect the headlight socket from the rear of the unit.
●Disconnect the turn signal gray lead in the headlight housing.
●Loosen the mounting bolts (2) underneath the headlight housing.
●Take out the headlight housing mounting bolts (2) and move the housing down slightly.
●Remove the nut and pull the front turn signal from the front fork cover stay.

Front Turn Signal Installation

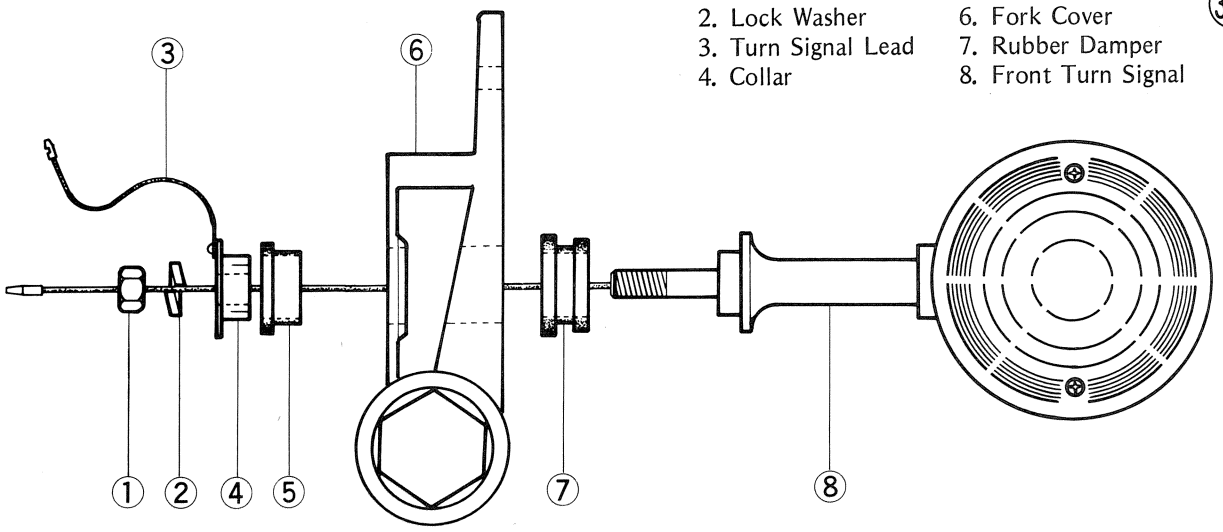

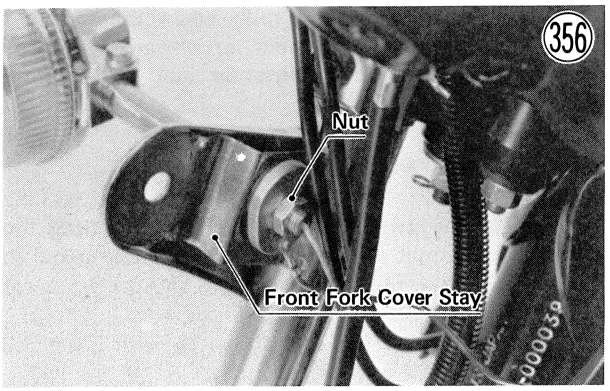

Installation Notes (front, either side):

1. If the front turn signal dampers have been removed, install them as shown in Fig. 355.
2. Connect the turn signal leads referring to Table 8.

Table 8 Turn Signal Lead Color

	Turn Signal Lead ↔ Main Wiring Harness Lead	
Right	Gray	↔ Gray
	Black/Yellow	↔ Black/Yellow
Left	Gray	↔ Green
	Black/Yellow	↔ Black/Yellow

3. Adjust the headlight vertically (Pg. 21).

Removal (rear, either side):

- Unlock the seat and swing it open.
- Disconnect the turn signal gray lead.

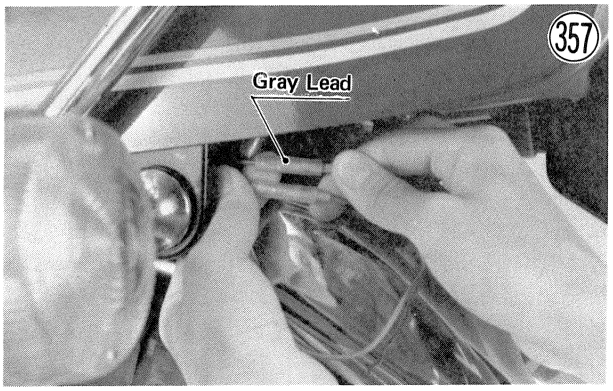

- Remove the nut and lock washer, and pull the rear turn signal from the frame.

Installation Notes (rear, either side):

1. If the rear turn signal dampers have been removed, install them as illustrated.

Rear Turn Signal Installation

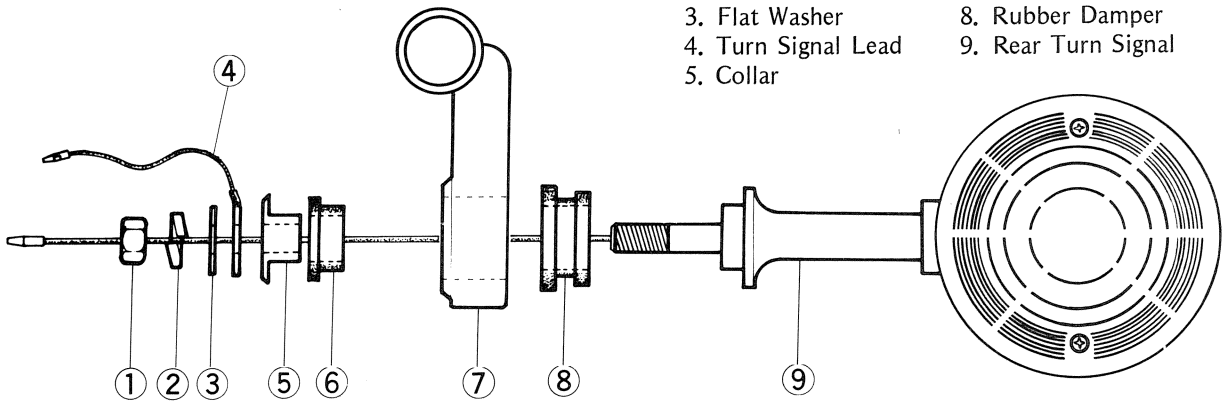

2. Connect the turn signal leads according to Table 8.

TAIL/BRAKE LIGHT (Burn out Replacement)

- Remove the lens mounting screws, and take off the lens.
- Press the bulb inwards, and holding the bulb in this position, twist it to the left and pull it out.

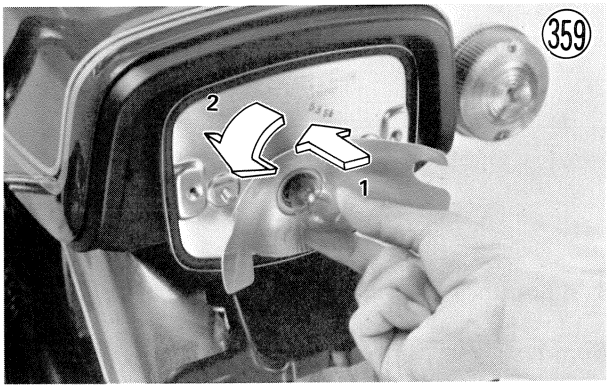

- Replace a burned out bulb with a new 12 volt bulb of the correct wattage (see the wiring diagram).
- Fit the rubber gasket in place, if removed, and install the lens. Be careful not to over tighten the mounting screws.

OIL PRESSURE INDICATOR SWITCH

Removal:

- Pull off the oil pressure indicator switch lead from the switch.

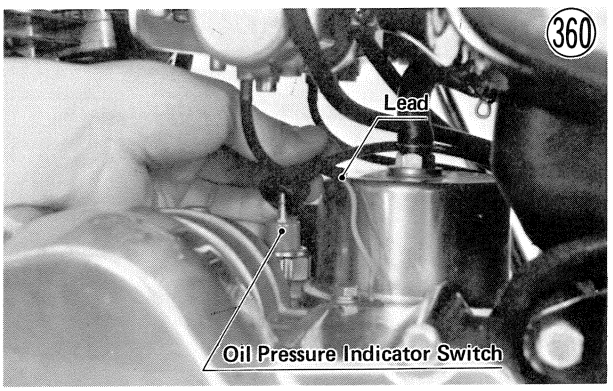

- Unscrew the oil pressure indicator switch from the crankcase.

Installation Notes:

1. Tighten the switch with 1.3 ~ 1.7 kg-m (9.5 ~ 12 ft-lbs) of torque.

FRONT BRAKE LIGHT SWITCH

Removal:

- Slide the rubber dust cover back, and disconnect the front brake light switch leads from the switch.

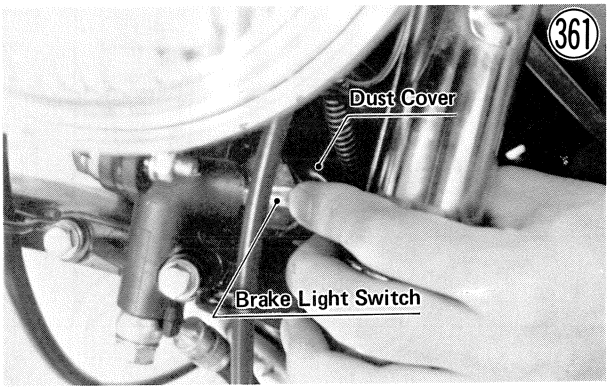

- Unscrew the front brake light switch from the 3-way joint.

CAUTION **If brake fluid spills when the switch is removed, painted or chromed surfaces may become damaged. Wipe up any spilled fluid immediately.**

Installation Notes:

1. Apply a small amount of a non-permanent locking agent to the switch threads before mounting the switch. So that no locking agent will get mixed in with the brake fluid, do not apply any on the lower one-fourth of the threads.
2. Tighten the front brake light switch with 2.6 ~ 3.0 kg-m (19.0 ~ 22.0 ft-lbs) of torque.
3. After the switch has been installed, bleed the front brake lines.

FRONT FORK

Removal (each side):

- Remove the front wheel (Pg. 79).
- Remove the bolts (3) that hold the front fender to the shock absorber.
- In case of left shock absorber removal, the caliper mounting bolts (2), and rest the caliper on some kind of stand so that the brake fluid pipe is not bent.
- If the shock absorber is to be disassembled after removal, loosen the top bolt now.

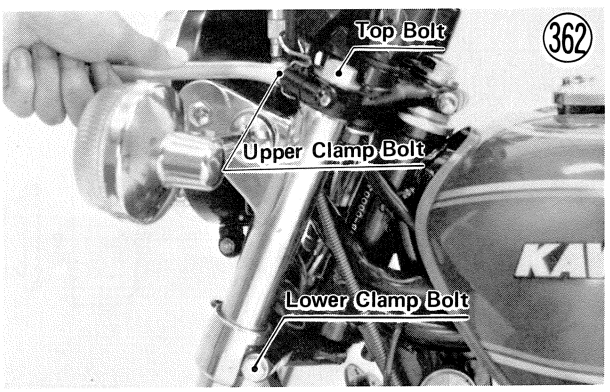

- Loosen the upper and lower clamp bolts.
- With a twisting motion, work the shock absorber down and out.

Installation (each side):

- For 1976 and 1977 models, slide the shock absorber up the lower and upper clamps until the upper surface of the top bolt flange is even with the upper surface of the stem head. For 1978 and later models, slide the shock absorber up until the upper end of the inner tube is 2 mm lower than the upper surface of the stem head. Tighten the upper clamp bolt to 1.6~2.2 kg-m (11.5~16 ft-lbs) of torque and the lower clamp bolt to 3.4~4.6 kg-m (25~33 ft-lbs).

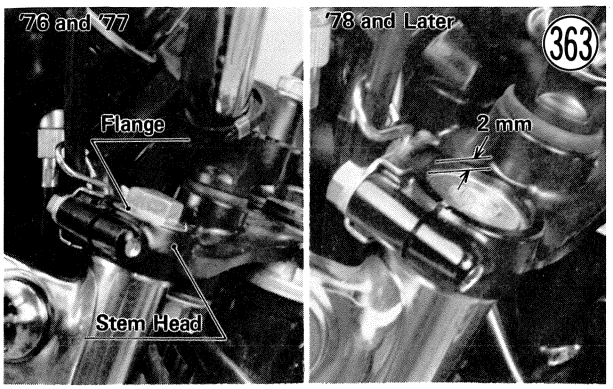

- If the top bolt was loosened during removal, tighten it to 2.5~3.0 kg-m (18.0~22.0 ft-lbs) of torque.
- Mount the caliper, tightening the caliper mounting bolts to 3.4~4.6 kg-m (25~33 ft-lbs) of torque. Each mounting bolt has a flat washer and lock washer.
- Install the fender bolts (with lock washers) through the guide holder plate, and position the plate between the front fender and the left front shock absorber.
- Mount the front wheel (Pg. 80).

Disassembly:

- Remove the top bolt ⑰, and pull out the spacer ⑲ ('76 and '77 models), spring seat ⑳ or ㊳, and spring ㉑.
- Pour the oil into a suitable container, pumping as necessary to empty out all the oil.
- Slide the dust seal ⑤ off the inner tube ㉒.
- Stop the cylinder ① from turning by using the front fork cylinder holder (special tool) ('76 and '77 models). Unscrew the Allen bolt ㊹ from the bottom of the outer tube ⑨, and then separate the inner tube from the outer tube by pulling it out. For '78 and later models, use the front fork cylinder holder handle and adapter (special tools: PN57001-183 and 57001-1011).

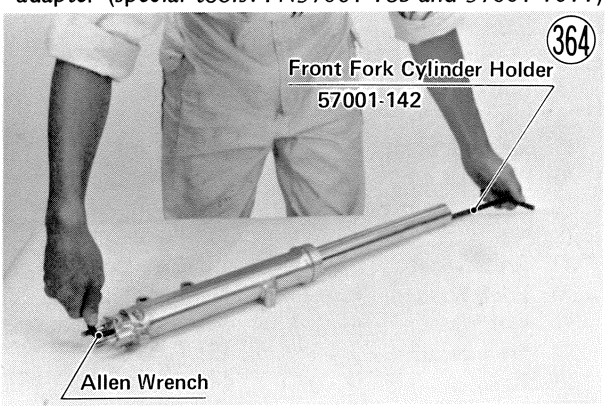

- Slide or push the cylinder and piston unit ① and its spring ③ out the top of the inner tube.
- Remove the cylinder base ④ out the top of the outer tube.
- For '76 and '77 models, remove the circlip inside the end of the inner tube and pull out the collar, non-return valve, spring, and valve seat.

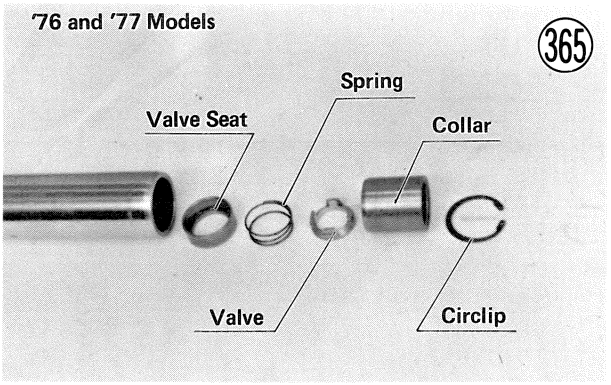

- For '76 and '77 models, remove the spring and circlip, and pull the piston off the cylinder.

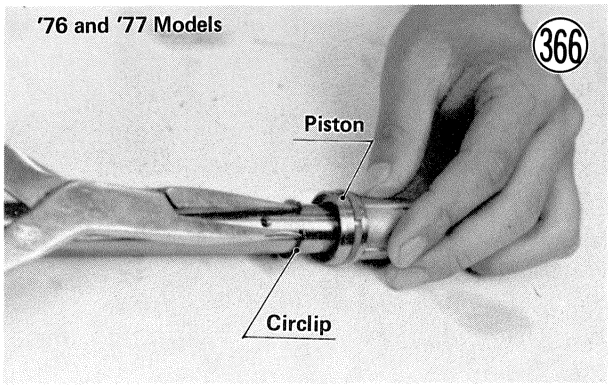

- Remove the retainer ⑥ from the outer tube with a sharp hook. Remove the washer ⑦, and then pull out the oil seal ⑧. It may be necessary to heat the outer tube around the oil seal before pulling it out.

Assembly Notes:

1. Using the front fork piston ring guide (special tool), fit the cylinder and piston unit in the inner tube bottom end before installing the collar in the inner tube ('76 and '77 models).

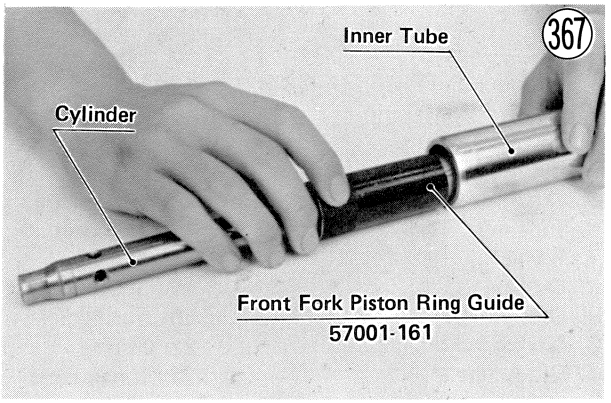

Front Fork

368

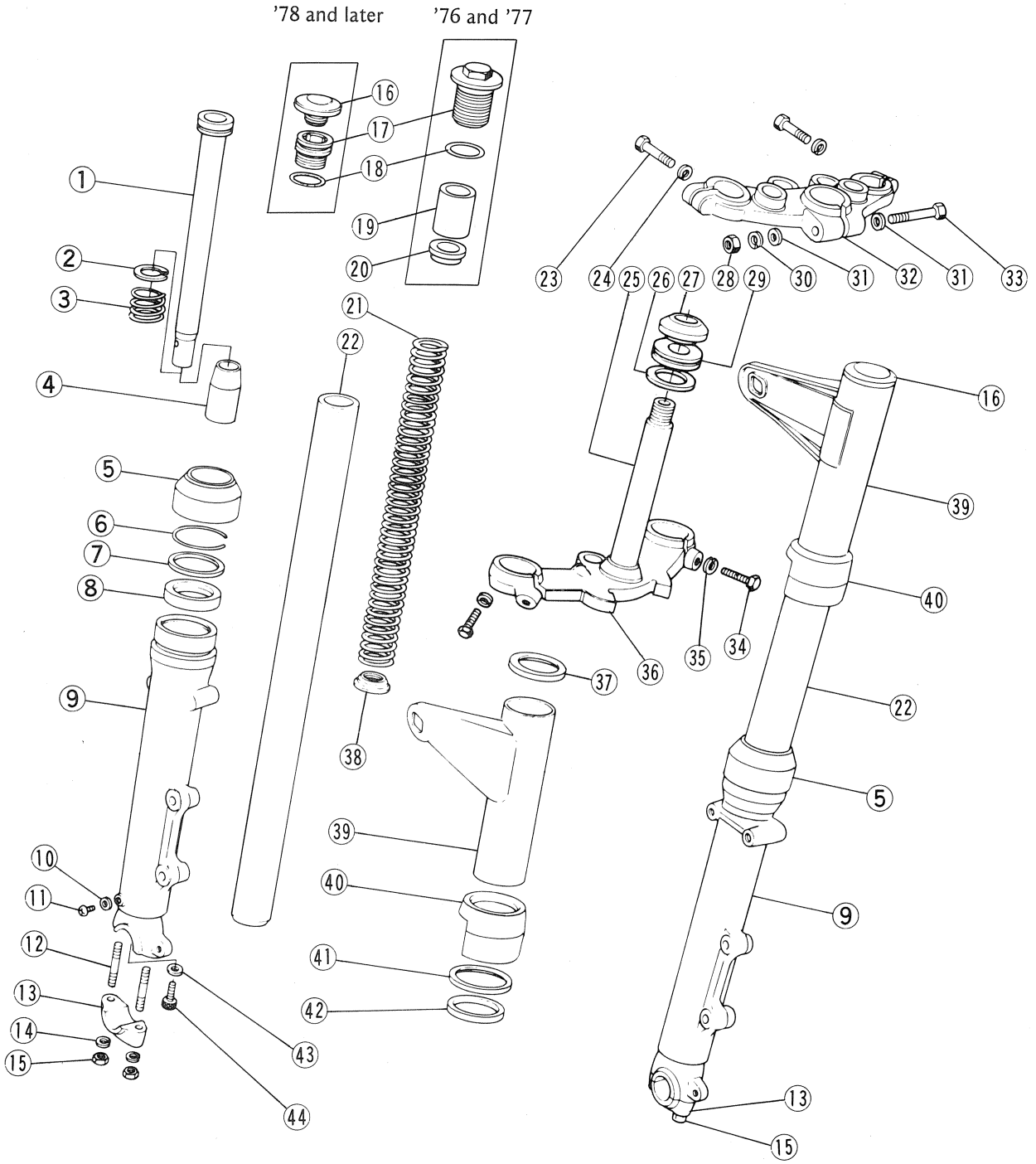

1. Cylinder and Piston Unit
2. Piston Ring
3. Spring
4. Cylinder Base
5. Dust Seal
6. Retainer
7. Washer
8. Oil Seal
9. Outer Tube
10. Gasket
11. Drain Screw
12. Stud
13. Axle Clamp
14. Lock Washer
15. Nut
16. Rubber Cap
17. Top Bolt
18. O Ring
19. Spacer
20. Spring Seat
21. Spring
22. Inner Tube
23. Bolt
24. Lock Washer
25. Steering Stem
26. Washer
27. Lower Inner Race
28. Nut
29. Grease Seal
30. Lock Washer
31. Flat Washer
32. Stem Head
33. Bolt
34. Bolt
35. Lock Washer
36. Stem Base
37. Ring Cap
38. Spring Seat
39. Fork Cover
40. Base Cover
41. Damper Ring
42. Rubber Damper
43. Gasket
44. Allen Bolt

2. Apply a liquid gasket to both sides of the gasket ㊸, apply a non-permanent locking agent to the Allen bolt, and tighten it in place using the special tool(s) to stop the cylinder from turning. The tightening torque for the Allen bolt is 2.0 ~ 2.6 kg-m (14.5 ~ 19.0 ft-lbs).
3. Replace the oil seal with a new one, apply oil to the outside, and install it with the front fork oil seal driver (special tool).

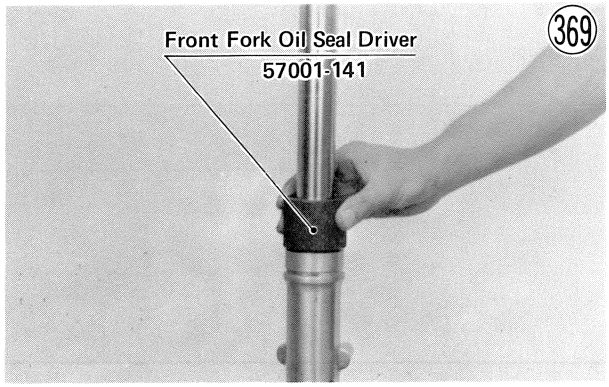

4. For 1976 and 1977 models, refill with 171 ~ 180 cc of fresh SAE 10W oil. For 1978 and later models, refill with 176 ~ 184 cc of fresh SAE 15W oil.
5. After installing the front shock absorbers, tighten the top bolts to 2.5 ~ 3.0 kg-m (18.0 ~ 22.0 ft-lbs) of torque.

STEERING STEM

Removal:

- Remove the fuel tank (Pg. 32).
- Remove the speedometer cable (Pg. 97).
- Disconnect the tachometer cable at the tachometer with pliers.
- Remove the front wheel (Pg. 79).
- Remove the headlight unit (Pg. 98).
- Disconnect all the leads and plugs in the headlight housing.
- Disconnect the front brake light switch leads from the switch.
- Remove the headlight housing mounting bolt underneath the headlight housing.
- Remove the headlight housing mounting bolts (2) and remove the headlight housing. Each bolt has a flat washer, lock washer, and nut.

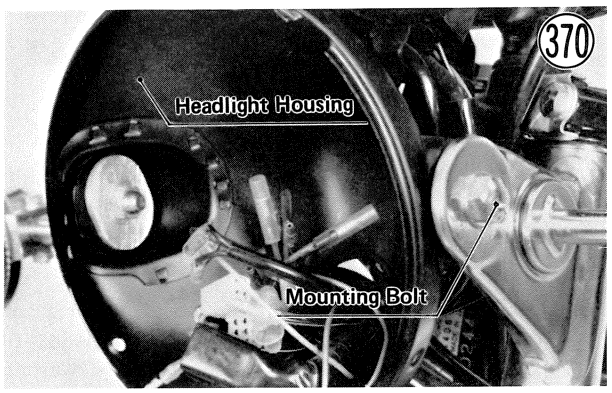

- Remove the clamp bolts (2), and take off the master cylinder. There is a flat washer for each master cylinder clamp bolt (Fig. 300 on Pg. 85).
- Remove the 3-way joint mounting bolts, lock washers, and flat washers (2 ea) with the two cable guides and the headlight housing stay.

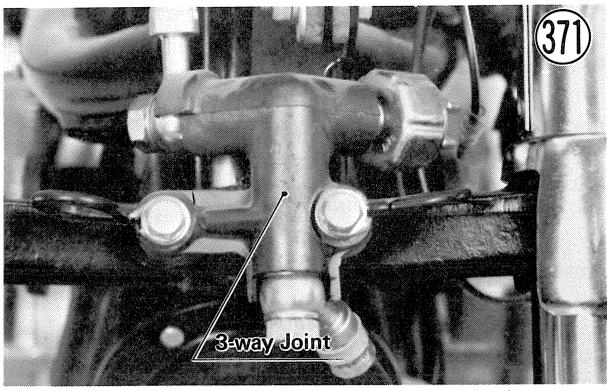

- Remove the upper clamp bolt of the right front shock absorber and cable guide.

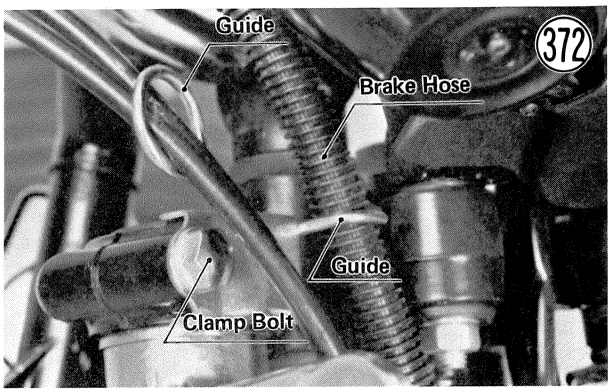

- Remove the caliper mounting bolts, lock washers, and flat washers (2 ea), and remove the caliper together with the master cylinder, upper brake hose, 3-way joint, and lower brake hose.
- Loosen the locknut, and turn out fully the adjuster at the center of the clutch cable to give the cable plenty of paly.
- Remove the clutch adjusting cover.
- Loosen the locknut, and turn in the clutch adjusting screw a couple of turns to give the clutch cable plenty of play (Fig. 337 on Pg. 96).
- Loosen the knurled locknut on the clutch lever holder, and screw in the adjuster, lining up the slots in the clutch lever, knurled locknut, and adjuster. Free the inner cable from the lever.

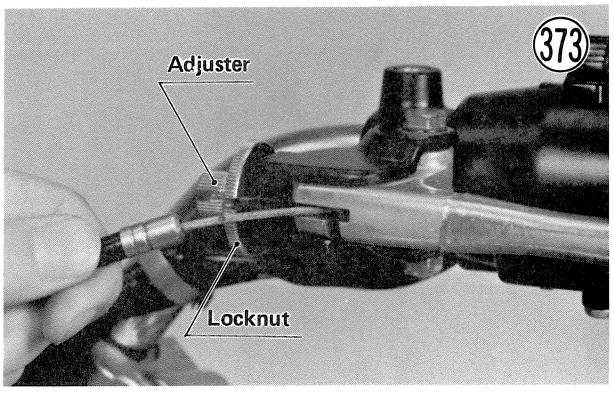

- Remove the straps which hold the right switch wiring harness to the handlebar.
- Disconnect all the leads and plugs from the left and right switch housings under the frame top tube.
- Pull the right switch wiring harness out through the space between the stem head and the instrument unit.
- Remove the right switch housing screws (2), and open the housing.
- Loosen the upper clamp bolt of the left front shock absorber.
- Remove the rubber caps from the top of the inner tubes (1978 and later models).
- Loosen the stem head clamp bolt, and then remove the stem head bolt, lock washer, and flat washer.
- Tap lightly on the bottom of the stem head with a mallet, and then remove the steering stem head together with the handlebar, meters, and ignition switch. Slide the handlebar from the throttle grip and the right switch housing.

CAUTION **Place the stem head so that the correct side of the meter is up. If a meter is left upside down or sideways for any length of time, it will malfunction.**

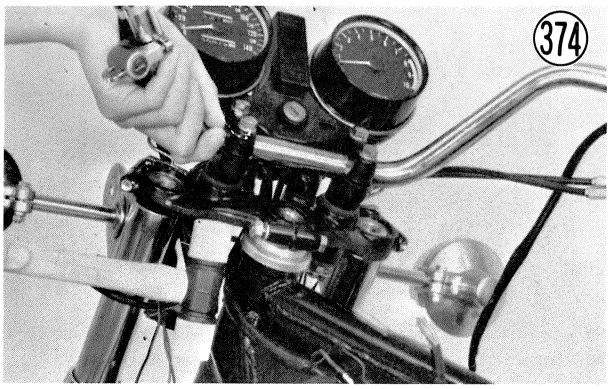

- Remove the fork covers with the turn signals. Each fork cover has a ring cap at the top; and stem base cover, damper ring, and rubber damper at the bottom.
- Remove the fender bolts and lock washers (6 ea), and take off the fender.
- Loosen the lower clamp bolts, and pull out each shock absorber with a twisting motion.
- Push up on the stem base, and remove the steering stem locknut with the stem nut wrench (special tool); then remove the steering stem and stem base (single unit). As the stem is removed, some of the steel balls will drop out of the lower outer race. Remove the rest. There are 20 steel balls in the lower outer race.

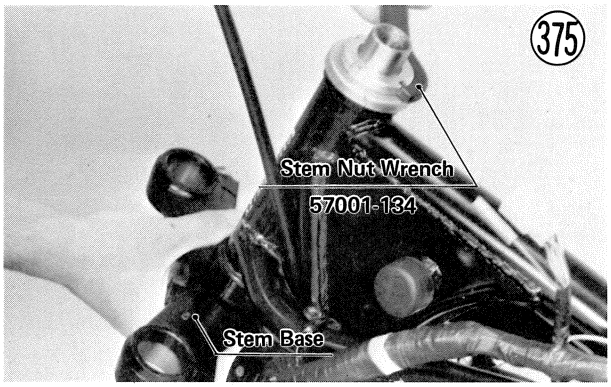

- Remove the steering stem cap, the upper inner race, and the upper steel balls (19).

Installation:

- Apply grease to the upper and lower outer races in the head pipe so that the steel balls will stick in place during stem insertion. Install the upper steel balls (19) and lower steel balls (20). All upper and lower steel balls are one size.



- Put on the upper inner race and steering stem cap. Insert the steering stem into the head pipe, and tighten the steering stem locknut to 2.7 ~ 3.3 kg-m (19.5 ~ 24 ft-lbs) of torque.
- Run the inner tube of each shock absorber up through its clamp in the stem base. Temporarily tighten the lower clamp bolt on each side to hold each shock absorber in place with its inner tube protruding about 200 mm above the steering stem base.
- Install the rubber damper, damper ring, base cover, fork cover, and ring cap on each tube in this order.
- Slide the right side of the handlebar through the right switch housing, and into the throttle grip assembly.
- Install the stem head assembly and the stem head lock washer and flat washer (flat side facing down). Screw in the stem head bolt loosely. Be sure the wiring harnesses and all cables go between the stem head and the front fork covers.
- Put together the right switch housing, and tighten its screws. The upper half of the housing has a small projection which fits into a hole in the handlebar. The front switch housing screw is longer than the rear screw.

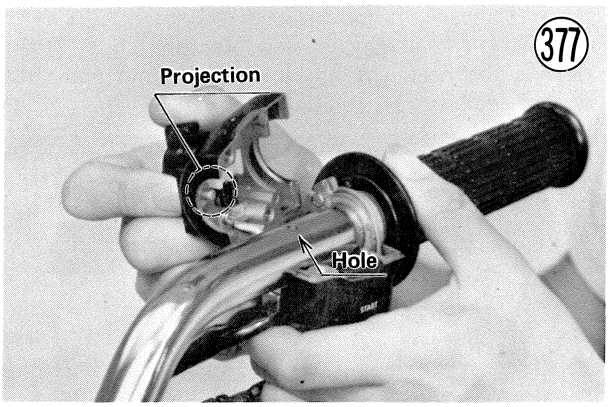

- Install the caliper on the left shock absorber. Tighten the mounting bolts to 3.4~4.6 kg-m (25~33 ft-lbs) of torque. Each bolt has a lock washer and flat washer.

- Install the 3-way joint, placing the headlight housing stay between the 3-way joint and the steering stem base. Be sure to include the cable guide with each bolt. Tighten the bolts to 0.7 ~ 0.9 kg-m (61 ~ 78 in-lbs) of torque.
- Install the master cylinder on the handlebar with the small projection on the clamp facing the throttle grip (Fig. 301 on Pg. 85). Tighten first the upper clamp bolt and then the lower bolt, both to 0.6 ~ 0.9 kg-m (52 ~ 78 in-lbs) of torque. Each clamp bolt has a flat washer.
- Install the upper clamp bolt of the right shock absorber with the cable guide. The front brake hose goes through the guide as shown in Fig. 372.
- For each shock absorber, loosen the lower clamp, and slide the shock absorber up through the upper clamp until the upper end of the inner tube is 2 mm lower than the upper surface of the stem head (1978 and later models). Tighten the upper clamp bolts to 1.6 ~ 2.2 kg-m (11.5 ~ 16.0 ft-lbs) of torque. For 1976 and 1977 models, slide the each shock absorber up through the lower and upper clamps until the upper surface of the top bolt flange is even with the upper surface of the stem head.

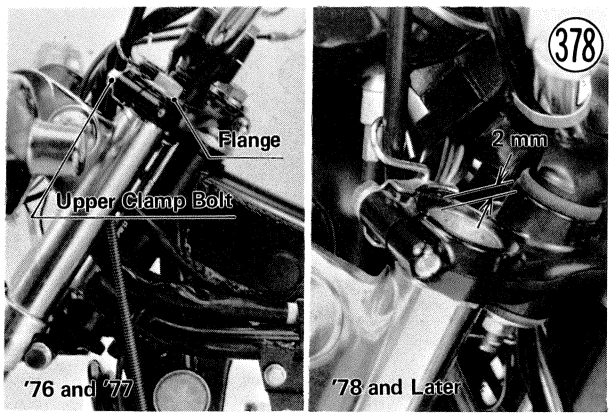

- Install the rubber cap on each top of the inner tube (1978 and later models).
- Tighten the stem head bolt to 4 ~ 5 kg-m (29 ~ 36 ft-lbs) of torque and the rear clamp bolt to 1.6 ~ 2.2 kg-m (11.5~16.0 ft-lbs) of torque.
- Tighten the front fork lower clamp bolts to 3.4 ~ 4.6 kg-m (25~33 ft-lbs) of torque.
- Run the right switch wiring harness between the stem head and the instrument unit, going to the right of the head pipe and along the frame top tube.

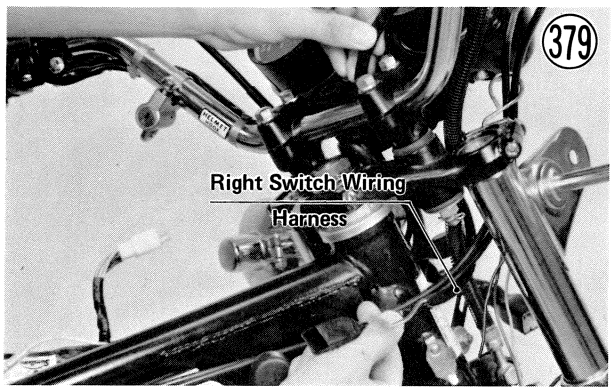

- Run the left switch wiring harness to the left of the head pipe and along the frame top tube.
- Connect the right and left switch leads and plugs to the same color leads of the main wiring harness.
- Run the front brake light switch lead between the stem head and the instrument unit.
- Strap the right switch housing wiring harness back onto the handlebar.
- Fit the tip of the clutch cable back into the clutch lever.
- Run the tachometer cable through its guide at the 3-way joint, fit the inner cable into the tachometer, and tighten the cable nut with pliers.
- Connect the front brake light switch leads to the switch. The leads may connect to either terminal.
- Run the plugs, sockets, and wiring into the headlight housing, and mount the headlight housing, tightening its mounting bolts. The sequence is mounting bolt, flat washer, fork cover, rubber damper, headlight housing, rubber damper, housing insert, and nut (Fig. 352 on Pg. 99).
- Insert the mounting bolt underneath the headlight housing.
- Connect the plugs, sockets, and leads in the headlight housing. Connect the same color leads to the same color leads.
- Install the headlight unit (Pg. 98).
- Install the front fender between the fork legs. First screw in the right side 3 mounting bolts, insert the guide holder plate between the left shock absorber and the fender, then install the left side 3 mounting bolts. Tighten the bolts securely. Each bolt has a lock washer.
- Secure the lower brake hose in its guide. Be sure the rubber grommet is in place.
- Install the front wheel (Pg. 80).
- Install the speedometer cable (Pg. 128).
- Check the steering and adjust it, if necessary (Pg. 19).
- Install the fuel tank (Pg. 32).
- Check the front brake and bleed the system, if necessary (Pg. 161).
- Adjust the clutch (Pg. 16).
- Check the throttle cables and adjust, if necessary (Pg. 30).
- Adjust the headlight (Pg. 21).
- Adjust the rear view mirrors.

STEERING STEM BEARING

Removal:

- Remove the steering stem (Pg. 105).

●To remove the outer races pressed into the head pipe, insert a bar into the head pipe, and hammer evenly around the circumference of the opposite race to drive it out.

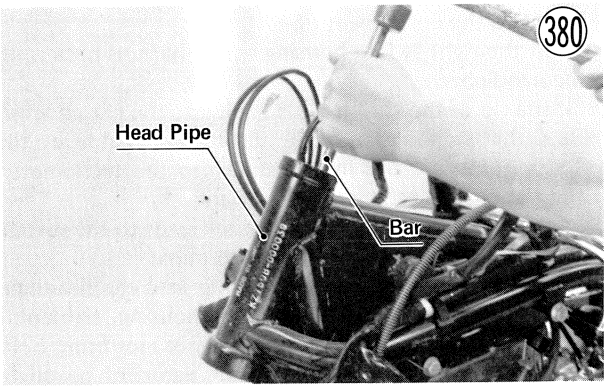

●Remove the lower inner race, which is pressed onto the steering stem, with a stem bearing puller and adapter (special tools). Be careful not to damage the grease seal under the race during race removal.

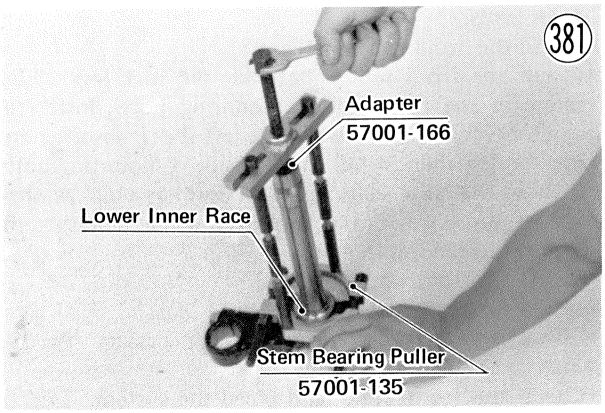

Installation:

●Apply oil to the outer races, and drive them into the head pipe using the stem cup driver and the bearing driver holder (special tools).

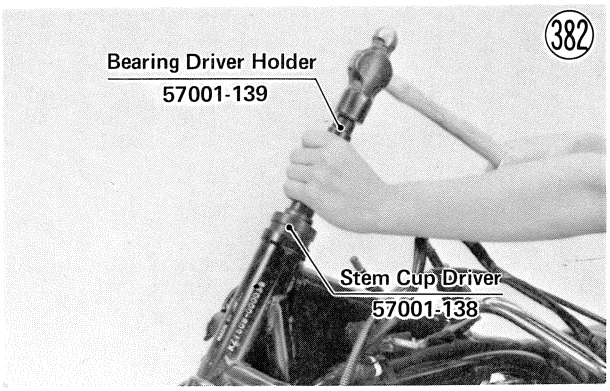

●Apply oil to the lower inner race, and drive it onto the steering stem using the stem bearing driver (special tool).

NOTE: Replace the grease seal with a new one, if damaged.



●Install the steering stem (Pg. 106).

REAR SHOCK ABSORBERS

Removal (each side):

●Set the motorcycle up on its center stand.
●Remove the muffler (Pg. 32).
●Remove the passenger grab bar mounting bolts (2), loosen the shock absorber cap nuts (2), and take off the bar.

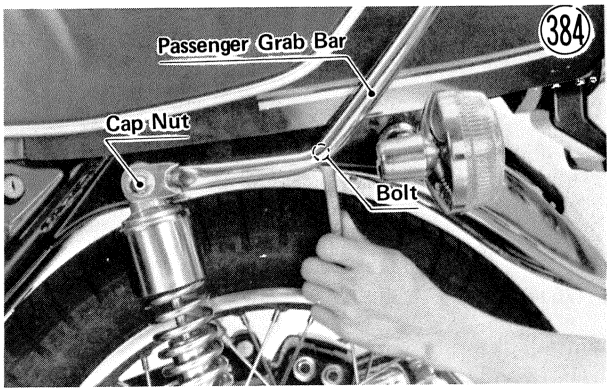

●Lift up on the rear wheel as necessary to avoid damaging the shock absorber bolt threads, and remove the shock absorber bolt.
●Remove the cap nut, lock washer, and flat washers, and pull off the shock absorber.

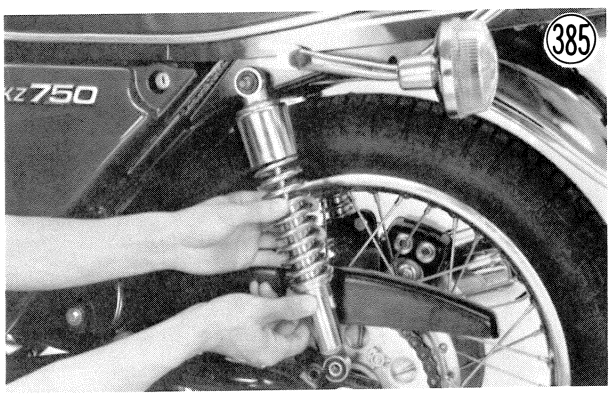

Installation (each side):

- Fit the shock absorber on its stud.
- Lift up on the rear wheel, insert the shock absorber bolt with its locknut, and tighten with 2.6 ~ 3.5 kg-m (19.0~25 ft-lbs) of torque.
- Install the large flat washer, small flat washer, and cap nut, and then fit the passenger grab bar into place between the flat washers on each side.
- Install and tighten the bar mounting bolts (2). Each bolt has a lock washer and flat washer.
- Tighten each cap nut with 2.6 ~ 3.5 kg-m (19.0 ~ 25 ft-lbs) of torque.
- Mount the muffler (Pg. 32).

SWING ARM

Removal:

- Set the motorcycle up on its center stand.
- Remove the mufflers (Pg. 32).
- Remove the rear wheel (Pg. 87).
- Remove the rear caliper (Pg. 90).
- Pull off the rear brake hose from the guides on the swing arm, and secure the brake hose to some place higher than the rear brake reservoir to prevent fluid from flowing out.

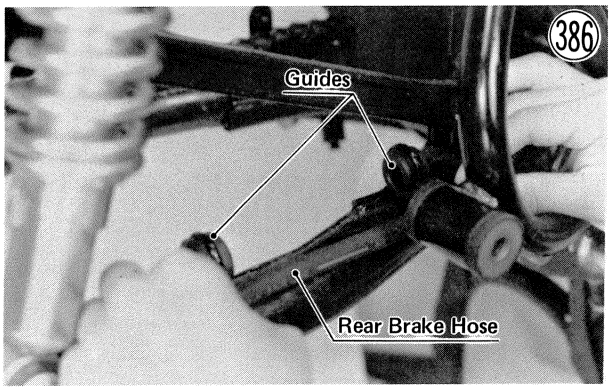

- Remove the mounting bolt from each shock absorber bottom. A lock washer comes off with the bolt.
- Move the swing arm up and down to check for abnormal friction.
- Remove the pivot shaft nut and pull out the pivot shaft.

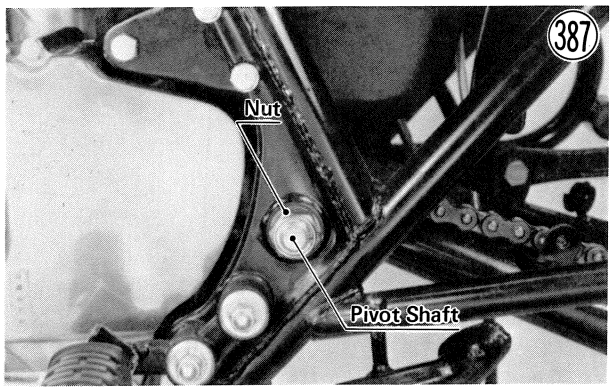

- Pull back the swing arm. A cap and an **O** ring on each side of the pivot will also drop off.

Installation:

- Install the caps and **O** rings, one on each end of the pivot of the swing arm, and put the left side of the swing arm through the drive chain loop.
- Position the pivot of the swing arm into its place in the frame, and slide in the pivot shaft from the right to left. A screwdriver inserted into the left side of the pivot will keep the left cap in place.

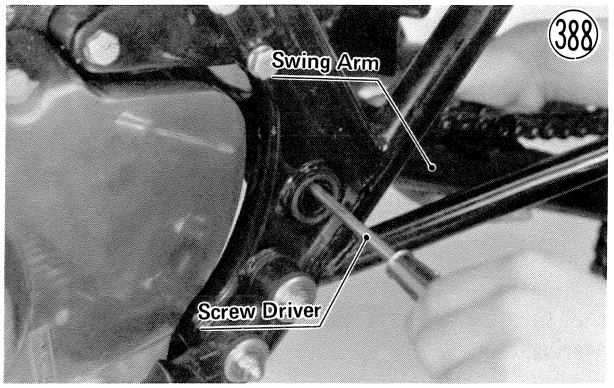

- Install the pivot shaft nut and tighten the nut with 8~12 kg-m (58~87 ft-lbs) of torque.
- Install the rear shock absorber bolts and lock washers, tightening each bolt with 2.6 ~ 3.5 kg-m (19.0 ~ 25 ft-lbs) of torque.
- Install the rear caliper (Pg. 91).
- Secure the brake hose in its guides with its rubber grommet, and install the brake hose fitting to the caliper tightening its banjo bolt with 2.2 ~ 2.8 kg-m (16 ~ 20 ft-lbs) of torque. There is a flat wahser for each side of the fitting.
- Fit the right side cover.
- Install the rear wheel (Pg. 87).
- Install the mufflers (Pg. 32).
- Refill the brake lines and bleed air from the lines (Pg. 161).

Disassembly:

NOTE: As swing arm bushes will be damaged upon removal, be sure to have new ones on hand prior to disassembly.

- Pull off the cotter pin ⑧ from the torque link bolt ⑮. Take out the nut ⑨ and bolt, and remove the torque link ⑭ from the swing arm ④.

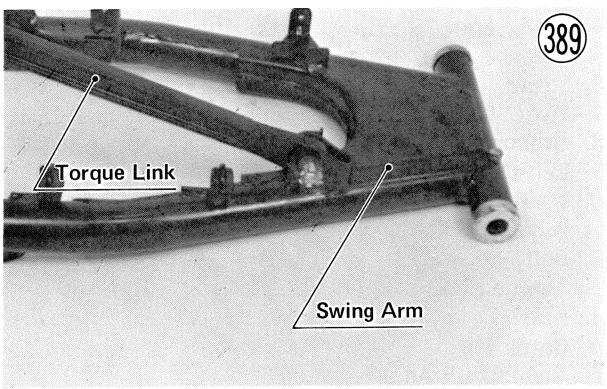

- Pull out the swing arm sleeve .
- Insert a bar into one side, hammering on it lightly to knock out the bush ('76 and '77 models) or needle bearings ('78 and later models) on the opposite side.

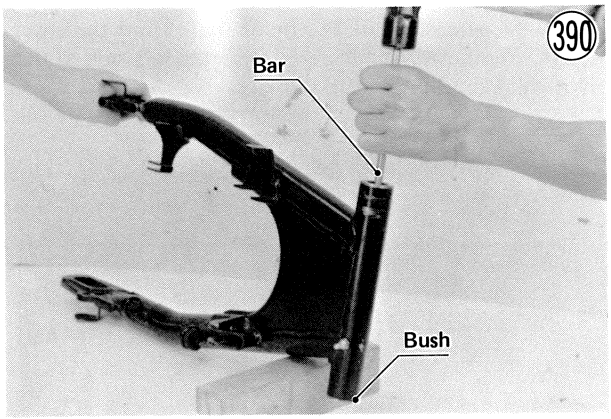

- Use the bar again to knock out the other bush or bearings.

Assembly Notes:

1. Replace the bushes with new ones if either one has worn past the service limit (Pg. 169) or has been removed. Apply oil to the bushings before installing them with a press ('76 and '77 models).
2. Wipe the old grease off the swing arm sleeve, and inspect the swing arm sleeve (Pg. 169). Apply fresh grease, especially in each sleeve groove ('76 and '77 models).

Swing Arm Sleeve Lubrication

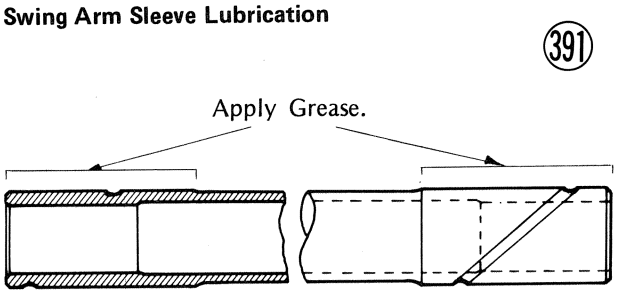

Swing Arm

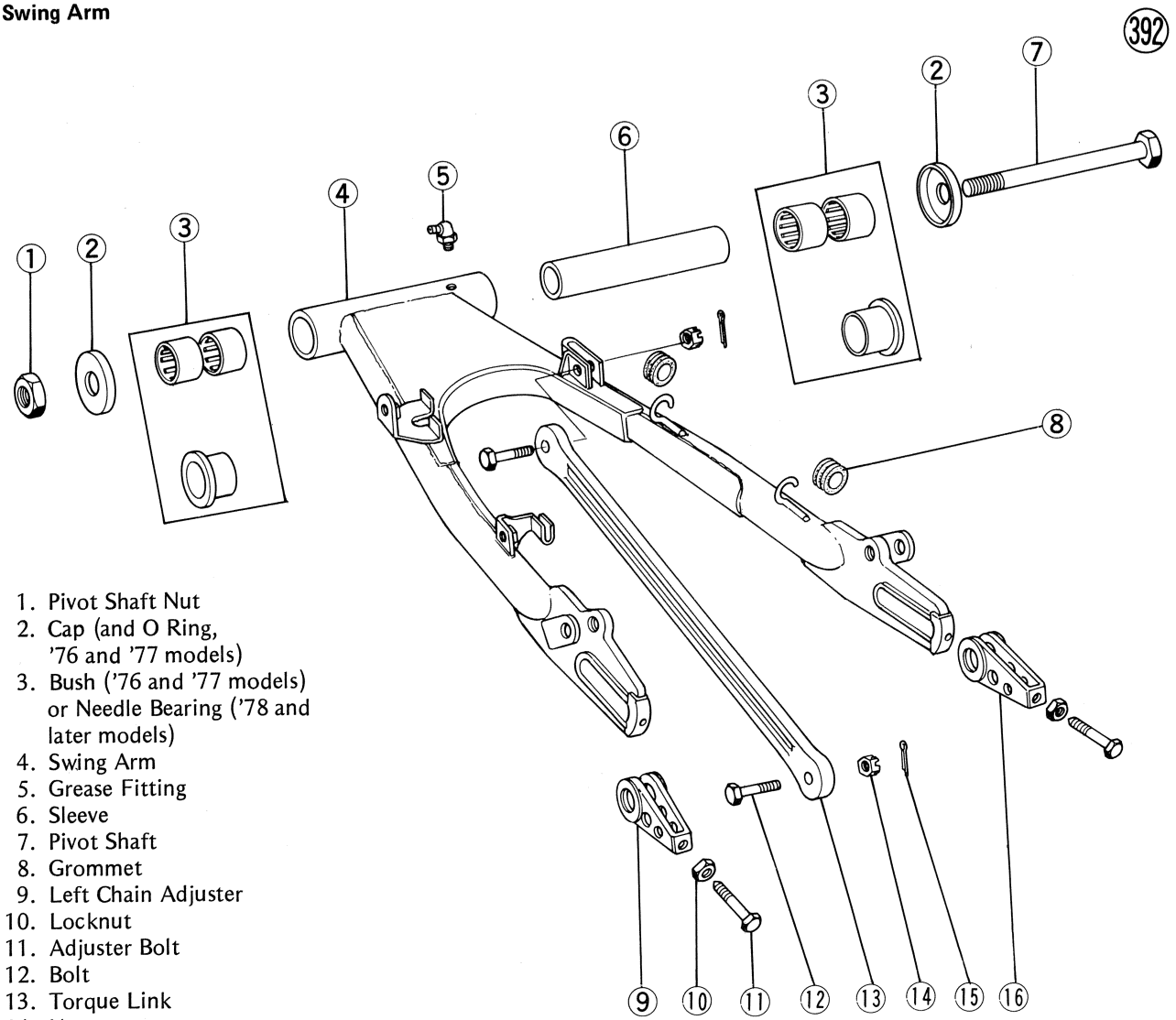

1. Pivot Shaft Nut
2. Cap (and O Ring, '76 and '77 models)
3. Bush ('76 and '77 models) or Needle Bearing ('78 and later models)
4. Swing Arm
5. Grease Fitting
6. Sleeve
7. Pivot Shaft
8. Grommet
9. Left Chain Adjuster
10. Locknut
11. Adjuster Bolt
12. Bolt
13. Torque Link
14. Nut
15. Cotter Pin
16. Right Chain Adjuster

3. Inspect the swing arm sleeve (Pg. 169), and replace it with a new one if it has worn past the service limit or is damaged. Also, replace all the needle bearings whenever the sleeve is replaced ('78 and later models).
4. Replace the needle bearings with new ones if either one has been damaged or removed. Apply oil to the outside surface of the bearings before installing them with a press ('78 and later models).
5. Install the torque link and tighten the torque link nut with 2.6~3.5 kg-m (19.0~25 ft-lbs) of torque, insert a new cotter pin and bend both ends.
6. Adjust the drive chain (Pg. 17) after installing the swing arm.

DRIVE CHAIN

Removal:

WARNING **The chain must not be cut for installation, as this may result in subsequent chain failure and loss of control.**

- Remove the mufflers (Pg. 32).
- Remove the rear wheel (Pg. 87).
- Remove the swing arm (Pg. 109).
- Remove the engine sprocket (Pg. 55) and take off the chain.

Installation:

- Install the engine sprocket (Pg. 55).
- Install the swing arm (Pg. 109).
- Install the rear wheel (Pg. 87).
- Install the muffler (Pg. 32).
- Adjust the drive chain (Pg. 17).

Maintenance

AIR CLEANER

A properly maintained air cleaner ensures that only clean, filtered air is supplied through the carburetor into the engine. If the air is supplied directly without filtering, dirt and dust from the air will clog carburetor passages causing the engine to run poorly. The dust that enters the engine will also act like grinding compound, wearing down the cylinders, pistons, and rings. If the air cleaner element is damaged, the result will be the same as if no element were used.

An air cleaner element clogged with dirt chokes the air supply to the engine, resulting in an overly rich fuel/air mixture and inefficient combustion. This in turn causes overheating from carbon build-up, and reduced engine power.

Air Cleaner

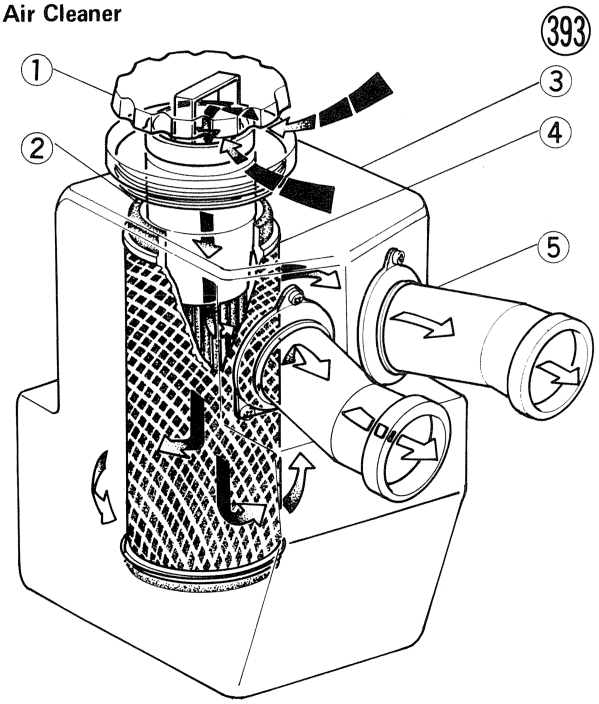

1. Air Cleaner Cap
2. Element
3. Air Cleaner Housing
4. Element Frame
5. Intake Duct

Cleaning and replacement

The air cleaner element must be cleaned periodically (Pg. 195). In extremely dry, dusty areas, the element will need to be cleaned more often. After riding through rain or on muddy roads, the element should be cleaned immediately.

Remove the air cleaner element (Pg. 30). Clean it in a bath of a high flash-point solvent, and then dry it from the inside using compressed air. Since this is a dry-type element, do not use kerosene or any fluid which would leave the element oily.

WARNING **Clean the element in a well-ventilated area, and take care that there is no spark or flame anywhere near the working area. Because of the danger of highly flammable liquids, do not use gasoline or low flash-point solvents to clean the element.**

Since repeated cleaning opens the pores of the element, replace it with a new one in accordance with the periodic maintenance chart (Pg. 195). Also, if there is a break in the element material or any other damage to the element, replace the element with a new one.

CARBURETORS

The carburetors perform the function of mixing the fuel and air in the proportions necessary for good engine performance at varying speeds and loads. In order for them to function satisfactorily, they must be properly adjusted and maintained. The throttle cable adjustment (Pg. 13) and the pilot screw, idling, and synchronizing adjustments (Pg. 14) are covered in the Adjustment Section. The discussion here concerns the fundamentals

Carburetor Construction

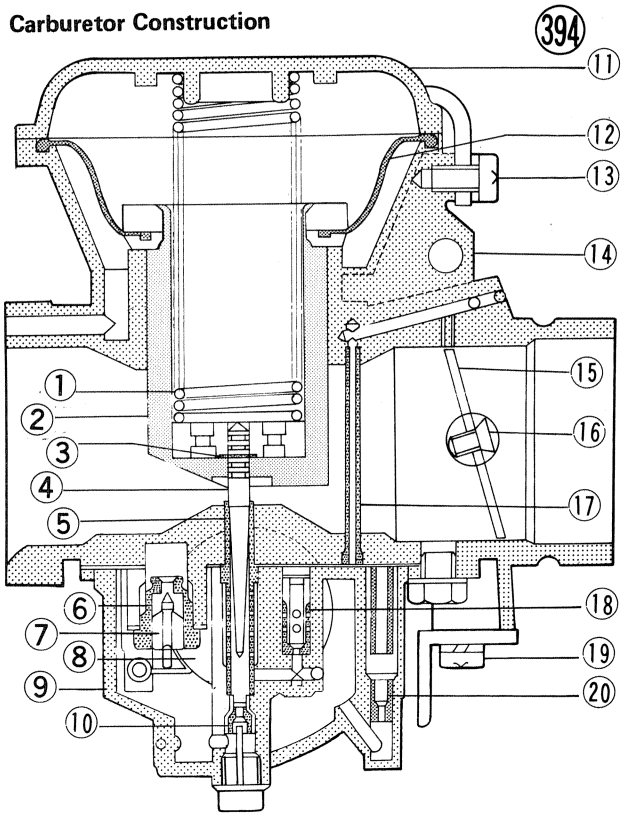

1. Spring
2. Vacuum Piston
3. Clip
4. Jet Needle
5. Needle Jet
6. Float Valve Seat
7. Float Valve Needle
8. Float
9. Float Bowl
10. Main Jet
11. Carburetor Cap
12. Diaphragm
13. Screw
14. Carburetor Body
15. Butterfly Valve
16. Screw
17. Pilot Passage Pipe
18. Pilot Jet
19. Screw
20. Starter Jet

Carburetors

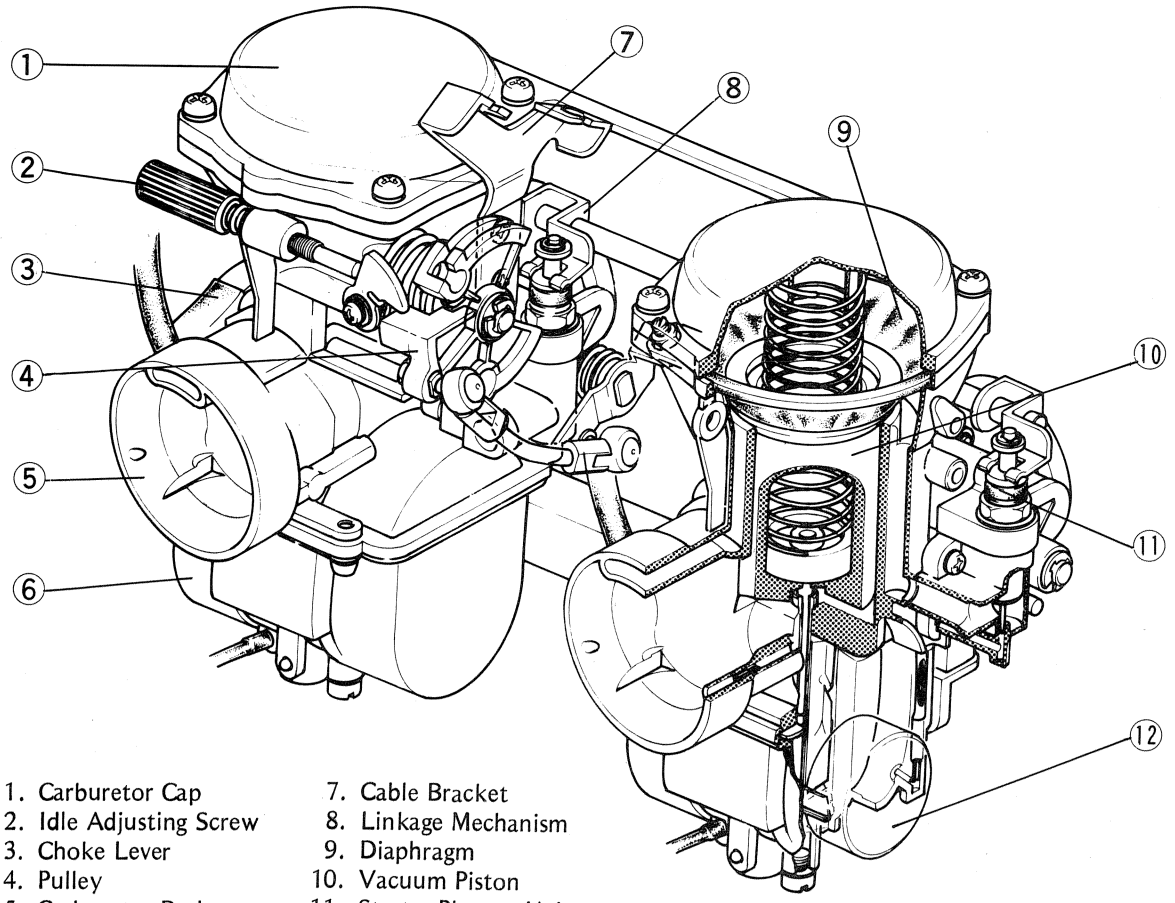

1. Carburetor Cap
2. Idle Adjusting Screw
3. Choke Lever
4. Pulley
5. Carburetor Body
6. Float Bowl
7. Cable Bracket
8. Linkage Mechanism
9. Diaphragm
10. Vacuum Piston
11. Starter Plunger Unit
12. Float

of carburetor operation, special adjustments, and the checking and replacement of carburetor parts.

A linkage mechanism turns each carburetor butterfly valve the same amount in response to throttle grip movement so that the carburetors operate in unison. As the throttle grip is turned counterclockwise, the throttle accelerator cable turns the carburetor pulley. Through the linkage mechanism the pulley opens the butterfly valves. As the throttle grip is turned clockwise or is released, the linkage mechanism return spring, together with the throttle decelerator cable, closes the butterfly valves.

One of the basic principles in carburetor operation is that the pressure exerted by a moving body of air is less than atmospheric pressure. As the engine draws air in through the carburetor bore, the air pressure in the carburetor bore is less than the air pressure in the float chamber, which is vented to the atmosphere. This difference in air pressure forces fuel up through passages into the carburetor bore, where it is atomized by the high-speed air flowing into the engine.

Another important principle is the Venturi Principle, which states that when an air passage narrows, moving air flows faster, exerting even less pressure. For example, at low speeds (0 ~ ¼ throttle) the vacuum piston is at its lowest position, forming what is called the "primary venturi". In this position, the vacuum piston constricts the air passage to increase air flow speed over the jets. Thus, even at low engine speeds, there is enough pressure differential to force the necessary amount of fuel into the air stream.

The amount of fuel passing through a jet depends both on the size of the jet (variable in the case of the needle jet) and on the speed of the air flow over the jet. The speed of this air flow is in turn determined both by the engine rpm and by the dimensions of the passage (varied by the vacuum piston) just above the jet. The size of the jet openings, the various dimensions of the air passages, and the engine rpm are correlated through carburetor design so that, when properly adjusted, the carburetor meters the fuel and air in the correct proportions at different throttle openings.

The ratio of fuel-to-air at different throttle openings depends on a number of factors, but alteration of the ratio is primarily controlled by the following:

0 ~ ¼ throttle	pilot screw
¼ ~ ¾ throttle	jet needle position
¾ ~ 1 throttle	main jet size

The carburetor specifications (Table 11) have been chosen for best all around performance, and ordinarily will not require any change. However, sometimes an alteration may be desirable for improved performance under special conditions when proper mixture is not obtained after the carburetor has been properly adjusted,

and all parts cleaned and found to be functioning properly. For example, the quantity of air entering the carburetor bore is less at high altitude due to the lower atmospheric pressure. To obtain the proper carburetor fuel/air mixture, it may be necessary to raise the clip on the jet needle and to exchange the main jet for one a size smaller. In particularly cold weather, the increased density of the air may necessitate a lower clip position on the jet needle and a size larger main jet.

Since the carburetor regulates and mixes fuel and air going to the engine, there are two general types of carburetor trouble: too rich a mixture (too much fuel); or too lean a mixture (too little fuel). Such trouble can be caused by dirt, wear, maladjustment, or improper fuel level in the float chamber. A dirty or damaged air cleaner can also alter the fuel-to-air ratio.

Table 9 Mixture Trouble Symptoms

Mixture too rich	Mixture too lean
Engine is sluggish	Engine overheats
Smoky exhaust	Runs better with choke lever pulled up
Runs worse when warm	Spark plug burned white
Spark plug fouled black	Running is unstable
Runs better without air cleaner	Loss of power

The following explanation of the functioning and maintenance of the carburetors covers the four main systems for fuel regulation and supply.

Table 10 Carburetor Systems

System	FUNCTION
Starter System	Supplies the necessary rich mixture for starting a cold engine.
Pilot System	Supplies fuel at idling and low speeds.
Main System	Supplies fuel at medium and high speeds.
Float System	Maintains the fuel at a constant level in the float chamber.

CAUTION

1. **Remove the diaphragm before cleaning the carburetor with compressed air, or it will be damaged.**
2. **The carburetor body has plastic parts that cannot be removed. DO NOT use a strong carburetor cleaning solution which could attack these parts; instead, use a mild cleaning solution safe for plastic parts.**
3. **Do not use wire for cleaning as this could damage the jets.**

Starter System

Fig. 396 shows the starter system, which includes the starter jet ⑥, starter pipe ⑤, starter plunger ③, starter air passage ①, plunger chamber ④, and mixture passage ②.

Starter System (396)

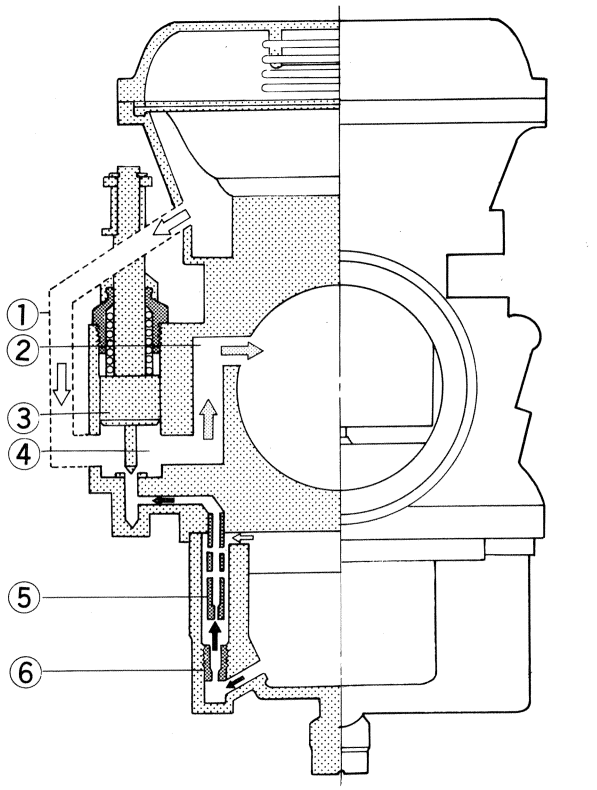

1. Air Passage
2. Mixture Passage
3. Starter Plunger
4. Plunger Chamber
5. Starter Pipe
6. Starter Jet

The starter system provides the exceptionally rich fuel/air ratio that is necessary to enable easy starting when the engine is cold. When starting the engine, the throttle is left closed, and the starter plunger is pulled fully open by pulling up the choke lever. Since the butterfly valve is closed, a high intake vacuum (suction or low pressure) is developed at the engine side of the

Table 11 Carburetor Specifications

Type	Main Jet	Main Air Jet	Needle Jet Badge #	Jet Needle	Pilot Jet	Pilot Screw	Starter Jet	Fuel level (from bore center)
BS38	125	1.0	Z-4	Z-4 N106-052	45	1½ ± ½ turns out	110	31 ± 1 mm

carburetor bore. The starter plunger, when raised, opens up the starter fuel passage and an air passage so that they connect to the engine side of the carburetor bore. As the engine is cranked over, it draws in air through this air passage and fuel from the float chamber through the starter fuel passage. Fuel metered by the starter jet mixes with a small amount of air drawn in through air bleed holes in the starter pipe as it rises in the starter fuel passage. This small amount of air prepares the fuel for better atomization once it reaches the plunger chamber (the area just below the raised plunger) where the fuel mixes with the air drawn in through the air passage. Through the mixture passage, this mixture is then drawn into the carburetor bore where it, together with a small amount of mixture supplied by the pilot system, is drawn into the engine.

In order for the starter system to work properly, the throttle must be kept closed so that sufficient vacuum can be built up at the starter outlet. Also, the choke lever must be pulled up fully so that the starter plunger will fully open the air passage and starter fuel passage to the carburetor bore. Clogged starter pipe air bleed holes will cause insufficient atomization, thus impairing starter system efficiency. Fuel mixture trouble results if the plunger does not seat properly in its rest position after the choke lever is returned. This may be caused by dirt, gum, a defective spring, deformed plunger chamber bore, or damaged plunger seat rubber.

Starter System Fuel and Air Supply (397)

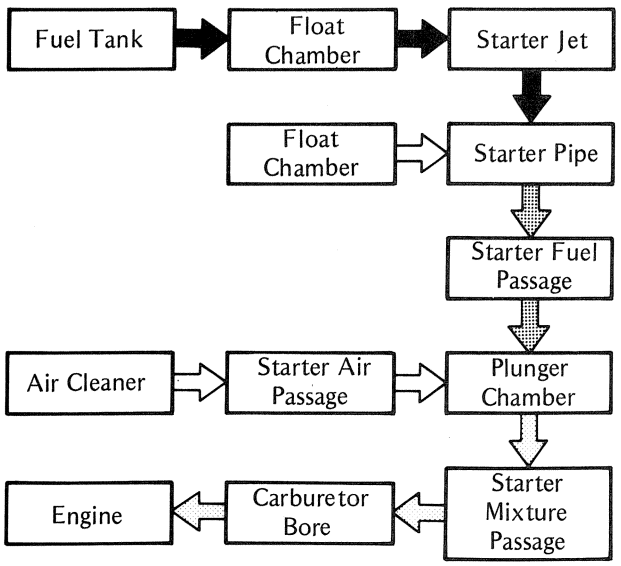

Cleaning (See caution Pg. 114)

Remove the diaphragm and float bowl. Blow the starter pipe, starter air passage, mixture passage, and starter jet clean with compressed air.

Remove the starter plunger, and clean it with a high flash-point solvent.

Pilot System

Fig. 398 shows the pilot system, which includes the pilot jet ⑧, pilot air jet ①, pilot passage pipe ⑦, pilot bypass ⑤, pilot screw ③, and pilot screw passage ④.

Pilot System (398)

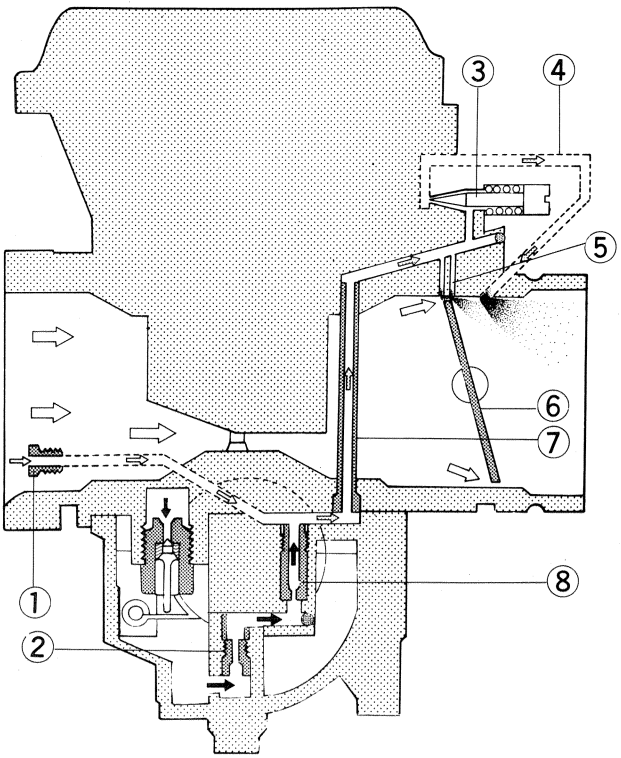

1. Pilot Air Jet
2. Main Jet
3. Pilot Screw
4. Pilot Screw Passage
5. Pilot Bypass
6. Butterfly Valve
7. Pilot Passage Pipe
8. Pilot Jet

Pilot System Fuel and Air Supply (399)

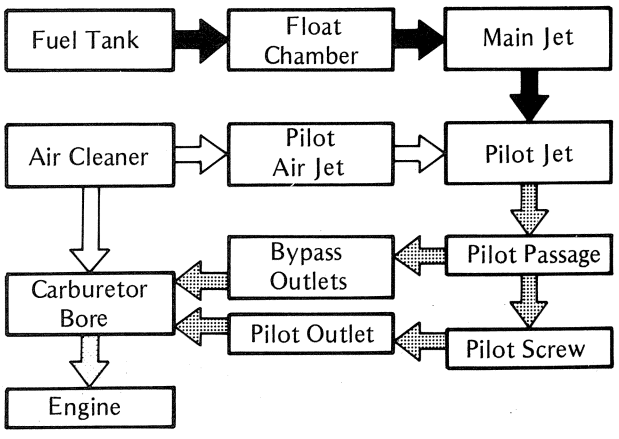

The pilot system determines the operation of the carburetor from 0 to ¼ throttle opening. At small throttle openings, almost no fuel is drawn through the main system due to insufficient air flow. Instead, the fuel is drawn through the main and pilot jets as a result of the low pressure (suction) brought about by the demand for air by the engine, and the limited but relatively fast flow of air past the pilot outlets. The almost closed position of the butterfly valve restricts the carburetor bore air flow, preventing it from relieving the low pressure created by the engine around the pilot outlets. The venturi effect (the narrower the air passage, the faster the flow of air) at the engine side of the butterfly valve further reduces the low pressure.

The supply of the fuel and air in the pilot system is shown in Fig. 399. At idling, fuel passes through the main jet and is metered by the pilot jet. It mixes with air metered by the pilot air jet, and flows through the pilot passage. The pilot screw controls flow to the pilot outlet, where the mixture enters the carburetor bore, and is drawn into the engine. As the butterfly valve begins to open, its position extends the low pressure area to the pilot bypass outlets, allowing fuel to "bypass" part of the pilot passage and go directly to the carburetor bore. In this way, the supply of fuel increases sufficiently with engine need.

Fig. 400 shows throttle opening versus fuel flow for the main and pilot systems. If there is trouble in the pilot system, starting and low speed running are affected. The transition from pilot to main system is not smooth as the throttle is opened, causing a drop in engine efficiency. Pilot system trouble might be due to maladjustment; a dirty or loose pilot jet or pilot air jet; or clogging of the main jet, pilot passage, pilot outlet, or pilot bypass outlets.

Flow Characteristic (400)

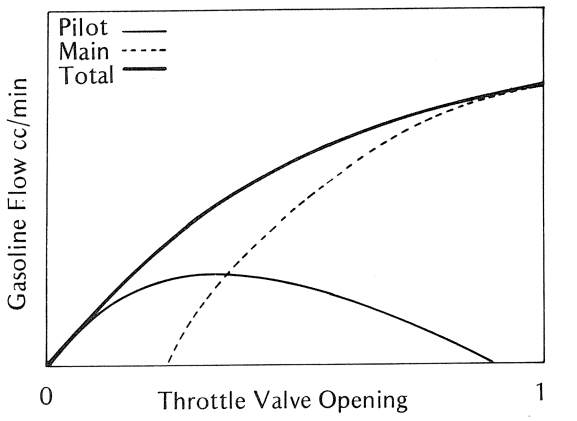

Cleaning and replacement (See cautions Pg. 114)

Remove the diaphragm and pilot screw. Wash the main jet, pilot jet, and pilot air jet with a high flash-point solvent; and blow them clean with compressed air. Use compressed air to clean the pilot passage and pilot air jet passage.

Check that the pilot screw tapered portion is not worn or otherwise deformed. If it is, replace the screw.

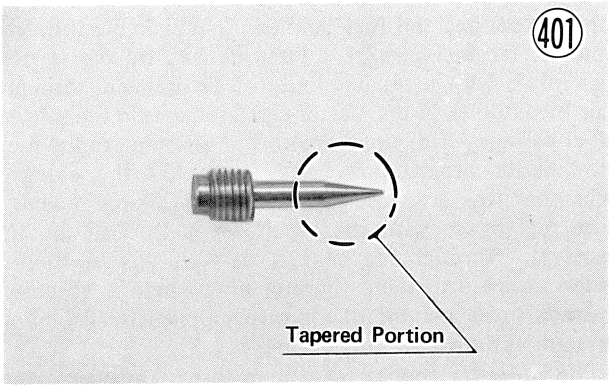

Main System

Fig. 402 shows the main system, which consists of the main jet ⑥, needle jet ⑨, jet needle ④, vacuum piston ②, main air jet ⑤, diaphragm ①, spring ⑦, and air vent ③. Fig. 403 shows the supply of fuel and air in the main system.

From about ¼ throttle opening, the air flow past the jet needle outlet is sufficient to cause fuel to be drawn through the main system. The fuel passes through the main jet, and then part of it goes through the pilot jet as in the pilot system. The rest of the fuel passes straight up through the needle jet and into the carburetor bore, where it is atomized by the air flow to the engine.

The needle jet has holes to admit the air metered by the main air jet. This air mixes with the fuel in the needle jet to prepare the fuel for better atomization in the carburetor bore.

The lower part of the jet needle is tapered and extends down into the needle jet. It is fixed to the vacuum piston, and thus rises up in the needle jet as the vacuum piston rises. From the time the vacuum piston starts rising, about ¼ throttle, until it reaches most of the way up in the carburetor bore, the fuel is metered primarily by the jet needle taper. As the jet needle rises, the needle-to-jet clearance increases, thereby increasing the amount of fuel that can pass up through the jet.

The vacuum piston is attached to the diaphragm and rises only between ¼ and ¾ throttle. Through the hole in the bottom of the piston, the air pressure in the bottom of the piston, the air pressure in the chamber above the diaphragm is reduced by engine intake vacuum. The air vent maintains atmospheric pressure in the chamber under the diaphragm. As engine speed increases, air pressure in the upper chamber decreases. The difference between this pressure and atmospheric pressure in the lower chamber becomes greater. The force of the spring and the weight of the piston are overcome, and the piston rises to an extent corresponding to this pressure difference. The diaphragm is made of rubber and absorbs the vibration caused by engine intake pulsing to prevent the vacuum piston from wearing.

Main System (402)

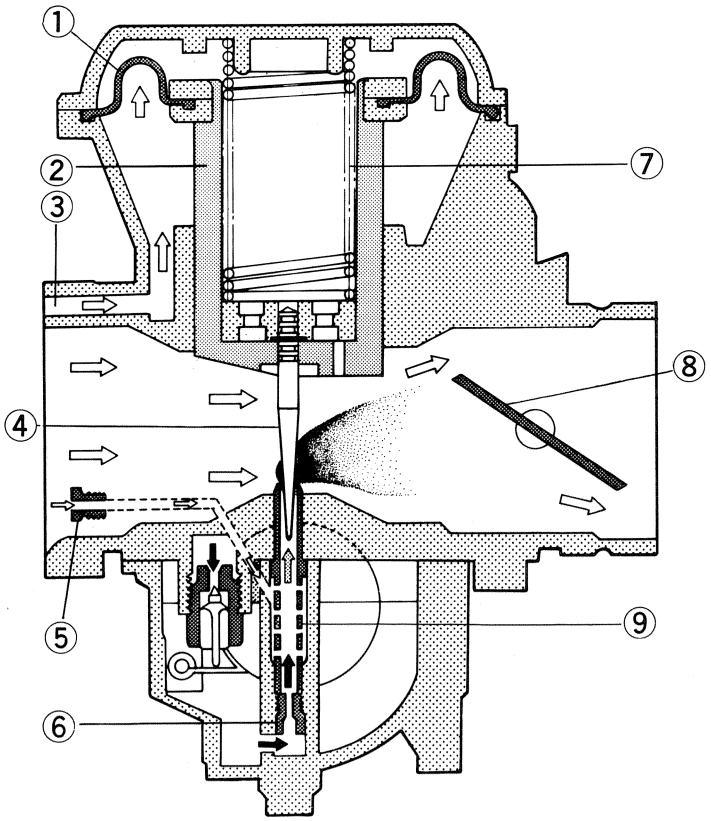

1. Diaphragm
2. Vacuum Piston
3. Air Vent
4. Jet Needle
5. Main Air Jet
6. Main Jet
7. Spring
8. Butterfly Valve
9. Needle Jet

Vacuum Piston Movement (404)

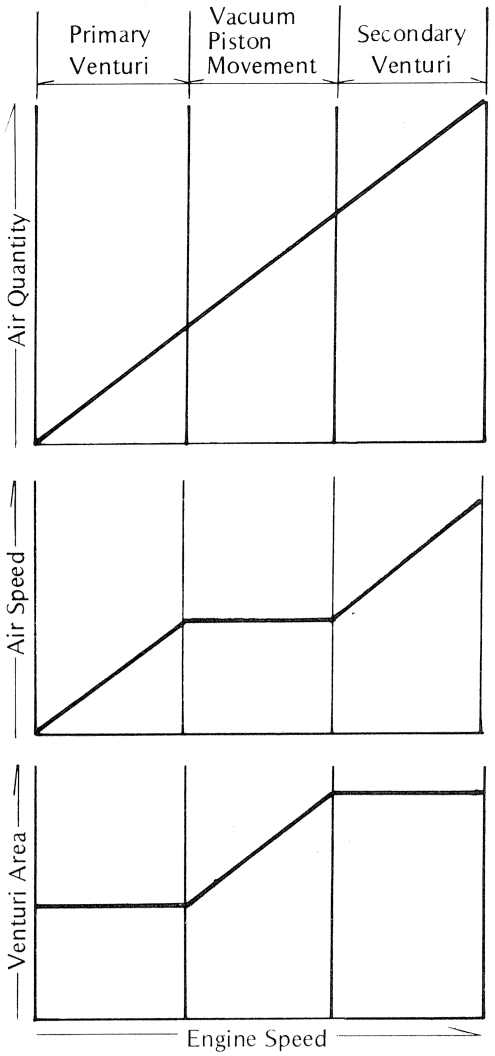

Main System Fuel and Air Supply (403)

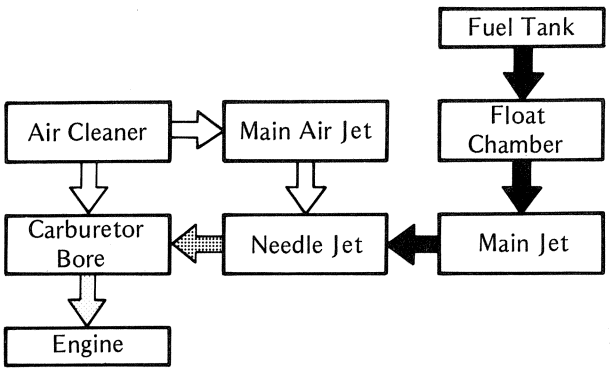

As shown in Fig. 404 the quantity of air drawn in by engine intake is in direct proportion to engine rpm, and the speed of the air flow is almost constant while the vacuum piston rises from ¼ to ¾ throttle. In a conventional slide-type carburetor, the size of the air passage above the needle jet changes with throttle movement rather than with engine intake (demand).

The venturi effect creates a momentary drop in air flow speed when the throttle is opened suddenly. This often causes a slight stall in acceleration. However, the vacuum piston-butterfly valve arrangement controls both the air and fuel supplies during sudden throttle movements for smooth and immediate engine response.

At ¾ throttle the vacuum piston reaches its highest position, forming the "secondary venturi" to permit maximum engine output. At near full throttle openings, the cross-sectional area of the needle-to-jet clearance becomes greater than the main jet. At these openings, the fuel drawn up into the carburetor bore is limited by the size of the main jet rather than the needle-to-jet clearance.

Trouble in the main system is usually indicated by poor running, or lack of power at high speeds. A dirty or clogged main jet will cause the mixture to become too lean. An overly rich mixture could be caused by clogging of the main air jet, its air passage, or the air holes in the needle jet; by needle jet or needle wear (increasing clearance); by a loose main jet; or by a loose needle jet.

Cleaning and adjustment (See caution Pg. 114)

Disassemble the carburetor and wash the main jet, needle jet, jet needle, air jet, and air passage with a high flash-point solvent, blowing them clean with compressed air. If necessary, use a bath of automotive-type carburetor cleaner.

A worn needle jet or jet needle should be replaced, although a certain amount of adjustment can be made by lowering the position of the needle. There are five grooves at the top of the needle. Changing the position of the clip to a groove closer to the top lowers the needle, which makes the mixture leaner at a given position of the vacuum piston.

NOTE: The last number of the jet needle number ("4" of 4JN19-4) is not stamped on the needle, but is the number of the standard groove in which the clip is set. The groove numbers are counted from the top of the needle, 1 being the topmost groove, and 5 being the lowest groove.

Jet Needle (405)

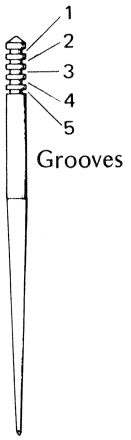

If the engine still exhibits symptoms of overly rich or lean carburetion after all maintenance and adjustments are correctly performed, the main jet can be replaced with a smaller or larger one. A smaller numbered jet gives a leaner mixture and a larger numbered jet a richer mixture. Many jets are available, but it is recommended that any change be limited to one jet size (2.5) difference from the standard jet.

Visually inspect the diaphragm. If there is any tear or other damage, the diaphragm should be repalced. If there is any doubt about the diaphragm, check the vacuum piston operation according to the Disassembly Section (Pg. 33).

Float System

Fig. 406 shows the float system, which consists of the float④, float valve needle②, float valve seat①, and overflow pipe⑤.

The float system serves to keep a relatively constant level of fuel in the carburetor float chamber at all times so that the fuel supply to the engine will be stable.

Float System (406)

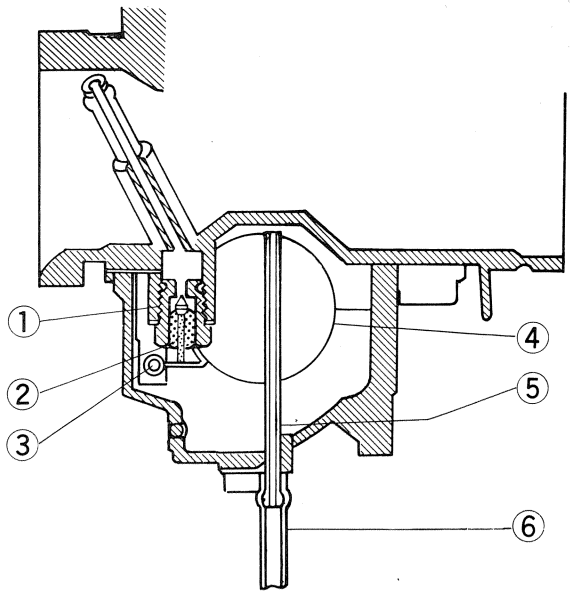

1. Float Valve Seat
2. Float Valve Needle
3. Float Pin
4. Float
5. Overflow Pipe
6. Overflow Tube

If the fuel level in the float chamber is set too low, it will be more difficult for fuel to be drawn up into the carburetor bore, resulting in too lean a mixture. If the level is set too high, the fuel can be drawn up too easily, resulting in too rich a mixture.

The fuel level is defined as the vertical distance from the center of the carburetor bore to the surface of the fuel in the float chamber. The fuel level is maintained at a constant value by the action of the float valve, which opens and closes according to the fuel level. As fuel flows through the float valve into the chamber, the fuel level rises. The float, rising with the fuel level, pushes up on the needle. When the fuel reaches a certain level, the needle is pushed completely into the valve seat, which closes the valve so that no more fuel may enter the chamber. As the fuel is drawn up out of the float chamber, the fuel level drops, lowering the float. The needle no longer blocks the float valve, and fuel once again flows through the float valve into the chamber.

Fuel level measurement and adjustment

Secure the motorcycle in a true vertical position. Turn the fuel tap off, and remove the drain screw from the bottom of the float bowl. Install the fuel level gauge (special tool). Hold the plastic tube against the side of the carburetor so that the "0" line is even with the bottom edge of the carburetor body. Turn on the fuel tap. Read the fuel level in the plastic tube.

NOTE: Measure the service fuel level at the center of the carburetor.

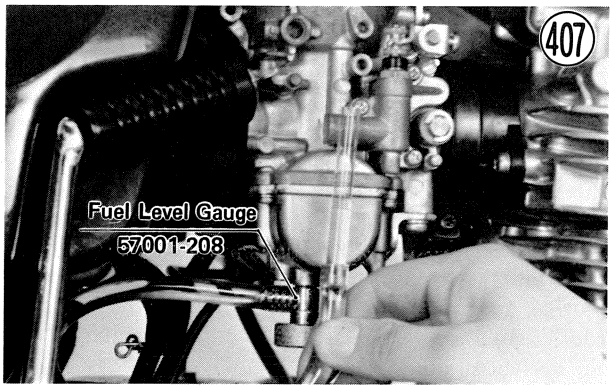

Fuel Level Measurement

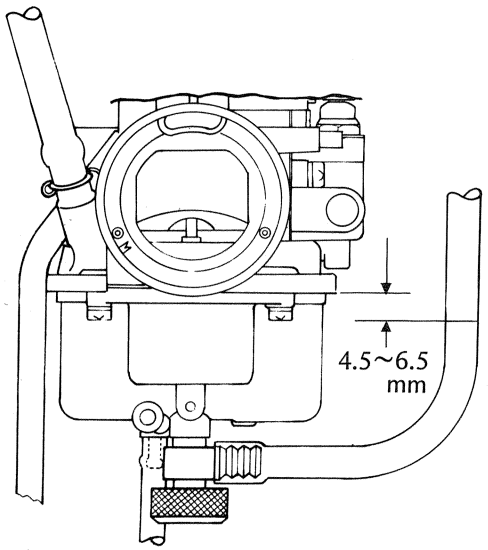

Table 12 Service Fuel Level

Standard
4.5~6.5 mm below from the bottom edge of the carburetor body to the fuel level

If the fuel level is incorrect, remove the carburetor (Pg. 33), and then remove the float bowl and float. Bend the tang on the float a very slight amount to change the fuel level. Bending it down closes the valve sooner and lowers the fuel level; bending it up raises the level.

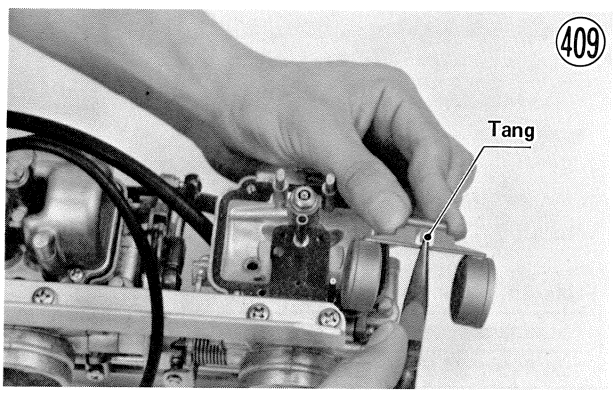

After adjustment, measure the fuel level again, and readjust if necessary.

Cleaning and replacement (See caution Pg. 114)

If dirt gets between the needle and seat, the float valve will not close and fuel will overflow. Overflow can also result if the needle and seat become worn. If the needle sticks closed, no fuel will flow into the carburetor.

Remove the carburetor, and take off the float bowl and float. Wash the bowl and float parts in a high flash-point solvent. Use carburetor cleaner if necessary on the float bowl and metal parts. Blow out the fuel overflow pipe with compressed air.

Examine the float, and replace if damaged. If the needle is worn as shown in the diagram, replace the needle and seat as a set.

Vlave Needle

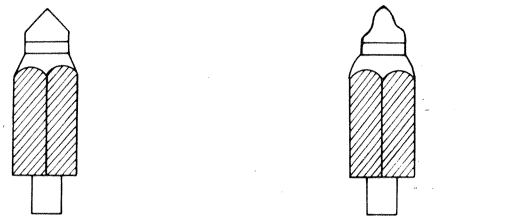

CAMSHAFTS

Since this engine is the DOHC (Double Over Head Camshaft) type, there are two camshafts mounted in the top of the cylinder head. One is the inlet camshaft, and is manufactured with two cam lobes, one to open the inlet valve for each cylinder. The other is the exhaust camshaft, and has two cam lobes to open the exhaust valves. There is a sprocket at the center of the crankshaft and at the center of each camshaft. A chain placed over these sprockets enables the crankshaft to turn both camshafts so that the valves will be opened and closed at the proper times during each rotation of the engine.

Each sprocket has marks so that valve timing (the time that each valve is opened) can be reset correctly any time the camshafts are removed for inspection or repairs (See Pg. 40).

However, since the time, amount, and duration that each valve is opened (valve timing) changes with cam wear, journal wear, and camshaft runout (bend); the camshafts should be inspected periodically and whenever timing trouble is suspected. If the valves do not open at the right times or if they do not open the correct amount or duration, there will be a decrease in combustion efficiency, causing a loss of engine power and leading to serious engine trouble.

Valve Timing

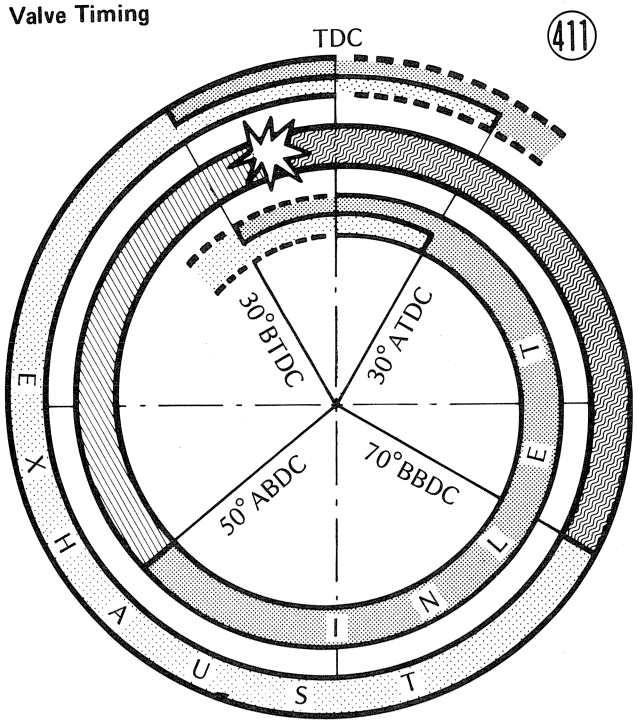

Cam wear

Remove the camshafts, and measure the height of each cam with a micrometer. If the cams are worn down past the service limit, replace the camshafts.

Cam Height Measurement

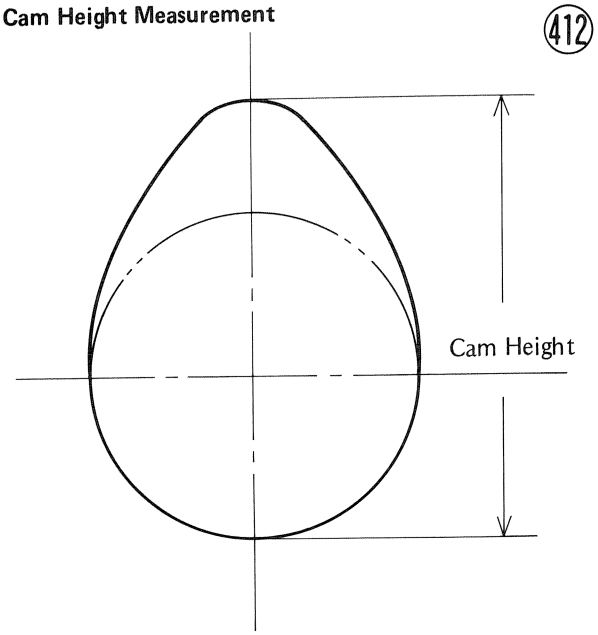

Table 13 Cam Height

	Standard	Service Limit
Inlet	41.21 ~ 41.39 mm	41.15 mm
Exhaust	42.26 ~ 42.44 mm	42.20 mm

Journal, bearing wear

The journal wear is measured using plastigauge (press gauge), which is inserted into the clearance to be measured. The plastigauge indicates the clearance by the amount it is compressed and widened when the parts are assembled.

Remove the camshafts, and wipe each journal, camshaft cap, and cylinder head bearing surface clean of dirt and oil. Install the camshafts so that no cam lobe is pushing down a valve. This is to prevent the camshafts from turning during clearance measurement. Cut strips of plastigauge to journal width. Place a strip on each journal parallel to the camshaft and so that the plastigauge will be compressed between the journal and the camshaft cap. Install the camshaft caps, tightening the bolts in the correct sequence with the correct amount of torque (Pg. 39).

Remove the camshaft caps, and measure the plastigauge width to determine the clearance between each journal and the cylinder head cover. If a clearance exceeds the service limit, measure the diameter of the camshaft journal and the bearing inside diameter.

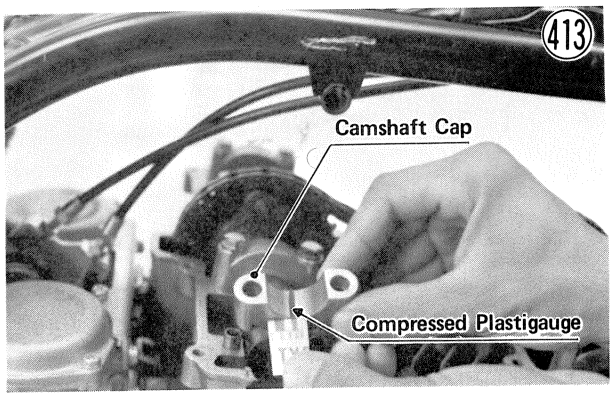

Table 14 Camshaft Journal/Camshaft Cap Clearance

Standard	Service Limit
0.030 ~ 0.072 mm	0.16 mm

Measure the diameter of each camshaft journal with a micrometer. If a diameter is less than the service limit, replace the camshaft.

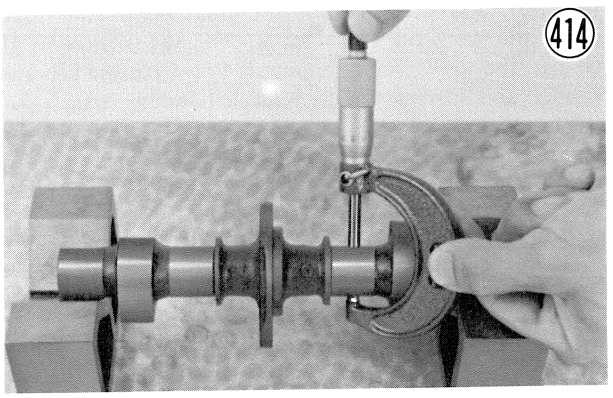

Table 15 Camshaft Journal Diameter

Standard	Service Limit
24.949 ~ 24.970 mm	24.93 mm

Remove the camshafts, and tighten the camshaft caps with 1.1 ~ 1.3 kg-m (95 ~ 113 in-lbs) of torque. Measure the vertical inside diameter of each bearing with a cylinder gauge. If it exceeds the service limit, replace the cylinder head and camshaft caps as a set since the camshaft caps are machined together with the cylinder head.

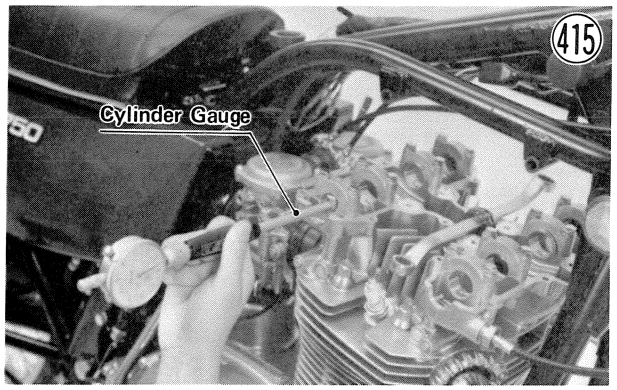

Table 16 Camshaft Bearing Inside Diameter

Standard	Service Limit
25.000~25.021 mm	25.06 mm

Camshaft runout

Remove the camshafts, and set each shaft in **V** blocks at the outside journals as shown in the figure. Measure the runout with a dial gauge set against the inside journal. If the runout exceeds the service limit, replace the camshaft.

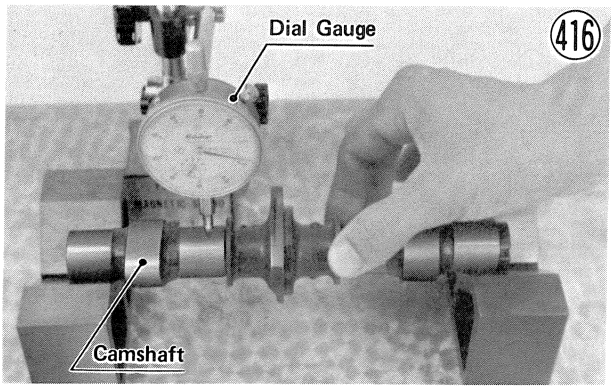

Table 17 Camshaft Runout

Standard	Service Limit
under 0.02 mm	0.1 mm

CAMSHAFT CHAIN, GUIDES, TENSIONER

The camshaft chain, which is driven by the crankshaft sprocket, drives the two camshafts at one-half crankshaft speed. For maximum durability, it is an endless-type chain with no master link.

Camshaft chain, sprocket, and chain guide wear cause noise, accelerate wear, and could possibly lead to serious damage to the engine. If the chain tension can no longer be adjusted by the chain tensioner, either the camshaft chain or the chain guides must be replaced.

Camshaft chain wear

Remove the camshaft chain, hold the chain taut with a force of about 5 kg in some manner such as the one shown in Fig. 417, and measure a 20-link length. Since the chain may wear unevenly, take measurements at several places. If any measurement exceeds the service limit, replace the chain.

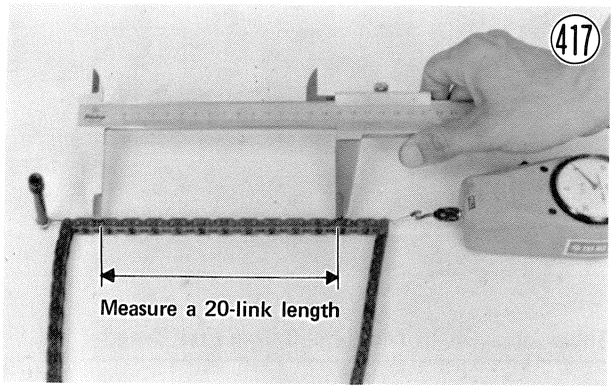

Table 18 Camshaft Chain Length

Standard	Service Limit
160.0~160.3 mm	162.4 mm

Chain guide wear

Remove the chain guides and sprocket, and inspect them visually. Replace a guide if the rubber or any other portion is damaged.

Measure the depth of the grooves where the chain links run. Replace a guide if the wear exceeds the service limit.

Chain Guide Rubber Wear

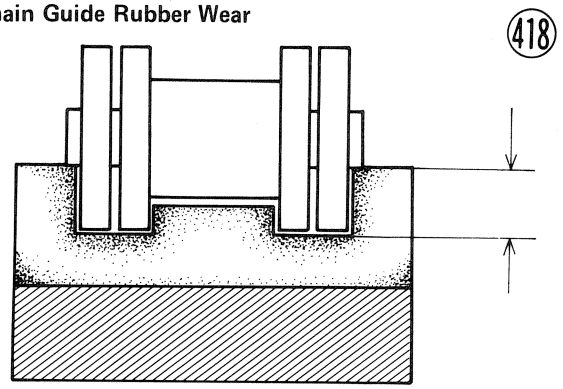

Table 19 Camshaft Chain Guide Wear

	Service Limit
Upper	2 mm
Front Upper	2 mm
Front Lower	2 mm
Rear	4 mm

Chain tensioner wear

Remove the camshaft chain tensioner. Visually inspect the push rod, and check that it moves smoothly in the guide, with the springs removed. If there is any damage or abnormal operation, replace the tensioner with a new one.

Measure the spring free length. Replace the spring if the free length exceeds the service limit.

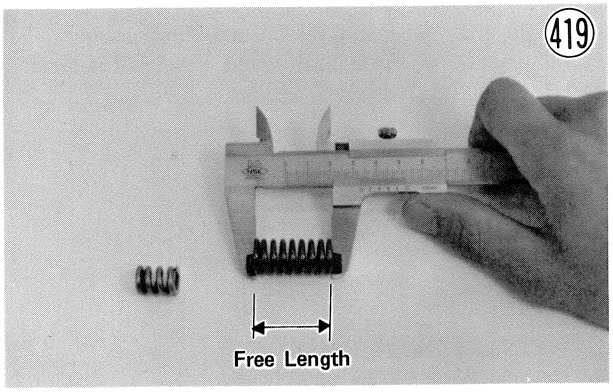

Table 20 Chain Tensioner Spring Free Length

		Standard	Service Limit
'76 and '77 models	Long	34.1~34.5 mm	32.5 mm
	Short	17.06 mm	16.2 mm
'78 and later models	Long	43.7 mm	41.5 mm
	Short	24.32~24.92 mm	23.1 mm

CYLINDER HEAD, VALVES

The valves are mounted in the head; they are pushed open by the cams, and closed by the valve springs.

The valve guides and valve seats are pressed into the cylinder head. The valve seat, which is cut to the angles shown in Fig. 436, prevents compression leakage by fitting snugly against the valve. It also prevents the valve from overheating by allowing efficient heat transfer.

Cylinder Head

The cylinder head is made of aluminum alloy, used for its high heat conductivity, and is finned on the outside to aid dissipation of the heat generated in the combustion chambers. Carbon built up inside the combustion chambers interferes with heat dissipation and increases the compression ratio; which may result in preignition, detonation, and overheating. Trouble can also arise from improper head mounting or mounting torque, which may cause compression leakage.

Cleaning and inspection

Remove the cylinder head (Pg. 40) and valves (Pg. 41). Scrape out any carbon, and wash the head with a high flash-point solvent.

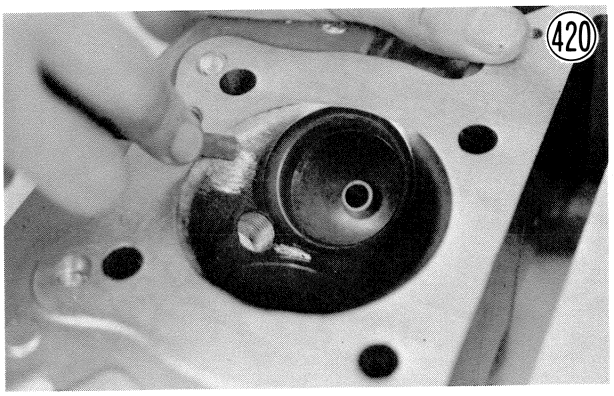

Cylinder head warp

Lay a straightedge across the lower surface of the head at several different points, and measure warp by inserting a thickness gauge between the straightedge and the head. If warp exceeds the service limit, replace the cylinder head.

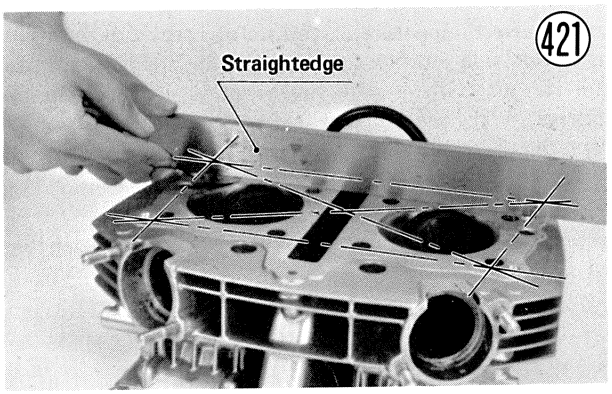

Table 21 Cylinder Head Warp

Service Limit
under 0.05 mm

Combustion chamber volume measurement

The combustion chamber volume should be measured anytime that compression measurement results in compression pressures well below or above the standard.

NOTES:

1. One more person will be needed to help expel air bubbles out of the cylinder head combustion chamber.
2. Prepare a piece of transparent plastic plate which has a flat surface and has two holes about 35 mm apart in its center portion. One is a large hole (about 6 mm in diameter), the other is small hole (about 3 mm in diameter). This plate must be oil resistant, about 120 mm square, and at least 3 mm thick.

Plastic Plate used for Cylinder Head Volume Measurement

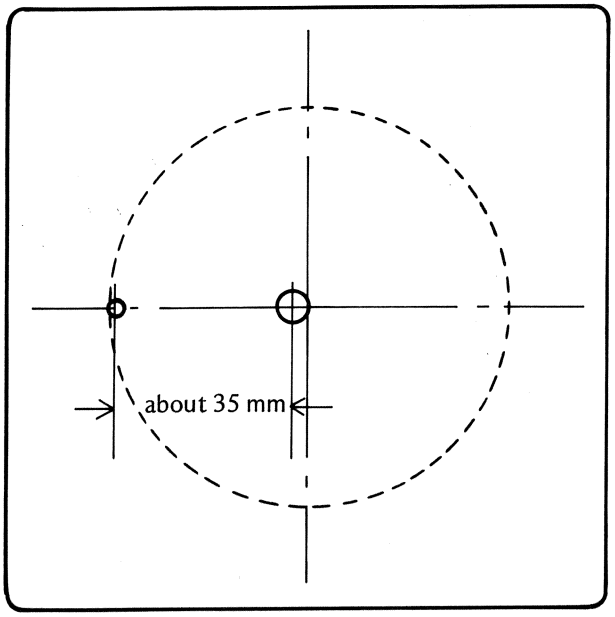

3. Obtain a burette or syringe which is calibrated at one-cc or smaller graduations. Fill it with thin oil.

Prior to the combustion chamber volume measurement, clean off any carbon on the combustion chamber, and remove any gasket flakes on the cylinder head mating surface. The standard spark plug should be installed in the chamber to be measured.

NOTE: The valves must seat well to prevent the oil from leaking out.

Apply a thin coat of grease to the cylinder head mating surface and place the plastic plate over the cylinder head combustion chamber, fitting its small hole with the circumference of the combustion chamber.

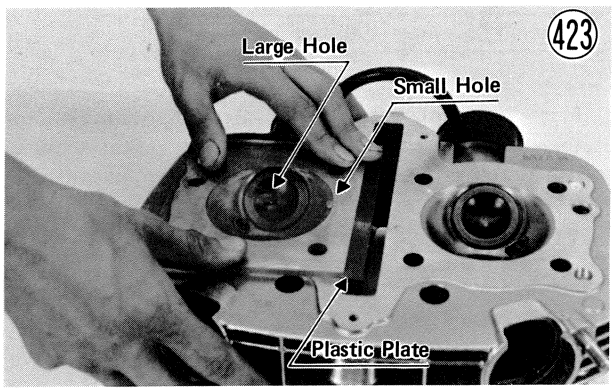

Place the cylinder head on a level surface. Through the large hole, fill the combustion chamber with light oil such as 2-stroke oil or mission oil until the chamber is completely filled but not overly. Tilt the cylinder head slightly so that air bubbles come out through the small hole. The oil should just rise to the bottom edge of the holes in the plate.

The amount of oil used to fill the chamber is the combustion chamber volume.

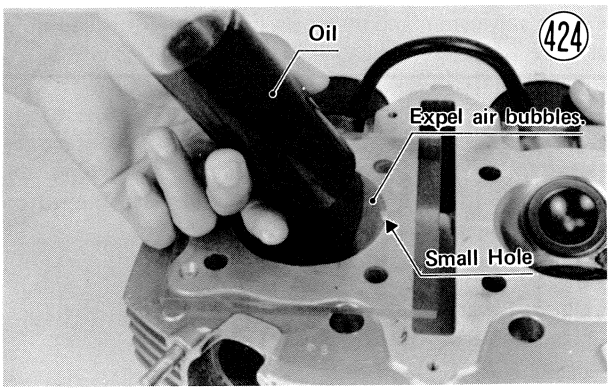

Table 22 Combustion Chamber Volume

Standard
52.5 cc

If the combustion chamber volume is too small, it is possible that the cylinder head was modified for higher compression. Make sure that all carbon deposits have been cleaned out of the chamber.

If the combustion chamber volume is too large, it is possible that the valves and valve seats have been resurfaced so much that the volume is increased. Make sure that the spark plug is the standard type and that it is fully tightened.

Valve, Valve Guide, Valve Seat

Valve face deformation or wear, stem bending or wear, and valve guide wear can cause poor valve seating. Poor seating can also be caused by the valve seat itself, if there is heat damage or carbon build-up. The result of poor valve seating is compression leakage and a loss of engine power.

In addition, valve and valve seat wear causes deeper valve seating and a decrease in valve clearance. Insufficient clearance upsets valve timing and may eventually prevent the valve from seating fully. So that wear never progresses this far, adjust the valve clearance in accordance with the Periodic Maintenance Chart (Pg. 195).

Valve inspection

Visually inspect the valve face, and replace the valve if it shows deformation or uneven wear.

Measure the thickness of the valve head using vernier calipers, and replace the valve together with its valve guide if the thickness is under the service limit.

If the seating surface of the valve or the end of the valve stem is damaged or badly worn, repair the valve with a valve refacer. The angle of the seating surface is 45.0~45.5°.

The valve stem end may be ground to permit additional valve clearance, use a refacing grinder to assure a flat, square surface.

CAUTION **If the valve's Dimension "A" is less than specified, the valve lifter may contact the valve spring retainer during operation, allowing the keepers to loosen. Consequently, the valve may drop into the engine, causing serious damage.**

Valve Shape

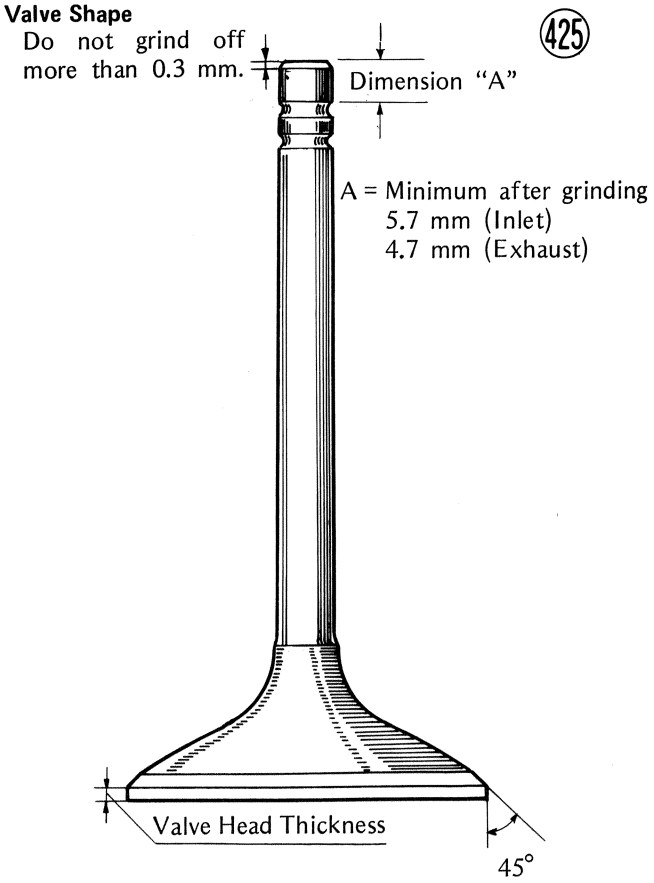

Table 23 Valve Head Thickness

Standard	Service Limit
0.85~1.15 mm	0.5 mm

Valve Stem Grinding

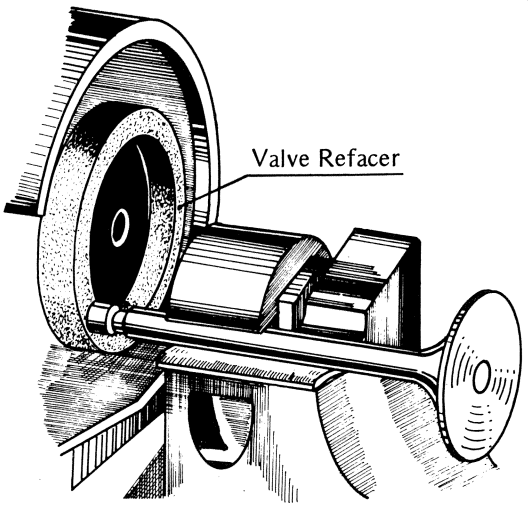

Hold the valve at both ends of the stem straight portion, and set a dial gauge against the center of the stem. One example is shown in Fig. 427.

Valve Stem Bend

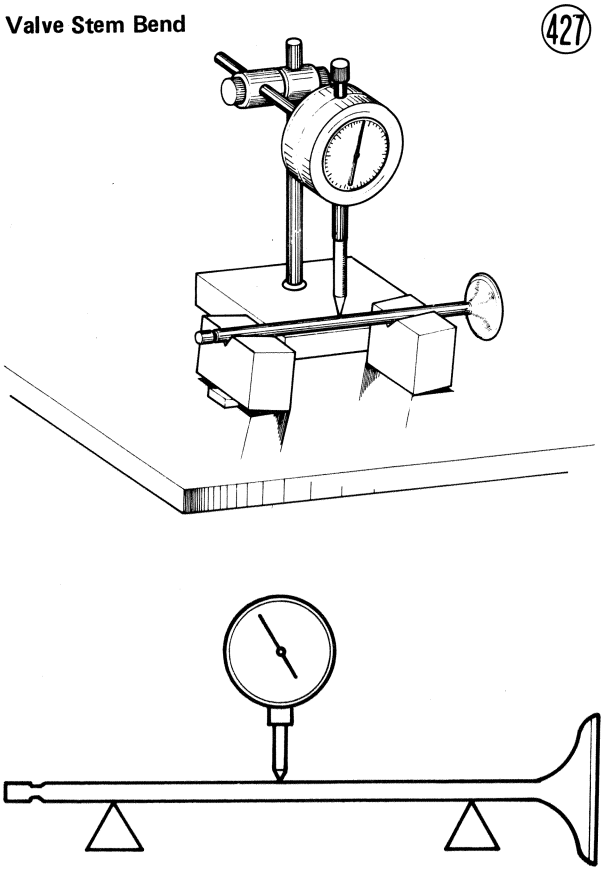

Turning the valve, read a variation in the dial gauge. Replace the valve if it is bent over the service limit.

Table 24 Valve Stem Bend

Standard	Service Limit
under 0.01 mm	0.05 mm

Measure the diameter of the valve stem with a micrometer. Since the stem wears unevenly, take measurements at four places up and down the stem, keeping the micrometer at right angles to the stem.

Replace the valve if the stem is worn to less than the service limit.

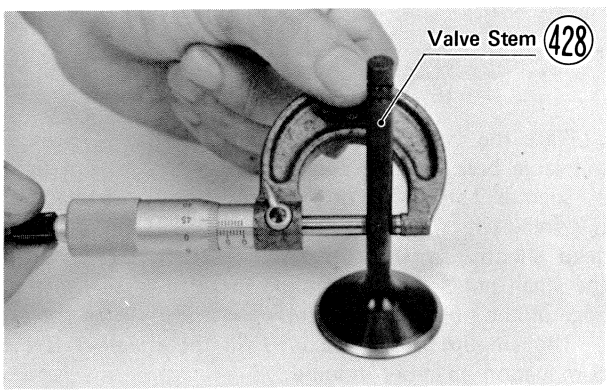

Table 25 Valve Stem Diameter

	Standard	Service Limit
Inlet	7.965~7.980 mm	7.90 mm
Exhaust	7.955~7.970 mm	7.90 mm

Valve guide inspection

Remove the valve, and measure the inside diameter of the valve guide using a small bore gauge and micrometer. Since the guide wears unevenly, measure the diameter at four places up and down the guide. If any measurement exceeds the service limit, replace the guide.

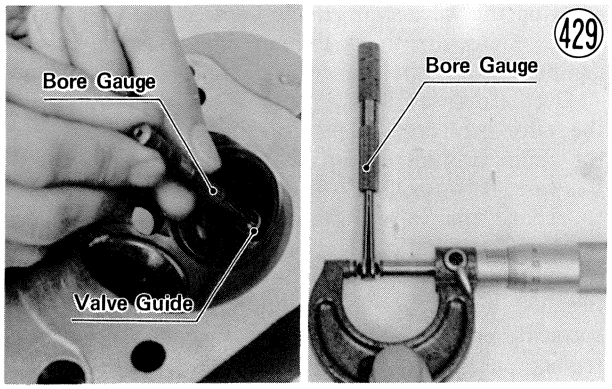

Table 26 Valve Guide Inside Diameter

Standard	Service Limit
8.000~8.015 mm	8.08 mm

If a small bore gauge is not available, inspect the valve guide wear by measuring the valve to valve guide clearance with the wobble method, as indicated below.

Insert a new valve into the guide and set a dial gauge against the stem perpendicular to it as close as possible to the cylinder head mating surface. Move the stem back and forth to measure valve/valve guide clearance.

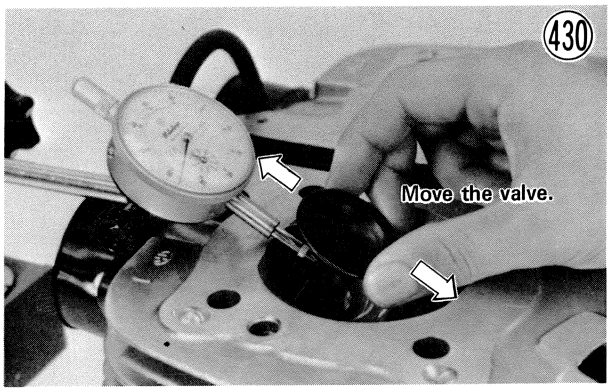

Repeat the measurement in a direction at a right angle to the first.

If the reading exceeds the service limit, replace the guide.

NOTE: The reading is not actual valve/valve guide clearance because the measuring point is above the guide.

Table 27 Valve/Valve Guide Clearance (Wobble Method)

	Standard	Service Limit
Inlet	0.047~0.117 mm	0.23 mm
Exhaust	0.069~0.139 mm	0.23 mm

Valve seat repair

The valve must seat in the valve seat evenly around the circumference over the specified area. If the seat is too wide, the seating pressure per unit of area is reduced, which may result in compression leakage and carbon accumulation on the seating surface. If the seating area is too narrow, heat transfer from the valve is reduced and the valve will overheat and warp. Uneven seating or seat damage will cause compression leakage.

Valve Seating Width

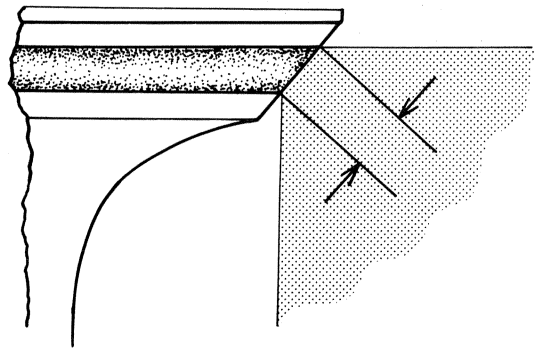

Table 28 Valve Seating Width

Standard
0.7~1.0 mm

To determine whether or not the valve seat requires repair, first remove the valve, apply machinist's dye to the valve seat, and then use a lapper to tap the valve lightly into place. Remove the valve, and note where the dye adheres to the valve seating surface. The valve seating surface should be in the middle of the valve face (Fig. 431). The distribution of the dye on the seating surface gives an indication of seat condition (Fig. 432).

NOTE: The valve and valve guide must be in good

Valve/Valve Seat Contact Area

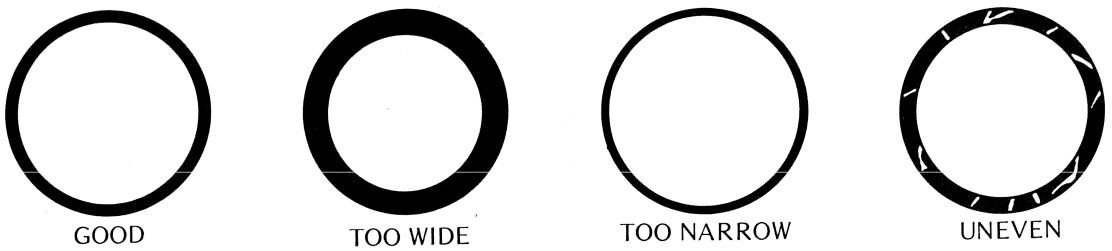

condition before this check will give an accurate indication of valve seat condition.

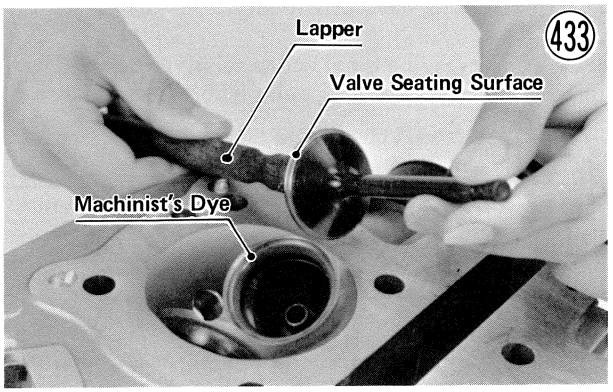

A valve seat which requires repair is cut with a set of valve seat cutters. Four cutters are required for complete repair; one 30° (inlet valve seat only); one 45°; and two 75° cutters, one for the inlet and the other for the exhaust.

First, cut the seating surface of the valve seat with the 45° cutter. Cut only the amount necessary to make a good surface; overcutting will reduce the valve clearance, possibly making it no longer adjustable.

Next, use the 30° cutter (inlet valve seat only) to cut the surface inside the seating surface, and then use the 75° cutter to cut the outermost surface. Cut these two surfaces so that the seating surface will have a specified width.

After cutting, lap the valve to properly match the valve and valve seat surfaces. Start off with coarse lapping compound, and finish with fine compound.

Apply compound to the valve seat, and tap the valve lightly into place while rotating it with a lapper, repeating this until a smooth, matched surface is obtained.

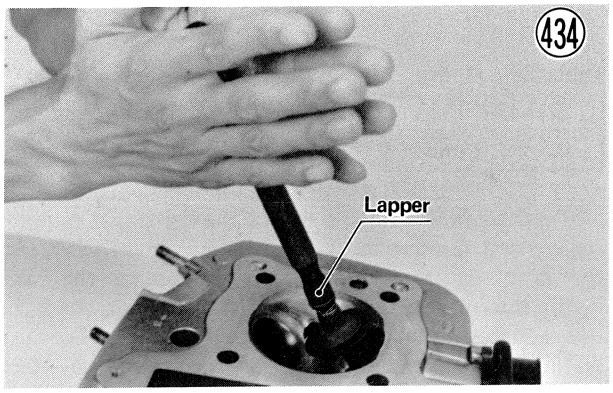

When lapping is completed, check the valve stem height and adjust if necessary.

After grinding the valve or valve seats and before assembling the cylinder head, measure the installed valve height from the bottom of the cylinder head lifter hole to the end of the valve stem with a vernier caliper. Refer to Page 200 for the recommended repair.

Be sure to mark each valve so it will be properly matched to its corresponding valve seat during assembly.

A selection of various thickness valve shims are available for adjusting the valve clearance. There is, however, a limit to the amount of adjustment possible using the shims. Resurfacing of the valve face and valve seat inevitably drops the valve deeper into the valve seat, allowing the valve stem end to come closer to the camshaft. Consequently, a thinner shim must be used to compensate for the reduced valve clearance.

Over a period of long use and repeated resurfacing, the valve may drop so far into the valve seat that even the thinnest shim cannot give adequate clearance. In this case, it is possible to grind the end of the valve stem to reduce the valve installed height and so gain the needed clearance (See Caution in Pg. 124).

If the valve drops so far into the valve seat that the installed height becomes quite large, either by a resurfacing error or heavy wear, it may be necessary to replace the valve and remeasure the installed height. If this is not successful, it will be necessary to replace the cylinder head. Replacement valve seats are not available.

Valve Stem Height

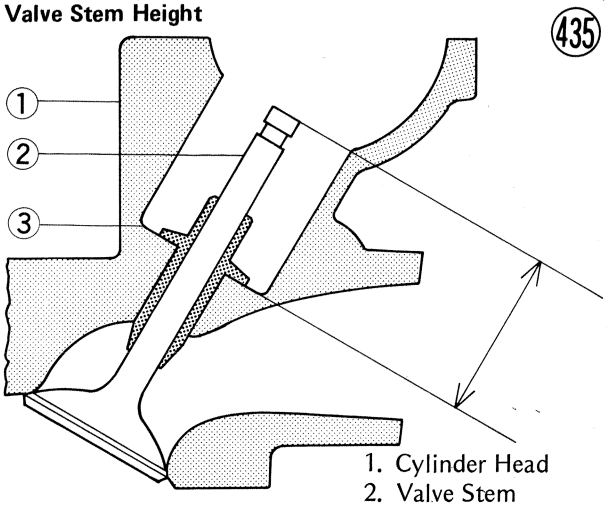

1. Cylinder Head
2. Valve Stem
3. Lifter Hole Bottom

Cutting Angle of Valve Seat

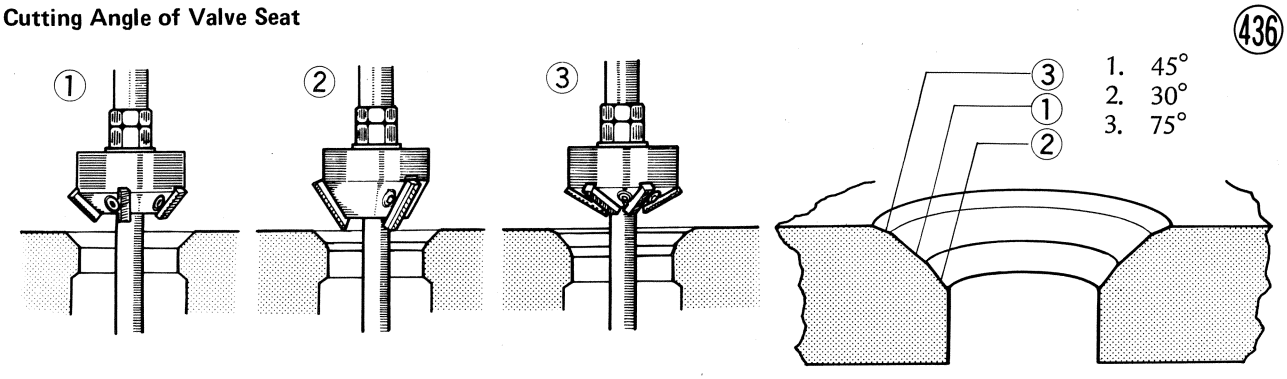

Valve Springs

When the valve is not being pushed open by the cam, valve springs press the valve against the seat to prevent compression leakage. An inner spring is used with each outer spring to prevent spring surge, which may cause valve float at high rpm. If the springs weaken or break, compression leakage and valve noise will result, dropping engine power.

Spring Tension

Remove the springs, and set them one at a time, on a spring tension testing device. Compress the spring, and read the tension at the test length. If the spring tension at the specified length is weaker than the service limit, replace the spring.

Valve Spring Tension Measurement (437)

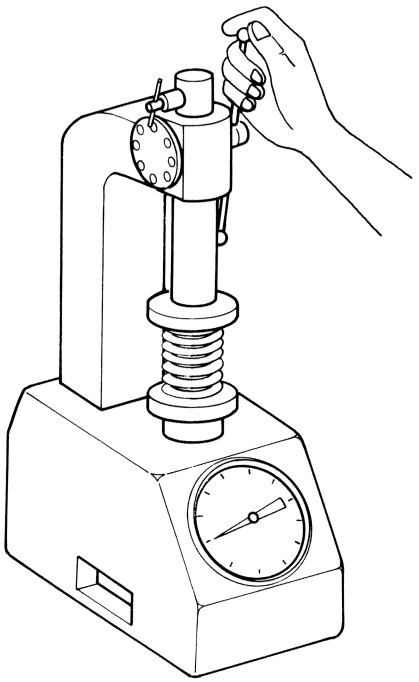

Table 29 Valve Spring Tension

	Length	Standard	Service Limit
Inner	23.15 mm	27.55~30.45 kg	26.44 kg
Outer	26.15 mm	59.85~66.15 kg	57.60 kg

Squareness

Measure the squareness of each spring by standing each end on a surface plate and setting a square against it. Replace any spring for which the distance between the top of the spring and the square is greater than the service limit.

Valve Spring Squareness (438)

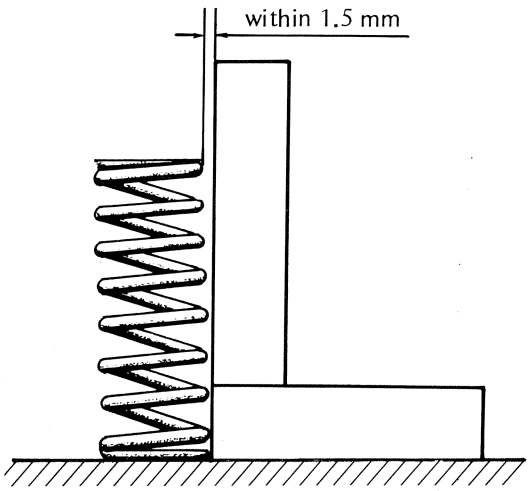

Table 30 Valve Spring Squareness

Standard	Service Limit
under 1.1 mm	1.5 mm

Oil Seals

The oil seal around each valve stem prevents oil from leaking down into the combustion chamber. If an oil seal is damaged or deteriorated, oil consumption will increase, and carbon may build up in the combustion chambers. This may be indicated by white exhaust smoke.

If an oil seal appears damaged or deteriorated or if there is any doubt as to its condition, replace it with a new one.

CYLINDER BLOCK AND PISTONS

NOTE: For 1978 and later models there are no size marks on the piston, cylinder, or piston pin. This means that any piston can be assembled with any cylinder and piston pin. But, when a piston, cylinder, or piston pin on 1976 and 1977 models is replaced with a new one, check that piston to pin clearance and piston to cylinder clearance have the specified values.

The cylinder block is subjected to extremely high temperatures. Since excessive heat can seriously distort the shape of a cylinder or cause piston seizure, the cylinder block is made of aluminum alloy for good heat conduction and the outside is finned to increase the heat-radiating surface for better cooling efficiency. To minimize distortion from heat and to maximize durability, a wear resistant iron sleeve is cold-pressed into each cylinder.

Each piston is made from an aluminum alloy, which expands and distorts slightly from heat during engine operation. So that the piston will become cylindrical after heat expansion, it is designed such that, when cold, it is tapered in towards the head and is elliptical rather than perfectly round. The piston diameter is made so that there is enough clearance between the piston and cylinder to allow for expansion.

Three rings are fitted into grooves near the top of each piston to prevent compression leakage into the crankcase and to stop oil from getting up into the combustion chambers. The top two rings are compression rings, and the bottom ring is an oil ring.

The full floating type of piston pin is used to connect each piston to its connecting rod. The middle part of the piston pin passes through the small end of the connecting rod, and a snap ring is fitted at each end of the piston pin in a groove to prevent the pin from coming out. Since the pin is the full floating type, a small amount of clearance exists between the piston pin and the piston when the engine is at normal operating temperatures.

Proper inspection and maintenance of the cylinder block and the pistons include checking the compression; removing carbon from the piston heads, piston ring grooves, and cylinder head exhaust ports; and checking for wear and proper clearance during top end overhaul. A worn cylinder, worn piston, or worn or stuck piston rings may cause a loss of compression from gas blowby past the rings. Blowby may result in difficult starting, power loss, excessive fuel consumption, contaminated engine oil, and possibly engine destruction. Oil leakage into the combustion chambers causes carbon to build up on top of the pistons; which may result in preignition, overheating, and detonation. A worn piston pin causes piston slap, which may cause accelerated piston and cylinder wear. It is evidenced by a knocking sound in the engine.

Engine problems may be caused not only by carbon deposits and wear or damage to the engine itself; but also by poor quality fuel or oil, improper oil, improper fuel/air mixture, improper supply of oil, or incorrect ignition timing. Whenever knocking, pinging, piston slap, or other abnormal engine noise is heard; the cause should be determined as soon as possible. Neglect of proper maintenance will result in reduced engine power and may lead to accelerated wear, overheating, detonation, piston seizure, and engine destruction.

Compression measurement

A compression test is useful in determining the condition of the engine. Low compression may be due to cylinder wear; worn piston ring grooves; worn, broken, or sticking piston rings; poor valve seating; cylinder head leaks; or damage to the engine such as piston seizure. Too high compression may be due to carbon build-up on the piston heads and cylinder head. Difference in compression between the cylinders may cause poor running.

Before measuring compression, check that the cylinder head is tightened down with the specified torque (Pg. 201) and that the battery is fully charged (Pg. 176), and thoroughly warm up the engine so that engine oil between the pistons and cylinder walls will help seal compression as it does during normal running. While the engine is running, check that there is no gas leakage from around the cylinder head gasket and from the spark plugs.

Stop the engine, remove the spark plugs, and attach the compression gauge (special tool) firmly into one spark plug hole. Using the starter motor, turn the engine over with the throttle fully open until the compression gauge stops rising; the compression is the highest reading obtainable. Repeat the measurement for the other cylinder.

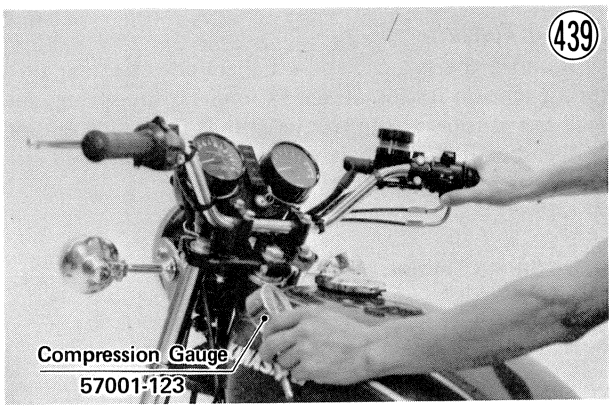

Table 31 Cylinder Compression†

Standard	Service Limit
11.0 kg/cm² (156 psi)	8 kg/cm² (114 psi) and less than 1 kg/cm² (14 psi) difference between the cylinders

† Engine hot, all spark plugs removed, throttle fully opened, cranking the engine with the starter motor.

If cylinder compression is higher than the standard value, check the following:

1. Carbon build-up on the piston head and cylinder head – clean off any carbon on the piston head and cylinder head.
2. Cylinder head gasket, cylinder base gasket – use only the proper gasket for the cylinder head. The use of a gasket of incorrect thickness will change the compression.
3. Valve stem oil seals and piston rings – rapid carbon accumulation in the combustion chambers may be caused by damaged valve stem oil seals and/or damaged piston oil rings. This may be indicated by white exhaust smoke.
4. Cylinder head volume (Pg. 122)

If cylinder compression is lower than the service limit, check the following:

1. Gas leakage around the cylinder head – replace the damaged gasket and check the cylinder head warp (Pg. 122)
2. Condition of the valve seating (Pg. 125)
3. Valve clearance – if a valve requires an unusually thick shim to obtain proper clearance, the valve may be bent, and not seating completely.
4. Piston/cylinder clearance, piston seizure
5. Piston ring, piston ring groove

Cylinder, piston wear

Since there is a difference in cylinder wear in different directions, take a side-to-side and a front-to-back measurement at each of the 3 locations (total of 6 measurements) shown in Fig. 441. If any of the cylinder inside diameter measurements exceeds the service limit, the cylinder will have to be bored to oversize and then honed. However, if the amount of boring necessary would make the inside diameter greater than 79.0 mm, the cylinder block must be replaced.

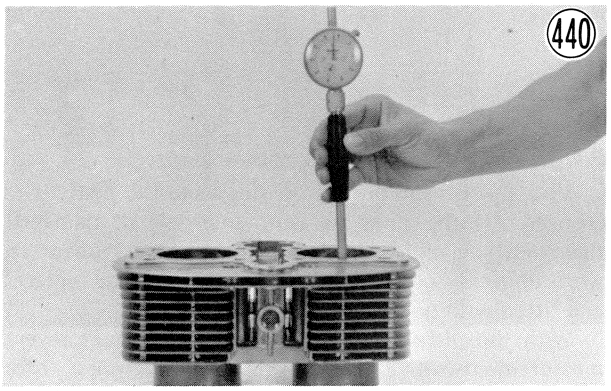

Cylinder Inside Diameter Measurement

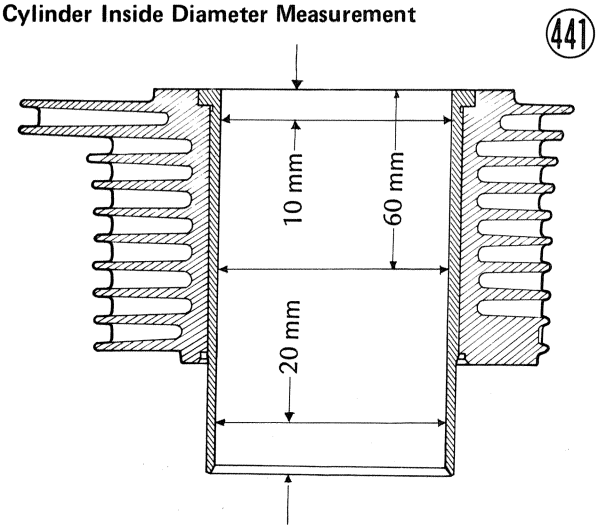

Table 32 Cylinder Inside Diameter

Standard	Service Limit
78.000 ~ 78.019 mm, and less than 0.01 mm difference between any two measurements	78.10 mm, and more than 0.05 mm difference between any two measurements

Measure the outside diameter of each piston 5 mm up from the bottom of the piston at a right angle to the direction of the piston pin. If the measurement is under the service limit, replace the piston.

NOTE: Abnormal wear such as a marked diagonal pattern across the piston skirt may mean a bent connecting rod or crankshaft.

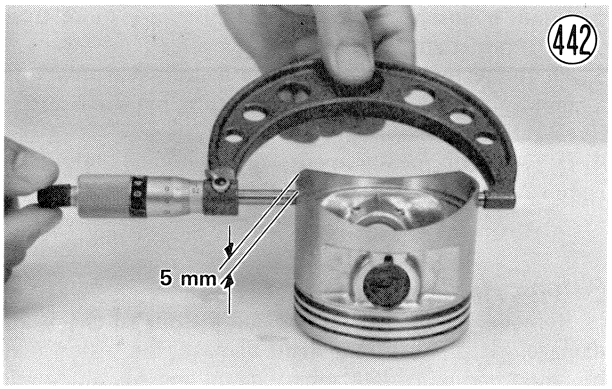

Table 33 Piston Diameter

Standard	Service Limit
77.94~77.96 mm	77.8 mm

Table 32 applies only to a cylinder that has not been bored to oversize, and Table 33 applies only to the standard size piston. In the case of a rebored cylinder and oversize piston, the service limit for the cylinder is the diameter that the cylinder was bored to plus 0.1 mm and the service limit for the piston is the oversize piston original diameter minus 0.15 mm. If the exact figure for the rebored diameter is unknown, it can be roughly determined by measuring the diameter at the base of the cylinder.

NOTE: Whenever the piston or cylinder block has been replaced with a new one, the motorcycle must be broken in the same as with a new machine.

Piston/cylinder clearance

The piston-to-cylinder clearance is measured whenever a piston or the cylinder block is replaced with a new one, or whenever a cylinder is rebored and an oversize piston installed. The standard piston-to-cylinder clearance must be adhered to whenever the cylinder block is replaced or a cylinder rebored. If only a piston is replaced, the clearance may exceed the standard slightly. But it must not be less than the minimum, in order to avoid piston seizure.

The most accurate way to find the piston clearance is by making separate piston and cylinder diameter measurements and then computing the difference between the two values. Measure the piston diameter as just described, and measure the cylinder diameter at the very bottom of the cylinder.

Table 34 Piston/Cylinder Clearance

Standard
0.043~0.070 mm

Boring, honing

When boring and honing a cylinder, note the following:

1. Before boring a cylinder, first measure the exact diameter of the oversize piston, and then, in accordance with the standard clearance given in Table 34, determine the diameter of the rebore.

2. Cylinder inside diameter must not vary more than 0.01 mm at any point.
3. There are two sizes of oversize pistons available: 0.5 mm and 1.0 mm. Oversize pistons require oversize rings.
4. Be wary of measurements taken immediately after boring since the heat affects cylinder diameter.

Piston/cylinder seizure

Remove the cylinder block and pistons to check the damage. If there is only slight damage, the piston may be smoothed with #400 emery cloth, and any aluminum deposits removed from the cylinder with either #400 emery cloth or light honing. However, in most cases, the cylinder will have to be bored to oversize and honed, and an oversize piston installed.

Piston cleaning

Built-up carbon on the piston head reduces the cooling capability of the piston and raises compression, leading to overheating which could possibly even melt the top of the piston. To decarbonize the piston head, remove the piston (Pg. 44), scrape off the carbon, and then lightly polish the piston with fine emery cloth.

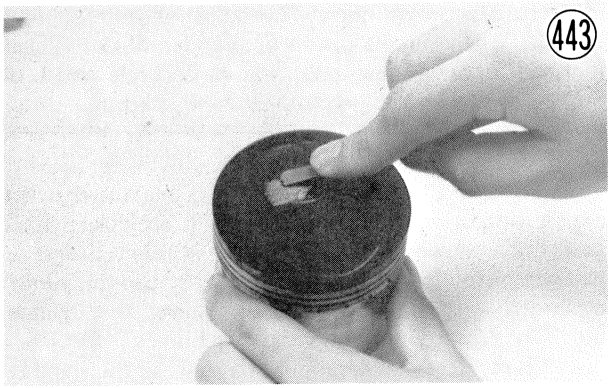

Carbon accumulated in the piston ring grooves can cause the rings to stick. Remove the rings, and clean out any carbon deposits using an end of a broken piston ring or some other suitable tool.



CAUTION

1. **When removing carbon, take ample care not to scratch the side of the piston, or the piston ring grooves.**
2. **Never clean the piston heads with the engine assembled. If the carbon is scraped from the piston heads with the cylinder left in place, carbon particles will unavoidably drop between the pistons and cylinder walls onto the rings and eventually find their way into the crank chamber. Carbon particles, which are very abrasive, drastically shorten the life of the rings, pistons, cylinders, crankshaft bearings, and oil seals.**

Pisotn ring, piston ring groove wear

Visually inspect the piston rings and the piston ring grooves. If the rings are worn unevenly or damaged, they must be replaced. If the piston ring grooves are worn unevenly or damaged, the piston must be replaced and fitted with new rings.

With the piston rings in their grooves, make several measurements with a thickness gauge to determine piston ring/groove clearance. If the clearance exceeds the service limit, measure the thickness of the piston rings and the width of the ring grooves. If the ring has worn down to less than the service limit, replace the ring; if the groove width exceeds the service limit, replace the piston.

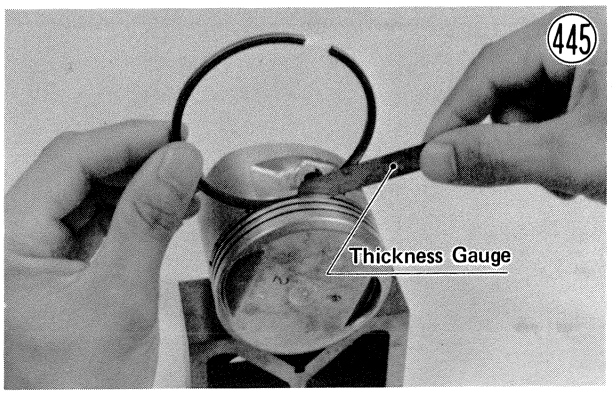

Table 35 Piston Ring/Groove Clearance

Standard	Service Limit
0.01~0.05 mm	0.15 mm

Table 36 Piston Ring Thickness

	Standard	Service Limit
Top and 2nd Rings	1.47~1.49 mm	1.40 mm
Oil Ring	2.77~2.79 mm	2.70 mm

Table 37 Piston Ring Groove Width

	Standard	Service Limit
Top and 2nd Rings	1.50~1.52 mm	1.60 mm
Oil Ring	2.80~2.82 mm	2.90 mm

When new rings are being fitted into a used piston, check for uneven groove wear by inspecting the ring seating. The rings should fit perfectly parallel to the groove surfaces. If not, the piston must be replaced.

Piston ring end gap

Place the piston ring inside the cylinder, using the piston to locate the ring squarely in place. Set it close to the bottom of the cylinder, where cylinder wear is low. Measure the gap between the ends of the ring with a thickness gauge. If the gap is wider than the service limit, the ring is overworn and must be replaced.

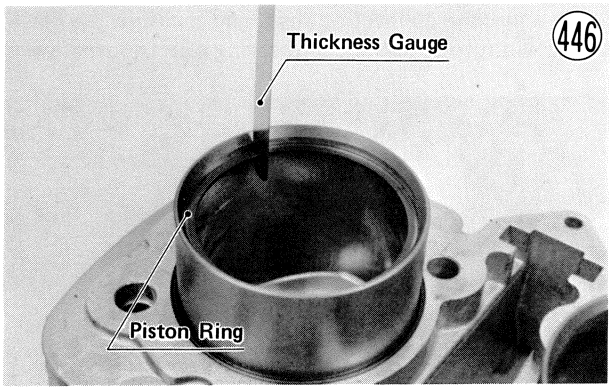

Table 38 Ring End Gap

Standard	Service Limit
0.2~0.4 mm	0.7 mm

**Piston ring tension*

Piston ring tension can be evaluated by measuring the gap between the ends of the ring with the ring free of any restraint. Measure the gap before removing the piston rings from the piston. If the measured gap is less than the service limit, the ring is weak and must be replaced.

Ring Free Gap

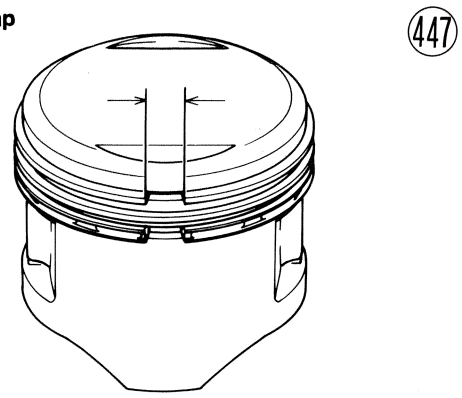

***Table 39 Ring Free Gap**

	Standard	Service Limit
Top Ring	about 11.0 mm	9.9 mm
2nd Ring	about 11.5 mm	10.0 mm
Oil Ring	about 10.0 mm	9.0 mm

Piston, piston pin, connecting rod wear

Measure the diameter of the piston pin with a micrometer, and measure the inside diameter of both piston pin holes in the piston. If the piston pin diameter is less than the service limit at any point, replace the piston pin. If either piston pin hole diameter exceeds the service limit, replace the piston.

Measure the inside diameter of the connecting rod small end. If the diameter exceeds the service limit, replace the connecting rod.

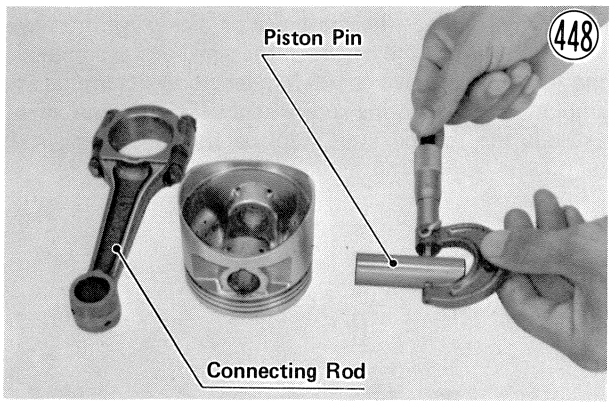

Table 40 Piston Pin, Piston Pin Hole, Small End Diameter

	Standard	Service Limit
Piston Pin	18.995~19.004 mm	18.96 mm
Piston Pin Hole	19.005~19.015 mm	19.08 mm
Small End	19.007~19.023 mm	19.06 mm

NOTE: When a new piston or pin is used, also check that piston-to-pin clearance is 0.005 ~ 0.016 mm, and that pin to small end clearance is within 0.003 ~ 0.025 mm.

CRANKSHAFT AND CONNECTING RODS

The crankshaft changes the reciprocating motion of the pistons into rotating motion, which is transmitted to the rear wheel when the clutch is engaged. The connecting rods connect the pistons to the crankshaft. Crankshaft or connecting rod trouble, such as worn crankshaft journals or a bent connecting rod, will multiply the stress caused by the intermittent force on the pistons. This results in not only rapid crankshaft bearing wear; but also noise, power loss, vibration, and shortened engine life. A defective crankshaft or connecting rod should always be detected at an early stage and then replaced immediately.

The following explanation concerns the most common crankshaft and connecting rod problems, giving the procedure for detecting damage and measuring wear and runout.

Connecting rod bend, twist

Remove the connecting rod big end bearing inserts, and replace the connecting rod big end cap. Select an arbor of the same diameter as the connecting rod big end and of optional length, and insert it through the big end of the connecting rod. Select an arbor of the same diameter as the piston pin and of optional length, and insert it through the small end of the connecting rod.

On a surface plate, set the big-end arbor on **V** blocks so that the connecting rod is perpendicular to the surface plate. Using a height gauge or dial gauge, measure the difference in the height of the small-end arbor above the surface plate over a 100 mm length to determine the amount the connecting rod is bent. If the measurement exceeds the service limit, replace the connecting rod.

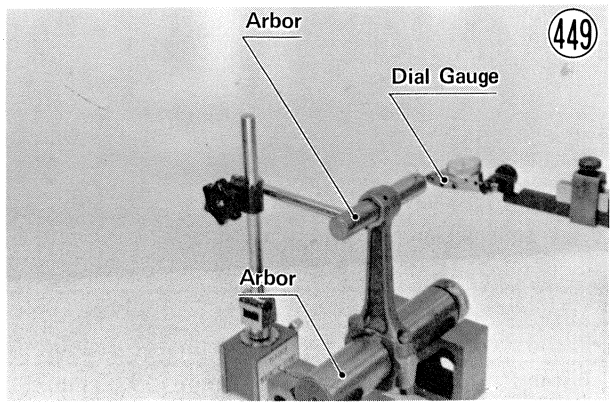

Table 41 Connecting Rod Bend/100 mm

Standard	Service Limit
under 0.10 mm	0.2 mm

Swing the connecting rod 90° to one side and support it parallel to the surface plate as shown in Fig. 450. Measure the difference in the height of the small end arbor above the surface plate over a 100 mm length to determine the amount the connecting rod is twisted.

If the measurement exceeds the service limit, replace the connecting rod.

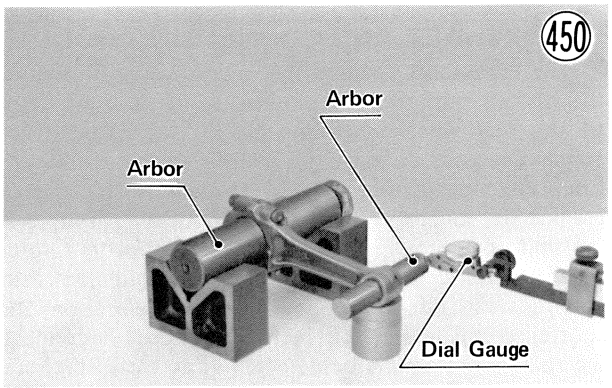

Table 42 Connecting Rod Twist/100 mm

Standard	Service Limit
under 0.15 mm	0.2 mm

Connecting rod bearing insert/journal wear

Bearing insert wear is measured using plastigauge (press gauge), which is inserted into the clearance to be measured. The plastigauge indicates the clearance by the amount it is compressed and widened when the parts are assembled.

Remove the connecting rods. Cut strips of plastigauge to bearing insert width. Place a strip on the connecting rod bearing insert on each connecting rod parallel to the crankshaft so the plastigauge will be compressed between the bearing insert and the connecting rod journal. Install the connecting rods, tightening the nuts with the specified torque (Pg. 201).

Remove the connecting rods, and measure the plastigauge width to determine the bearing insert/journal wear.

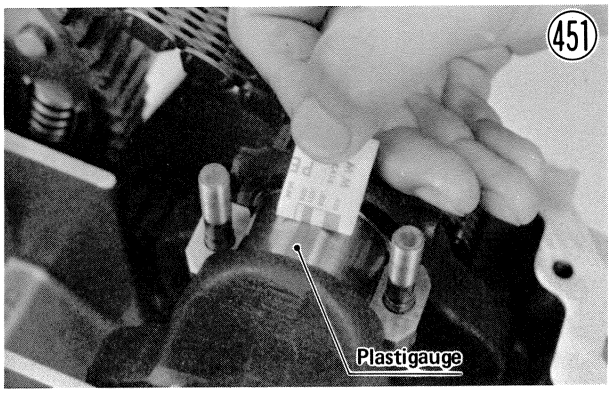

Table 43 Connecting Rod Bearing Insert/Journal Clearance

Standard	Service Limit
0.041~0.071 mm	0.1 mm

If the clearance exceeds the service limit, replace the bearing inserts as follows:

1. With a micrometer, measure the diameter of the crankshaft journals on which the connecting rods fit. Mark each flywheel in accordance with the journal diameter (Table 44).

If the measurement is less than the service limit, replace the crankshaft.

If the measurement is less than the standard value, but is not under the service limit; use bearing inserts painted blue.

NOTE: Any mark already on the flywheel should not be referred to during servicing.

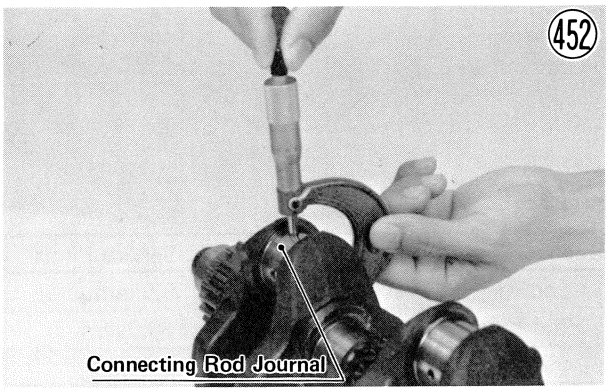

Table 44 Connecting Rod Journal Diameter

Marking	Diameter	Service Limit
No mark	37.984~37.994 mm	37.97 mm
1	37.995~38.000 mm	

2. Put the connecting rod big end caps on the rods and tighten the nuts with the specified torque (Pg. 201). Measure the inside diameter, and mark each connecting rod big end in accordance with the inside diameter (Table 45).

NOTE: The mark already on the big end should almost coincide with the measurement.

Table 45 Connecting Rod Big End Inside Diameter

Marking	Diameter
No mark	41.000~41.010 mm
1	41.011~41.020 mm

3. Select the proper bearing insert in accordance with the combination of the connecting rod and crankshaft coding.

Table 46 Bearing Insert Selection

Crank-shaft marking \ Con-Rod marking	1	Unmarked
1	Black PN 13034-043	Brown PN 13034-046
Unmarked	Blue PN 13034-045	Black PN 13034-043

Table 47 Bearing Insert Thickness

Blue	1.485~1.490 mm
Black	1.480~1.485 mm
Brown	1.475~1.480 mm

Connecting rod side clearance

Measure the side clearance of the connecting rod with a thickness gauge as shown. Replace the crankshaft and the connecting rod if the clearance exceeds the service limit.

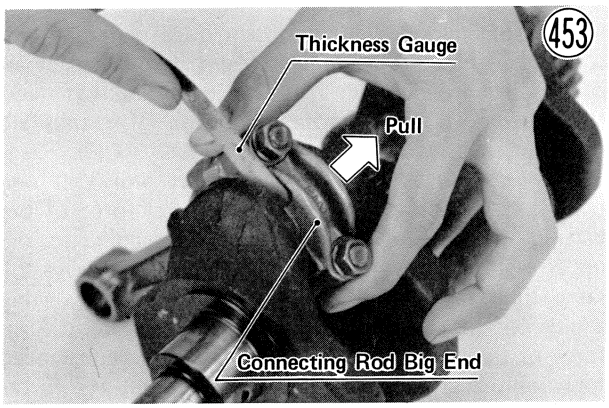

Table 48 Connecting Rod Big End Side Clearance

Standard	Service Limit
0.15~0.25 mm	0.45 mm

Crankshaft runout

Set the crankshaft in a flywheel alignment jig or on **V** blocks, and place a dial gauge against the points indicated. Turn the crankshaft slowly. The maximum difference in gauge readings is the crankshaft runout. If the runout exceeds the service limit, replace the crankshaft.

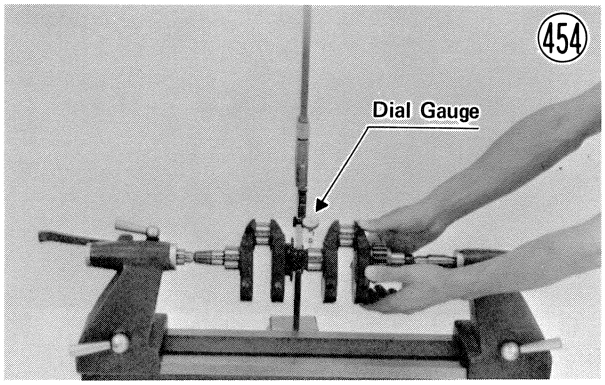

Table 49 Crankshaft Runout

Standard	Service Limit
under 0.02 mm	0.05 mm

Crankshaft bearing insert/journal wear

Remove the crankshaft. Cut strips of plastigauge to bearing insert width. Place a strip on each bearing insert parallel to the crankshaft so the plastigauge will be compressed between the insert and the crankshaft journal. Install the crankshaft and the lower crankcase half without turning the crankshaft, and tighten the bolts in the correct sequence with the specified amount of torque (Pg. 67).

Remove the crankshaft (making sure that the crankshaft does not turn at any time), and measure the plastigauge width to determine the bearing insert/journal wear. If either clearance exceeds the service limit, replace all six bearing inserts, and check the crankshaft journals.

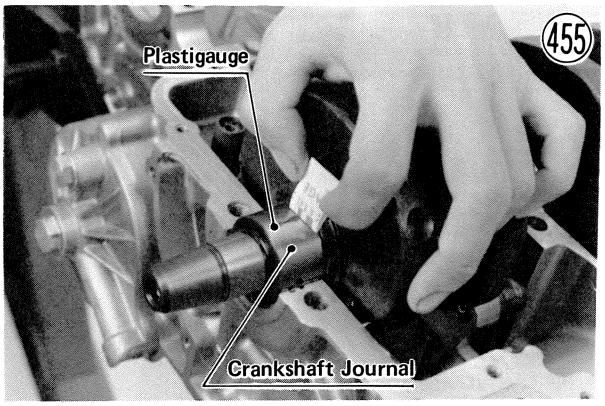

Table 50 Crankshaft Bearing Insert/Journal Clearance

Standard	Service Limit
0.040~0.082 mm	0.11 mm

Measure the journals which wear on these bearing inserts. If the micrometer reading is less than the service limit, replace the crankshaft.

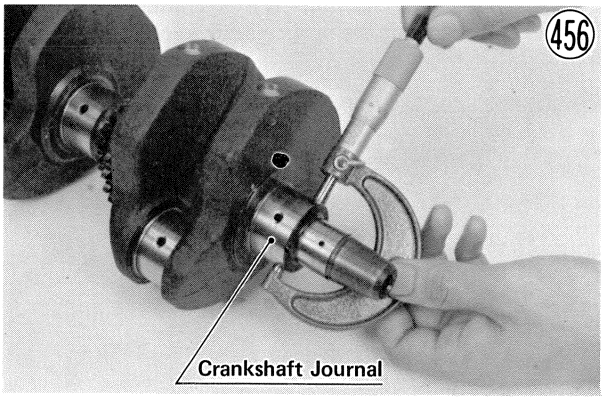

Table 51 Crankshaft Journal Diameter (Not Connecting Rod)

Standard	Service Limit
37.984~38.000 mm	37.964 mm

Measure the crankshaft thrust clearance with a thickness gauge as shown. Replace the crankcase halves as a set, if the clearance exceeds the service limit.

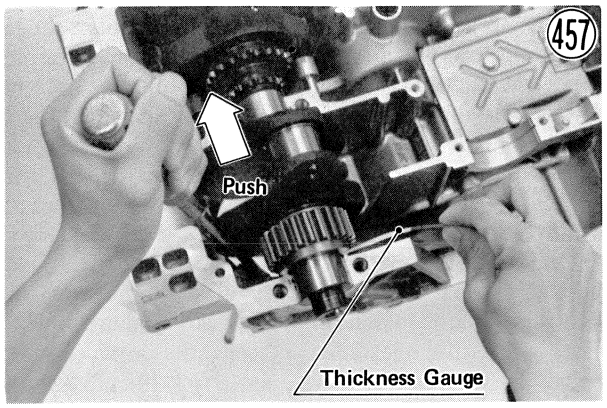

Table 52 Crankshaft Thrust Clearance

Standard	Service Limit
0.05~0.23 mm	0.45 mm

NOTES:
1. The upper crankcase half and the lower crankcase half are machined at the factory in the assembled state, so the crankcase halves must be replaced as a set.
2. When replacing new crankcase halves, to seat the bypass valve steel ball in the bottom of the upper crankcase half, insert a mild steel rod and hammer lightly on the rod.

Oil passage cleaning

There is an oil passage running between the crankshaft journals on each side. Use compressed air to remove any foreign particles or residue that may have accummulated in these passages.

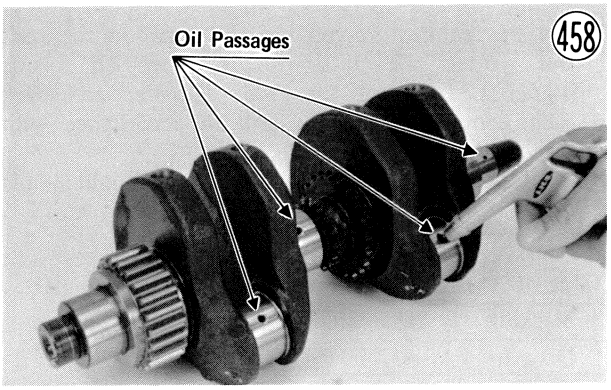

BALANCER MECHANISM

The balancer mechanism basically consists of two weights, which are chain-driven by the crankshaft. The following explanation covers how this mechanism reduces vibration.

The vibration of a 4-stroke, 2-cylinder engine is generally greater with larger engine displacement. This up-and-down vibration is natural due to the mechanics of a reciprocating engine, but the proper addition of counterweights on the crankshaft can reduce this vibration. However, troublesome revolving vibration remains unless some additional measure is taken.

Fig. 459 shows the internal engine forces when the centrifugal force of the counterweights is one half the inertial force of the pistons. The arrows show the amount and direction of these forces.

As the crankshaft rotates clockwise, A~E in Fig. 459, one half of the inertial force of the pistons is negated by the vertical component of the centrifugal force of the counterweights. However, the horizontal component of the centrifugal force of the counterweights (brought about by having counterweights) is not negated by anything. The thick arrows indicate the resulting unbalanced force, which is the main cause of engine revolving vibration.

The balancer mechanism includes two balancing weights having one half the centrifugal force of the counterweights. A balancing weight is installed at an equal distance on each side of the crankshaft and chain-driven in the opposite direction of crankshaft rotation.

Fig. 461 shows how this mechanism works at one crankshaft position (D). The centrifugal force of the balancer weights exerts a pull on the engine to the upper right as the arrows in the figure show. At the same time the crankshaft counterweights are exerting a pull on the engine to the lower left. The centrifugal force of the two balancer weights equals the unbalanced force of the crankshaft counterweights, but the forces

Vibration Reduction with Crankshaft

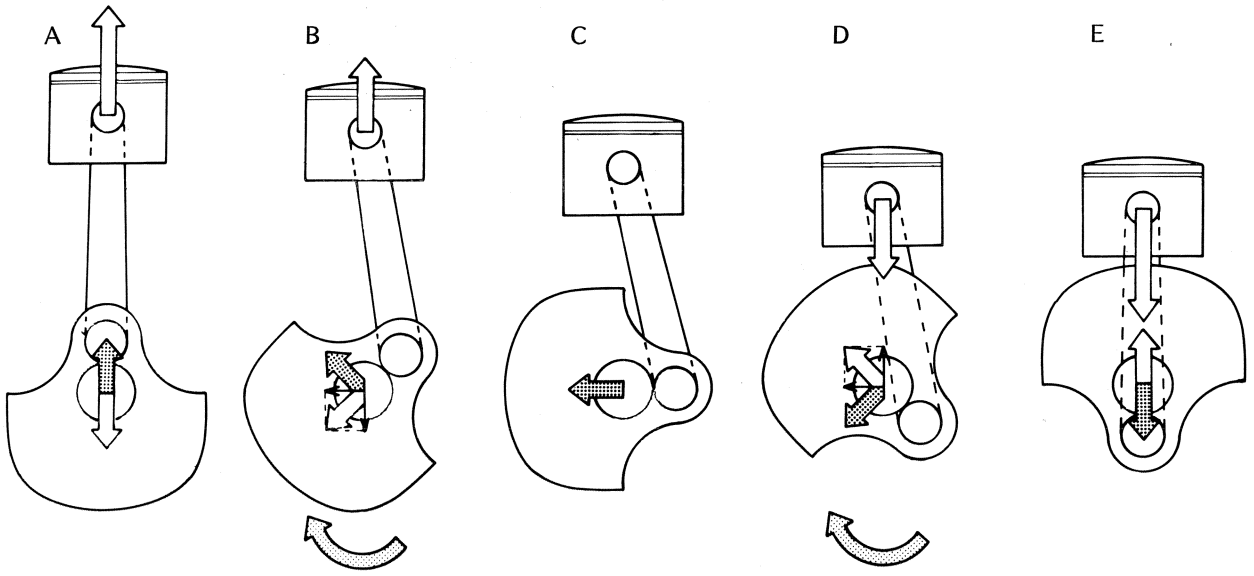

cancel each other since the directions of these forces are opposite. With the forces cancelled, engine vibration is greatly reduced. At other crankshaft positions, these two forces are also equal and opposing such that they cancel each other, keeping the system always in balance.

The balancer weights, turning at the same rpm as the crankshaft, are chain-driven by a sprocket on the crankshaft. The balancer chain is an endless type for maximum durability and wears very slowly due to its ample lubrication. The chain drives the weights through a sprocket on each balancer shaft. Each sprocket has four springs wedged between the sprocket and the weights to protect the sprocket and chain from the shock of power impulses. In the center of each spring is a pin, which prevents damage to the spring from excessive compression.

If balancer mechanism trouble develops, such as excessive shaft or chain wear, not only are the bearings and crankcase parts affected but the resulting power loss and engine vibration may adversely affect performance and overall engine life.

Balancer shaft wear

Measure with a micrometer the diameter of each shaft where it wears on the needle bearings. Replace a shaft and its needle bearings if it has worn down on either side to less than the service limit.

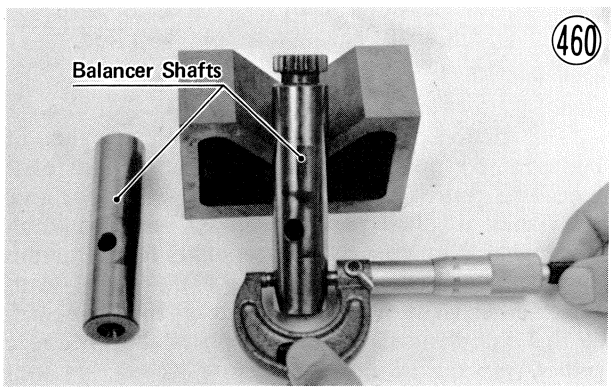

Balancer Mechanism

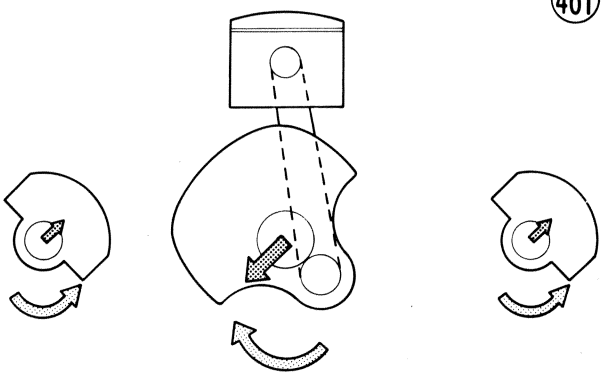

Table 53 Balancer Shaft Diameter

Standard	Service Limit
23.987~24.000 mm	23.95 mm

Spring free length

Measure the free length of each spring with vernier calipers. Replace any spring which is shorter than the service limit.

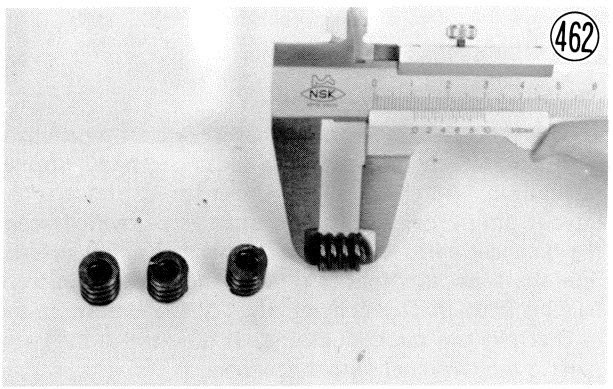

Table 54 Balancer Spring Free Length

Standard	Service Limit
10.8~11.2 mm	10.4 mm

Chain wear

Remove the chain, hold it taut with a force of about 5 kg in some manner such as the one shown in Fig. 463, and measure a 20-link length. Since the chain may wear unevenly, take measurements at several places. If any measurement exceeds the service limit, replace the chain.

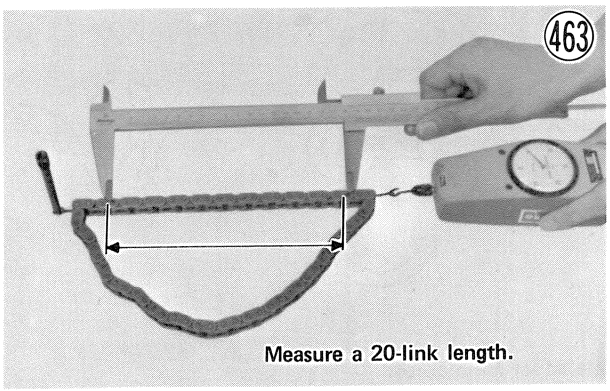

463

Measure a 20-link length.

Table 55 Balancer Chain Length

Standard	Service Limit
190.5~190.9 mm	193.4 mm

When replacing a chain with a new one, inspect all the sprockets. If either of the balancer mechanism sprockets is damaged or overly worn, replace it. If the crankshaft sprocket is damaged or overly worn, replace the crankshaft.

NOTE: If the crankshaft is replaced, select the right bearing insert in accordance with the combination of the connecting rod and the crankshaft marks (Pg. 133).

Chain guide wear

Visually inspect the rubber part of each chain guide. If it is worn down or damaged, replace the guide.

Measure the depth of the grooves where the chain links run (Fig. 418). If wear exceeds the service limit, replace the guide.

Table 56 Balancer Chain Guide Wear

Service Limit
1.5 mm

Chain tensioner inspection

This balancer mechanism has a ratchet-type chain tensioner, which consists of a tensioner body, spring, ratchet pin, and chain guide. Under spring pressure, the ratchet pin pushes against the chain guide, which keeps the balancer chain taut. The ratchet bushing is pressed into the tensioner hole to prevent the ratchet pin from backing into the tensioner body. Visually inspect the ratchet pin and ratchet bushing. If they are badly worn, replace the tensioner with a new one.

Measure the free length of the spring. If it is shorter than the service limit, replace the spring with a new one.

Table 57 Spring Free Length

Standard	Service Limit
45.4 mm	43.0 mm

CLUTCH

Fig. 465 shows the construction of the clutch, which is a wet, multi-plate type with 8 friction plates ⑨ and 7 steel plates ⑩. The friction plates are made of cork, used for its high coefficient of friction, bonded on a steel core, which provides durability and warp resistance. The clutch housing ⑧ has a reduction sprocket on one side and contains springs to absorb shock from the drive train.

The clutch release mechanism is shown in Fig. 464. The clutch release outer worm gear ⑥ and the inner worm gear ⑦ are made of steel. Balls ④ are installed between the outer and inner worm gears to reduce the friction between them. Assembled into the center of the release inner gear is the clutch adjusting screw ②, which pushes on the push rod ⑪ and steel ball inside the drive shaft to release the clutch.

Clutch Release Mechanism

464

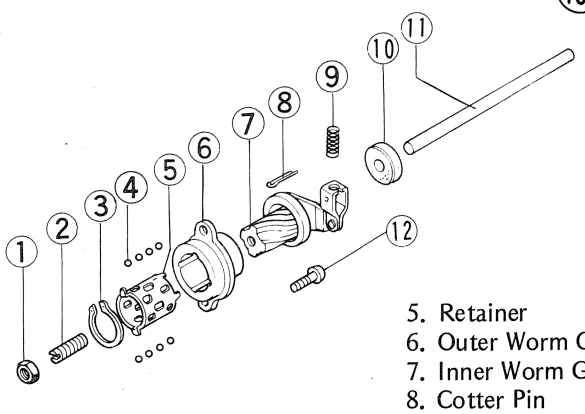

1. Locknut
2. Adjusting Screw
3. Circlip
4. Steel Ball
5. Retainer
6. Outer Worm Gear
7. Inner Worm Gear
8. Cotter Pin
9. Spring
10. Grease Seal
11. Push Rod
12. Screw

The friction plates are keyed to the clutch housing by tangs on the outer circumference of each plate. Since the clutch housing is chain driven directly from the crankshaft, these plates are always turning any time the engine is running. The steel plates have a toothed inner circumference and mesh with the splines in the clutch hub. The hub is mounted on the drive shaft, so that the drive shaft and steel plates always turn together.

Clutch

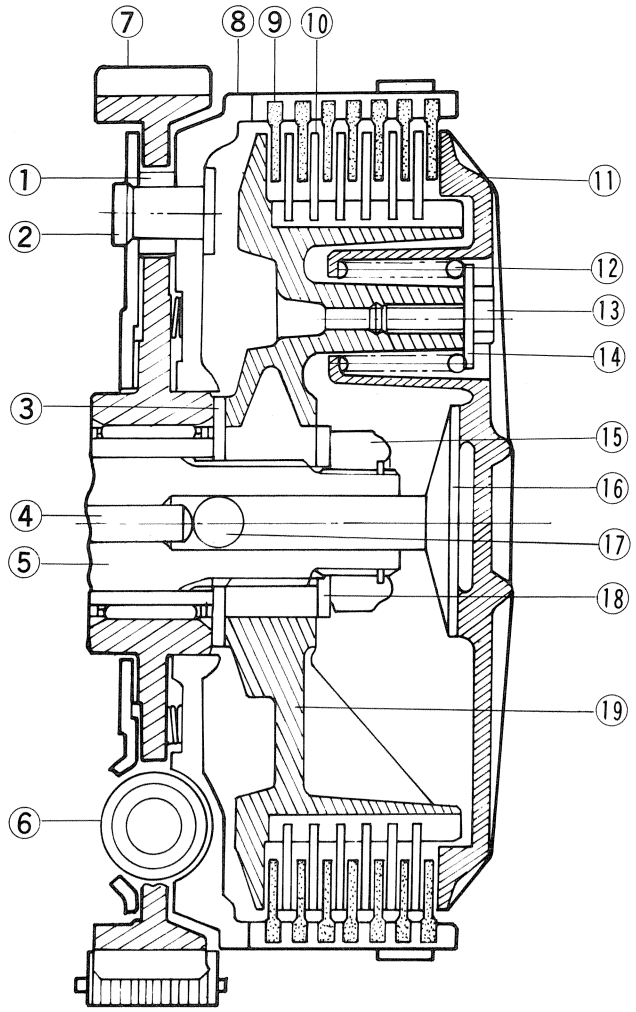

1. Collar
2. Rivet
3. Thrust Washer
4. Push Rod
5. Drive Shaft
6. Shock Damper Spring
7. Clutch Housing Sprocket
8. Clutch Housing
9. Friction Plate
10. Steel Plate
11. Spring Plate
12. Spring
13. Bolt
14. Washer
15. Clutch Hub Nut
16. Spring Plate Pusher
17. Steel Ball
18. Washer
19. Clutch Hub

One end of each clutch spring forces against its washer and bolt, which is threaded into the clutch hub. The other end forces against the spring plate. When the clutch is left engaged, the springs force the spring plate, friction plates, steel plates, and clutch hub tightly together so that the friction plates will drive the steel plates and transmit power to the transmission drive shaft.

When the clutch lever is pulled to release (disengage) the clutch, the clutch cable turns the clutch release inner worm gear in towards the clutch. The clutch adjusting screw, assembled inside the clutch release inner worm gear, then pushes the push rod, which through the steel ball and spring plate pusher pushes the spring plate. Since the spring plate moves the same distance that the inner worm gear moves and the clutch hub remains stationary, the springs are compressed and pressure is taken off the clutch plates. Because the plates are no longer pressed together, power transmission from the crankshaft to the transmission drive shaft is interrupted. As the clutch lever is released, the clutch springs return the spring plate and once again force the spring plate, plate assembly, and clutch hub tightly together.

A clutch that does not properly disengage will cause shifting difficulty and possible transmission damage. On the other hand, a slipping clutch will reduce power transmission efficiency and may overheat and burn out. A clutch that does not properly disengage may be caused by:

1. Excessive clutch lever play.
2. Clutch plates that are warped or too rough.
3. Uneven clutch spring tension.
4. Deteriorated engine oil.
5. Engine oil viscosity too high.
6. Engine oil level too high.
7. The clutch housing frozen on the drive shaft.
8. A defective clutch release mechanism.
9. An unevenly worn clutch hub or housing.
10. Missing parts.

A slipping clutch may be caused by:

1. No clutch lever play.
2. Worn friction plates.
3. Weak clutch springs.
4. The clutch cable not sliding smoothly.
5. A defective clutch release mechanism.
6. An unevenly worn clutch hub or housing.

Clutch noise may be caused by:

1. Excessively worn primary chain and sprockets.

2. Damaged sprocket teeth.
3. Too much clearance between the friction plate tangs and the clutch housing.
4. Weak or damaged damper spring(s).

Spring tension

Remove the springs, and set them, one at a time, on a spring tension testing device. Compress the spring, and read the tension at the test length. If the spring tension at the specified length is weaker than the service limit, replace the spring.

Spring Tension Measurement (466)

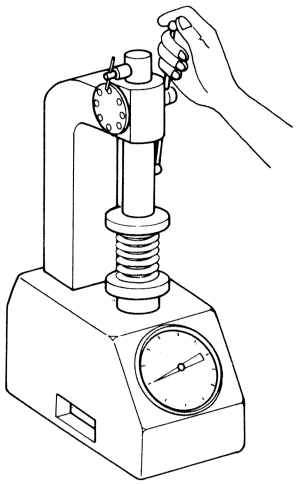

Table 58 Clutch Spring Tension

Length	Standard	Service Limit
23.5 mm	23.5 ~ 26.5 kg	21.5 kg

Friction plate wear, damage

Visually inspect the friction plates to see whether or not they show any signs of seizure, overheating, or unevenly worn. Measure the thickness of the plates with vernier calipers.

If any plates show signs of damage, or if they have worn past the service limit, replace them with new ones.

Firction Plate Measurement (467)

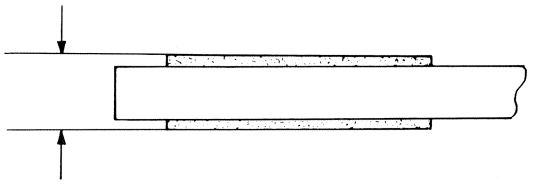

Table 59 Friction Plate Thickness

Standard	Service Limit
2.9 ~ 3.1 mm	2.7 mm

Clutch plate warp

Place each clutch plate on a surface plate, and measure the gap between each clutch plate and the surface plate. This gap is the amount of clutch plate warp.

Replace any plates warped over the service limit.

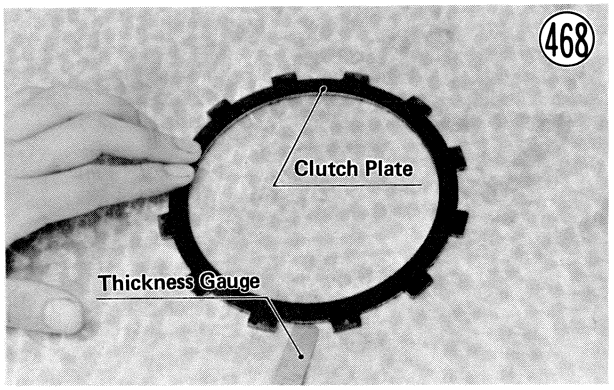

Table 60 Clutch Plate Warp

Standard	Service Limit
under 0.2 mm	0.4 mm

Friction plate/clutch housing clearance

Measure the clearance between the tangs on the friction plates and the fingers of the clutch housing. If this clearance is excessive, the clutch will be noisy.

If the clearance exceeds the service limit, replace the friction plates. Also, replace the clutch housing if it is unevenly or badly worn where the friction plates wear against it.

Friction Plate/Clutch Housing Clearance (469)

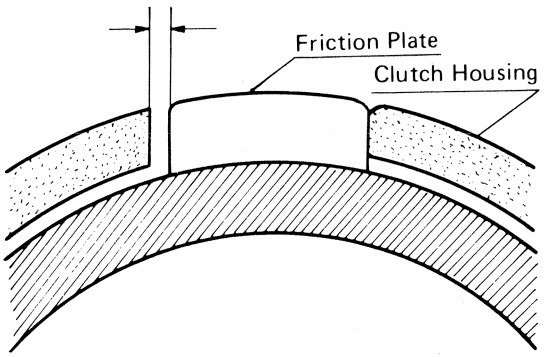

Table 61 Friction Plate/Clutch Housing Clearance

Standard	Service Limit
0.1 ~ 0.3 mm	0.5 mm

Clutch housing sprocket damage

Inspect the teeth on the clutch sprocket. Any light damage can be corrected with an oilstone, but the clutch housing must be replaced if the teeth are badly damaged. Damaged teeth on the clutch housing sprocket indicate that the primary chain, by which it is driven,

may also be damaged. At the same time that the clutch housing sprocket is repaired or replaced, the primary chain should be inspected, and then replaced if necessary.

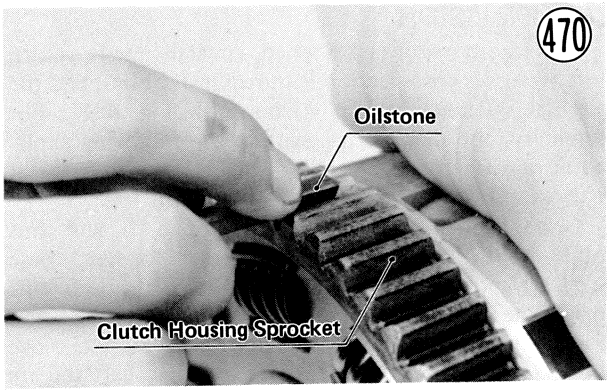

Clutch housing/drive shaft sleeve wear

Measure the diameter of the drive shaft sleeve with a micrometer. Replace the drive shaft sleeve if the diameter is less than the service limit. Measure the inside diameter of the clutch housing with a cylinder gauge. Replace the clutch housing if the diameter exceeds the service limit. When replacing the clutch housing and/or drive shaft sleeve, replace the clutch housing needle bearing also.

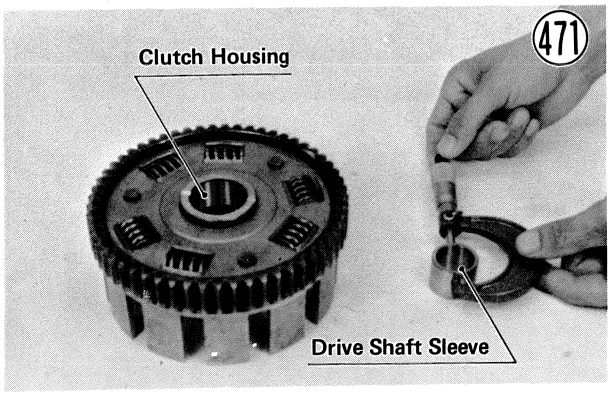

Table 62 Clutch Housing Inside Diameter

Standard	Service Limit
37.000~37.016 mm	37.04 mm

Table 63 Drive Shaft Sleeve Outside Diameter

Standard	Service Limit
31.995~31.998 mm	31.97 mm

Needle bearing wear

The rollers in the needle bearing wear so little that the wear is difficult to measure. Instead, inspect the needle bearing for abrasion, color change, or other damage. If there is any doubt as to its condition, replace the needle bearing.

Clutch hub damage

Inspect where the teeth on the steel plates wear against the splines of the clutch hub. If there are notches worn into the splines, replace the clutch hub.

Clutch release gear wear

With the clutch release assembled, push the inner worm gear back and forth in the direction of the shaft without turning it. If there is excessive play, replace the clutch release assembly.

Lubrication

Lubricate the clutch release worm gears with grease.

PRIMARY CHAIN

The power transmission from the crankshaft to the drive shaft is chain-drive, utilizing a Hy-Vo (high velocity) chain. The Hy-Vo chain is a rocker-joint type with a pin and rocker construction. Some of the special features of the Hy-Vo chain are its capacity to transmit much power at high speed, its resistance to heat seizure due to a construction which employs rolling rather than sliding friction, quiet operation even at high rpm, and low power loss.

Wear

A primary chain which has worn such that it is 1.4 % or more longer than when new is no longer safe for use and should be replaced. Split the crankcase. Leaving the transmission and crankshaft in place, inspect the wear by measuring the chain slack, and replace the chain if it has worn past the service limit. The replacement chain must be the Tsubakimoto Hy-Vo 3/8P-1W, 76-link chain.

Table 64 Primary Chain Play

Service Limit
32 mm

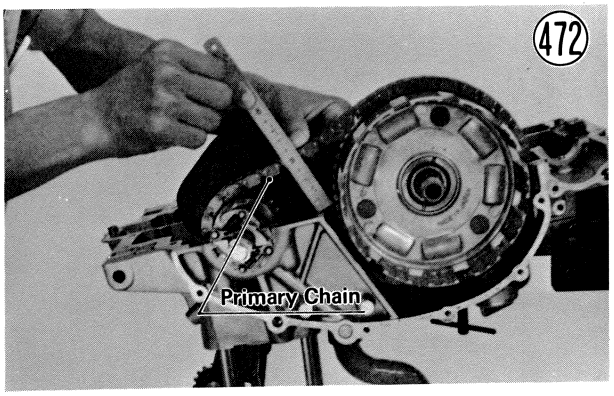

When a new chain is installed, check the chain guides, and replace them with new ones if necessary.

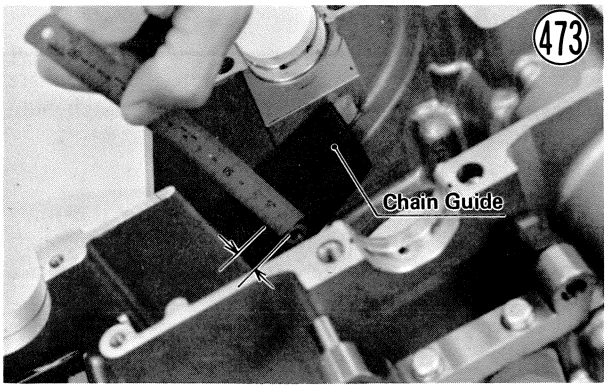

Table 65 Primary Chain Guide Thickness (Upper, Lower)

Standard	Service Limit
6.0 mm	3.0 mm

NOTE: When installing new chain guides, apply a non-permanent locking agent to the chain guide screws.

TRANSMISSION

The transmission is a 5-speed, constant mesh, return shift type. Its cross section is shown in Fig. 480, and the external shift mechanism is shown in Fig. 481. For simplicity, the drive shaft gears in the following explanation are referred to as "D" (e.g., D1=drive shaft 1st gear) and the output shaft gears as "O".

Gears D3, O4, and O5 are all splined to, and thus rotate with their shafts. During gear changes, these gears are moved sideways on their shafts by the 3 shift forks, one for each gear. Gears D4, D5, O1, O2, and O3 rotate free of shaft rotation, but cannot move sideways. Gears D1 and D2 rotate with the shaft and are unable to move sideways.

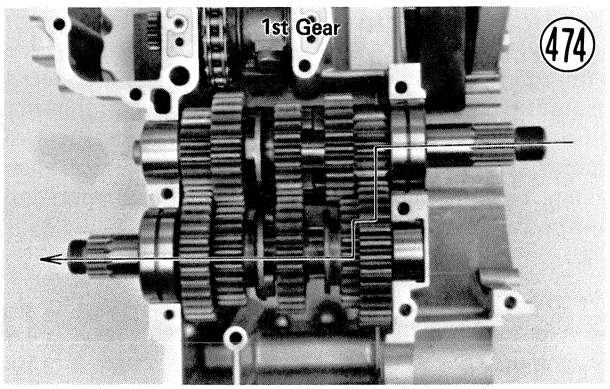

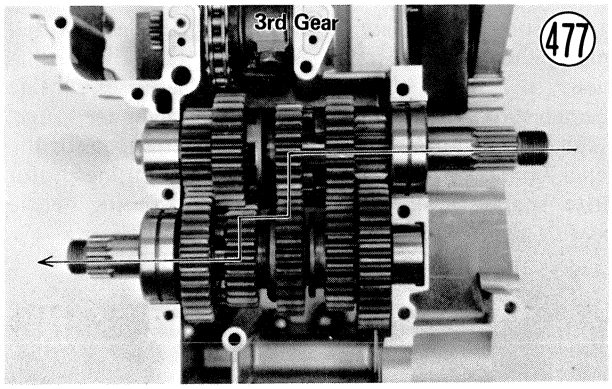

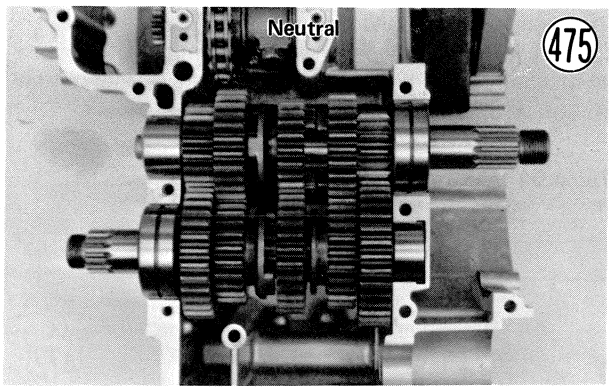

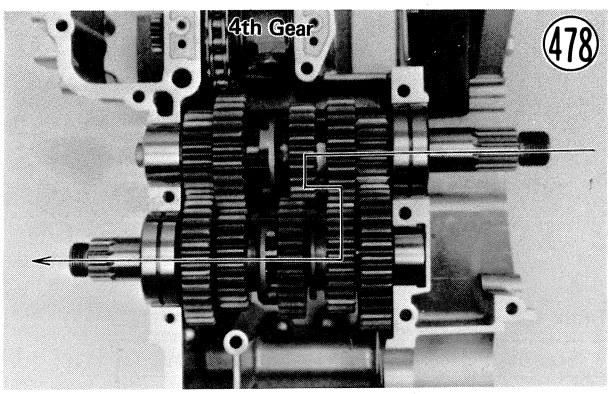

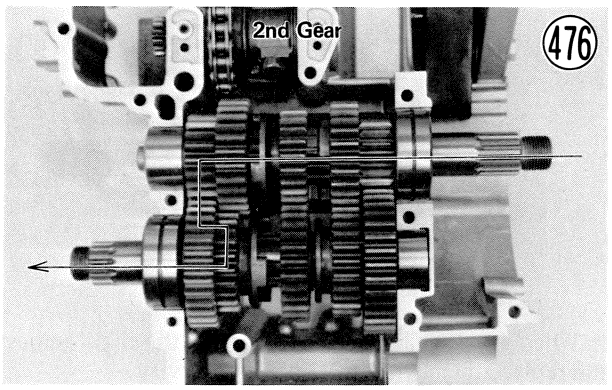

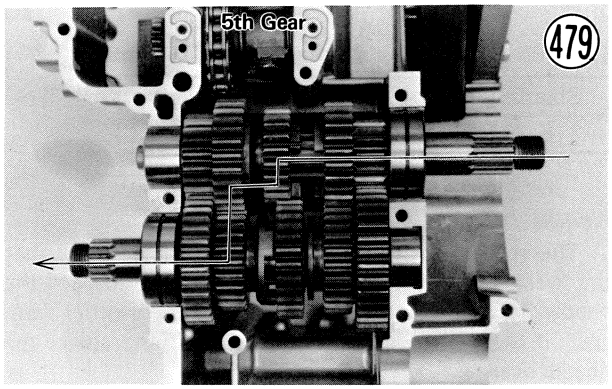

Transmission

480

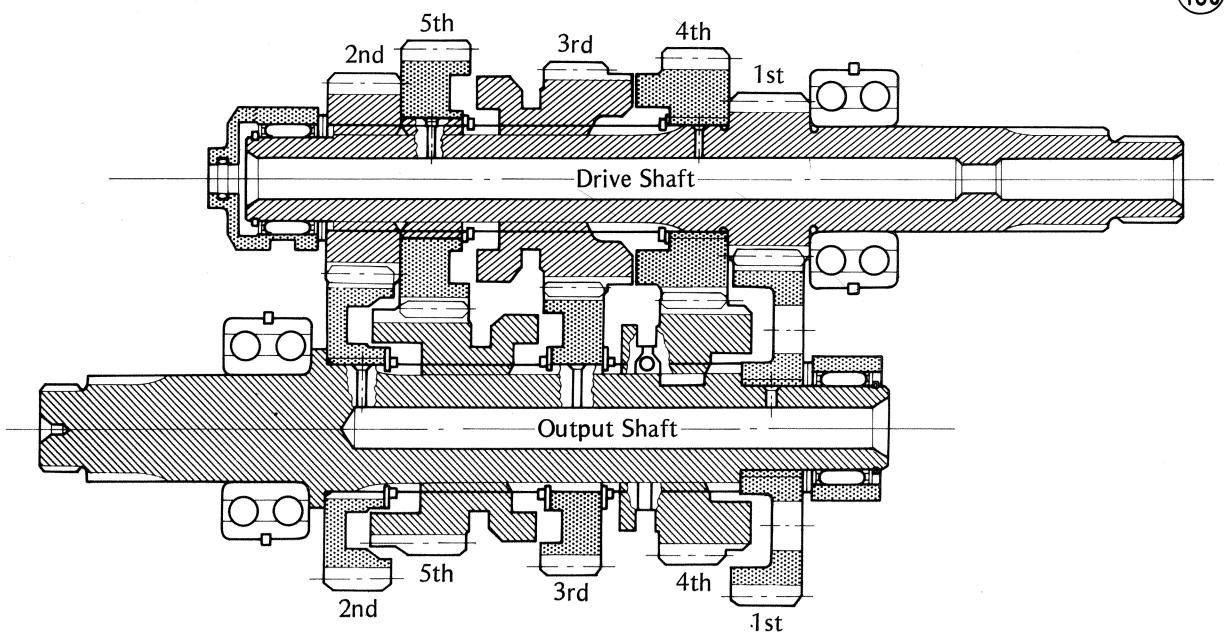

Shift Mechanism

481

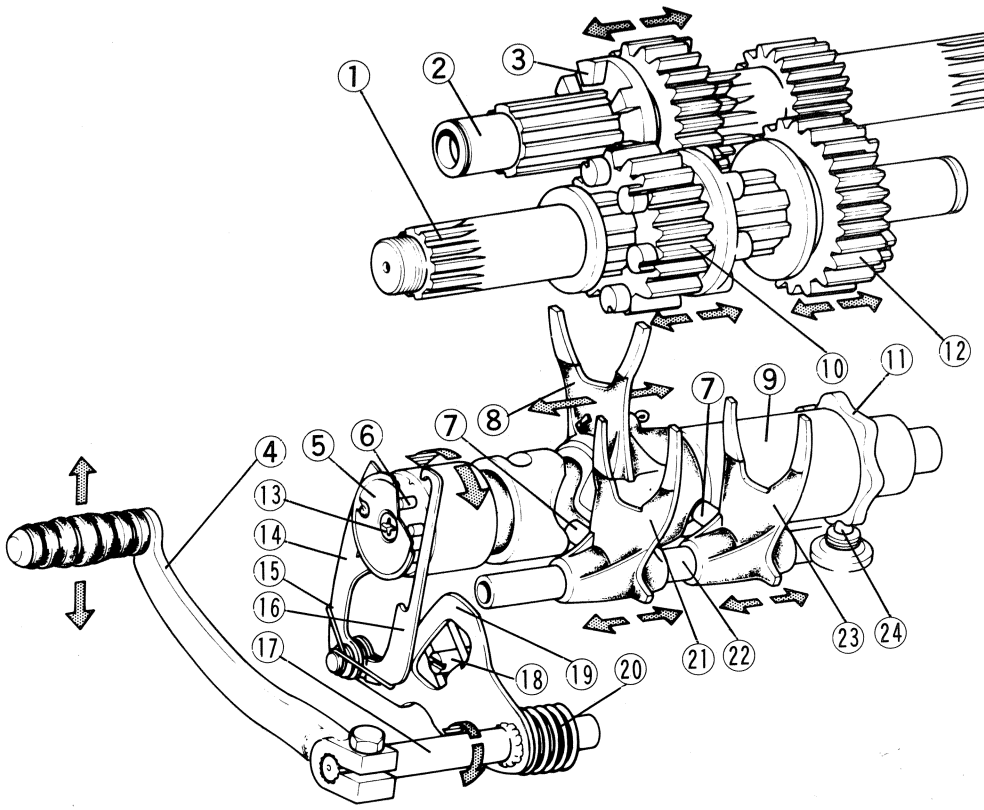

1. Output Shaft
2. Drive Shaft
3. Drive 3rd Gear
4. Shift Pedal
5. Shift Drum Pin Plate
6. Shift Drum Pin
7. Shift Fork Guide Pin
8. Shift Fork (D3)
9. Shift Drum
10. Output 5th Gear
11. Operating Plate
12. Output 4th Gear
13. Screw
14. Shift Mechanism Arm
15. Pawl Spring
16. Overshift Limiter
17. Shift Shaft
18. Return Spring Pin
19. Shift Lever
20. Return Spring
21. Shift Fork (O5)
22. Shift Rod
23. Shift Fork (O4)
24. Positioning Pin

When the shift pedal ④ is raised or lowered, the shift shaft ⑰ turns, a pawl on the external shift mechanism arm ⑭ catches on one of the shift drum pins ⑥, and the shift drum ⑨ turns. At the same time, the overshift limiter ⑯ on the shift lever ⑲ catches another pin as shown in Fig. 483. As the shift drum turns, the shift fork guide pins ⑦ (3), each riding in a groove in the shift drum, change the position of one or another of the shift forks ⑧, ㉑, ㉓, in accordance with the winding of the grooves. The shift fork ears then determine the position of gears D3 ③, O4 ⑫, and/or O5 ⑩. Refer to Fig. 474 to 479 for the gear position and drive path for neutral and each of the 5 gears.

A pawl spring ⑮ is fitted on the external shift mechanism to keep the shift arm and overshift limiter pressed against the shift drum pins to ensure proper pawl and pin contact. When the shift pedal is released after shifting, the return spring ⑳, returns the shift lever and shift pedal back to their original positions. So that the transmission will remain where it was shifted, the shift drum positioning pin spring pushes the shift drum positioning pin ㉔ into one of six notches on the shift drum operating plate ⑪. Five of these notches are equally spaced and correspond to the 5 gears. The other notch is halfway between the notches for 1st and 2nd gears, and corresponds to the half-stroke shift pedal movement from 1st or 2nd gear required to shift into neutral.

The return spring pin ⑱ on the side of the crankcase passes through a cutout on the shift mechanism lever. This pin engages between the two ends of the shift mechanism return spring. Normally, the return spring pin should not make contact with the cutout on the lever, because the overshift limiter is the primary control for shift lever movement.

Overshift Limiter:

Each time that the shift pedal is operated, the overshift limiter interlocks with the shift drum pins to prevent overshifting. On a full upshift or downshift stroke, the limiter "hooks" catch the shift drum pins to keep the inertia of the heavy shift drum from allowing it to rotate beyond the intended gear position, particularly on a fast shift. At the same time, the overshift limiter arrests the shift lever's motion at the end of the stroke to aid in preventing overshifting.

Shift Mechanism Arm and Overshift Limiter Operation

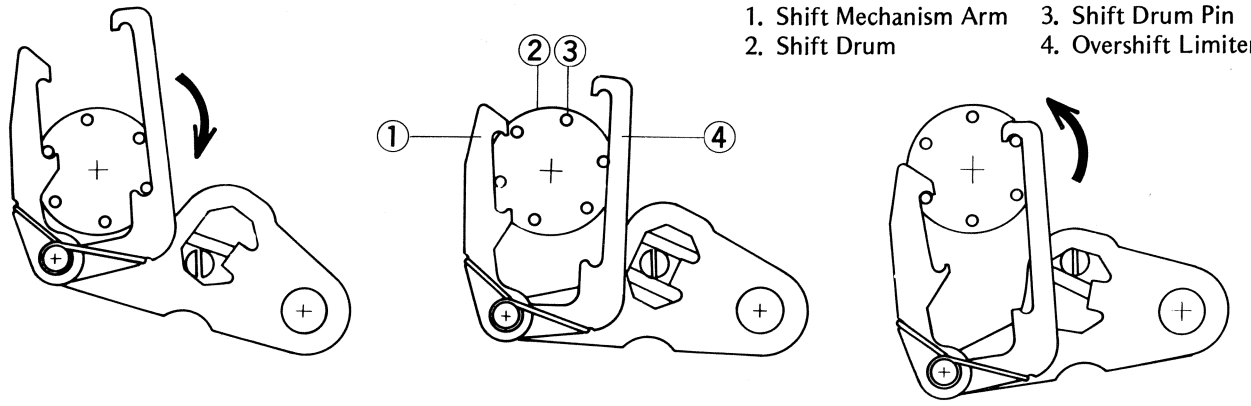

1. Shift Mechanism Arm
2. Shift Drum
3. Shift Drum Pin
4. Overshift Limiter

Neutral Locator ('78 and later models)

Inside gear O4 three steel balls are located 120° apart, and serve to facilitate neutral location when shifting from first gear. When the motorcycle is stopped and the output shaft is not turning, one or two of these balls falls down into its respective groove in the output shaft. When the shift pedal is operated to shift from first toward second, gear O4 starts moving, but halfway toward its second gear position, the steel ball(s) hits the end of the groove(s) in the output shaft, stopping gear O4 from moving, stopping the shift drum from turning, and leaving the transmission gears in the neutral position.

Neutral Locator

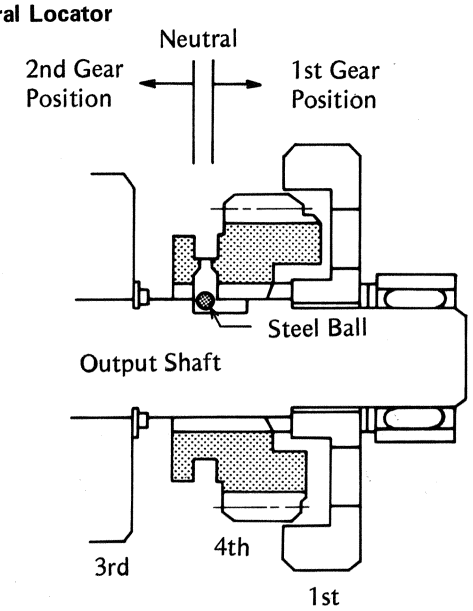

Neutral Indicator Switch

A neutral indicator light is provided so that the rider can readily determine whether or not the transmission is in neutral. The neutral indicator switch, installed in the external shift mechanism cover, consists of a spring loaded pin which contacts a nub on the shift drum pin holder when the transmission is in neutral. This completes the neutral indicator light circuit, which turns the neutral indicator light on.

Transmission or external shift mechanism damage, causing the transmission to misshift, overshift, and/or

jump out of gear, brings about more damage to the transmission and also overrev damage to the engine itself. An improperly functioning transmission or external shift mechanism may be caused by the following:

1. Loose return spring pin
2. Broken or weakened return spring or shift drum positioning pin spring
3. Broken or weakened shift pawl spring
4. Damaged shift mechanism arm
5. Loose shift drum guide bolt
6. Bent or worn shift fork(s)
7. Worn shift fork grooves on gears D3, O4, and/or O5
8. Worn shift fork guide pin(s)
9. Worn shift drum groove(s)
10. Binding of shift drum positioning pin in the positioning bolt
11. Worn or damaged gear dogs, gear dog holes, and/or gear dog recesses
12. Improperly functioning clutch or clutch release
13. Improper assembly or missing parts

Transmission noise results from worn or damaged shafts, bearings, gear hubs or teeth, etc.

External shift mechanism inspection

Inspect the shift pawl spring, shift pawls, and return spring. Replace any broken or otherwise damaged parts.

Measure the free length of the shift drum positioning pin spring. If it exceeds the service limit, replace it with a new one.

Table 66 Shift Drum Positioning Pin Spring Length

Standard	Service Limit
32.3 mm	30.7 mm

Check to see if the return spring pin is loose. If it is remove it and apply a non-permanent locking agent to the threads. Then screw it back in, tightening its locknut.

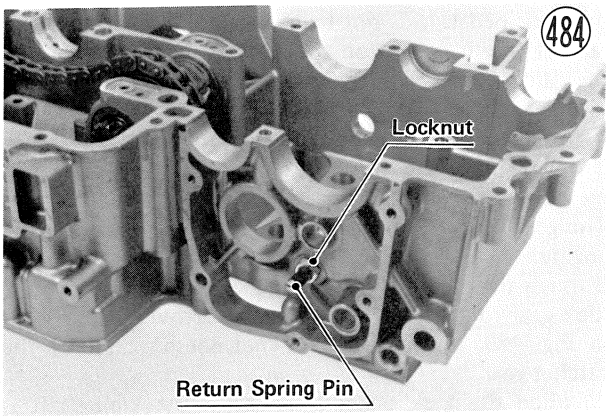

Gear backlash

Split the crankcase. Leaving the transmission in place, measure the backlash between gears O1 and D1, O2 and D2, O3 and D3, O4 and D4, O5 and D5. To measure the backlash, set a dial gauge against the teeth on one gear, and move the gear back and forth while holding the other gear steady. The difference between the highest and the lowest gauge reading is the amount of backlash. Replace both gears if the amount of backlash exceeds the service limit.

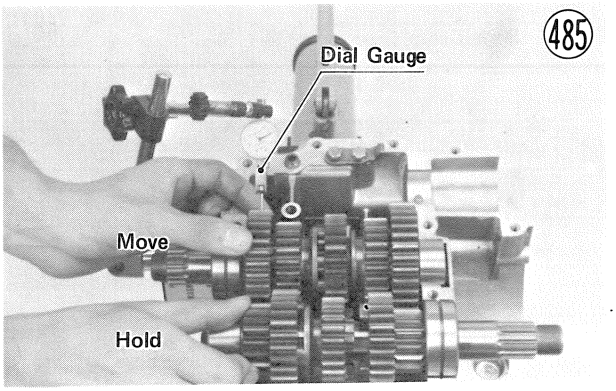

Table 67 Gear Backlash

Standard	Service Limit
under 0.17 mm	0.25 mm

Shift fork bending

Visually inspect the shift forks, and replace any fork that is bent. A bent fork could cause difficulty in shifting or allow the transmission to jump out of gear when under power.

Shift fork/gear groove wear

Measure the thickness of the ears of each shift fork, and measure the width of the shift fork grooves on gears D3, O4, and O5. If the thickness of a shift fork ear is under the service limit, the shift fork must be replaced. If a gear shift fork groove is worn over the service limit, the gear must be replaced.

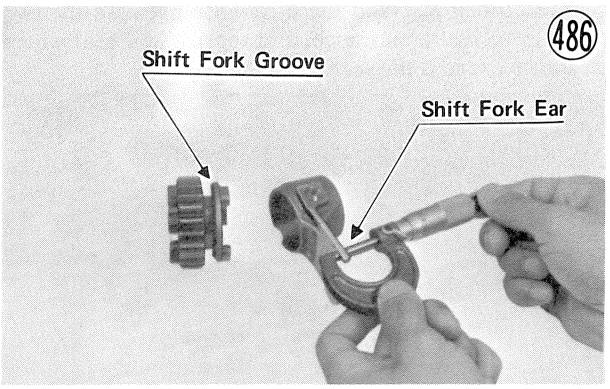

Table 68 Shift Fork Thickness

Standard	Service Limit
4.9 ~ 5.0 mm	4.7 mm

Table 69 Gear Shift Fork Groove Width

Standard	Service Limit
5.05 ~ 5.15 mm	5.25 mm

Shift fork guide pin/shift drum groove wear

Measure the diameter of each shift fork guide pin, and measure the width of each shift drum groove. Replace any shift fork on which the guide pin has worn past the service limit. If a shift drum groove is worn past the service limit, replace the shift drum.

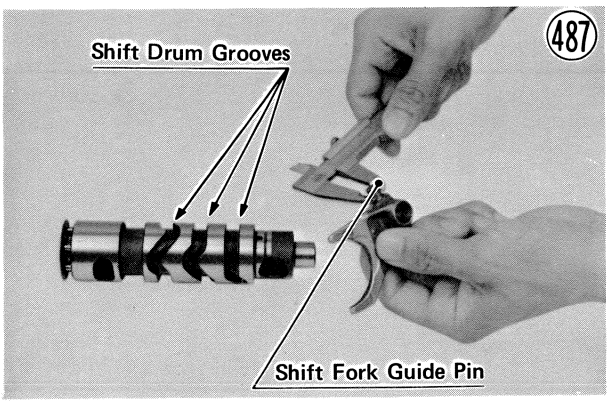

Table 70 Shift Fork Guide Pin Diameter

	Standard	Service Limit
4th, 5th	7.9~8.0 mm	7.85 mm
3rd	7.978~8.000 mm	7.92 mm

Table 71 Shift Drum Groove Width

Standard	Service Limit
8.05~8.20 mm	8.25 mm

Gear dog, gear dog hole, gear dog recess damage

Visually inspect the gear dogs, gear dog holes, and gear dog recesses. Replace any gears that have damaged, unevenly or excessively worn dogs, dog holes, or dog recesses.

Gear/shaft wear

Measure the diameter of each shaft and bush with a micrometer, and measure the inside diameter of each gear listed below. Find the difference between the two readings to figure clearance, and replace any gear where clearance exceeds the service limit.

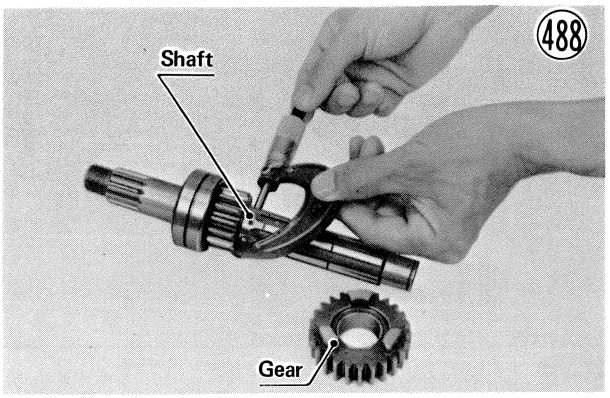

Table 72 Gear/Shaft, Gear/Bush Clearance

Gear	Standard	Service Limit
O2, O3, D4, D5	0.020~0.062 mm	0.16 mm
O1	0.014~0.048 mm	0.15 mm

Shaft/needle bearing outer race wear

Measure the diameter of the drive and output shafts where it passes through the needle bearing. Replace the shaft if the diameter is less than the service limit. Measure the inside diameter of the needle bearing outer race with a cylinder gauge. Replace the outer race if the diameter exceeds the service limit. When replacing the shaft and/or outer race, replace the needle bearing also.

Table 73 Shaft, Outer Race Wear

	Standard	Service Limit
Shaft	19.980~19.993 mm	19.96 mm
Outer Race	26.014~26.024 mm	26.04 mm

Needle bearing wear, damage

The rollers in the needle bearings wear so little that the wear is difficult to measure. Instead, inspect the bearings for abrasions, color change, or other damage. If there is any doubt as to the condition of either bearing, replace it.

Ball bearing wear, damage

Since the ball bearings are made to extremely close tolerances, the wear must be judged by feel rather than by measurement.

Clean each bearing in a high flash-point solvent, dry it (do not spin it while it is dry), and oil it. Spin it by hand to check its condition. If it is noisy, does not spin smoothly, or has any rough spots, replace it.

KICKSTARTER

Kickstarter construction is shown in Fig. 489. The kick gear is connected to the primary sprocket on the crankshaft through the output shaft 1st gear, drive shaft 1st gear, clutch housing sprocket, and primary chain.

The kick gear ⑥, constructed with a ratchet on one side, is always meshed with the output shaft 1st gear and turns freely anytime the output shaft is turning. The ratchet gear ⑤, mounted on the splined portion of the kick shaft ⑩, turns with the kick shaft and can be moved sideways on the shaft. A spring ④ presses on the ratchet gear in the direction of the kick gear. But when the kick pedal ⑫ is not being operated, an arm on the ratchet gear is caught on the stopper ②, which prevents the ratchet gear from meshing with the ratchet on the kick gear.

When the kick pedal is operated, the ratchet gear arm is freed from the stopper and the ratchet gear then meshes with the kick gear ratchet, rotating the kick gear. The gear train of the kickstarter system then cranks the engine. As the engine starts, the primary sprocket through the gear train turns the kick gear. But, since the kick gear rotates in the direction of arrow "A" as shown in Fig. 489, the kick gear ratchet doesn't catch on the ratchet gear.

When the kick pedal is released, the kick shaft is turned by the return spring, bringing the kick pedal to its original position. At the same time, the ratchet gear arm rides up the stopper, breaking away from the kick gear. The kick gear now turns freely.

If the kick pedal return spring weakens or breaks, the kick pedal will not return completely or at all, and the kick gear and ratchet gear will stay partially meshed, making noise while the engine is running. Kick mechanism noise may also result when the kick gear bushing, or kick shaft becomes worn.

Kickstarter

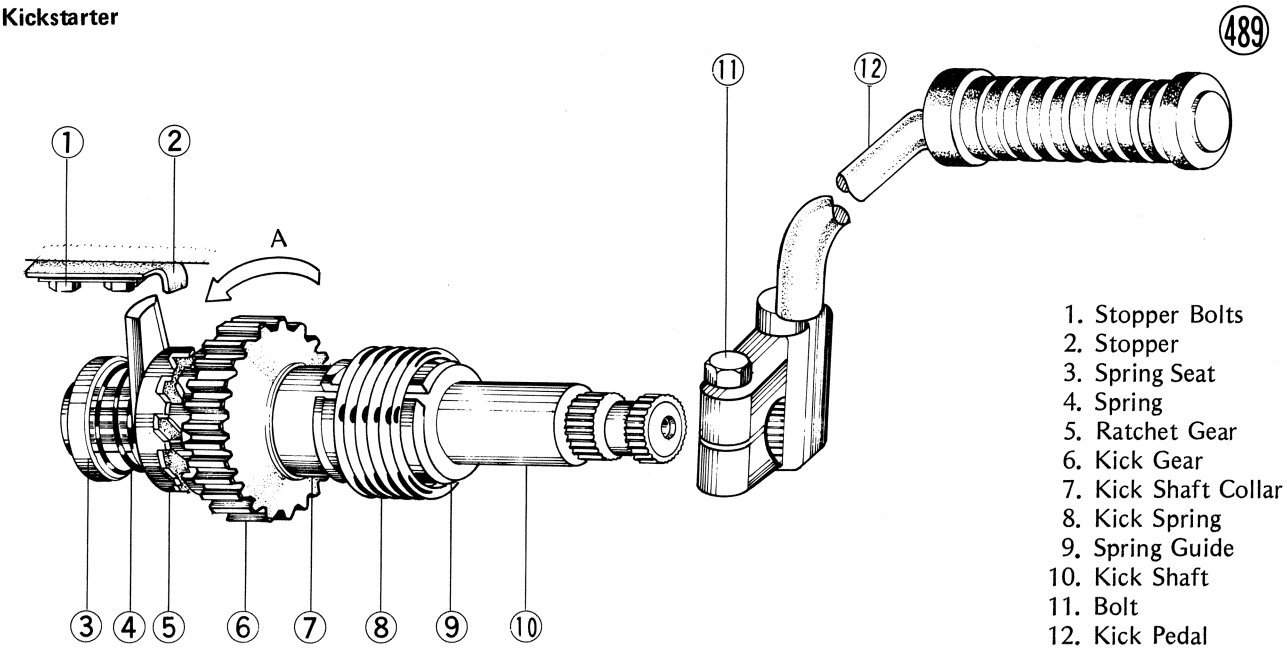

1. Stopper Bolts
2. Stopper
3. Spring Seat
4. Spring
5. Ratchet Gear
6. Kick Gear
7. Kick Shaft Collar
8. Kick Spring
9. Spring Guide
10. Kick Shaft
11. Bolt
12. Kick Pedal

If the ratchet gear or ratchet on the kick gear is worn or damaged, the kick gear will slip, and it will not be possible to kickstart the engine.

Kick gear, shaft wear

Measure the inside diameter of the kick gear, and replace the gear if the diameter is over the service limit. Visually inspect the ratchet portion of the kick gear. If there is any kind of damage, replace the kick gear.

Measure the kick shaft diameter at the kick gear, and replace it if it is under the service limit.

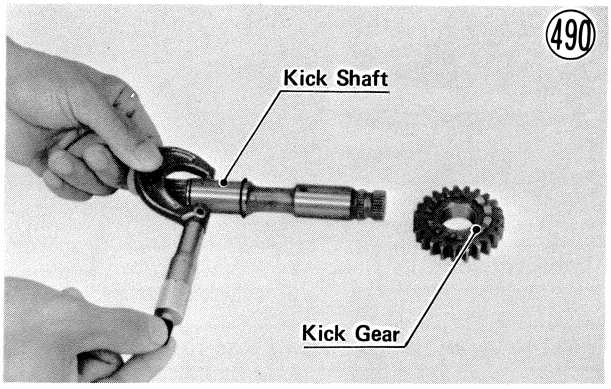

Table 74 Kick Gear Inside Diameter

Standard	Service Limit
21.979~22.000 mm	22.05 mm

Table 75 Kick Shaft Diameter at Kick Gear

Standard	Service Limit
21.939~21.960 mm	21.92 mm

ENGINE LUBRICATION

The engine lubrication system includes the oil screen, engine oil pump, oil filter, oil pressure relief valve, and oil passages. An oil pressure indicator switch is provided to warn in case of insufficient oil pressure. An oil breather keeps crankcase pressure variations to a minimum and reduces emmissions by recirculating blowby gas. The discussion here concerns how these parts work together, how the oil reaches the various parts of the engine, and how to check the oil pressure. Details on the engine oil pump, oil filter, and oil breather are given in the sections (Pgs. 145~149) following engine lubrication.

Since the engine lubrication system is the wet sump type, there is always a supply of oil in the crankcase at the bottom of the engine. The oil is drawn through the wire screen into the oil pump as the pump rotors turn. The pump is driven by a gear attached on the left end of the rear balancer shaft. The screen removes any metal particles and other foreign matter which could damage the oil pump. From the pump the oil passes through the oil filter element for filtration. If the element is badly clogged, slowing the flow of oil through it, oil bypasses the element through a bypass valve in the upper crankcase half. After passing through the filter, the oil flows through the crankcase main oil passage to where it branches into two lubrication routes.

One of these routes is to the crankshaft main bearings, then to the connecting rod journals and to the starter motor crankshaft sprocket. The cylinder walls, pistons, and piston pins are lubricated by splash from the spinning crankshaft. The oil then drops and collects at the bottom of the crankcase to be used again.

The other route for filtered oil is through the oil passage at each side of the cylinder block, up to the top of the cylinder head. After lubricating the camshaft journals, the oil flows out over the cams and down

Engine Lubrication System

491

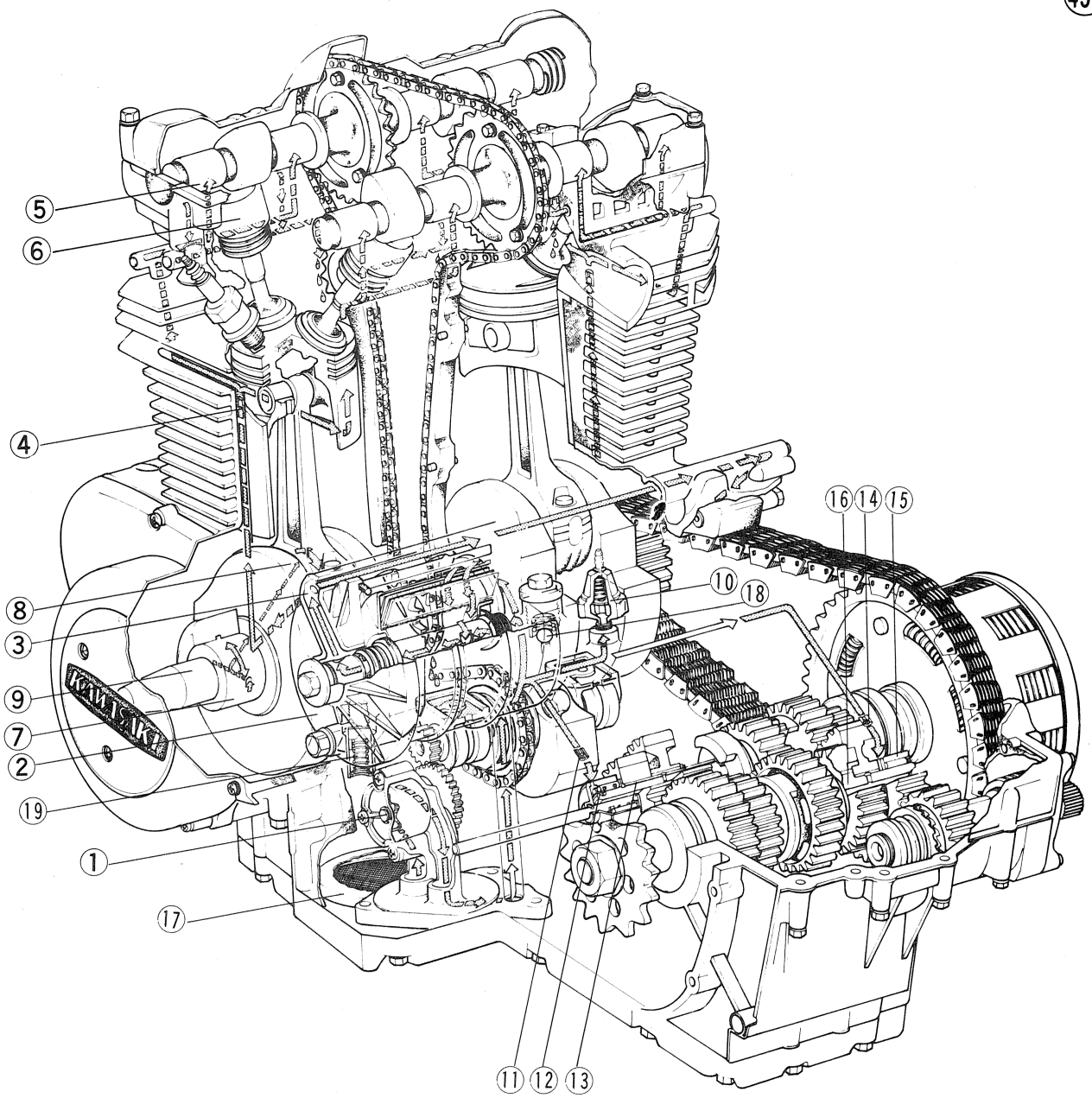

Engine Oil Flow Chart

492

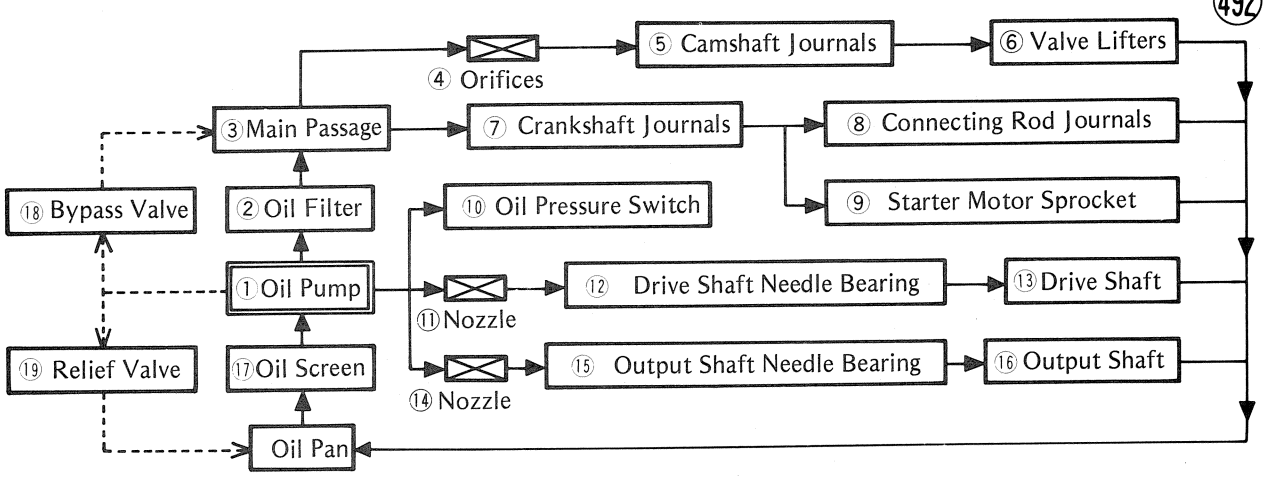

around the valve lifters to lubricate these areas. This oil returns to the sump via the oil return holes at the base of the valve lifters, and via the cam chain opening in the center of the head and cylinder.

The oil pump feeds unfiltered oil directly to the transmission. It exits from the oil passage nozzles at the needle bearings of the drive and output shafts, and drops down into the crankcase after lubricating the bearings and gears.

The balancer mechanism shaft needle bearings are lubricated by spraying oil which lands on the oil receiver recess in the lower crankcase half mating surface. After bearing lubrication the oil drops and collects at the bottom of the crankcase for recirculation.

Both the oil pressure indicator switch and the oil pressure relief valve are important for maintaining a constant oil pressure. The oil pressure indicator switch, mounted on the upper part of the crankcase, checks on the oil pressure in the main oil passage and lights the oil pressure warning light if the pressure falls below a safe level. If the oil pressure is insufficient, the oil pump is overworn or malfunctioning or there is insufficient oil supply to the pump. On the other hand, if the oil pressure becomes excessive, such as when the engine is started (especially in cold weather), the relief valve reduces the oil pressure. The relief valve opens whenever a pressure of 5.2 kg/cm^2 (74 psi) is exerted on the valve spring.

Oil pressure measurement

Warm up the engine. Remove the oil pressure indicator switch from the crankcase, and connect the oil pressure gauge adapter (special tool) in its place. Fit the indicator switch and the oil pressure gauge on the adapter, and start the engine. Run the engine at the specified speed (Table 76), and read the oil pressure gauge.

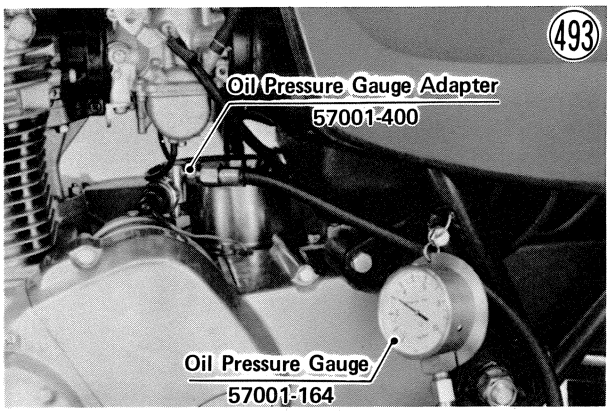

Table 76 Oil Pressure

Oil Pressure @4,000 rpm, 90°C (194°F)
More than 3.4 kg/cm^2 (48 psi)

If the oil pressure is significantly below the standard pressure, inspect the engine oil pump (Pg. 148). If the pump is not at fault, inspect the rest of the lubrication system.

NOTE: Tighten the oil pressure indicator switch with 1.3~1.7 kg-m (9.5~12.0 ft-lbs) of torque.

Oil pressure indicator switch inspection

The switch should turn on the warning light whenever the ignition switch is on with the engine not running.

If the light does not go on, disconnect the switch lead. Connect the positive lead of a 30 VDC range voltmeter to the switch lead and ground the voltmeter negative lead to the engine. Turn the ignition switch to the "ON" position, and read the voltmeter. If the voltmeter does not indicate battery voltage, the trouble is either defective wiring or a burned-out indicator bulb.

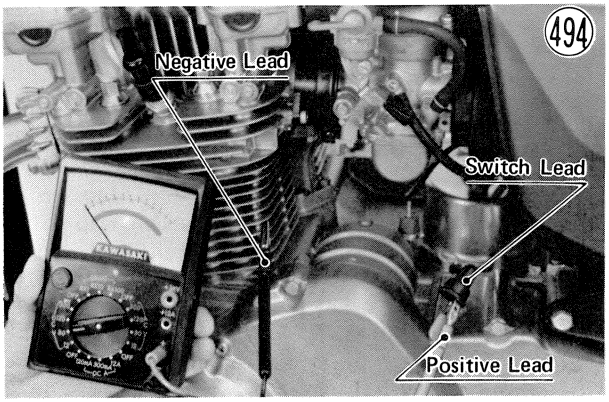

If the voltmeter does indicate battery voltage, then the oil pressure indicator switch may be defective. Use an ohmmeter to check for continuity between the switch terminal and the switch body. With the switch lead disconnected, and the engine stopped, any reading other than zero ohms indicates that the switch is at fault.

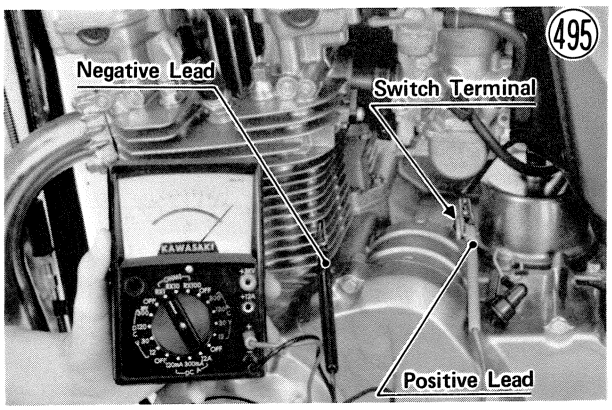

The switch should turn off the warning light whenever the engine is running faster than the specified speed. If the light stays on, stop the engine immediately, disconnect the lead from the switch, and connect the ohmmeter between the switch terminal and the engine (chassis ground). The meter should read zero ohms when the engine is off and infinity when the engine is running above the specified speed (Table 77). If the meter reads zero ohms when the engine is running at the specified speed, stop the engine and measure the oil pressure (Pg. 147). If the oil pressure is more than 0.2 ~0.4 kg/cm^2 (2.8~5.7 psi) with the engine running at the specified speed, the oil pressure indicator switch is defective, and must be replaced.

NOTE: When installing a new switch, tighten it with 1.3~1.7 kg-m (9.5~12.0 ft-lbs) of torque.

Table 77 Oil Pressure Switch Inspection

Meter	Engine Speed	Oil Pressure Switch
R x 1	Stopped	ON (Ohmmeter reads zero ohms)
	More than idling rpm	OFF (Ohmmeter reads infinity)

Relief Valve (piston type)

NOTE: See Pg. 218 for ball type relief valve maintenance.

Relief valve wear

Measure the diameter of the valve piston and the inside diameter of the valve body. The difference between these two values is the piston-to-body clearance. If the clearance exceeds the service limit, replace the valve piston. If the piston and the inside wall of the valve body are scratched, replace the relief valve.

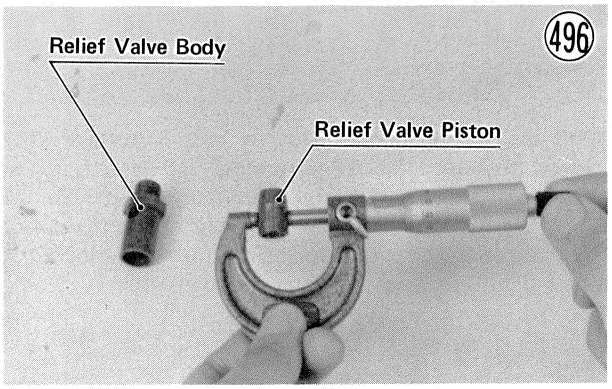

Table 78 Relief Valve Piston/Body Clearance

Standard	Service Limit
0.020~0.103 mm	0.13 mm

Relief valve spring tension

Measure the valve spring free length with vernier calipers. If the length is less than the service limit, replace the spring.

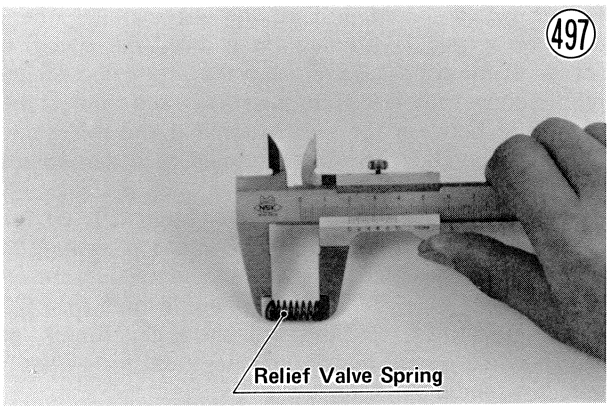

Table 79 Valve Spring Free Length

Standard	Service Limit
20.1 mm	19.1 mm

Engine Oil Pump

The oil pump, installed in the left side of the lower crankcase half, is a simple trochoid type with an outer and an inner rotor. The gear on the pump is driven in direct proportion to engine rpm by a gear attached to the left end of the rear balancer shaft.

If the oil pump becomes worn, it may no longer be able to supply oil to lubricate the engine adequately.

Outer rotor/inner rotor clearance

Measure the clearance between the outer rotor and inner rotor with a thickness gauge. If the clearance exceeds the service limit, replace the rotors.

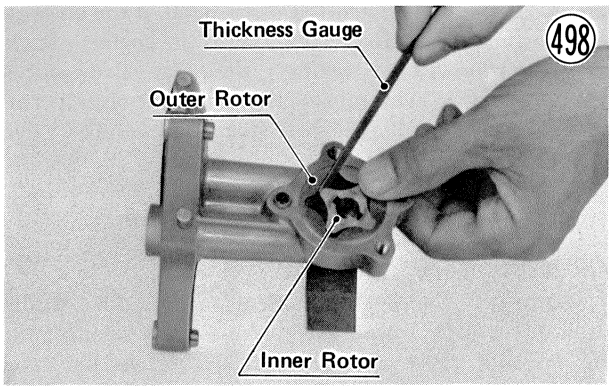

Table 80 Outer Rotor/Inner Rotor Clearance

Standard	Service Limit
0.05~0.23 mm	0.30 mm

Rotor side clearance

Lay a straightedge on the oil pump body, and measure the clearance between the straightedge and the rotors with a thickness gauge. If the clearance exceeds the service limit, replace either the pump body or the rotors depending on which is excessively worn.

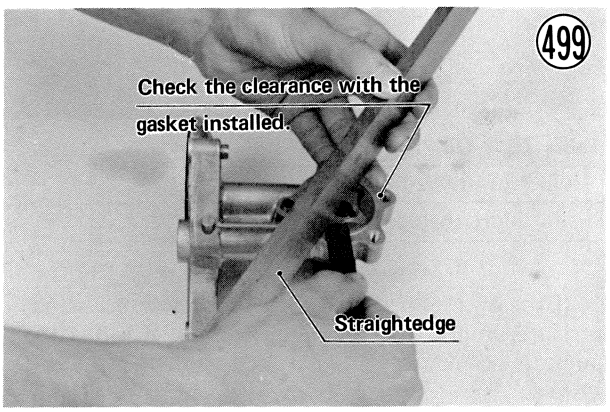

Table 81 Rotor Side Clearance (with cover gasket fitted)

Standard	Service Limit
0.02~0.07 mm	0.12 mm

Outer rotor/pump body clearance

Measure the clearance between the outer rotor and the pump body with a thickness gauge. If the clearance exceeds the service limit, replace either the pump assembly or the rotors. The standard inside diameter for the pump body and outside diameter for the outer rotor are 40.71~40.74 mm and 40.53~40.56 mm.

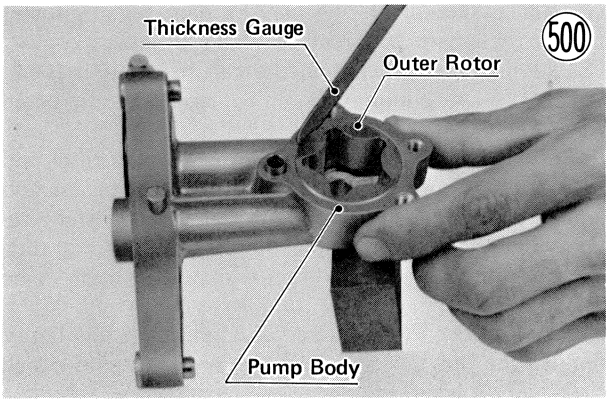

Table 82 Outer Rotor/Pump Body Clearance

Standard	Service Limit
0.15~0.21 mm	0.30 mm

Oil Filter

The oil filter, located in the upper left part of the crankcase, remove impurities from the oil.

As the filter element becomes dirty and clogged, its filtering efficiency is impaired. If it becomes so clogged that it seriously impedes oil flow, a pressure-activated bypass valve in the crankcase opens so that sufficient oil will still reach the parts of the engine needing lubrication. When the filter becomes clogged such that the oil pressure difference between the inlet and outlet for the filter reaches 3.0~4.0 kg/cm^2 (43~57 psi), the oil on the inlet side pushing on the valve spring opens the valve, allowing oil to flow to the main oil passage, bypassing filtration.

Since any metal particles or other foreign matter in the oil reaching the crankshaft and transmission accelerate wear and shorten engine life, the oil filter should never be neglected.

Replace the filter element in accordance with the Periodic Maintenance Chart (Pg. 195) since it becomes clogged with metal filings from the engine and transmission especially during break-in. After break-in, replace the element at every other oil change. When the filter is removed for element replacement, wash the rest of the filter parts in a high flash-point solvent and check the condition of the **O** rings. If they are worn or deteriorated, replace them to avoid oil leakage.

Oil Filter

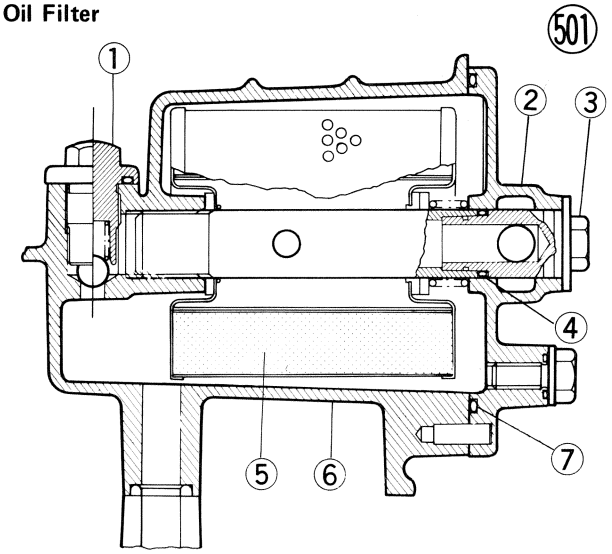

1. Bypass Valve
2. Filter Cover
3. Filter Bolt
4. O Ring
5. Filter Element
6. Filter Body
7. O Ring

Oil Breather

The oil breather is located on the top of the crankcase. The underside of the breather opens to the crankcase, while the upper part connects through the breather hose to the air cleaner. Its function is to minimize crankcase pressure variations caused by crankshaft and piston movement and to recycle blowby gas.

Gas blowby is the combustion chamber gas escaping past the rings into the crankcase. A small amount is unavoidable, but gas blowby increases as cylinder wall and piston ring wear progresses. If not efficiently removed, blowby gas will seriously contaminate the engine oil.

Recycling blowby gas means more efficient combustion, but the oil mist resulting from transmission gear movement must first be removed. The mixture of blowby gas and oil mist passes through a maze in the breather, which separates most of the oil from the gas. The oil which is separated from the gas returns to the bottom of the crankcase. The gas is drawn through the breather hose into the air cleaner housing, and is drawn through the carburetors into the engine.

If the breather hose or the parts inside the breather become clogged, pressure may build up in the crankcase and cause oil leaks.

NOTE: If the engine is overfilled with engine oil, mist from the excess oil will go through the oil breather to clog the air cleaner and cause carburetion trouble. This is not the fault of the oil breather.

ENGINE OIL SEALS

The engine oil seals are listed in Table 83. The crankshaft oil seal in the right engine cover forms a seal between the crank chamber and the contact breaker point cavity. If this seal is damaged, oil will leak into the contact breaker point cavity, and foul the contact breaker points. Any damaged, hardened, or otherwise defective oil seal will allow oil to leak.

Table 83 Engine Oil Seals

Crankshaft	Clutch Push Rod	Output Shaft	Shift Shaft	Kick Shaft
AJ254007	AK071807	AJ325211	AJ13225.5	AJ22325.5

Oil seal damage

Inspect the oil seals, and replace any if the lips are misshapen, discolored (indicating the rubber has deteriorated), hardened, or otherwise damaged. Since an oil seal is nearly always damaged on removal, any removed oil seals must be replaced. When pressing in an oil seal which is marked, press it in with the mark facing out. Press the seal in so that the face of the seal is level with the surface of its hole.

FUEL TANK

The fuel tank capacity is 14.5 liters, 2 liters of which form the reserve supply. A cap is attached to the top of the tank, and a fuel tap to the bottom. An air vent is provided in the cap to prevent an air lock, which would hinder fuel flow to the carburetors.

Fuel tap construction is shown in Fig. 502. The fuel tap has three positions: off, on, and reserve. With the tap in the "off" position, no fuel will flow through the tap; with the tap in the "on" position, fuel flows through the tap by way of the main pipe until only the reserve supply is left in the tank; with the tap in the "reserve" position, fuel flows through the tap from the bottom of the tank. The fuel tap contains a filter and a sediment cup to filter out dirt and collect water.

Fuel Tap

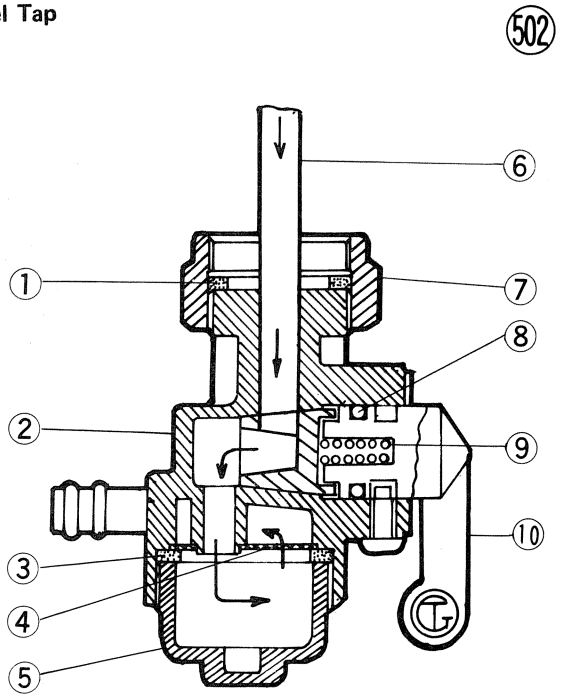

1. Gasket
2. Body
3. Gasket
4. Filter
5. Sediment Cup
6. Main Pipe
7. Fuel Tap Nut
8. O Ring
9. Spring
10. Lever

Inspection and cleaning

If fuel leaks from the cap or from around the fuel tap, the gasket or **O** ring may be damaged. Visually inspect these parts, and replace them if necessary.

Examine the air vent in the cap to see if it is obstructed. Use compressed air to clear an obstructed vent.

Periodically inspect and clean the fuel tap filter and the sediment cup, using a high flash-point solvent and a fine brush. If the filter is damaged, it must be replaced. If the sediment cup contains much water or dirt, the fuel tank and the carburetor may also need to be cleaned.

To clean out the fuel tank, disconnect the fuel hoses, remove the fuel tap, and flush out the tank with a high flash-point solvent.

To drain the carburetor float bowls, remove the plug at the bottom of each carburetor. For thorough cleaning, remove and disassemble the carburetors (Pg. 33).

WHEELS

Wheel construction is shown in Fig. 503 and 504. The following sections, Pgs. 150~155, cover the tires, rims and spokes, axles, grease seals, and wheel bearings. For the brakes, see Pgs. 157~163.

TIRES

The tires are designed to provide good traction and power transmission during acceleration and braking even on bad surfaces. To do this, they must be inflated to the correct pressure and not overloaded. The maximum recommended load, in addition to vehicle weight, 165 kg.

If the tires are inflated to too high a pressure, riding becomes rough, the center portion of the tread wears quickly, and the tires are easily damaged.

If inflation pressure is too low, the shoulder portions wear quickly, the cord suffers damage, fuel consumption is high, and handling is poor. In addition, heat builds up at high speeds, and tire life is greatly shortened.

To ensure safe handling and stability, use only the recommended standard tires for replacement, inflating them to the standard pressure. A certain variation from the standard pressure may be desired depending on road surface conditions (rain, ice, rough surface, etc.).

Front Wheel

503

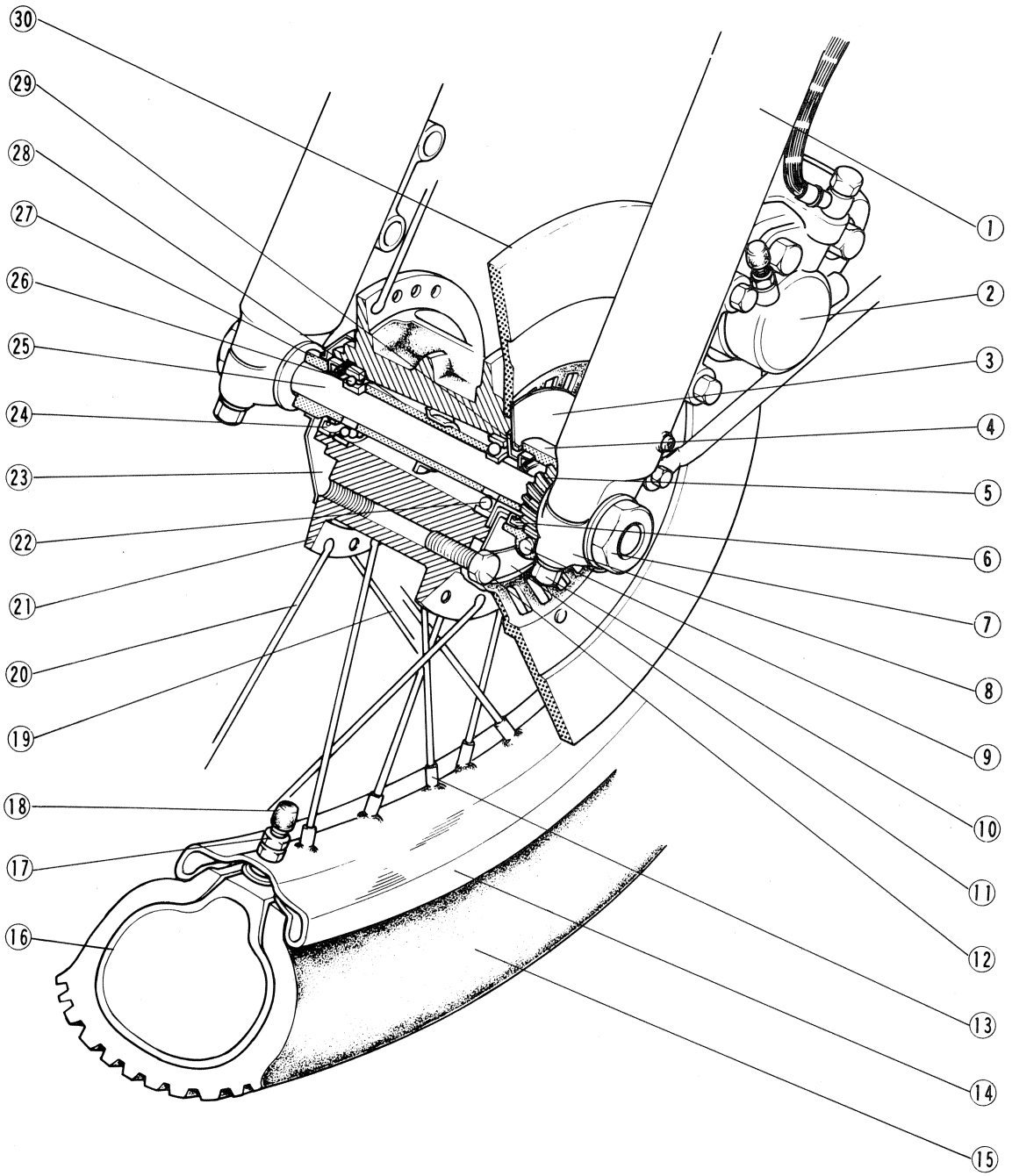

1. Fork Leg
2. Caliper
3. Speedometer Gear Drive Holding Plate
4. Speedometer Gear Housing
5. Speedometer Gear
6. Grease Seal
7. Axle Nut
8. Axle Clamp
9. Speedometer Pinion
10. Clamp Nut
11. Double Washer
12. Disc Mounting Bolt
13. Spoke Nipple
14. Rim
15. Tire
16. Tube
17. Locknut
18. Valve Stem Cap
19. Outer Spoke
20. Inner Spoke
21. Front Hub
22. Wheel Bearing
23. Cap
24. Grease Seal
25. Front Axle
26. Wheel Bearing
27. Collar
28. Distance Collar
29. Speedometer Gear Drive
30. Disc

Rear Wheel

504

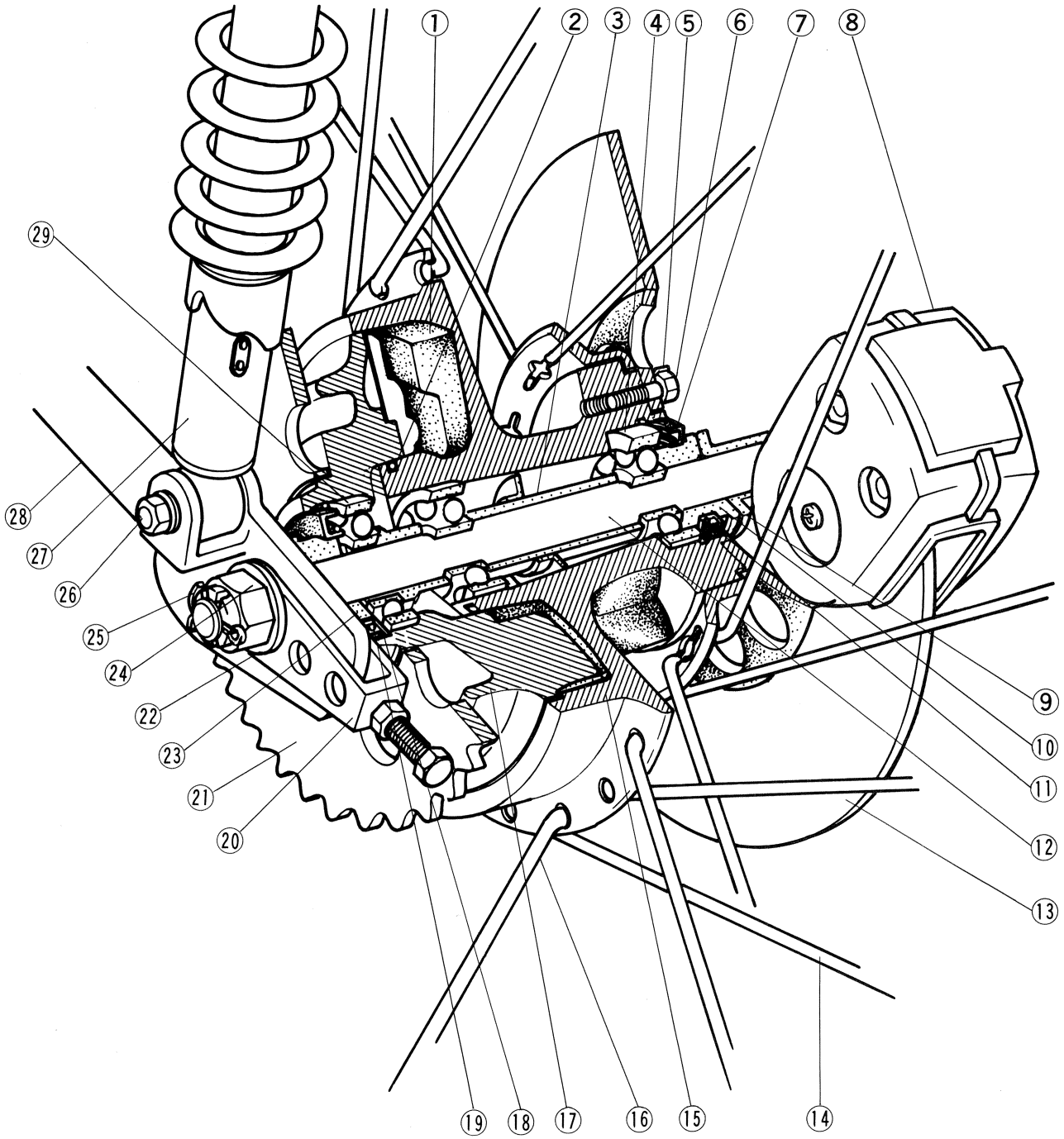

1. Rubber Damper
2. O Ring
3. Distance Collar
4. Ball Bearing
5. Double Washer
6. Disc Mounting Bolt
7. Grease Seal
8. Caliper Assembly
9. Rear Caliper Holder Sleeve
10. Collar
11. Circlip
12. Rear Axle
13. Disc
14. Inner Spoke
15. Rear Hub
16. Outer Spoke
17. Wheel Coupling
18. Circlip
19. Grease Seal
20. Chain Adjuster
21. Rear Sprocket
22. Washer
23. Coupling Collar
24. Axle Nut
25. Cotter Pin
26. Rear Shock Absorber Mounting Nut
27. Rear Shock Absorber
28. Swing Arm
29. Ball Bearing

Table 84 Tires, Air Pressure (measured when cold)

	Air pressure		Size	Make, Type
Front	2.00 kg/cm² (28 psi)		3.25H19 4PR	BRIDGESTONE SUPER SPEED-21F2
Rear	up to 97.5 kg	2.25 kg/cm² (32 psi)	4.00H18 4PR	BRIDGESTONE SUPER SPEED-21R2
	97.5~ 165 kg	2.50 kg/cm² (36 psi)		

Bead protectors are provided on the rear wheel to keep the tire from slipping on the rim and damaging the tube when extreme braking or driving forces are applied.

Tire wear, damage

Tires must not be used if they are getting bald, or if they are cut or otherwise damaged. As the tire tread wears down, the tire becomes more susceptible to puncture and failure. 90% of tire failures occur during the last 10% of tire life.

Visually inspect the tire for cracks and cuts, replacing the tire in case of bad damage. Remove any imbedded stones or other foreign particles from the tread. Swelling or high spots indicate internal damage, requiring tire replacement unless the damage to the fabric is very minor.

Measure the depth of the tread with a depth gauge, and replace the tire if tread depth is less than the service limit.

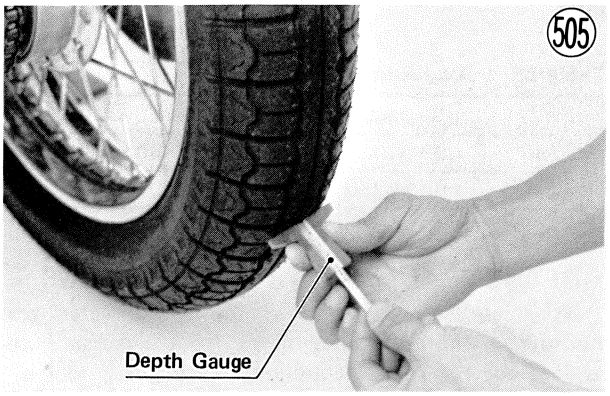

Table 85 Tire Tread Depth

Tire	Standard	Service Limit	
		Normal Speed	over 130 kph
Front	3.4 mm	1 mm	1 mm
Rear	6.7 mm	2 mm	3 mm

RIM AND SPOKES

The rim of each wheel is made of steel and is connected to the hub by the spokes. A rim band around the outside center of the rim keeps the tube from coming into direct contact with the rim and the spoke nipples.

The spokes are connected to the hub at tangents and in different directions so that different spokes bear the brunt of the load under different conditions. With the spokes doing specialized work, the strength of the spokes can be used more effectively.

When the motorcycle is at rest (Fig. 506A), the spokes above the axle are stretched and tense, while the spokes below the axle are slightly loose and do not provide support. During acceleration (B), the spokes running to the hub in the direction of rotation are stretched, while during deceleration or braking (C), the spokes running to the hub opposite to the direction of rotation are the ones that are stretched. In both cases B and C, the spokes that are not stretched (omitted from the diagram) are slightly loose and do not provide support. A damping of road shock is achieved by flexing of the spokes since they are arranged in this cross pattern instead of running straight from the hub to the rim.

Since the spokes must withstand this repeated stress, it is important to take sufficient care that the spokes are not allowed to loosen and that they are tightened evenly. Loose or unevenly tightened spokes cause the rim to warp, increase the possibility of spoke breakage, and hasten nipple and spoke metal fatigue.

NOTE: The rim size shown in Table 86 is the outer width and diameter, both in inches. The spoke size is diameter number by length in milimeters. The two numbers for diameter size mean that each spoke has two diameters. To make the spoke more resistant to breakage the diameter is greater near the hub.

Spoke Force

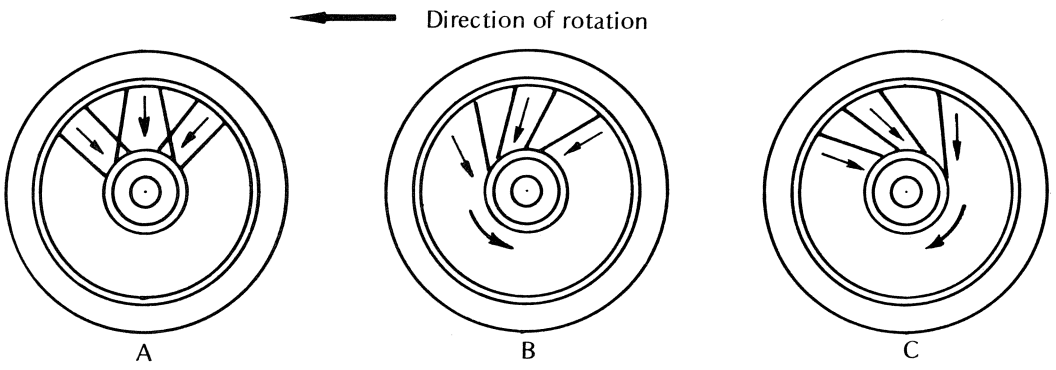

Table 86 Rim, Spokes Size

	Spokes				Rim
	Inner		Outer		
	Left	Right	Left	Right	
Front	#8 x #9 x 184.5 x 97°		#8 x #9 x 184.0 x 83.5°		1.85 x 19
Rear	#8 x #9 x 144.0 x 100.5°	#8 x #9 x 167.5 x 83°	#8 x #9 x 143.5 x 80°	#8 x #9 x 167.5 x 91°	2.15B x 18

Spoke breakage

If any spoke breaks, it should be replaced immediately. A missing spoke places an additional load on the other spokes, which will eventually cause other spokes to break.

Periodically check that all the spokes are tightened evenly since they stretch a certain amount during use. Standard spoke tightening torque is 0.20 ~ 0.40 kg-m (17 ~ 35 in-lbs). Over-or under-tightening may cause breakage.

Rim runout

Set a dial gauge against the side of the rim, and rotate the wheel to measure axial runout. The difference between the highest and lowest dial readings is the amount of runout.

Set the dial gauge to the inner circumference of the rim, and rotate the wheel to measure radial runout. The difference between the highest and lowest dial readings is the amount of runout.

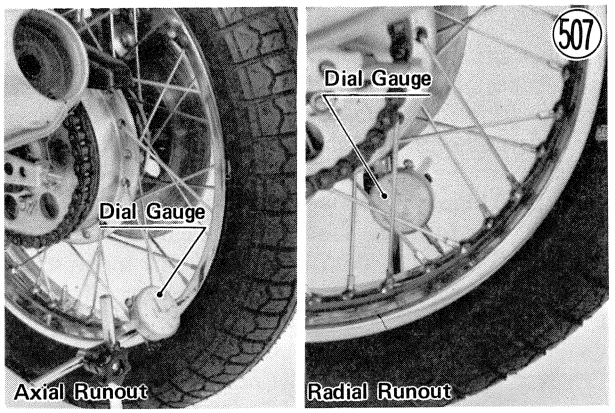

Table 87 Rim Runout

	Standard	Service Limit
Axial	under 0.8 mm	2 mm
Radial	under 1 mm	2 mm

A certain amount of rim warp (runout) can be corrected by recentering the rim. Loosen some spokes and tighten others to change the position of different parts of the rim. If the rim is badly bent, however, it should be replaced.

AXLE

A bent axle causes vibration, poor handling, and instability.

To measure axle runout, remove the axle, place it in V blocks that are 100 mm apart, and set a dial gauge to the axle at a point halfway between the blocks. Turn the axle to measure the runout. The amount of runout is the amount of dial variation.

If runout exceeds the service limit, straighten the axle or replace it. If the axle cannot be straightened to within tolerance, or if runout exceeds 0.7 mm, replace the axle.

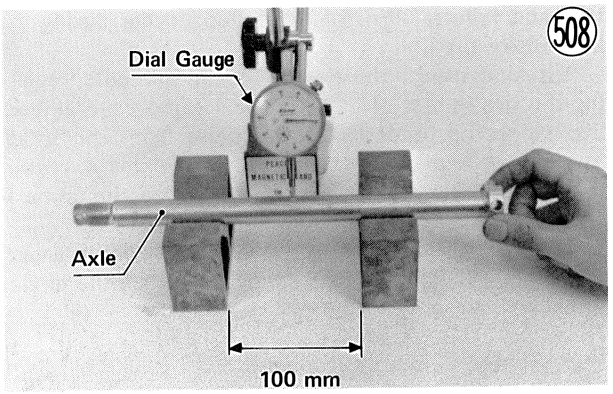

Table 88 Axle Runout/100 mm

	Standard	Service Limit
Front	under 0.1 mm	0.2 mm
Rear	under 0.05 mm	0.2 mm

GREASE SEALS AND WHEEL BEARINGS

A grease seal is fitted in the speedometer gear housing, in the right sides of the front and rear hubs, and in the rear wheel coupling. Each grease seal is a rubber ring equipped with a steel band on its outer circumference. The grease seal inner lip is held against the axle collar by a wire spring band. Since the grease seal not only seals in the wheel bearing grease but also keeps dirt and moisture from entering the hub, the use of a damaged grease seal will cause the wheel bearing to wear quickly.

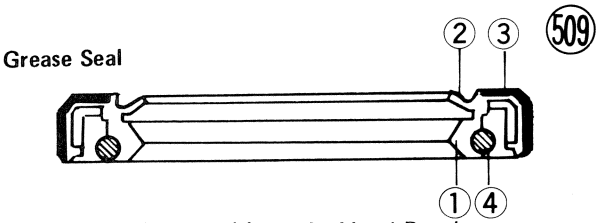

1. Primary Lip
2. Secondary Lip
3. Metal Band
4. Wire Spring Band

A wheel bearing is fitted in both sides of each hub. Since worn wheel bearings will cause play in the wheel, vibration, and instability, they should be cleaned, inspected, and greased periodically.

Inspection and lubrication

If the grease seals are examined without removing the seals themselves, look for discoloration (indicating the rubber has deteriorated), hardening, damage to the internal ribbing, or other damage. If the seal or internal ribbing has hardened, the clearance between the seal and the axle sleeve will not be taken up, which will allow dirt and moisture to enter and reach the bearing. If in doubt as to its condition and whenever the seal is removed for greasing the bearing, the seal should be replaced. The seals are generally damaged upon removal.

Since the wheel bearings are made to extremely close tolerances, the clearance cannot normally be measured. Wash the bearing with a high flash-point solvent, dry it (do not spin it while it is dry), and oil it. Spin it by hand to check its condition. If it is noisy, does not spin smoothly, or has any rough spots, it must be replaced. If the same bearing is to be used again, re-wash it with a high flash-point solvent, dry it, and pack it with good quality bearing grease before installation. Turn the bearing around by hand a few times to make sure the grease is distributed uniformly inside the bearing, and wipe the old grease out of the hub before bearing installation. Clean and grease the wheel bearings and the front hub gear box (speedometer gear) in accordance with the Periodic Maintenance Chart (Pg. 195).

REAR WHEEL COUPLING

The rear wheel coupling connects the rear sprocket to the wheel. Rubber shock dampers in the coupling absorb some of the shock resulting from sudden changes in torque due to acceleration or braking.

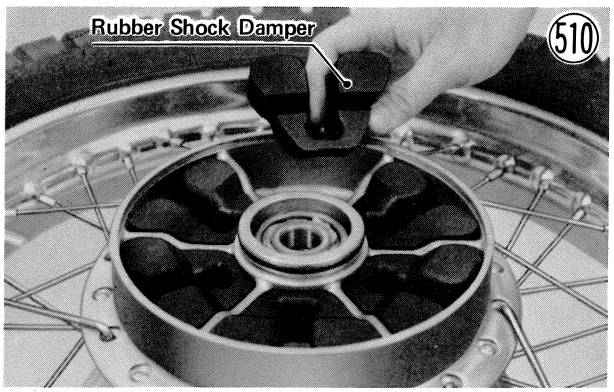

Damper inspection

Remove the rear wheel coupling (Pg. 88), and inspect the rubber dampers.

Replace the dampers if any appear damaged or deteriorated.

DRIVE CHAIN

The drive chain is an "endless" type in which the weakest link, the master link has been eliminated by constructing the chain in a closed loop. To preserve chain strength and reliability, never cut the chain to install it; follow the replacement procedure given in the "Disassembly" section of this manual. When chain replacement is necessary, use only the standard chain (Table 89) for replacement, since only this chain has been especially designed to withstand the extremely high torque developed by the engine.

Table 89 Standard Chain

Make	Type	Link
Enuma	EK530SH-T2G	106 link

Chain construction is shown in Fig. 511. Most chain wear occurs between the pins and bushings, and between the bushings and rollers, rather than on the outside of the rollers. This wear causes the chain to lengthen. If the chain is left unadjusted, the lengthening will lead to noise, excessive wear, breakage, and disengagement from the sprockets. If the chain is allowed to wear too much, the distance from roller to roller is so much greater than the distance between each tooth of the sprocket that the wear to the chain and the sprocket rapidly accelerates.

The rate of wear can be greatly reduced, however, by frequent and adequate lubrication, especially between the side plates of the links so that oil can reach the pins and bushings inside the rollers.

Wear

When the chain has worn so much that it is more than 2% longer than when new, it is no longer safe for use and should be replaced. Whenever the chain is replaced, inspect both the engine and rear sprockets, and replace them if necessary. Overworn sprockets will cause a new chain to wear quickly. See page 156 ("sprockets" section).

Since it is impractical to measure the entire length of the chain, determine the degree of wear by measuring a 20-link length of the chain. Stretch the chain taut either by using the chain adjuster, or by hanging a 10 kg weight on the chain. Measure the length of 20 links on to pin center of the 21st pin. Since the chain may wear unevenly, take measurements at several places. If any measurement exceeds the service limit, replace the chain.

Table 90 Grease Seals, Wheel Bearings

	Front Wheel			Rear Wheel		
	Hub Left	Hub Right	Speedometer Gear Housing	Coupling	Hub Left	Hub Right
Grease Seal	———	PJA254008	PJA304208	AJ406207	———	PJA355207
Bearing	#6203	#6203	———	#6206	#6304	#6304

Drive Chain

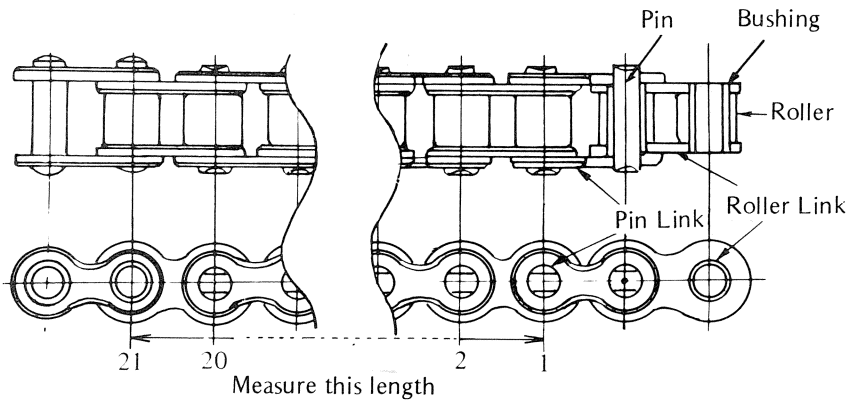

511

NOTE: The drive system was designed for use with the standard chain. For maximum strength and safety, the standard chain must be used for replacement.

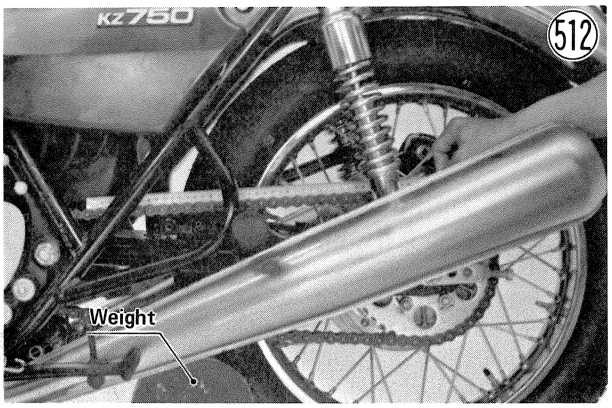

512

Table 91 Drive Chain 20-link Length

Standard	Service Limit
317.5~318.1 mm	323 mm

Lubrication

In order for the chain to function safely and wear slowly, it should be properly lubricated in accordance with the Periodic Maintenance Chart (Pg. 195). Lubrication is also necessary after riding through rain or on wet roads, or any time that the chain appears dry. Anytime that the motorcycle has been washed, the chain should be adequately lubricated on the spot in order to avoid rust.

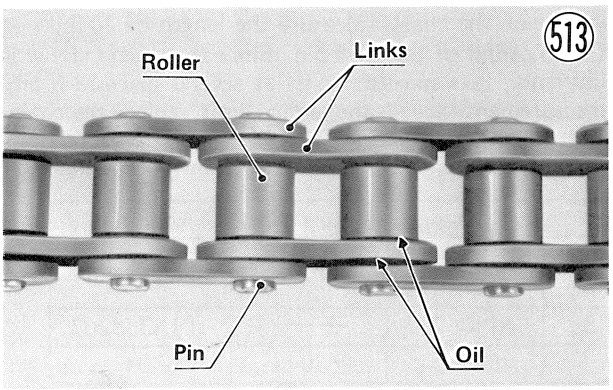

513

The chain should be lubricated with a lubricant which will both prevent the exterior from rusting and also absorb shock and reduce friction in the interior of the chain. An effective, good quality lubricant specially formulated for chains is best for regular chain lubrication. If a special lubricant is not available, a heavy oil such as SAE 90 is preferred to a lighter oil because it will stay on the chain longer and provide better lubrication. Apply the oil to the sides of the rollers and between the side plates of the links so that oil will penetrate to the pins and bushings where most wear takes place. Wipe off any excess oil.

Dirt will cling to the oil and act as an abrasive, accelerating chain wear. Whenever the chain becomes particularly dirty, it must be cleaned in kerosene and then soaked in a heavy oil. Shake the chain while it is in the oil so that oil will penetrate to the inside of the rollers.

SPROCKETS

There are two sprockets for the drive chain. A forward sprocket, or engine sprocket, is mounted on the end of the output shaft and is used to drive the chain. A rear sprocket is connected to the rear wheel hub through the rear wheel coupling and is driven by the chain to turn the rear wheel.

Sprockets that have become excessively worn cause chain noise and greatly accelerate chain and sprocket wear. The sprockets should be checked for wear any time that the chain is replaced. A warped rear sprocket destroys chain alignment such that the chain may break or jump from the sprockets when traveling at high speed. The sprockets should be checked for wear and the rear sprocket for warp any time the chain is replaced.

Sprocket wear

Visually inspect the sprocket teeth. If they are worn as illustrated, replace the sprocket.

Measure the diameter of the sprocket at the base of the teeth. If the sprocket is worn down to less than the service limit, replace the sprocket.

NOTE: If a sprocket requires replacement, the chain is probably worn also. Upon replacing a sprocket, inspect the chain.

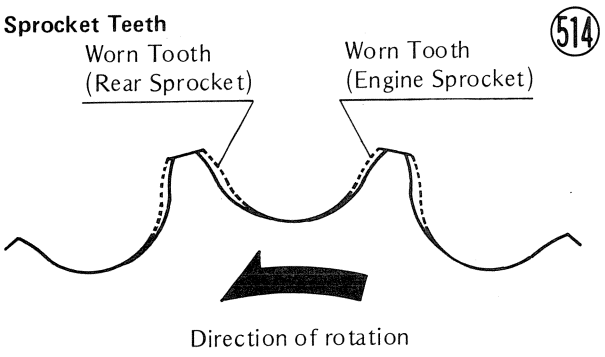

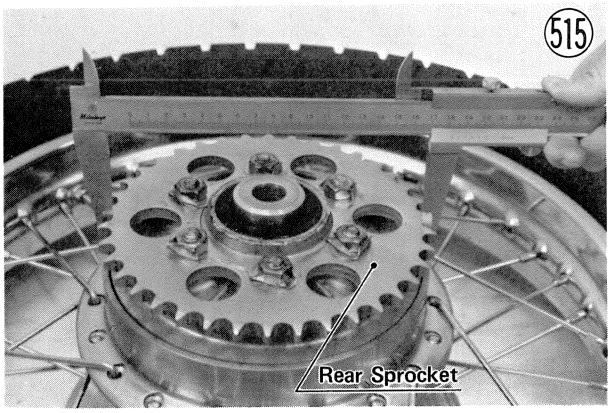

***Table 92 Sprocket Diameter**

	Standard	Service Limit
Engine	71.01~71.21 mm	70.2 mm
Rear	182.08 mm	181.5 mm

Rear sprocket warp

Elevate the rear wheel so that it will turn freely, and set a dial gauge against the rear sprocket near the teeth as shown in Fig. 516. Rotate the rear wheel. The difference between the highest and lowest dial gauge readings is the amount of runout (warp).

If the runout exceeds the service limit, replace the rear sprocket.

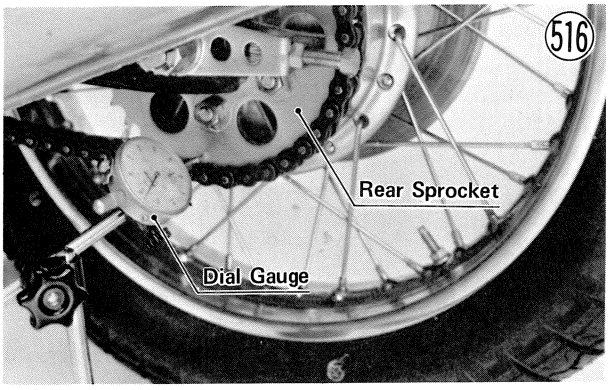

Table 93 Rear Sprocket Warp

Standard	Service Limit
under 0.3 mm	0.5 mm

DISC BRAKES

A hydraulic disc brake is used on each wheel for superior braking performance and high reliability. The major components of each disc brake are the brake lever (front) or the brake pedal (rear), master cylinder, brake line, caliper assembly, and disc. The brake lever is pulled or the brake pedal is pushed to move a piston in the master cylinder and pressurize the brake fluid. Fluid pressure is transmitted through the brake line to operate the caliper. The caliper grips the disc attached to the wheel, slowing wheel rotation. Front fluid pressure operates the front brake light switch, and the rear brake pedal pulls the rear brake light switch. Each switch turns on the brake light.

The brake fluid is an extra heavy duty type with a high boiling point to withstand the heat produced by friction of the caliper pads on the disc. Since the boiling point and thus the performance of the fluid would be reduced by contamination with water vapor or dirt from the air, the reservoir is sealed with a rubber diaphragm under the cap. This cap seal also prevents fluid evaporation and spillage should the motorcycle fall over. The fluid is further protected by rubber seals in the caliper assembly and at the master cylinder brake line fitting.

Each master cylinder assembly includes the reservoir, piston, primary and secondary cups, non-return valve, check valve (only on front), and spring. The reservoir has two holes at the bottom: a relatively large supply port to supply fluid to the lines and a small relief port to admit excess fluid from the line. The primary and secondary cups stop the fluid from leaking back around the piston while the piston is moving forward to pressurize the line. The check valve stops fluid from suddenly returning from the brake line when the lever is released, and thereby smooths brake operation. The non-return valve is in the head of the piston; it stops backward fluid flow when the brake is applied. When the brake lever or pedal is released, the valve allows flow around the cup to fill the vacuum in front of the piston so that the piston can return easily.

Each caliper assembly includes pad A, pad B, and the piston, which is inside the caliper cylinder. Through each caliper run two shafts, which also pass through the caliper holder to mount the assembly to the left front fork or the rear axle. When the piston forces pad A against the disc, the shaft portion of the caliper assembly slides through the holder such that pad B is also forced against the disc, both brake pads being kept paralled to the disc.

Unlike a drum-type brake, the components of the disc brake which perform the actual braking action, i.e., the disc and pads, are open to direct contact with the air flow past the motorcycle. This provides for excellent dissipation of the heat from brake friction, and minimizes the possibility of brake fade common to drum brakes.

Automatic Wear Adjustment

When fluid pressure develops in the cylinder, the piston is pushed exerting pressure against the brake pad, which in turn presses against the brake disc. The

Master Cylinders

517

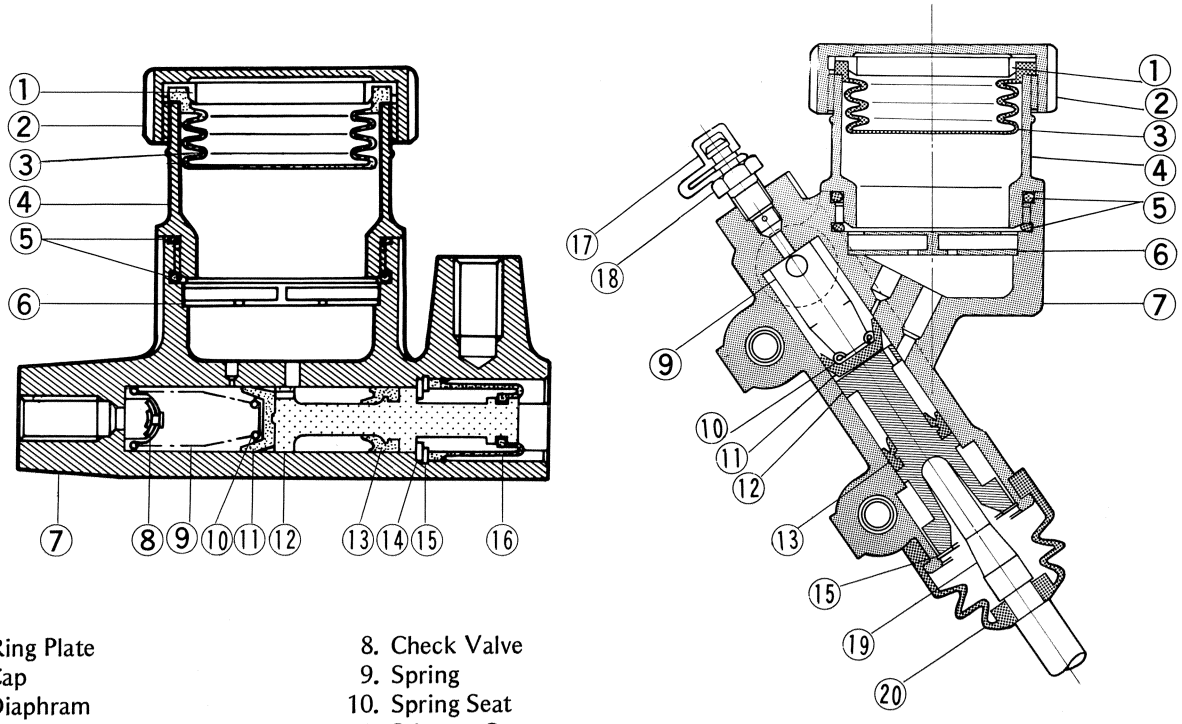

1. Ring Plate
2. Cap
3. Diaphram
4. Reservoir
5. O Rings
6. Plate
7. Master Cylinder Body
8. Check Valve
9. Spring
10. Spring Seat
11. Primary Cup
12. Piston
13. Secondary Cup
14. Piston Stopper
15. Retaining Ring
16. Dust Seal
17. Bleed Valve Cap
18. Bleed Valve
19. Push Rod
20. Dust Cover

Caliper

518

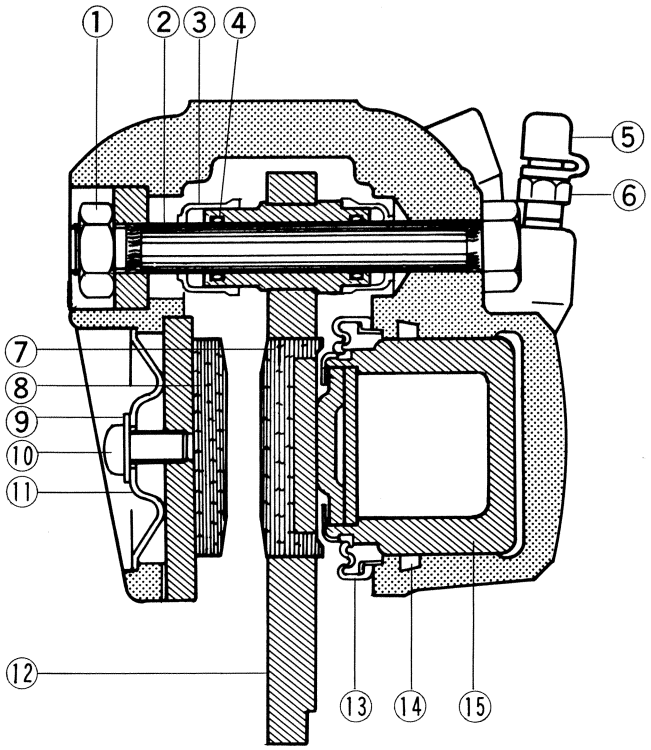

1. Nut
2. Caliper Holder Shaft
3. Dust Cover
4. O Ring
5. Bleed Valve Cap
6. Bleed Valve
7. Pad A
8. Pad B
9. Lock Washer
10. Screw
11. Metal Plate
12. Caliper Holder
13. Dust Seal
14. Fluid Seal
15. Piston

pressurized fluid is prevented from leaking by a fluid seal fitted into the cylinder wall. The seal is pressed, against the piston, and instead of sliding when the piston moves, the seal is only distorted, allowing no fluid leakage at all. When the brake lever or pedal is released and fluid pressure lowers, the elasticity of the seal returns the piston to its original position. After the brakes are used for a while and the pads wear slightly, the rubber seal will no longer be able to distort the additional amount that the piston travels. Instead, when piston travel forces the seal past its limit, the seal slips on the piston. The seal then returns the piston to a new rest position that is closer to the disc.

A small amount of fluid from the reservoir supplements the fluid in the brake line to compensate for the difference in piston position. Consequently, the length of the brake lever or pedal stroke remains unchanged, and the brake never needs adjustment.

The seal and the cup at the head of the master cylinder piston are made of special heat resistant rubber for best performance and to prevent deterioration. For this reason, only standard parts should be used.

Braking Stroke

When the brake lever is pulled or the pedal is pushed, the piston ⑩ in the master cylinder is pushed and moves forward against the force of the return spring ⑦. At this time, the primary cup ⑨ at the head of the piston closes the small relief port ④, which connects the pressure chamber ⑧ and the reservoir ⑥. Until this port is fully closed, the brake fluid does not start being pressurized, in spite of the forward movement of the piston.

The pressure stroke starts as soon as the relief port is closed. The piston compresses the brake fluid, which is being used as the pressure medium, forcing it through the check valve ③ (only on front) and out into the brake line. The pressure is transmitted through the line to the cylinder portion of the caliper assembly, where it forces the piston towards the disc. The piston presses pad A against the disc, but since the disc is immovable, further pressure cannot move the pad any farther. Instead, the entire caliper assembly moves in the opposite direction such that pad B is also forced against the disc. In this manner, the disc is gripped between the two pads, and the resulting friction slows wheel rotation.

Braking Release Stroke

When the brake lever or pedal is released, the piston in the master cylinder is quickly returned toward its rest position by the spring ⑦, and brake fluid pressure drops in the line and in the caliper cylinder. The elasticity of the fluid seal ① in the cylinder then returns the piston. This leaves no pressure against either pad A or B so that slight friction against the disc pushes them both slightly away from the disc.

As the master cylinder piston moves back further, the brake fluid in the line rushes to fill the low pressure area in front of the primary cup at the piston head. But the fluid is prevented from moving quickly by the check valve (only on front), and the low pressure area in front of the piston is not relieved. At this time, fluid from the reservoir flows through the large supply port ⑤ into the space between the primary and secondary cups, through the non-return valve, and passes around the edges of the primary cup to fill the vacuum. When the piston has returned to its rest position against the stopper, the small relief port is uncovered. As the brake fluid returns from the line through the check valve (only on front), excess fluid passes through the relief port into the reservoir until the brake line pressure returns to zero.

Braking Stroke

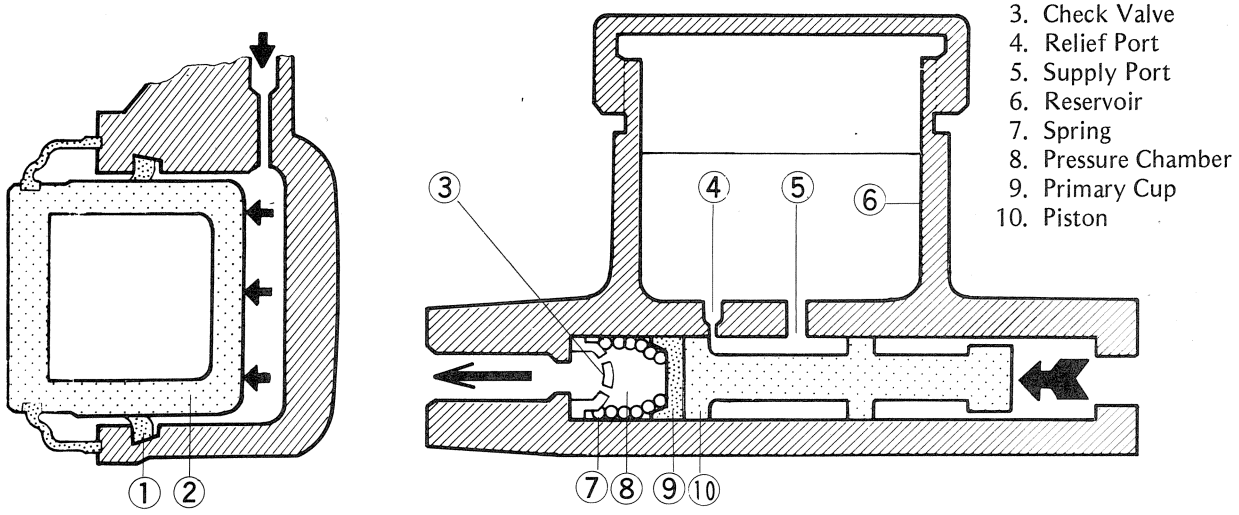

Braking Release Stroke

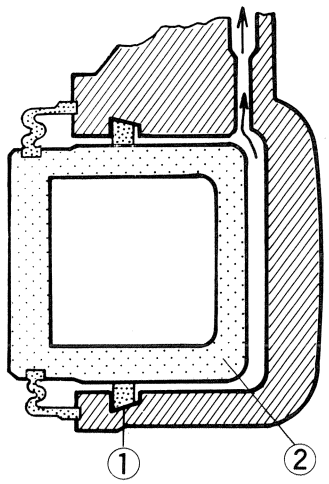

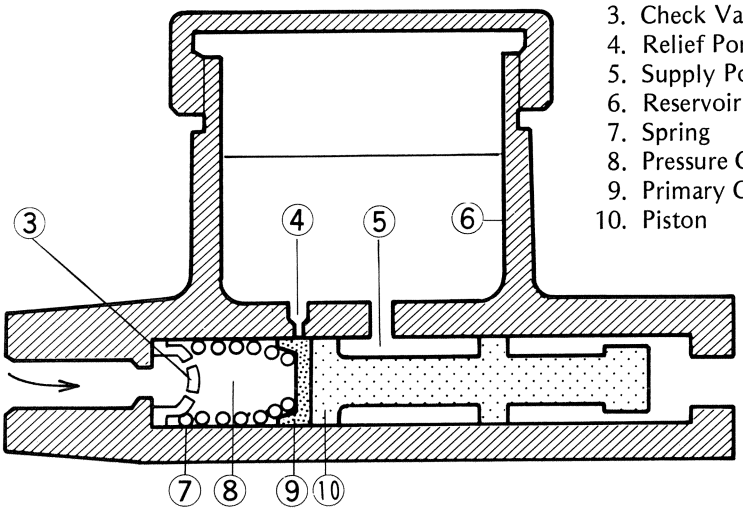

1. Fluid Seal
2. Piston
3. Check Valve
4. Relief Port
5. Supply Port
6. Reservoir
7. Spring
8. Pressure Chamber
9. Primary Cup
10. Piston

520

Brake Fluid

When the brake is applied, heat is generated by the friction between the disc and the brake pads. While much of this heat is immediately dissipated, some of it is transmitted to the brake fluid and may raise fluid temperature to as high as 150°C (300°F) during brake operation. This temperature could boil the brake fluid and cause a vapor lock in the lines unless fluid with a high boiling point is used and has been kept from being contaminated with dirt, moisture, or a different type of fluid. Poor quality or contaminated fluid can also deteriorate from contact with the recommended brake fluids.

Brake Fluid Boiling Point

521

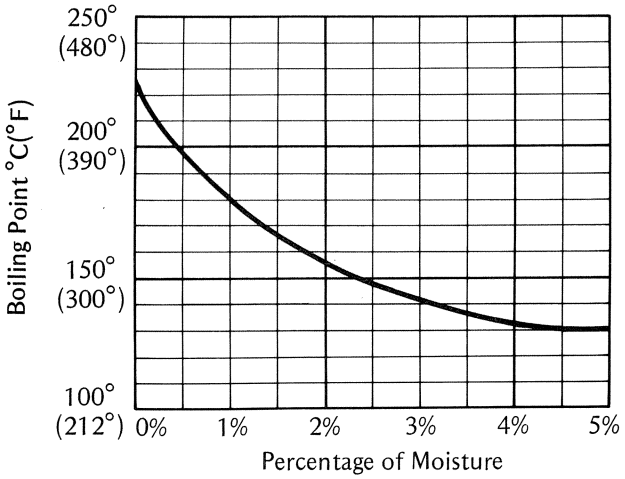

The graph of Fig. 521 shows how brake fluid contamination with moisture lowers the fluid boiling point. Although not shown in the graph, the boiling point also lowers as the fluid gets old, is contaminated with dirt, or if two different types of brake fluid are mixed.

Changing the brake fluid

The brake fluid should be changed in accordance with the Periodic Maintenance Chart (Pg. 195) and whenever it becomes contaminated with dirt or water.

- Attach a clear plastic hose to the bleed valve on the caliper, and run the other end of the hose into a container.
- Open the bleed valve (counterclockwise to open), and pump the brake lever until all the fluid is drained from the line.
- Close the bleed valve, and fill the reservoir with fresh brake fluid.
- Open the bleed valve, apply the brake by the brake lever or pedal, close the valve with the brake held applied, and then quickly release the lever or pedal. Repeat this operation until the brake line is filled and fluid starts coming out of the plastic hose. Replenish the fluid in the reservoir as often as necessary to keep it from running completely out.

Filling up the Brake Line

522

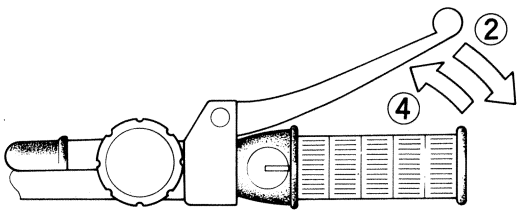

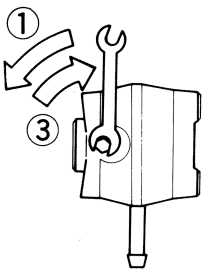

1. Open the bleed valve
2. Apply the brake, keeping the brake applied
3. Close the bleed valve
4. Then quickly release the brake

- Bleed the air from the lines.

Bleeding the brake

The brake fluid has a very low compression coefficient so that almost all the movement of the brake lever or pedal is transmitted directly to the caliper for braking action. Air, however, is easily compressed. When air enters the brake lines, brake lever or pedal movement will be partially used in compressing the air. This will make the lever or pedal feel spongy, and there will be a loss in braking power.

Bleed the air from the brake whenever brake lever or pedal action feels soft or spongy, after the brake fluid is changed, or whenever a brake line fitting has been loosened for any reason.

- Remove the reservoir cap, and check that there is plenty of fluid in the reservoir. The fluid level must be checked several times during the bleeding operation and replenished as necessary. If the fluid in the reservoir runs completely out any time during bleeding, the bleeding operation must be done over again from the beginning since air will have entered the line.
- With the reservoir cap off, slowly pump the brake lever or pedal several times until no air bubbles can be seen rising up through the fluid from the holes at the bottom of the reservoir. This bleeds the air from the master cylinder end of the line.

Bleeding the Brake Line (523)

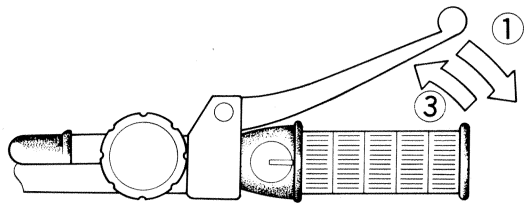

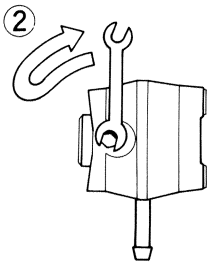

1. Hold the brake applied.
2. Quickly open and close the valve.
3. Release the brake.

- Install the reservoir cap, and connect a clear plastic hose to the bleed valve at the caliper, running the other end of the hose into a container. Pump the brake lever or pedal a few times until it becomes hard and then, holding the lever squeezed or the pedal pushed down, quickly open (turn counterclockwise) and close the bleed valve. Then release the lever or pedal. Repeat this operation until no more air can be seen coming out into the plastic hose. Check the fluid level in the reservoir every so often, replenishing it as necessary.
- When air bleeding is finished, install the rubber cap on the bleed valve, and check that the front or rear brake fluid is filled to the line marked in the reservoir (handlebar turned so that the reservoir is level).

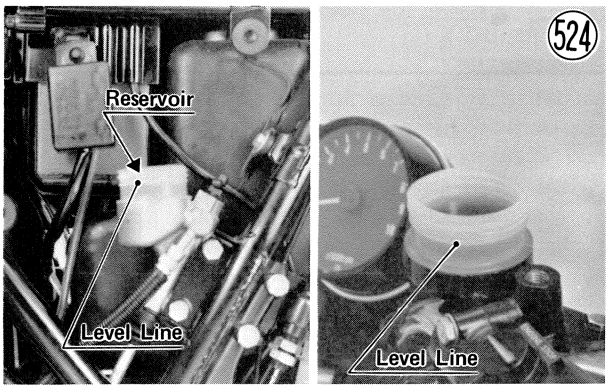

Master cylinder parts wear

When master cylinder parts are worn or damaged, proper brake fluid pressure cannot be obtained in the line, and the brake will not hold.

If the small relief port becomes plugged, especially with a swollen or damaged primary cup, the brake pads will drag on the disc.

- Check that there are no scratches, rust or pitting on the inside of the master cylinder, and that it is not worn past the service limit.
- Check the piston for these same faults.
- Inspect the primary and secondary cups. If a cup is worn, damaged, softened (rotted), or swollen, replace it. When inserting the cup into the cylinder, see that it is slightly larger than the cylinder (standard values given in the table). If fluid leakage is noted at the brake lever or pedal, the cups should be replaced. (The secondary cup is part to the piston assembly. Replace the piston if the secondary cup requires replacement).

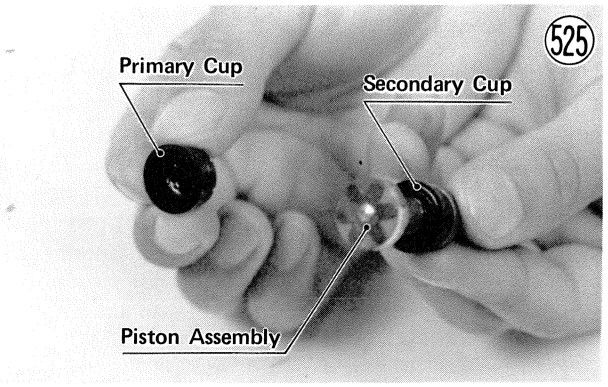

- Check that the spring is not damaged and is not shorter than the service limit.

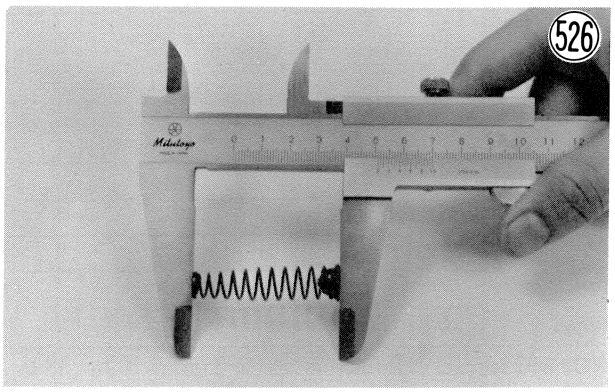

WARNING

When working with the disc brake, observe the precautions listed below.

1. Never reuse old brake fluid.
2. Do not use fluid from a container that has been left unsealed or that has been open a long time.
3. Do not mix two types of fluid for use in the brake. This lowers the brake fluid boiling point and could cause the brake to be ineffective. If may also cause the rubber brake parts to deteriorate. Recommended fluids are given in the table.
   NOTE: The type of fluid originally used in the disc brake is not available in most areas, but it should be necessary to add very little fluid before the first brake fluid change. After changing the fluid, use only the same type thereafter.

Table 94 Recommended Disc Brake Fluid

Atlas Extra Heavy Duty
Shell Super Heavy Duty
Texaco Super Heavy Duty
Wagner Lockheed Heavy Duty
Castrol Girling-Universal
Castrol GT (LMA)
Castrol Disc Brake Fluid

The correct fluid will come in a can labeled D.O.T.3. Do not use fluid that does not have this marking.

4. Don't leave the reservoir cap off for any length of time to avoid moisture contamination of the fluid.
5. Don't change the fluid in the rain or when a strong wind is blowing.
6. Except for the disc pads and discs, use only disc brake fluid, isopropyl alcohol, or ethyl alcohol for cleaning brake parts. Do not use any other fluid for cleaning these parts. Gasoline, motor oil, or any other petroleum distillate will cause deterioration of the rubber parts. Oil spilled on any part will be difficult to wash off completely and will eventually reach and break down the rubber used in the disc brake.
7. When handling the disc pads or disc, be careful that no disc brake fluid or any oil gets on them. Clean off any fluid or oil that inadvertently gets on the pads or disc with a high flash-point solvent. Do not use one which will leave an oily residue. Replace the pads with new ones if they cannot be cleaned satisfactorily.
8. Brake fluid quickly ruins painted surfaces; any spilled fluid should be completely wiped up immediately.
9. If any of the brake line fittings or the bleed valve is opened at any time, **AIR MUST BE BLED FROM THE BRAKE.**
10. When installing or assembling the disc brake, tighten the disc brake fittings to the values given in Table 6. Improper torque may cause the brake to malfunction.

●Replace the dust seal if damaged.

Caliper parts wear

Inspect the pads for wear. If either pad is worn down through the red line, replace both pads as a set. If any grease or oil spills on the pads, wash it off with trichloroethylene or a high flash-point solvent. Do not use one which will leave an oily residue. If the oil cannot be thoroughly cleaned off, replace the pads.

The fluid seal around the piston maintains the proper pad/disc clearance. If this seal is not satisfactory, pad wear will increase, and constant pad drag on the disc will raise brake and brake fluid temperature.

Replace the fluid seal under any of the following conditions: (a) fluid leakage around pad A; (b) brakes overheat; (c) there is a large difference in A and B pad wear; (d) the seal is stuck to the piston. If the fluid seal is replaced, replace the dust seal as well. Also replace both seals every other time the pads are changed.

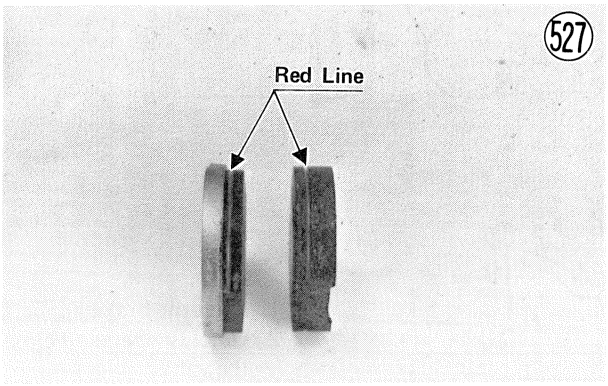

Table 95 Master Cylinder Parts ('76 and '77 models)

	Measurement	Standard	Service Limit
Front	Cylinder inside diameter	14.000~14.043 mm	14.08 mm
	Piston outside diameter	13.957~13.984 mm	13.90 mm
	Primary, secondary cup diameter	14.65~15.15 mm	14.50 mm
	Spring free length	49.1~53.2 mm	46.5 mm
Rear	Cylinder inside diameter	15.870~15.913 mm	15.95 mm
	Piston outside diameter	15.827~15.854 mm	15.77 mm
	Primary, secondary cup diameter	16.45~16.95 mm	16.30 mm
	Spring free length	39.2~43.2 mm	37.2 mm

NOTE: See Pg. 218 for the service data of 1978 and later models.

Measure the cylinder inside diameter and piston outside diameter.

Replace the cylinder and piston if they are worn out of tolerance, badly scored, or rusty.

Check the dust seals, dust covers, and the **O** rings, and replace any that are cracked, worn, swollen or otherwise damaged.

Table 96 Caliper Parts (Front, Rear)

	Standard	Service Limit
Cylinder inside diameter	42.850~42.900 mm	42.92 mm
Piston outside diameter	42.788~42.820 mm	42.75 mm

Brake line damage

The high pressure inside the brake line can cause fluid to leak or the hose to burst if the line is not properly maintained.

Bend and twist the rubber hose while examining it. Replace it if any cracks or bulges are noticed.

The metal pipe (only on front) is made of plated steel, and will rust if the plating is damaged. Replace the pipe if it is rusted or cracked (especially check the fittings), or if the plating is badly scratched.

Disc wear, warp

Besides wearing down, the disc may warp. A warped disc will cause the brake pads to drag on the disc and wear down both the pads and disc quickly. Dragging will also cause overheating and poor braking efficiency. Poor braking can also be caused by oil on the disc. Oil on the disc must be cleaned off with trichloroethylene or a high flash-point solvent. Do not use one which will leave an oily residue.

Jack up the motorcycle so that the front wheel is off the ground, and turn the handlebar fully to one side. Set up a dial gauge against the front disc as illustrated, and measure disc runout. Remove the jack and set the motorcycle up on its center stand, and measure the rear disc runout. If runout exceeds the service limit, replace the disc.

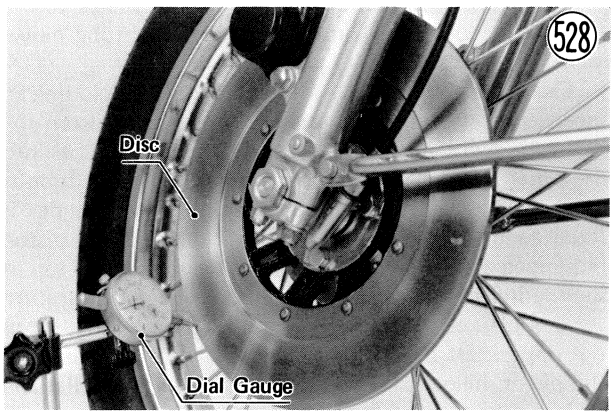

Table 97 Disc Runout

Standard	Service Limit
under 0.15 mm	0.3 mm

Measure the thickness of each disc at the point where it is has worn the most. Replace the disc if it has worn past the service limit.

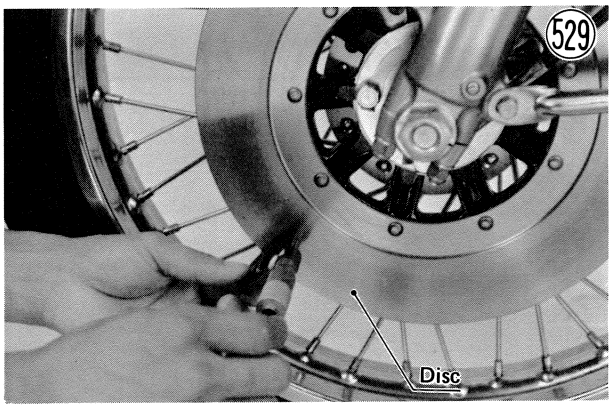

Table 98 Disc Thickness

Standard	Service Limit
6.9~7.1 mm	6 mm

STEERING STEM

The steering stem supports the handlebar and front fork shock absorbers, and turns inside the frame head pipe. Ball bearings in the upper and lower ends of the head pipe enable the steering stem to turn smoothly and easily.

The steering stem itself does not wear, but it may become bent. If it becomes bent, the steering will be stiff, and the bearings may become damaged.

The steering stem will require periodic adjustment as it becomes loose due to bearing wear. Overtightening during adjustment, however, will make the steering stiff and cause accelerated bearing wear. Lack of proper lubrication will also bring about the same results.

From overtightening or from a heavy shock to the steering stem, the bearing race surfaces may become dented. Damaged bearing races will cause the handlebar to jerk or catch when turned.

Table 99 Bearing Ball Specifications

	Size	Number
Upper	1/4"	19
Lower	1/4"	20

Steering stem warp

Examine the steering stem, and replace it if it is bent.

Bearing wear, damage

Wipe the bearings clean of grease and dirt, and examine the races and balls. If the balls or races are worn, or if either race is dented, replace both races and all the balls for that bearing as a set.

Bearing lubrication

In accordance with the Periodic Maintenance Chart (Pg. 195), and whenever the steering stem is disassembled, the steering stem bearings should be relubricated.

Wipe all the old grease off the races and balls, washing them in a high flash-point solvent if necessary. Replace the bearing parts if they show wear or damage. Apply

Steering Stem

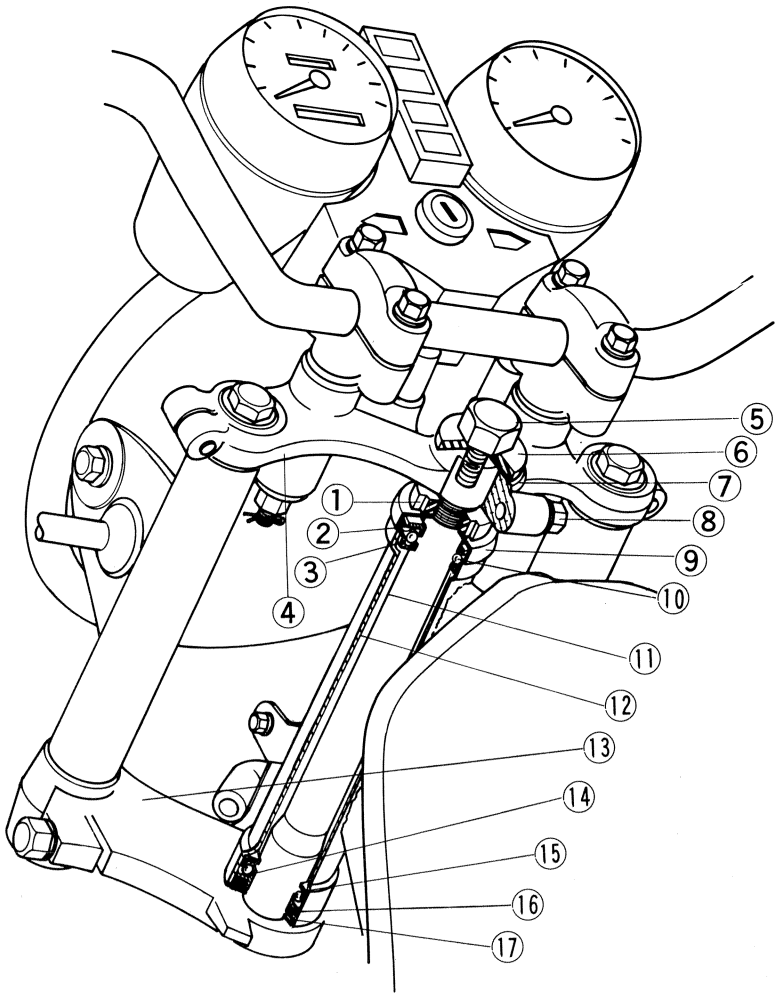

1. Stem Lock Nut
2. Upper Inner Race
3. Upper Outer Race
4. Stem Head
5. Stem Head Bolt
6. Flat Washer
7. Lock Washer
8. Stem Head Clamp Bolt
9. Stem Cap
10. Steel Ball
11. Steering Stem
12. Frame Head Pipe
13. Stem Base
14. Steel Ball
15. Lower Outer Race
16. Lower Inner Race
17. Grease Seal

grease liberally to the upper and lower races, and stick the bearing balls in place with grease.

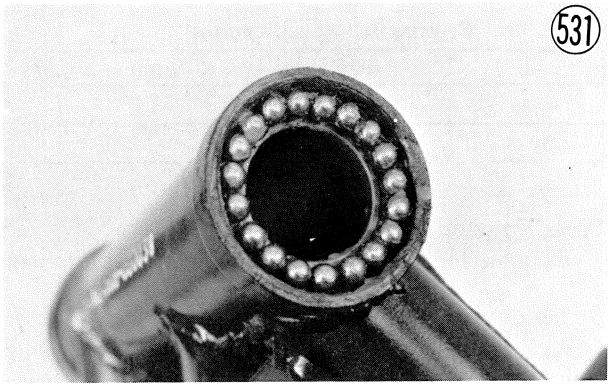

Grease seal deterioration, damage

Inspect the grease seal for any signs of deterioration or damage, and replace it if necessary.

Replace the grease seal with a new one whenever it has been removed. The grease seal comes off whenever the lower bearing inner race is removed.

FRONT FORK

Front fork construction is shown in Fig. 532. It consists of two shock absorbers connected to the frame head pipe by the stem base and stem head bracket. It accomplishes shock absorption through spring action, air compression in the inner tube, and resistance to the flow of the oil forced into the cylinder by tube movement.

Each shock absorber is a telescopic tube including an inner tube ⑫, outer tube ⑯, cylinder ⑳, piston ⑰, collar ㉕, and cylinder base ㉗. The inner tube fits into the outer tube, altering its position in the outer tube as the tube arrangement absorbs shocks. The cylinder is fixed to the bottom of the outer tube and the piston (equipped with a piston ring ⑱) is secured to the top of the cylinder. The collar (coupled with a non-return valve ㉔), fixed in the lower end of the inner tube, forms the upper part of the lower chamber and together with the piston helps seal the upper chamber. The collar and cylinder base configuration function to form an oil lock at the end of the compression stroke to prevent the inner tube from striking the bottom. Small orifices (2) in the upper part of the cylinder bring about an oil lock at the end of the extension stroke to prevent the inner tube from striking the top.

Oil is prevented from leaking out by the oil seal ⑮, which is fitted at the upper end of the outer tube. A

Front Fork

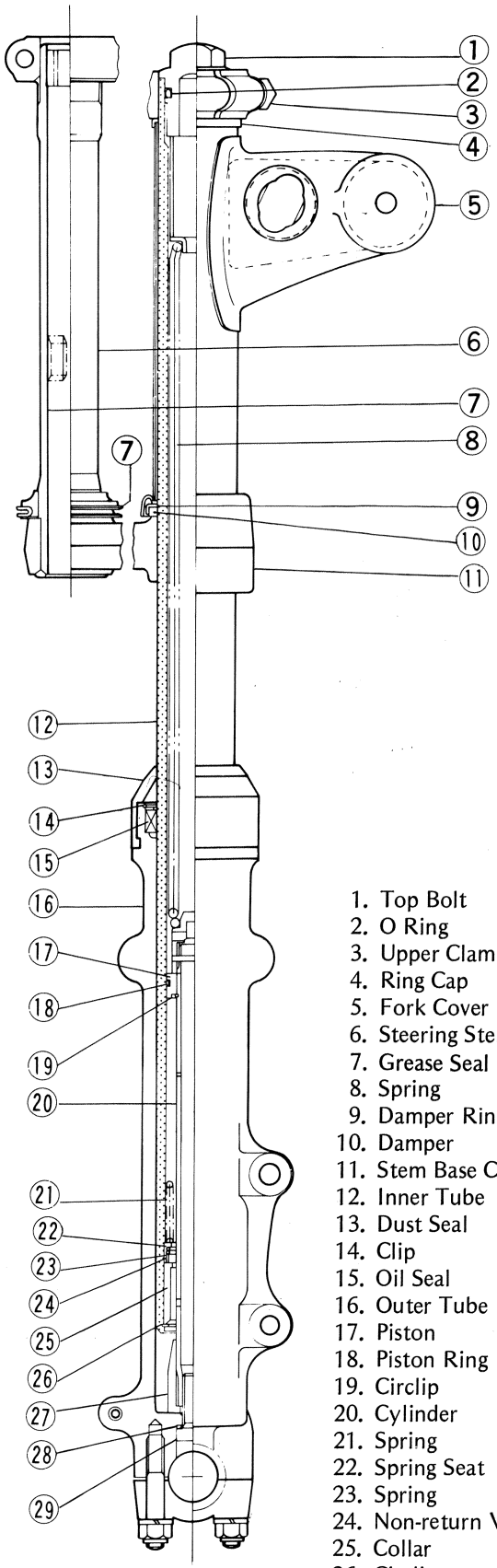

1. Top Bolt
2. O Ring
3. Upper Clamp Bolt
4. Ring Cap
5. Fork Cover
6. Steering Stem
7. Grease Seal
8. Spring
9. Damper Ring
10. Damper
11. Stem Base Cover
12. Inner Tube
13. Dust Seal
14. Clip
15. Oil Seal
16. Outer Tube
17. Piston
18. Piston Ring
19. Circlip
20. Cylinder
21. Spring
22. Spring Seat
23. Spring
24. Non-return Valve
25. Collar
26. Circlip
27. Cylinder Base
28. Gasket
29. Allen Bolt

dust seal ⑬ on the outside of the tube keeps dirt and water from entering and damaging the oil seal and tube surface.

Front Spring Force

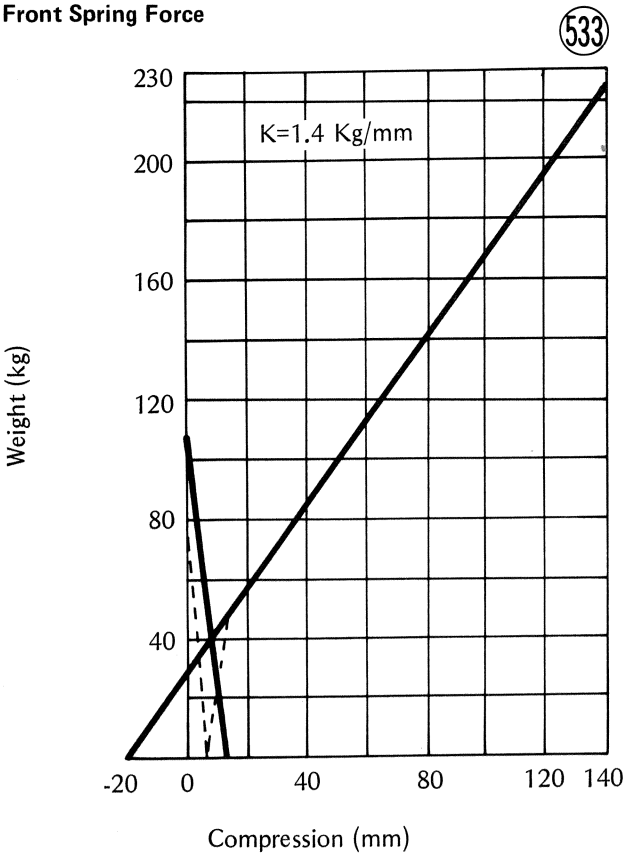

Compression stroke

Whenever a load is placed on the front fork and whenever the front wheel receives a shock, the inner tube ③ moves down inside the outer tube ②, compressing both the spring ① and the air in the inner tube. At the same time, low pressure (suction) is created in an enlarging chamber (upper chamber) formed between the inner tube and the cylinder ⑦, and draws in oil from a diminishing chamber (lower chamber) formed between the outer tube and the cylinder. As the lower chamber shrinks in size with oil passing freely through the non-return valve ⑪ into the upper chamber, oil also passes freely through the cylinder lower orifices into the cylinder as the inner tube approaches the cylinder base ⑭. Near the end of the compression stroke, the clearance between the tapered-out cylinder base and the collar at the lower end of teh inner tube approaches zero. The resulting resistance to the flow of oil through this small space slows the downward movement, finally forming an oil lock to finish the compression stroke.

Extension stroke

Following the compression stroke is the extension stroke, in which the inner tube is pushed back out by the compressed spring. As the tubes move apart, the

Compression Stroke

534

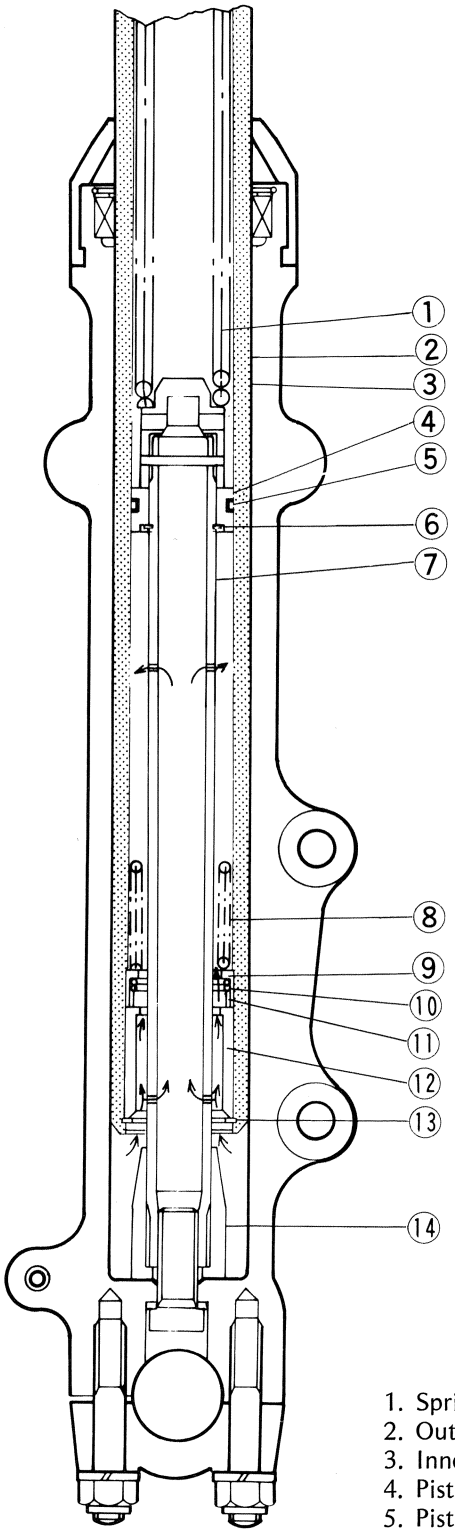

1. Spring
2. Outer Tube
3. Inner Tube
4. Piston
5. Piston Ring
6. Circlip
7. Cylinder
8. Spring
9. Spring Seat
10. Spring
11. Non-return Valve
12. Collar
13. Circlip
14. Cylinder Base

Extension Stroke

535

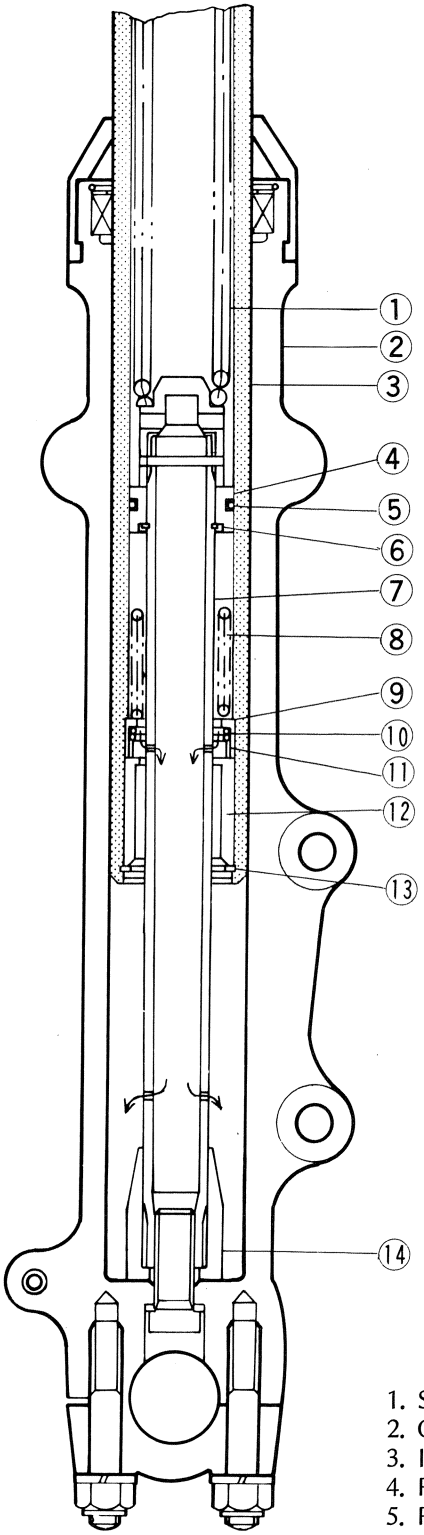

1. Spring
2. Outer Tube
3. Inner Tube
4. Piston
5. Piston Ring
6. Circlip
7. Cylinder
8. Spring
9. Spring Seat
10. Spring
11. Non-return Valve
12. Collar
13. Circlip
14. Cylinder Base

upper chamber grows smaller, forcing the oil through the cylinder upper orifices since the oil cannot return the way it came through the non-return valve. These small holes restrict the oil flow into the inner tube, damping fork extension. Near the end of the extension stroke both the cylinder spring and the arrangement of the cylinder upper orifices provide further resistance to extension. As the collar rises, reducing the size of the upper chamber, the cylinder upper orifices are eliminated and an oil lock forms, finishing the extension stroke.

Either too much or too little oil in the shock absorbers will adversely affect shock damping. Too much oil or too heavy an oil makes action too stiff; too little oil or too light an oil makes the action soft, decreases damping potential, and may cause noise during fork movement.

Contaminated or deteriorated oil will also affect shock damping and, in addition, will accelerate internal wear. The fork oil should be changed periodically (Pg. 195) or sooner if the oil appears dirty.

A bent, dented, scored, or otherwise damaged inner tube will damage the oil seal, causing oil leakage. A badly bent inner tube may cause poor handling.

Fork oil ('76 and '77 models)

NOTE: See Pgs. 218~219 for the service data of 1978 and later models.

To check the fork oil level, first place a jack or stand under the engine so that the front wheel is raised off the ground. Remove the top bolt from the inner tube. Insert a rod down into the tube, and measure the distance from the top of the inner tube to the oil level. If the oil is below the correct level, add enough oil to bring it up to the proper level, taking care not to overfill.

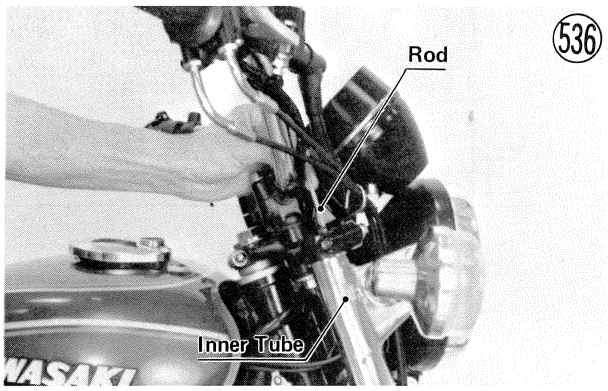

To drain out the old oil, remove the drain screw from the lower end of the outer tube. With the front wheel on the ground and the front brake fully applied push down on the handlebar a few times to pump out the oil. Install the drain screw, remove the top bolt, from the inner tube, and pour in the type and amount of oil specified in Table 100. Then replace the top bolt and check the oil level. If the oil is below the specified level, add oil and re-check the oil level.

NOTE: After the front fork oil is changed, before checking the oil level, pump the forks several times to expel air from the upper and lower chambers.

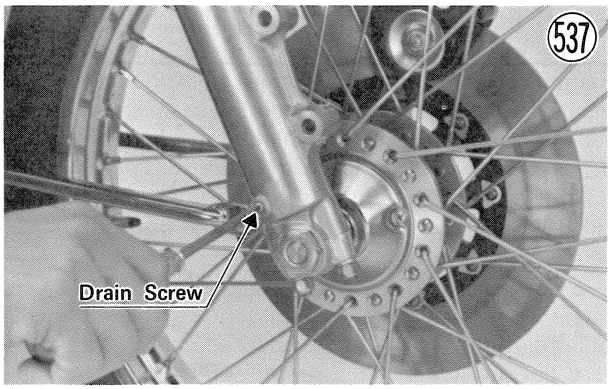

Table 100 Fork Oil ('76 and '77 models)

Type	Filling fork oil Capacity		Oil Level
	When changing oil	After disassembly and completely dry	
SAE 10W20	about 140 cc	171~180 cc	396 mm from top of inner tube

Spring tension

NOTE: See Pgs. 218~219 for the service data of the 1978 and later models.

Since the spring becomes shorter as it weakens, check its free length to determine its condition. If the spring of either shock absorber is shorter than the service limit, it must be replaced. If the length of a replacement spring and that of the remaining spring vary greatly, the remaining spring should also be replaced in order to keep the shock absorbers balanced for motorcycle stability.

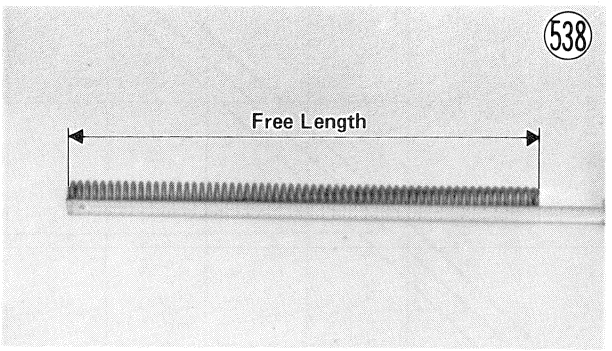

Table 101 Fork Spring Free Length ('76 and '77 models)

Standard	Service Limit
479.5 mm	469.5 mm

Inner tube damage

Visually inspect the inner tube, and repair any damage. If the damage is not repairable, replace the inner tube. Since damage to the inner tube damages the oil seal, replace the oil seal whenever the inner tube is repaired or replaced. Temporarily assemble the inner and outer tubes, and pump them back and forth manually to check for smooth operation.

CAUTION **If the inner tube is bent or badly creased, replace it. Excessive bending, followed by subsequent straightening, can weaken the inner tube.**

REAR SHOCK ABSORBERS

The rear shock absorbers serve to dampen shock transmitted to the frame and rider from the rear wheel. For this purpose, they are connected between the frame and the rear end of the swing arm. Shock absorption is performed by the spring and by the resistance to the flow of oil inside each unit. Shock absorption is further aided by the use of rubber bushings in both the upper and lower shock absorber mountings.

Since the rear shock absorbers are sealed units which cannot be disassembled, only external checks of operation are necessary. With the shocks removed, compress each one and see that the compression stroke is smooth and that there is damping in addition to spring resistance to compression. When the unit is released, the spring should not suddenly snap out to full length. It should extend smoothly with notable damping. When the shock absorber is operated, there should be no oil leakage. If either shock absorber does not perform all of these operations satisfactorily, or if one unit feels weaker than the other, replace both shock absorbers as a set. If only one unit is replaced and the two are not balanced, motorcycle instability at high speeds may result.

Shock absorber spring force for the 3 different settings is shown in the graph.

Rear Spring Force (539)

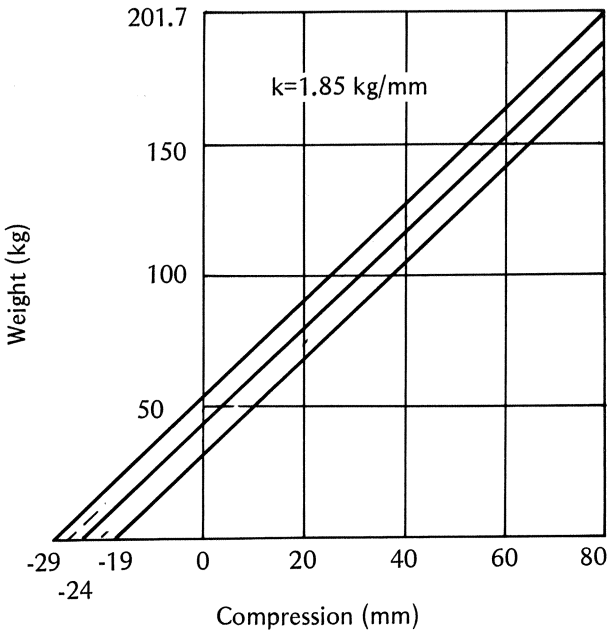

Bushings

Check the rubber bushings, and replace any that are worn, cracked, hardened, or otherwise damaged.

SWING ARM

The swing arm is designed to work with the shock absorbers to dampen the shock to the frame from the rear wheel. The rear of the swing arm is connected to the frame by the rear shock absorbers, while the front end pivots on a shaft connected to the frame. When the

Rear Shock Absorber (540)

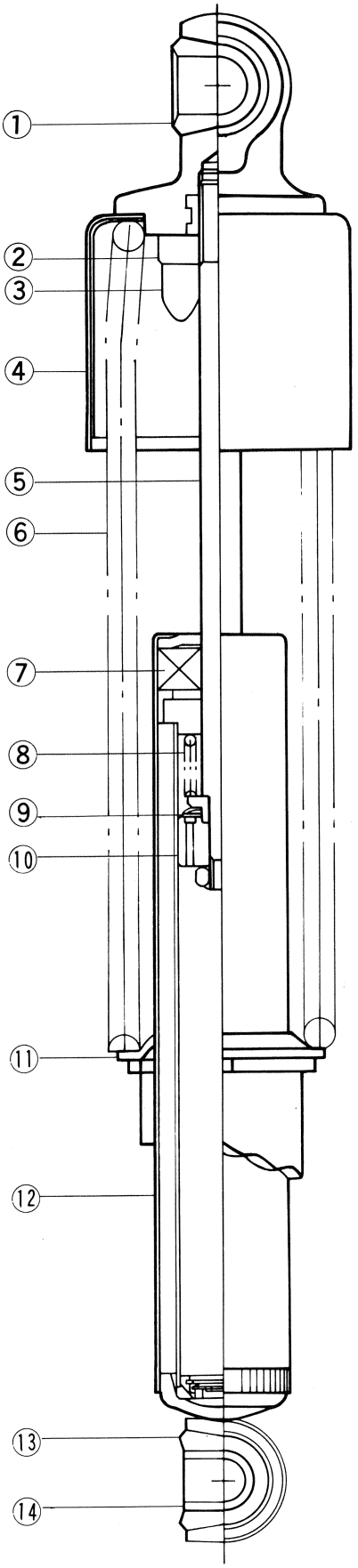

1. Rubber Bushing
2. Nut
3. Stopper Rubber
4. Cover
5. Piston Rod
6. Outer Spring
7. Oil Seal
8. Inner Spring
9. Check Valve
10. Piston
11. Spring Seat
12. Outer Shell
13. Rubber Bushing
14. Collar

rear wheel receives a shock, the swing arm, pivoting on its shaft, allows the wheel to move up and down in relation to the frame within the limits of the shock absorbers.

Wear takes places where the swing arm sleeve contacts the bushes (1976 and 1977 models) or needle bearings (1978 and later models). If wear has progressed such that the swing arm has become loose, the motorcycle will be unstable. To minimize wear, the swing arm should be kept properly lubricated.

A bent pivot shaft or twisted swing arm will also cause instability by throwing the rear wheel out of alignment.

Swing arm sleeve, bush (needle bearing) wear

Measure the outside diameter of the swing arm sleeve at both ends with a micrometer. Replace a swing arm sleeve if the diameter is less than the service limit or if it shows visible damage.

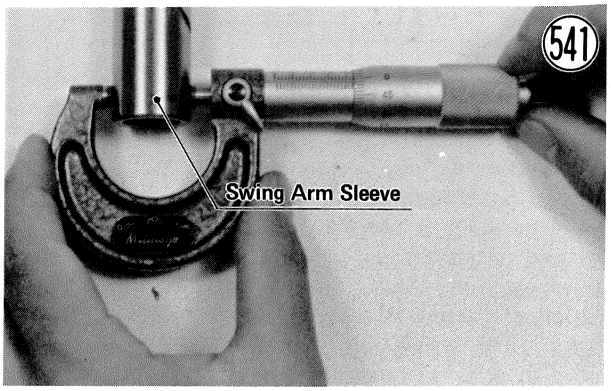

1976 and 1977 models: Measure the inside diameter of each bush with a cylinder gauge. Replace both bushes if the diameter of either exceeds the service limit. Also, replace both bushes if either shows visible damage.

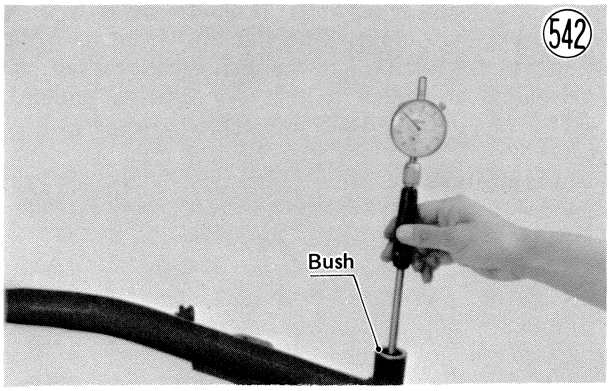

1978 and later models: The rollers in the needle bearings wear so little that the wear is difficult to measure. Instead, inspect the needle bearings for abrasions, color change, or other damage. If there is any doubt as to the condition of any needle bearing, replace all the needle bearings. Whenever the swing arm sleeve is replaced, also replace the needle bearings.

Table 102 Swing Arm Sleeve, Bush Diameter

Diameter		Standard	Service Limit
Sleeve Outside	'76 and '77	21.980 ~ 22.000 mm	21.95 mm
	'78 and later	21.987 ~ 22.000 mm	21.96 mm
Bush Inside ('76 and '77)		22.055 ~ 22.088 mm	22.29 mm

Swing Arm

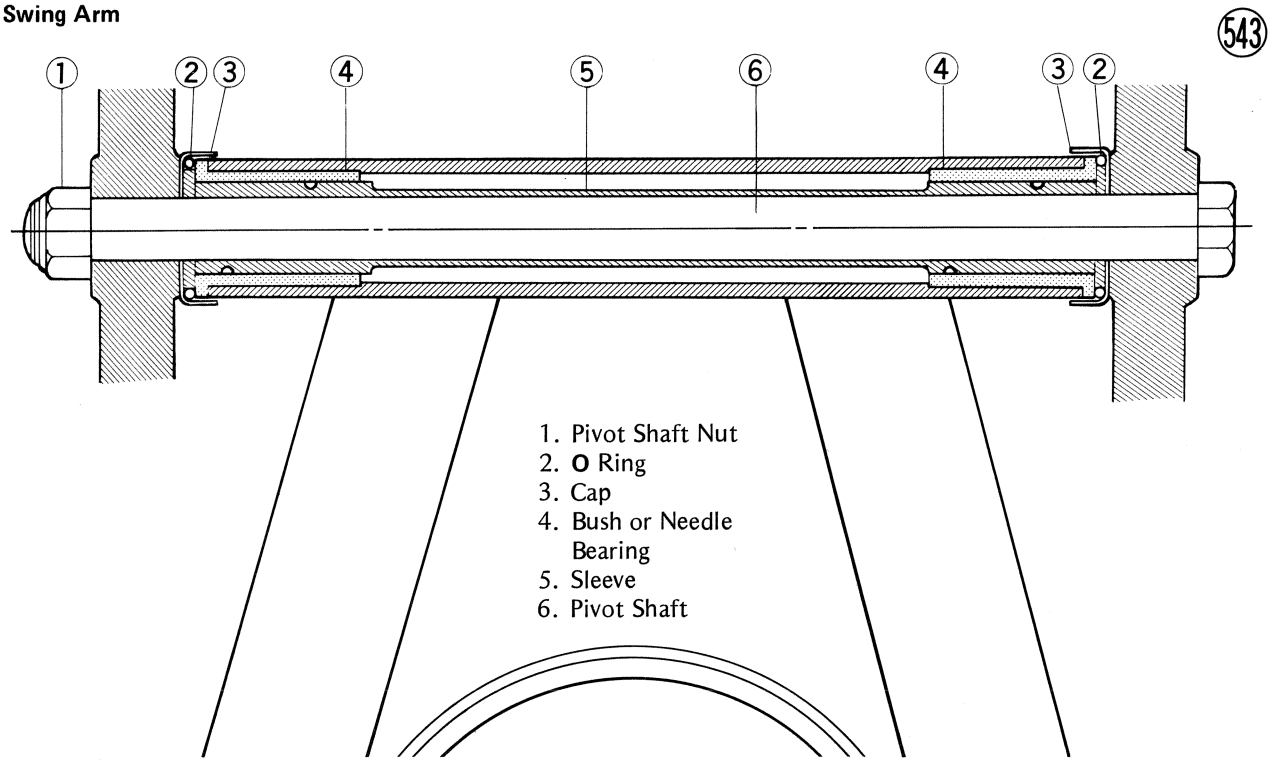

Pivot shaft

To measure the pivot shaft runout, set the pivot shaft on **V** blocks at the ends of the shaft, and set a dial gauge to the shaft halfway between the blocks. Turn the shaft to measure the runout. The amount of runout is the amount of dial variation. If the shaft runout exceeds the service limit, straighten it. If it cannot be straightened, or if the runout exceeds 0.7 mm, replace the shaft.

Pivot Shaft Runout (544)

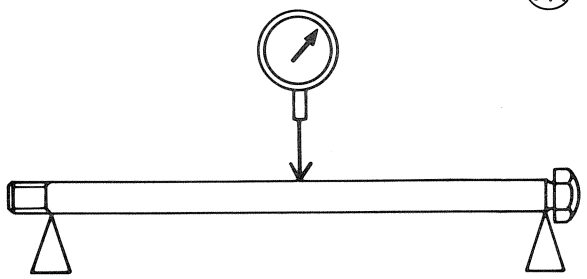

Table 103 Pivot Shaft Runout

Standard	Service Limit
under 0.1 mm	0.14 mm

Swing arm lubrication

There is a grease fitting on the swing arm for lubrication. Grease the swing arm with regular cup grease as a part of general lubrication (Pg. 197) which the frequency given in the Periodic Maintenance Chart (Pg. 195). Force the grease into the fitting until it comes out at both sides of the swing arm, and wipe off any excess. If the grease does not come out, first check that the fitting is not clogged with dirt or old grease. If the fitting is clear but will still not take grease; remove the swing arm (Pg. 109), clean out the old grease, and apply grease to the sleeve and bushes (or needle bearings).

MUFFLERS

The mufflers reduce exhaust noise and conduct the exhaust gases back away from the rider while keeping power loss to a minimum. If much carbon is built up inside the mufflers, exhaust efficiency is reduced, which lowers the engine power output.

If there is any exhaust leakage where the mufflers connect to the cylinder head, or if the gaskets appear damaged, replace the gaskets. If either muffler is badly damaged, dented, cracked or rusted, replace it with a new one.

Muffler (545)

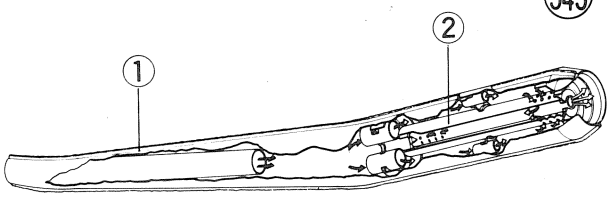

1. Muffler
2. Buffle Tube

DYNAMO

NOTE: See the Charging System (Pgs. 219~222) for 1978 and later models.

The dynamo generates the current required by the electrical circuits. The generated current is a 3 phase alternating current (AC), which is changed to direct current (DC) by a rectifier and controlled by a solid-state regulator to supply an even voltage to the circuit components.

Dynamo Circuit (546)

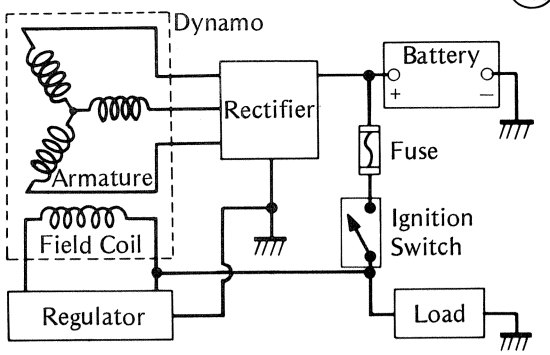

The dynamo consists of a stationary field coil ③, an armature ①, and a revolving rotor ④, all of which are separately mounted. The field coil and armature are both mounted in the dynamo cover, while the rotor is secured to the left end of the crankshaft ⑩ and rotates at engine rpm. This rotor/stationary field coil combination characterizes the dynamo used on this motorcycle. This is different from a conventional dynamo, since there is no brush needed to supply the field coil with the magnetizing current.

Dynamo Construction (547)

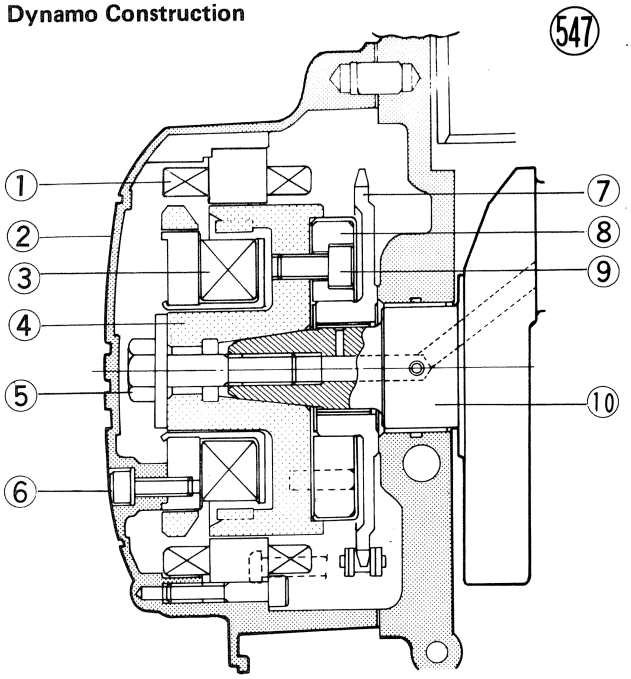

1. Armature
2. Dynamo Cover
3. Field Coil
4. Rotor
5. Rotor Bolt
6. Allen Bolt
7. Starter Motor Sprocket
8. Starter Motor Clutch
9. Allen Bolt
10. Crankshaft

When the ignition switch is turned on, current controlled by the regulator flows to the field coil, and the resulting magnetic field (that accompanies electron flow) is concentrated in the rotor. When starting the engine, the kick starter or starter motor turns the crankshaft, and magnetic lines of force cut through the armature windings (3), generating current. These windings are connected in a wye connection (Fig. 548) to produce a 3 phase alternating current (Fig. 549). Since the voltages of these 3 phases overlap, there is a continuous, even supply of current for the circuit components.

Wye Connection

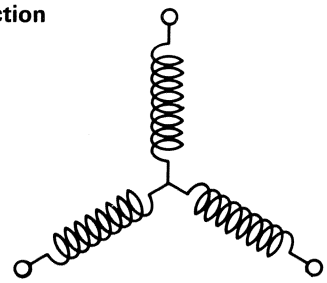

548

Dynamo Current

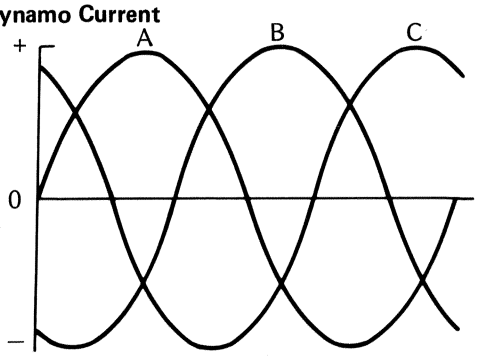

549

If the battery, rectifier, and regulator are all good but there is low voltage or insufficient charging current, the dynamo may be defective. A defective dynamo is due to either an electrical short or open in the field coil or armature. Either an electrical short or open will result in a low output or no output at all.

Dynamo test

Before making this test, check the condition of the battery (Pg. 176) and rectifier (Pg. 173). If the battery voltage is less than 12 volts, charge the battery. Both the output voltage and output amperage should be checked. Before starting the dynamo test warm up the engine to obtain actual dynamo operating conditions.

Dynamo Voltage Test

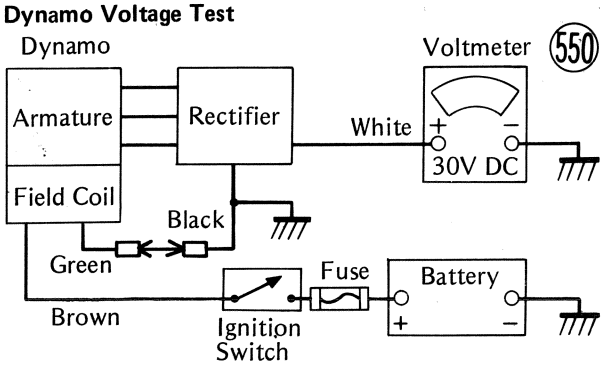

550

To check the output voltage:

- Remove the headlight unit (Pg. 98), and disconnect the 9-pin connector which is in the headlight housing. This removes the load from the dynamo.
- Remove the left side cover.
- Disconnect the rectifier white lead from the battery + lead.
- Set a multimeter to the 30V DC range, and connect its + lead to the rectifier white lead and its – lead to chassis ground.

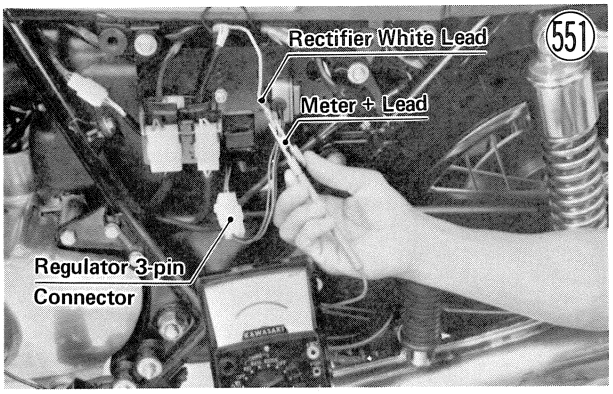

551

- Check that the ignition switch is turned off, and disconnect the regulator 3-pin connector.

CAUTION **If the regulator connector is disconnected with the ignition switch on, the regulator may be damaged.**

- Connect the green and the black leads together at the plug.

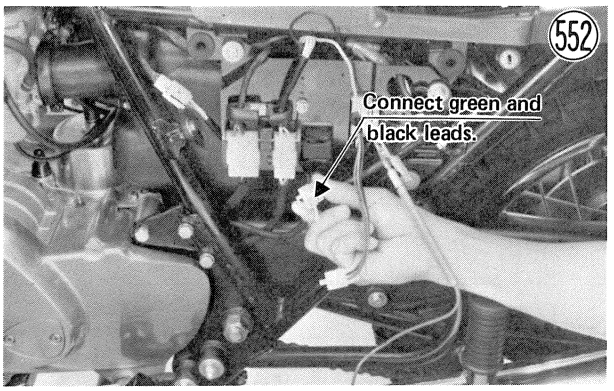

552

CAUTION **When connecting the green and the black leads be certain that the connection does not get shorted to chassis ground. Also, to avoid battery discharge, do not leave these leads connected any longer than necessary; disconnect them after finishing the test.**

- Start the engine, run it at the rpm noted in Table 104, and note the meter reading. A lower reading indicates the dynamo is defective.

CAUTION **After starting the engine, DO NOT allow the engine to run at a higher rpm than shown in the table (not above 2,000 rpm) in order to avoid damage to the rectifier or other electrical components.**

Table 104 Dynamo Output Voltage

Output Voltage @1,100 rpm
More than 14V

●Turn off the ignition switch to stop the engine.
To check the output amperage:
NOTE: Two multimeters are necessary for this test.
●Connect the 9-pin connector in the headlight housing, and install the headlight unit.
●Connect the rectifier white lead to the battery + lead.
●Disconnect the battery – lead from the battery – terminal. Set the multimeter to the 12A DC range, and connect the meter – lead to the battery – lead and meter + lead to the battery – terminal.

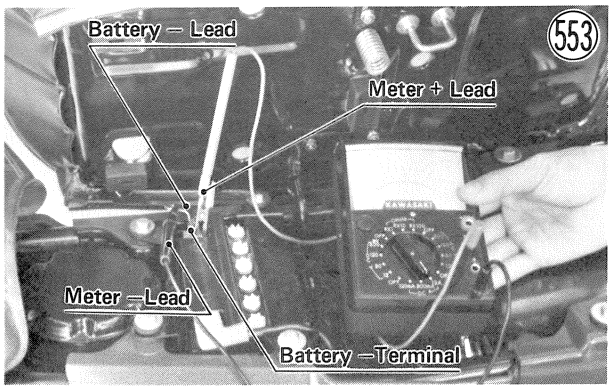

●Connect a temporary lead, such as an alligator clip, to the battery – terminal and meter – lead. This works as a bypass and prevents damage to the multimeter from back current when starting the engine.

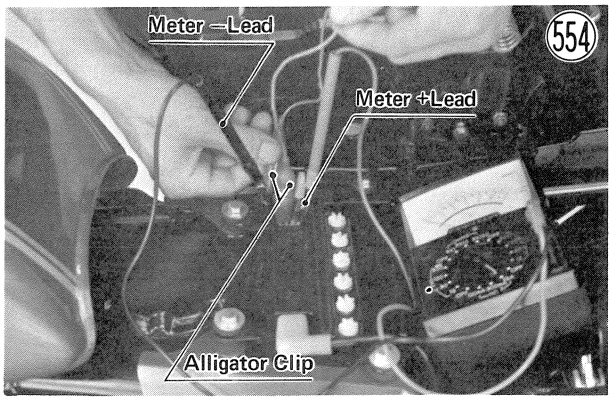

●Set the multimeter to 30V DC, and connect the meter + lead to the battery + terminal and the meter – lead to the battery – terminal.
●Start the engine with the kick starter.

CAUTION **1. Make sure that all connections are firm. A loose connection allows the generator output voltage to increase instantly. This may cause damage to the rectifier or other electrical components.**

2. To prevent damage to the multimeter caused by reverse starting current, DO NOT use the electric starter when starting the engine.

Dynamo Amperage Test

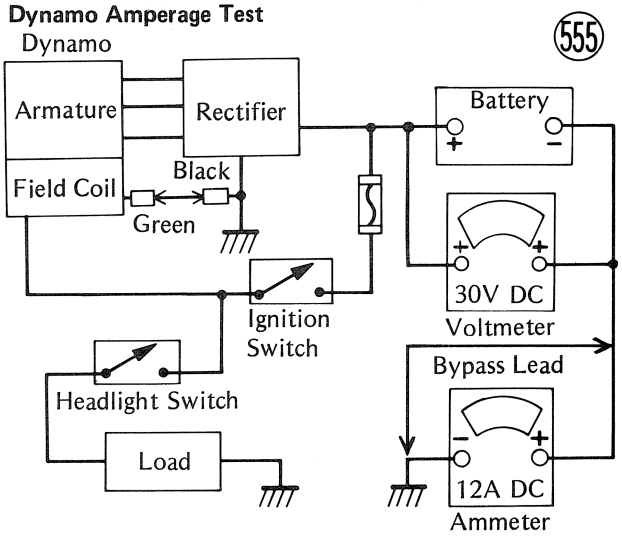

●Turn on the headlight switch with the headlight on high beam.
●Disconnect one end of the bypass lead.
●Run the engine at the rpm in Table 105, and note the readings of voltage and amperage. A lower reading indicates that the dynamo is defective.
●Turn off the ignition switch to stop the engine.
●Disconnect the green and the black leads.

If the dynamo was found to be defective, carry out the following checks to determine which part is defective.
●Disconnect the 4-pin connector on the electrical panel.
●Set the multimeter to the R x 1 range, and measure for continuity between each of the three armature yellow leads (3 measurements). If there is more resistance than shown in Table 106, or no meter reading (infinity) for any two armature leads, the armature has an open and must be replaced.

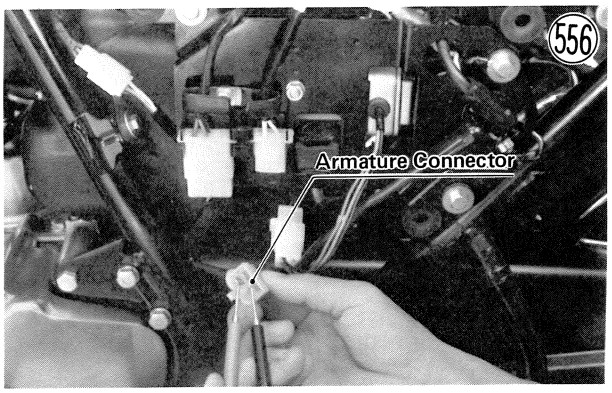

Table 105 Battery Charging Voltage and Amperage

Meter	Connection	Read @5,000 rpm
30V DC	Meter + Lead → Battery + Terminal, Meter – Lead → Battery – Terminal	More than 16V
12A DC	Meter + Lead → Battery – Terminal, Meter – Lead → Battery – Lead	More than 6A

Table 106 Armature Resistance

Meter	Read
R x 1	0.4~0.6 Ω

- Using the highest resistance range of the multimeter, measure the resistance between each of the three armature leads and chassis ground. There should be no meter reading (infinity). Any meter reading indicates a short, necessitating armature replacement.
- Disconnect the 6-pin connector on the electrical panel.
- Using the R x 1 range, measure the resistance between the field coil green lead and brown lead. Refer to Table 107 for standard resistance values. A lesser reading than the standard resistance indicates a short in the coil, and a higher reading or no reading at all indicates an open. If the field coil is found to be open or shorted, replace the field coil with a new one.

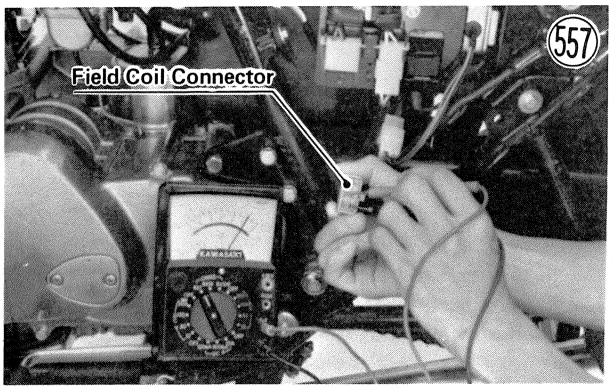

Table 107 Field Coil Resistance

Meter	Read
R x 1	2.7~3.4 Ω

RECTIFIER ('76 and '77 models)

NOTE: See the Charging System (Pgs. 219~222) for 1978 and later models.

The rectifier is used to change the alternating current (AC) from the dynamo to direct current (DC) for the battery charging, ignition, lighting, and other circuits. It contains six silicon diodes to rectify (change to DC) the three phases of the dynamo output. The diodes are connected in a bridge circuit arrangement for efficient, full-wave rectification.

The reason that a diode only permits direct current to flow in the part of the circuit in which it is connected is that a diode conducts current only in one direction. The current of electrons flows only from the – to the + side of the diode. However, a defective diode will conduct in both directions (a short) or not conduct at all (an open). If any of the diodes is shorted or open, the voltage from the rectifier will be below normal, and the battery may not charge adequately.

Rectifier Circuit

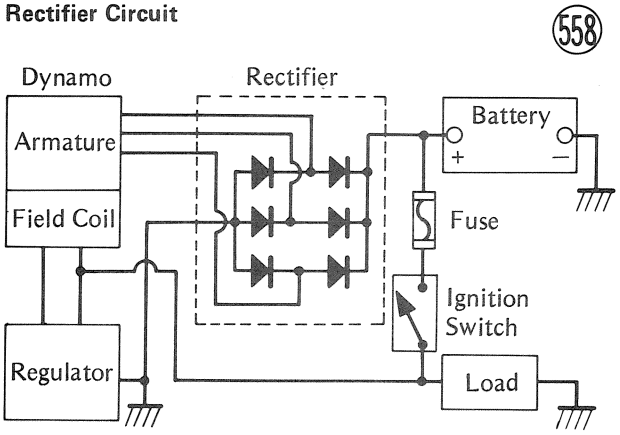

Diode

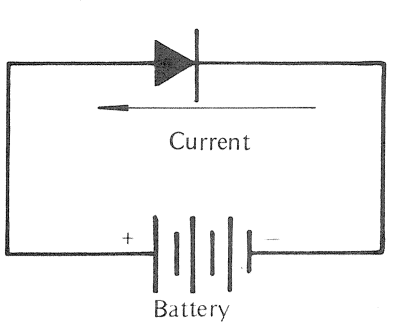

Inspection

- With the engine off, remove the left side cover, disconnect the rectifier white lead from the battery + side, and disconnect the rectifier black lead.

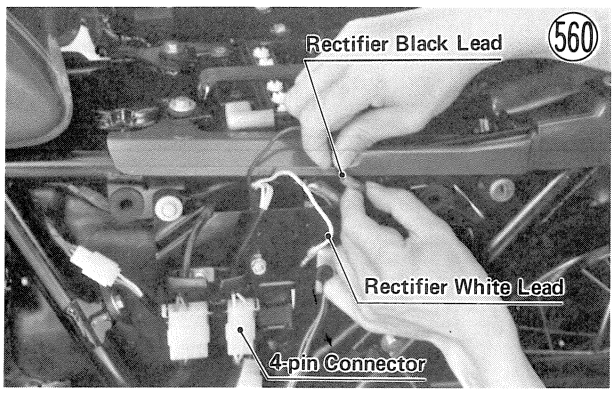

- Disconnect the 4-pin connector on the electrical panel.
- Using the R x 10 or R x 100 ohmmeter range, check the resistance in both directions between the white lead and each yellow lead, and between the black lead and each yellow lead. There is a total of 12 measurements. The resistance should be low in one direction and more than ten times as much in the other direction. If any two leads are low or high in both directions, the rectifier is defective and must be replaced.

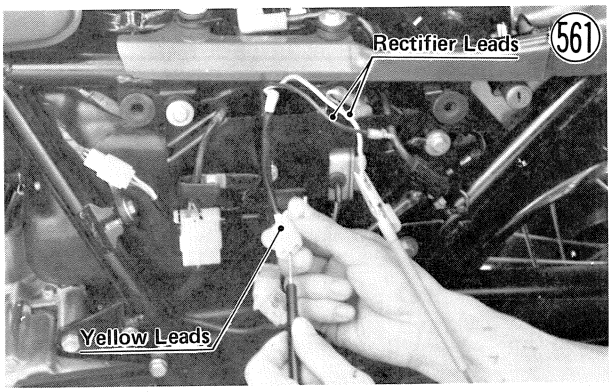

NOTE: The actual meter reading varies with the meter used and the individual rectifier, but, generally speaking, the lower reading should be within $^1/_3$ scale of zero ohms.

CAUTION **Be careful not to strike, scratch, or in any other way damage the rectifier. Such damage may cause the rectifier to short.**

REGULATOR ('76 and '77 models)

NOTE: See the Charging System (Pgs. 219 ~ 222) for 1978 and later models.

The solid-state regulator limits dynamo output voltage a maximum of 14.0 ~ 15.0 volts. Since it contains no contacts or other moving parts, it does not wear out and never needs to be adjusted. It is therefore manufactured as a sealed unit, and must be replaced as a unit should it become defective. Internal regulator operation is explained here only to aid the technician in troubleshooting and in understanding test procedures.

When the field coil current (I_f) is constant, the dynamo output voltage (V) increases with an increase in engine rpm. However, the voltage will become excessive at high engine rpm, burning out the lights and overcharging the battery unless the field coil current is reduced. The regulator is included in the circuit to reduce the field coil current at high rpm, keeping the voltage between 14.0 ~ 15.0 V for all electrical equipment.

Regulator Circuit

(a) at Low Engine Speed

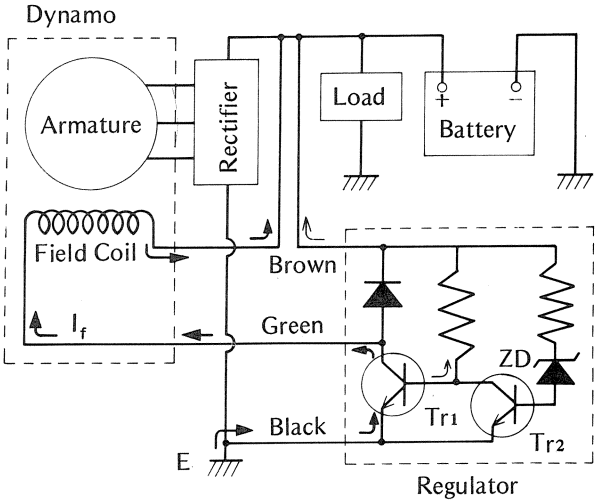

Fig. 562 shows a basic circuit of the regulator that is referred to in the following explanation.

The main components of the circuit are two transistors (Tr) and a zener diode (ZD). The transistors function as electronic switches to control the field coil current. The zener diode checks on the dynamo output voltage and triggers the driver transistor (Tr_2).

When the dynamo output voltage is lower than the specified value, such as at low engine speeds, the field coil current (I_f) runs from chassis ground (E), through transistor Tr_1, thus magnetizing the field coil. When engine speed rises, and the voltage increases above the specified value, ZD conducts and "switches on" driver transistor Tr_2, which in turn "switches off" transistor Tr_1. This blocks current flow to the field coil, and reduces its magnetism, which lowers dynamo output voltage.

As dynamo output voltage drops below the preset breakdown voltage of the zener diode, it no longer conducts, thereby "switching off" Tr_2. Transistor Tr_1 "switches on", energizing the field coil and increasing its magnetism, which raises the dynamo output voltage until it again reaches the specified value, and the cycle explained above repeats itself.

Thus, the transistors act as relays by switching on and off as many as several hundred times per second, and serve to keep the dynamo output voltage constant.

CAUTION **When inspecting the regulator, observe the following to avoid damage to the regulator.**

1. **Do not reverse the battery lead connections. This will burn out the diodes.**
2. **Do not disconnect the regulator with the ignition switch on. This may damage the transistors.**
3. **Do not disconnect the battery leads while the engine is running.**

Regulator testing

In circuit:

If the battery continually discharges, or if it overcharges, the regulator may be defective. Symptoms of too high a charging voltage are: (a) battery water must be added often to all the cells; (b) lights burn out when running at high rpm.

(b) at High Engine Speed

562

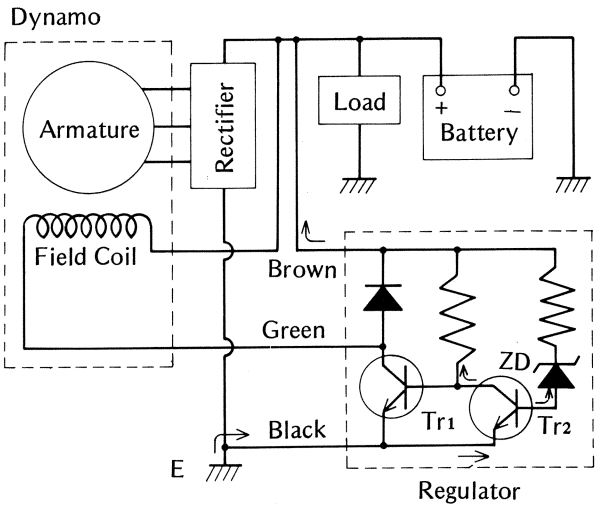

If the battery is defective or if it is discharged, the regulator will not operate normally and the battery must first be charged before any regulator tests can be made. Check the battery before starting the engine and charge it if it is less than 12 volts.

- Check that all lights are turned off.
- Set a multimeter to the 30V DC range, and connect the + meter lead to the battery + terminal and the – meter lead to the battery – terminal.

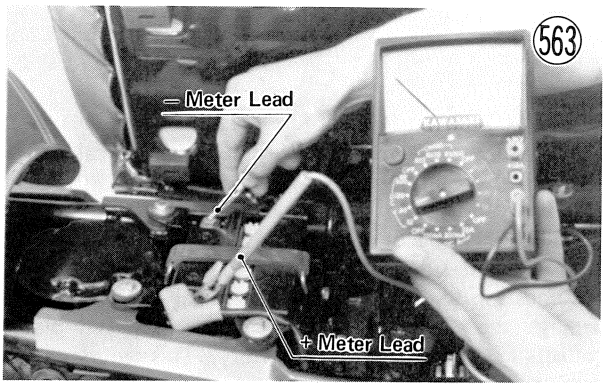

Regulator Test (In Circuit)

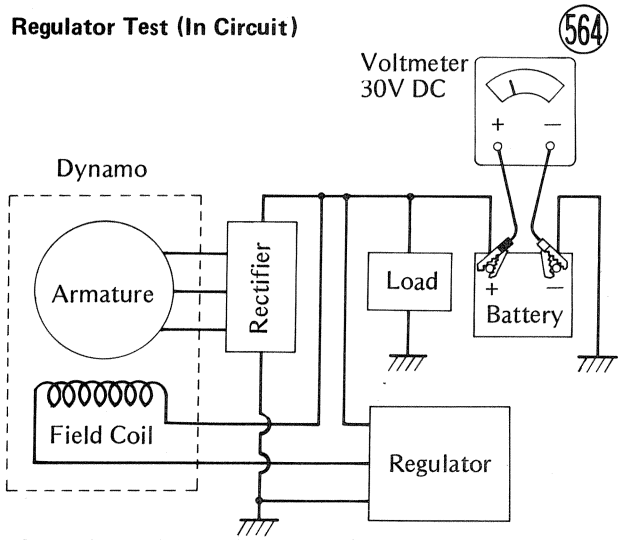

- Start the engine, and measure the battery voltage at the specified engine speed. The meter reading should show the value in Table 108.
- Stop the engine by turning the ignition switch off.

Table 108 Regulated Dynamo Output Voltage (Regulator in circuit)

Meter	Connections	Standard
30V DC	Meter (+) ↔ Battery (+) Meter (–) ↔ Battery (–)	14.0~15.0 V @ 3,000 rpm

If the voltage reading is more than specified, either the regulator is defective, or it is not properly connected into the circuit due to a loose connection, broken wire, etc. Carefully check all connections before replacing the regulator.

If the voltage reading is less than specified, there may be a faulty dynamo or rectifier. Perform the following regulator out-of-circuit test and if the regulator checks out good, check the rectifier (Pg. 173), dynamo (Pg. 170), and wiring.

Out of circuit:

To make this test, a voltage source and a 12V 3~6W bulb with a socket and leads are required. This is because the regulator can not be tested properly using just the multimeter as in the case of a mechanical regulator.

- Pull off the left side cover.
- Make sure the ignition switch is turned off, and disconnect the regulator 3-pin connector (See Caution – Pg. 174).

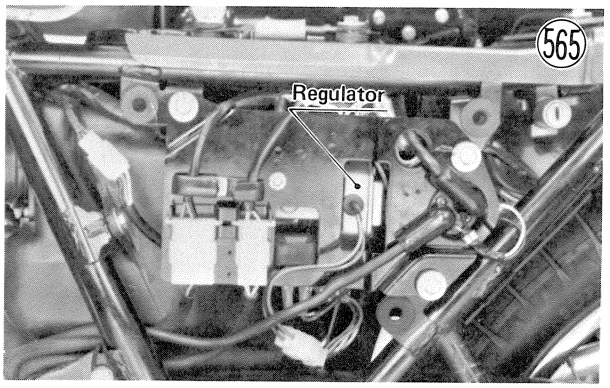

- Using auxiliary leads, connect the regulator black lead to the voltage source – terminal, and connect the regulator brown lead to the voltage source + terminal (Fig. 566).

Regulator Test (Out of Circuit)

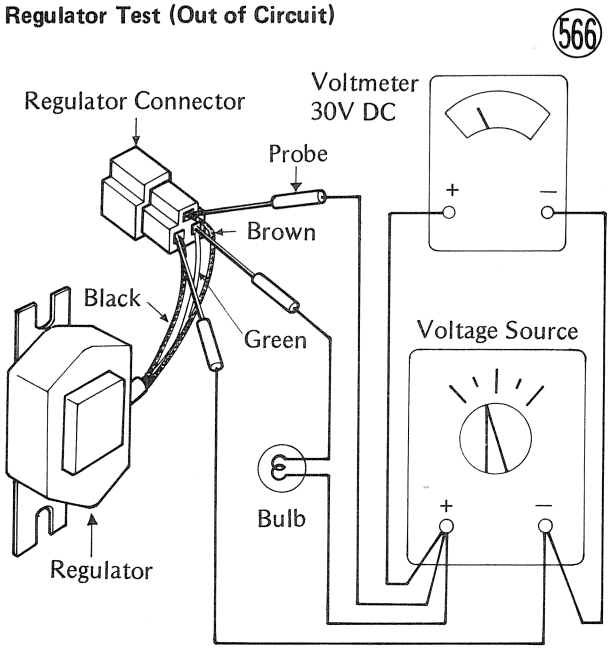

- Connect the bulb between the regulator green lead and the voltage source + terminal.
- Set the multimeter to the 30V DC range, connect the meter – lead to the voltage source – terminal, and connect the meter + lead to the voltage source + terminal.
- When the voltage source is turned on, the bulb should light.
- While gradually increasing the voltage source output from 10 volts to 16 volts, the bulb will go out at a certain point. Note the exact voltage when the bulb goes out.

Table 109 Regulator Test (Out of Circuit)

Meter	Connections	Source	Bulb
30V DC	Meter (+) ↔ Source (+) Meter (–) ↔ Source (–) Black ↔ Source (–) Brown ↔ Source (+) Green ↔ Bulb ↔ Source (+)	Less than 14.0V DC	Lit.
		14.0~15.0V DC	Goes out between this range.
		More than 15.0V DC	Unlit.

- If the regulator is good, the bulb will go out at the voltage shown in Table 109.
- If the above check shows the regulator to be bad, replace it.

BATTERY

The battery supplies the current to the starter motor and serves as a back-up source of power to operate the electrical equipment whenever the engine is turning over too slowly for the dynamo to supply sufficient power.

With proper care, the battery can be expected to last a few years, but it may be completely ruined long before that if it is mistreated. Following a few simple rules will greatly extend the life of the battery.

1. **When the level of the electrolyte in the battery is low, add only distilled water to each cell, until the level is at the upper level line marked on the outside of the battery. Ordinary tap water is not a substitute for distilled water and will shorten the life of the battery.**
2. **Never add sulphuric acid solution to the battery. This will make the electrolyte solution too strong and will ruin the battery within a very short time.**
3. **Avoid quick-charging the battery. A quick-charge will damage the battery plates.**
4. **Never let a good battery stand for more than 30 days without giving it a supplemental charge, and never let a discharged battery stand without charging it. If a battery stands for any length of time, it slowly selfdischarges. Once it is discharged, the plates sulphate (turn white), and the battery will no longer take a charge.**
5. **Keep the battery well charged during cold weather so that the electrolyte does not freeze and crack open the battery. The more discharged the battery becomes, the more easily it freezes.**
6. **Always keep the battery vent hose free of obstruction, and make sure it does not get pinched, crimped, or melted shut by contact with the hot muffler. If battery gases cannot escape through this hose, they will explode the battery.**
7. **DON'T INSTALL THE BATTERY BACKWARDS. The negative side is grounded.**

Electrolyte

The electrolyte is dilute sulphuric acid. The standard specific gravity of the electrolyte in a fully charged battery is 1.280 at 20°C (68°F). The water in this solution changes to a gaseous mixture due to chemical action in the battery and escapes, which concentrates the acid in a charged battery. Consequently, when the level of the electrolyte becomes low, only distilled water should be added. If sulphuric acid is added, the solution will becomes too strong for proper chemical action and will damage the plates. Metal from the damaged plates collects in the bottom of the battery. This sediment will eventually cause an internal short circuit.

The specific gravity of the electrolyte is measured with a hydrometer and is the most accurate indication of the condition of the battery. When using the hydrometer, read the electrolyte level at the bottom of the meniscus (curved surface of the fluid). Fig. 567 shows the relationship between the specific gravity of the solution at 20°C (68°F) and the percentage of battery charge. Since specific gravity varies with temperature, and since the temperature of the solution being checked is likely to be other than 20°C (68°F); the formula given below should be used to compute what the specific gravity will be at any temperature. When the temperature goes up, the specific gravity goes down, and vice versa.

Hydrometer (567)

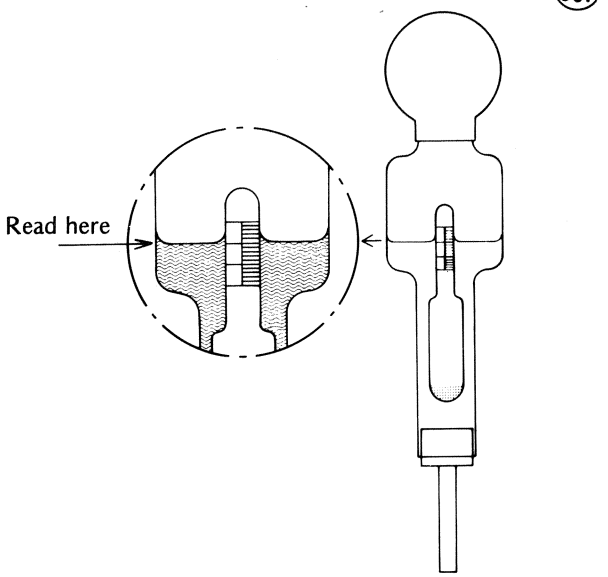

○Celsius

$S_{20}=S_t + [0.0007\ (t-20)]$

○Fahrenheit

$S_{68}=S_t + [0.0004\ (t-68)]$

S_t=specific gravity at the present temperature

S_{20}=specific gravity at 20°C

S_{68}=specific gravity at 68°F

t=present temperature of solution

Generally speaking, a battery should be charged if a specific gravity reading shows it to be discharged to 50% or less of full charge.

Specific Gravity/Battery Charge Relationship (568)

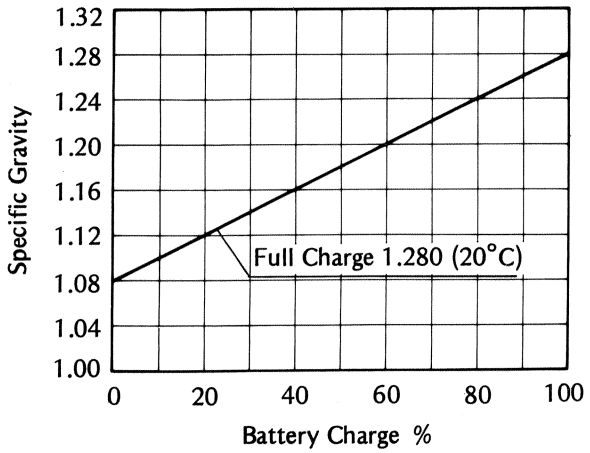

Initial charge

New batteries for Kawasaki motorcycles are dry charged and can be used directly after adding the electrolyte. However, the effect of the dry charge deteriorates somewhat during storage, especially if any air has entered the battery from imperfect sealing. Therefore, it is best to give the battery an initial charge before using it in order to ensure long battery life.

WARNING **Because the battery gives off an explosive gas mixture of hydrogen and oxygen, keep any sparks or open flame away from the battery during charging.**

- Pour a 1.280 (specific gravity at 20°C or 68°F) sulphuric acid solution into each cell of the battery up to the upper level line.
- Let the battery stand for 30 minutes, adding more acid if the level drops during this time.

NOTES:

1. If the temperature of the solution is over 30°C (85°F), cool the solution before pouring it into the battery.
2. After pouring the acid into the battery, start charging the battery within 12 hours.

- Leaving the caps off the cells, connect the battery to a charger, set the charging rate at 1/10 the battery capacity, and charge it for 10 hours. For example, if the battery is rated at 14AH, the charging rate would be 1.4 ampere. If a constant voltage charger is used, the voltage must be adjusted periodically to keep the current at a constant value.

CAUTION **If the temperature of the electrolyte rises above 45°C (115°F) during charging, reduce the charging rate to bring down the temperature, and increase the charging time proportionately.**

- After charging, check the electrolyte level in each cell. If the level has dropped, add distilled water to bring it back up to the upper level line.
- Check the results of charging by measuring the specific gravity of each cell and by measuring battery voltage. Battery voltage of a 12 volt battery directly after the completion of charging should be 15 to 16 volts and the specific gravity of the electrolyte should be more than 1.250. If the voltage is lower than this, the battery is not completely charged or can be no longer take a full charge. If the specific gravity of any one cell is lower than 1.250, there may be damage in the cell.

Ordinary charge

WARNING **Because the battery gives off an explosive gas mixture of hydrogen and oxygen, keep any sparks or open flame away from the battery during charging.**

- Clean off the battery using a solution of baking soda and water. Make especially sure that the terminals are clean.
- If the electrolyte level is low in any cell, fill to over the lower level line but not up to the upper level line since the level rises during charging. Figure the charging rate to be between 1/10 and 3/10 of battery capacity. For example, the maximum charging rate for a 14AH battery would be 3/10 x 14 which equals 4.2 amperes.

CAUTION **Charging the battery at a rate higher than specified above could ruin the battery. Charging at higher rate causes excess heat, which can warp the plates and cause internal shorting. Higher than normal charging rates also cause the plates to shed active material. Deposits will accumulate, and can cause internal shorting.**

- Measure the specific gravity of the electrolyte, and use the graph, Fig. 568, to determine the percentage of discharge. Multiply the capacity of the battery by the percentage of discharge to find the amount of discharge in ampere-hours. Use this figure in the formula below to compute charging time.

$$\text{Charging time (hours)}=\frac{\text{amount of discharge (AH)}}{\text{charging current (A)}} \times 1.2 \sim 1.5$$

- Remove the caps from all the cells, and begin charging the battery at the rate just calculated. If a constant voltage charger is used, the voltage will have to be adjusted periodically to maintain charging current at a constant value.

CAUTION **If the temperature of the electrolyte rises above 45°C (115°F) during charging, reduce the charging rate to bring down the temperature, and increase charging time proportionately.**

- After charging, check the electrolyte level in each cell. If the level has dropped, add distilled water to

Table 110 Battery Troubleshooting Guide

	Good Battery	Suspect Battery	Action
Plates	(+) chocolate color (–) gray	white (sulphated); (+) plates broken or corroded	Replace
Sediment	none, or small amount	sediment up to plates, causing short	Replace
Voltage	above 12 volts	below 12 volts	Test charge
Electrolyte Level	above plates	below top of plates	Fill and test charge
Specific Gravity	above 1.200 in all cells; no two cells more than 0.020 different	below 1.100, or difference of more than 0.020 between two cells	Test charge

bring it back up to the upper level line.

●Check charging results by measuring the specific gravity of each cell and by measuring battery voltage. Battery voltage of a 12 volt battery directly after the completion of charging should be 15 to 16 volts. If the voltage is lower than this, the battery is not completely charged or can no longer take a full charge.

Test charging

When the battery is suspected of being defective, first inspect the points noted in the chart above. The battery

When the battery is suspected of being defective, first inspect the points noted in the chart below. The battery can be restored by charging it with the ordinary charge. If it will take a charge so that the voltage and specific gravity come up to normal, it may be considered good except in the following case:

★ If the voltage suddenly jumps to over 13 volts just after the start of charging, the plates are probably sulphated. A good battery will rise to 12 volts immediately and then gradually go up to 12.5 ~ 13 volts in about 30 to 60 minutes after charging is started.

★ If one cell produces no gas bubbles, or has a very low specific gravity, it is probably shorted.

★ If there does not appear to be enough sediment to short the plates, but one cell has a low specific gravity after the battery is fully charged, the trouble may be just that there is insufficient acid in that cell. In this instance only, sulphuric acid solution may be added to correct the specific gravity.

★ If a fully charged battery not in use loses its charge after 2 to 7 days, or if the specific gravity drops markedly, the battery is defective. The self-discharge rate of a good battery is only about 1% per day.

IGNITION SYSTEM

The ignition system, shown in Fig. 569, consists of the battery, contact breaker, capacitor, ignition coil, and two spark plugs (Pg. 178). The battery supplies the current for the primary circuit, which includes the contact breaker points, capacitor, and the primary winding of the ignition coil. When the points suddenly open with the ignition switch turned on, a surge of electrons is produced in the secondary circuit, which includes the ignition coil secondary winding and the two spark plugs. For this system to function properly, all ignition parts must be in good order, the ignition timing correctly set, the ignition and engine stop switches not shorted, and all wiring in good condition (no shorts or breaks, and no loose or tarnished connections).

Ignition Circuit (569)

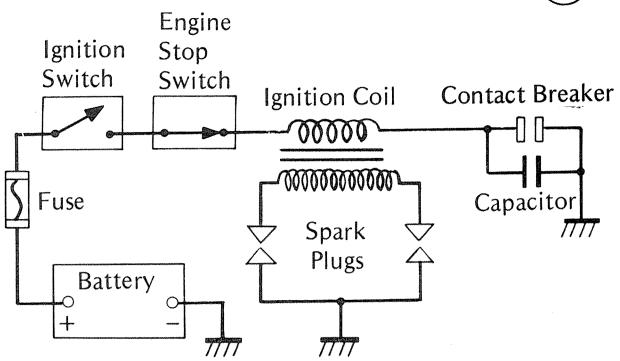

With the ignition switch on and the points closed, current flows in the primary circuit, including the ignition coil primary winding where the magnetic field (which accompanies electron flow) is concentrated (due to the winding). When the points open, this circuit is broken stopping the electron flow and collapsing the magnetic field. As this field collapses, magnetic flux cuts through the secondary winding inducing current in the winding. The voltage of this current, dependent on the number of turns in the secondary winding and the speed of the drop in the primary winding voltage is much greater than the voltage in the primary winding. It is this high voltage that causes a spark to jump across the spark plug electrodes. Since a greater ratio of secondary winding turns over primary winding turns and a sharper drop of primary winding voltage increase the secondary winding voltage that is produced, a certain ratio of turns in the ignition coil has been chosen and a certain voltage drop sharpness (determined by capacitor and breaker point performance) has been designed in the ignition system so that a spark of sufficient but not excessive strength will be produced.

Ordinarily in a 4-stroke engine, a spark jumps across the spark plug electrodes only every other time that the piston for that spark plug rises (once every 720° of crankshaft rotation). This is because between each compression stroke, in which a fuel/air mixture ready for combustion is in the cylinder, there is an exhaust stroke, in which the piston rises only to push out the burned gases. However, even if a spark does jump across

the electrodes during the exhaust stroke, there is no effect since there is no compression and no fuel to burn. Therefore, to eliminate any need for a distributor (thus simplifying the system and making it more reliable), the system is constructed so that both spark plugs fire every time both pistons rise (once every 360° of crankshaft rotation) although one piston is on the compression stroke and the other on the exhaust stroke.

The contact breaker consists of one fixed and one movable contact point. The movable point is pivoted, and the heel on one end is held against the cam surface on the timing advancer by a single leaf spring. As the crankshaft rotates, the heel rides on the cam surface, and, as the crankshaft reaches the position where ignition takes place, the high spot on the cam surface pushed out on the heel, which opens the points. As the heel wears down, the point gap narrows, affecting ignition timing. Consequently, the ignition timing must be periodically adjusted to compensate for heel wear.

The capacitor is connected in parallel across the contact breaker points and serves to prevent current from arcing across the points as they open. Arcing across the points would reduce the sharpness of the voltage drop in the primary winding, thus weakening the spark plug spark, and also damaging the surface of the points. When the points are first opening, the capacitor absorbs a certain amount of current, giving the points time to open far enough apart to where current will not arc across. However, if the capacitor shorts, the current will simply flow through the capacitor whenever the points open. When the capacitor is otherwise defective, the current will not be prevented from arcing across the points at the time of ignition, resulting in poor spark plug performance and burned and pitted points.

Because the two spark plugs are connected in series, the current through one spark plug must go also through the other. Consequently, if a spark will not jump across the electrodes on one spark plug (due to dirty electrodes, faulty plug lead, etc.), no spark will jump across the electrodes on the other plug as well.

Contact breaker inspection

When the points become dirty, pitted, or burned, or if the spring weakens, the points will not make the contact necessary to produce a good spark, resulting in unstable idling, misfiring, or the engine not running at all. Inspect the contact breaker in accordance with the Periodic Maintenance Chart (Pg. 195), and repair or replace if necessary.

Clean the points with clean paper or cloth using an oil-free solvent. A business card soaked in trichloroethylene can be used to remove traces of oil. To repair light damage, use emery cloth or an oilstone. If the points are badly worn down or damaged, or if the spring is weak, replace the contact breaker.

Whenever the contact breaker is inspected or replaced, apply a small amount of point cam grease to the felt to lubricate the cam. This will minimize wear of the contact breaker heel. Be careful not to apply so much grease that it can drop off or be thrown onto the points, which will cause the points to foul and burn.

Capacitor inspection

The capacitor can usually be considered to be defective if a long spark is seen arcing across the points as they open or if the points are burned or pitted for no apparent reason. Replace the capacitor any time it appears defective and whenever the contact breaker is replaced.

NOTE: For checking with a capacitor tester, capacitor specifications are: 0.22±0.02μF, 1,000 WVDC.

Capacitor Test

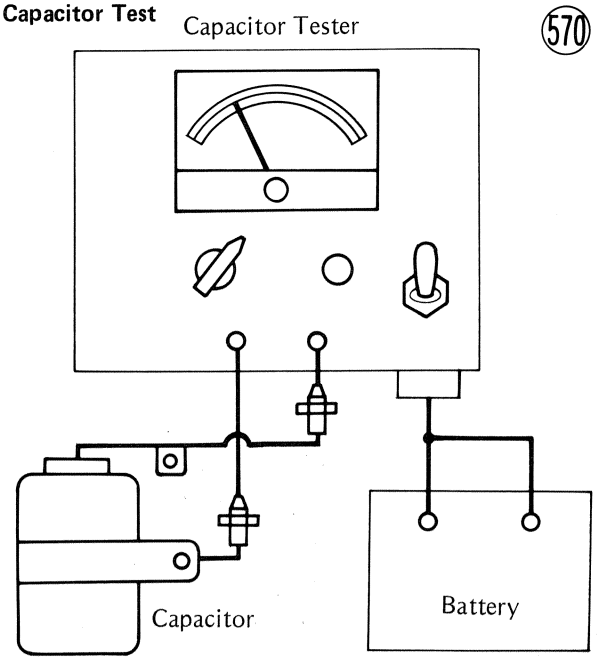

Ignition coil inspection

The most accurate test for determining the condition of the ignition coil is made with the Kawasaki electrotester. The ignition coil must be connected to the tester in accordance to the tester directions and should produce at least a 5 mm spark. Since an electrotester other than the Kawasaki electrotester may produce a different arcing distance, the Kawasaki electrotester is recommended for a reliable result.

Ignition Test

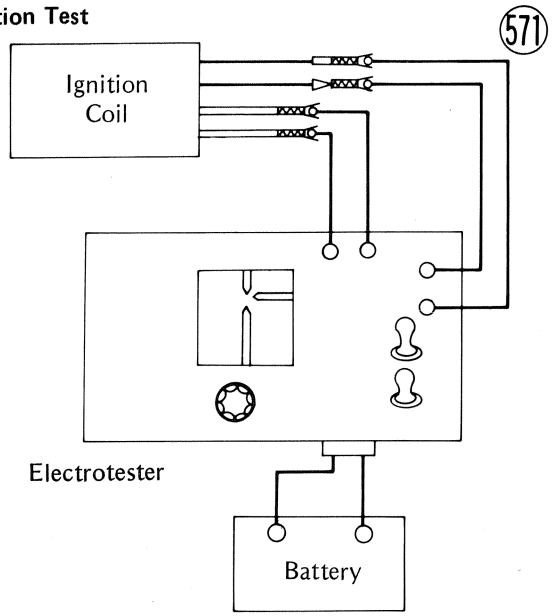

If an electrotester is not available, the coil can be checked for a broken or a badly shorted winding with an ohmmeter. However, an ohmmeter cannot detect layer shorts and shorts resulting from insulation breakdown under high voltage.

To measure the primary winding resistance, set the ohmmeter to the R x 1 range, and ocnnect one ohmmeter lead to the red/yellow lead and the other to the blue lead from the ignition coil. To measure the secondary winding resistance, set the ohmmeter to the R x 100 range, and connect one ohmmeter lead to one of the spark plug leads and the other ohmmeter lead to the remaining spark plug lead.



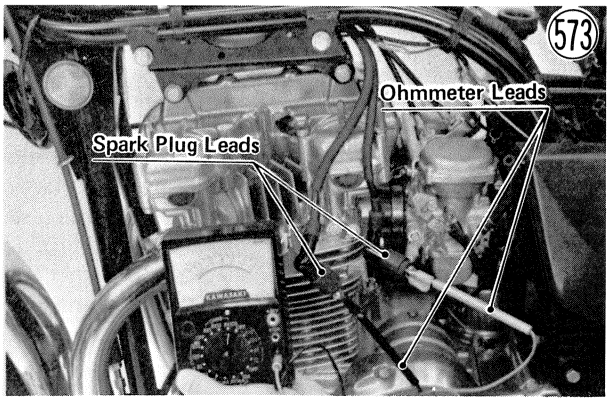

Table 111 Ignition Coil Resistance

	Meter	Read
Primary Winding	R x 1	3.2~4.8 Ω
Secondary Winding	R x 100	10.4~15.6 kΩ

If the coil does not produce an adequate spark, or if either the primary or secondary winding does not have the correct resistance, replace the ignition coil.

With the highest ohmmeter range, check for continuity between the red/yellow lead and the coil core and between the plug leads and the coil core. If there is any reading, the coil is shorted and must be replaced. Also, replace the ignition coil if either spark plug lead shows visible damage.

TIMING ADVANCER

The timing advancer is a device that advances the ignition timing (makes the spark plugs fire sooner) as engine rpm rises. It consists of two weights and two springs connected to the timing cam that opens the contact breaker points. The more the engine speed rises, the further the weights are thrown out against spring tension, turning the cam in the direction of crankshaft rotation and causing the points to open sooner.

If the mechanism is damaged, has weak or broken spring(s), or does not move smoothly, the ignition timing will not advance smoothly or it may stick in one position. This will result in incorrect timing at certain engine speeds, causing poor engine performance. Failure to advance at all will cause poor high speed performance, and excessive advance will cause knocking and poor low speed performance.

Ignition Timing/Engine rpm Relationship

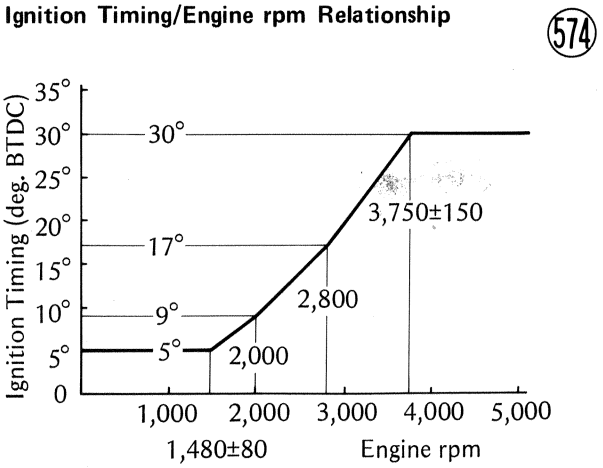

Inspection and lubrication

Remove the timing advancer (Pg. 52), and check that the mechanism moves smoothly by hand and that no parts are visually worn or damaged. Periodically wipe the advancer clean, apply oil to it, and fill the groove in the advancer with grease.

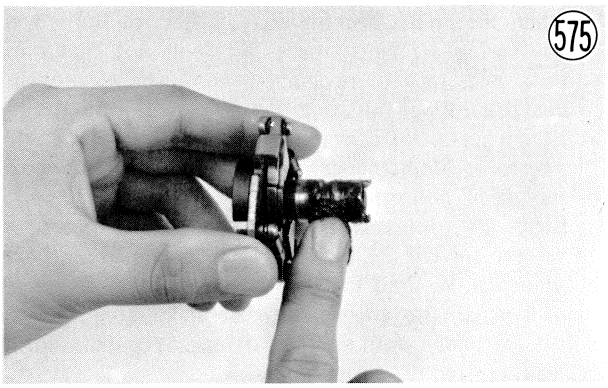

Install the advancer (Pg. 52), adjust the timing (Pg. 9), and check it with a strobe light for both low and high speed operation (Pg. 9). If the timing differs from that which is shown in the graph (Fig. 574), replace the timing advancer with a new one.

SPARK PLUGS

The spark plugs ignite the fuel/air mixture in the combustion chamber. To do this effectively and at the proper time, the correct spark plugs must be used, and the spark plugs must be kept clean and adjusted.

Spark Plug (576)

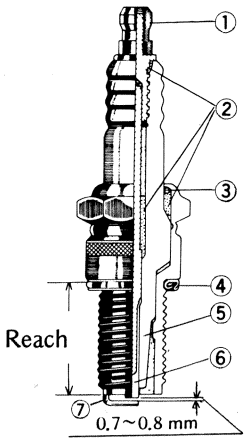

1. Terminal
2. Cement
3. Wire Ring
4. Gasket
5. Insulator
6. Center Electrode
7. Side Electrode

Tests have shown the NGK B8ES or ND W24ES, set to a 0.7~0.8 mm gap to be the best plug for general use. But since spark plug requirements change with ignition and carburetion adjustments and with riding conditions, this plug may have to be replaced with one of the next higher or lower heat range. Whether or not a spark plug of a different heat range should be used is generally determined by removing and inspecting the plug.

NOTE: For 1978 and later models NGK B6ES or ND W20ES-U is equipped as a standard plug. If the ceramic insulator around the center electrode is burned white, the plugs should be replaced with the next colder type.

When a plug of the correct heat range is being used, the electrodes will stay hot enough to keep all the carbon burned off, but cool enough to keep from damaging the engine and the plug itself. This temperature is about 400 ~ 800°C (750 ~ 1,450°F) and can be judged by noting the condition and color of the ceramic insulator around the center electrode. If the ceramic is clean and of a light brown color, the plug is operating at the right temperature.

A spark plug for higher operating temperatures is used for racing and other high speed applications. Such a plug is designed for better cooling efficiency so that it will not overheat and thus is often called a "colder" plug. If a spark plug with too high a heat range is used – that is, a "cold" plug that cools itself too well – the plug will stay too cool to burn off the carbon, and the carbon will collect on the electrodes and the ceramic insulator. This carbon conducts electricity, and can short the center electrode to ground by either coating the ceramic insulator or bridging across the gap. Such a short will prevent an effective spark. Carbon build-up on the plug can also cause other troubles: it can heat up red-hot and cause preignition and knocking and may eventually burn a hole in the top of the piston.

A spark plug in the lower heat range is used when engine temperature is comparatively low such as for constant city use or during the break-in period. Such a plug is designed to hold the heat and thus is often referred to as a "hotter" plug. If a "hot" plug is used for racing or other high speed use, the plug will run too hot, causing engine overheating, preignition and knocking, which may burn a hole in the piston.

Inspection and replacement

Remove each plug and inspect the ceramic insulator. Whether or not the right temperature plug is being used can be ascertained by noting the condition of the ceramic insulator around the electrode. A light brown color indicates the correct plug is being used. If the ceramic is black, it indicates that the plug is firing at too low a temperature, so the next hotter type (NGK B7ES) should be used instead. If the ceramic is white, the plug is operating at too high a remperature and it should be replaced with the next colder type (NGK B9ES).

The heat range of the spark plug functions like a thermostat for the engine. Using the wrong type of spark plug can make the engine run too hot (resulting in engine damage) or too cold (with poor performance, misfiring, and stalling). The standard plug has been selected to match the normal usage of this motorcycle in combined street and highway riding. Unusual riding conditions may require a different spark plug heat range. For extended high speed riding, install the NGK B9ES plug (colder). For constant low speed riding, it may be necessary to use NGK B7ES plug (hotter) to avoid fouling. This is especially true during the break-in period, where engine speed must be limited to insure long engine life.

CAUTION **If the spark plugs are replaced with a type other than those mentioned below, make certain the replacement plugs have the same thread pitch and reach (length of threaded portion) as the standard plugs.**

Spark Plug Condition (577)

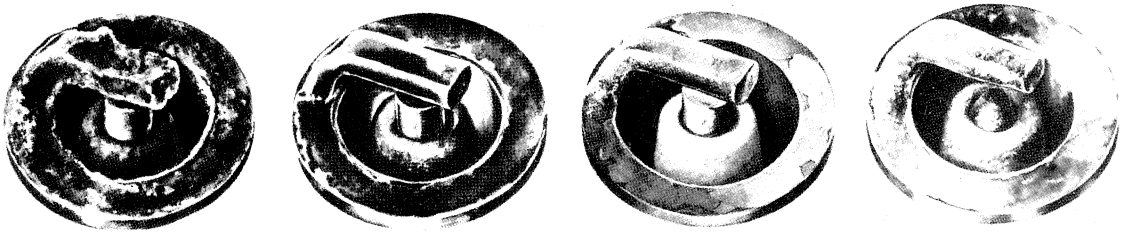

Carbon Fouling | Oil Fouling | Normal Operation | Overheating

Table 112 Spark Plug Specifications

Required plug threads	NGK Number (ND Number)	Riding Conditions
14 mm diameter 19.0 mm reach	B7ES (hot)	Low Speed
	B8ES (W24ES) (standard)	Normal Riding
	B9ES (cold)	Racing

If the plug reach is too short, carbon will bluid up on the plug hole threads in the cylinder head, causing overheating and making it very difficult to insert the correct spark plug later.

If the reach is too long, carbon will build up on the exposed spark plug threads causing overheating, preignition, and possible burning a hole in the piston top. In addition, it may be impossible to remove the plug without damaging the cylinder head.

Plug Reach

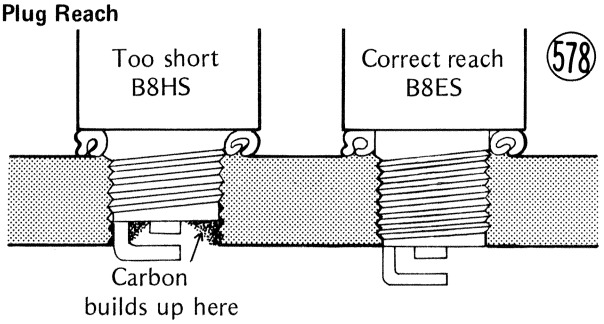

STARTER MOTOR CIRCUIT

The starter motor circuit includes the starter button (switch), starter relay, battery, and starter motor. When the ignition switch is on and the starter button is pushed, a small amount of current flows through the switch and the relay coil. This current magnetizes the relay core, which then pulls the armature to it, closing the relay contacts. The closed contacts complete a circuit for the starter motor, and the motor turns. The reason for using a relay instead of using the switch to turn on the starter motor directly is that the starter motor requires much current – enough that relatively thick wire is necessary to carry the current to the starter motor. Because it is not practical to put a heavy switch on the handlebar and have large wires running to it, the starter switch is made to carry just the light relay coil current, and heavy contacts inside the relay carry the starter motor current.

CAUTION Because of the large amount of current, never keep the starter button pushed any time that the starter motor will not turn over, or the current may burn out the starter motor windings.

Starter Motor Circuit

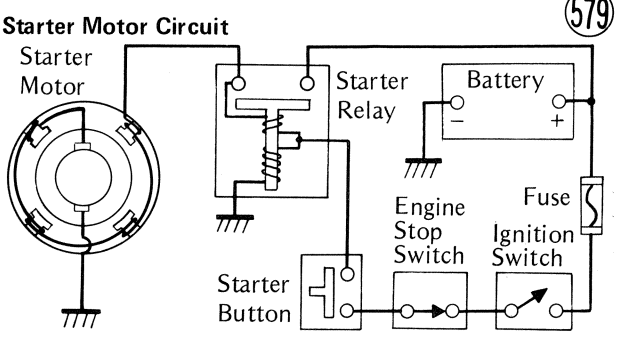

The starter motor is installed with a sprocket and chain arrangement to transmit starter motor rotation to the crankshaft. In place of the solenoid used in automobiles, a clutch (Pg. 185) disengages the starter motor once the engine starts.

Fig. 581 shows starter motor construction. The field coils ⑮ are wound around four cores ⑫, forming the yoke ⑪, and the armature windings ⑬ are connected to the commutator ⑲ and receive their current through the brushes ⑰. If the brushes are not making good contact, no starter motor current will flow at all since the field coils and armature windings are connected in series, and the motor will not turn over. A short or open in a coil or winding may also cause the motor to be inoperative. Particles from brush wear may be another cause of starter motor failure; these particles may get onto the bearing at the rear of the motor, causing heat seizure.

A planetary gear train is provided at the output side of the starter motor. The planetary gear train consists of an internal gear ⑦, two planet pinions ⑧, and a sun gear ⑨. These gears reduce the rotational speed of the armature to give more power to the output shaft. The internal gear is pushed toward the end plate by tension of the plate spring ⑤, and is held between the gear holder ⑥ and the end plate by friction. This friction-held internal gear mechanism is to protect the electric starter mechanism from abnormal stress caused by kick back for example. That is, if the starter mechanism sufferes abnormal torque, the internal gear skids between the gear holder and the end plate. Thus, stress greater than the internal gear friction is absorbed by this friction.

Carbon brushes

Worn brushes or weak springs will cause poor brush contact.

Measure the length of the brushes, and replace both if either one is worn down to less than the service limit.

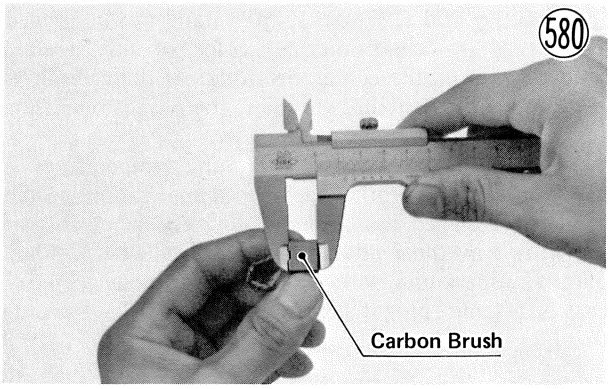

Table 113 Starter Motor Brush Length

Standard	Service Limit
12.0~13.0 mm	6 mm

Brush spring

Spring tension should be 560~680 grams but a spring can be considered serviceable if it will snap the brush firmly into place.

Starter Motor Construction

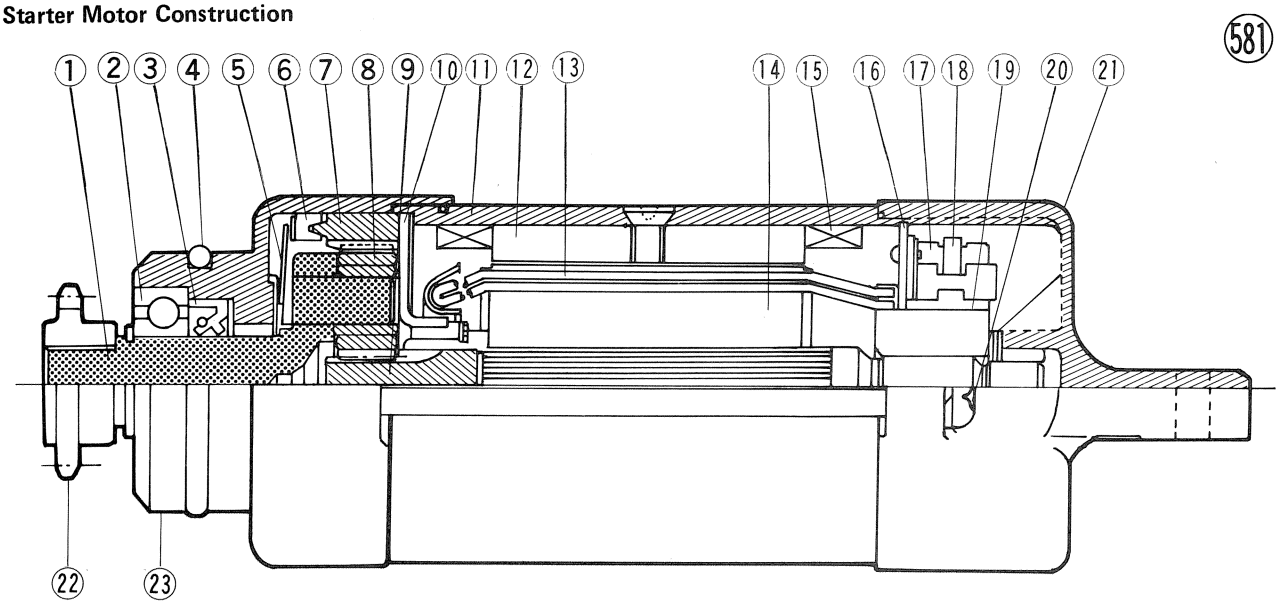

1. Output Shaft
2. Ball Bearing
3. Grease Seal
4. O Ring
5. Plate Spring
6. Internal Gear Holder
7. Internal Gear
8. Planet Pinion
9. Sun Gear
10. End Plate
11. Yoke Assembly
12. Cores
13. Armature Winding
14. Armature
15. Field Coil
16. Brush Plate
17. Carbon Brush
18. Spring
19. Commutator
20. Screw
21. End Cover
22. Starter Motor Sprocket
23. End Cover

Commutator

A dirty or damaged commutator will result in poor brush contact and cause the brushes to wear down quickly. In addition, particles from brush wear accumulating between commutator segments may cause partial shorts.

Correct the commutator surface if necessary with fine emery cloth, and clean out the grooves as illustrated. Determine as accurately as possible the depth of the grooves between commutator segments. Replace the armature with a new one if the groove depth is less than the service limit.

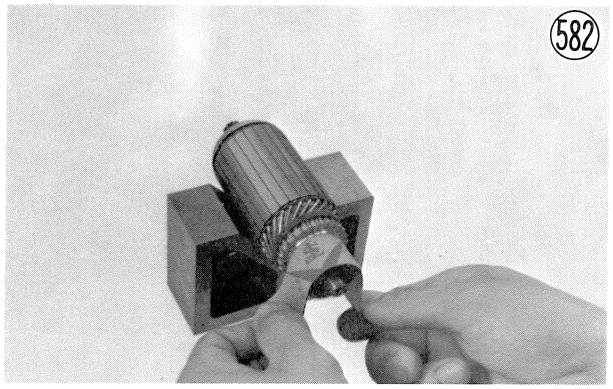

Table 114 Commutator Groove Depth

Standard	Service Limit
0.5~0.8 mm	0.2 mm

Commutator

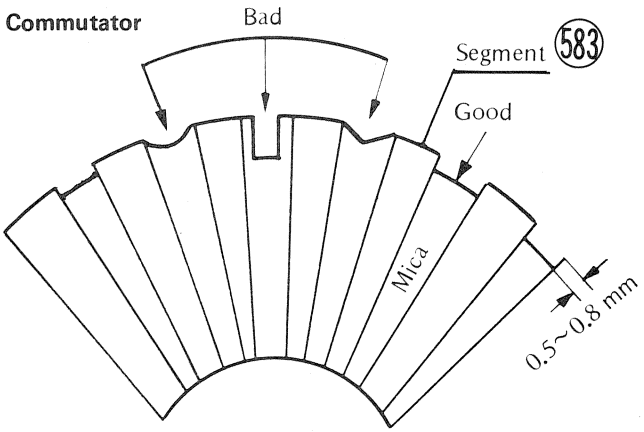

Using the R x 1 ohmmeter range, measure the resistance between any two commutator segments. If there is a high resistance or no reading between any two segments, a winding is open and the armature must be replaced.

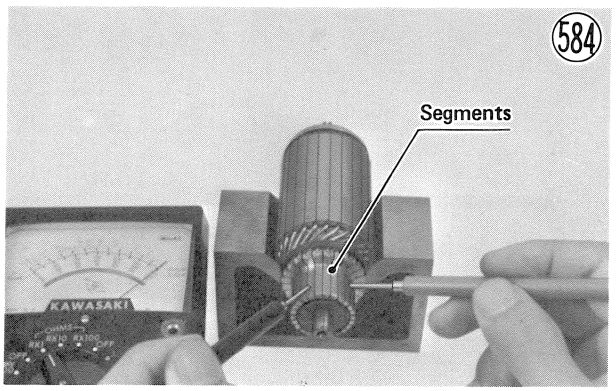

Using the highest ohmmeter range, measure the resistance between the commutator and the shaft. If there is any reading at all, the armature has a short and must be replaced.

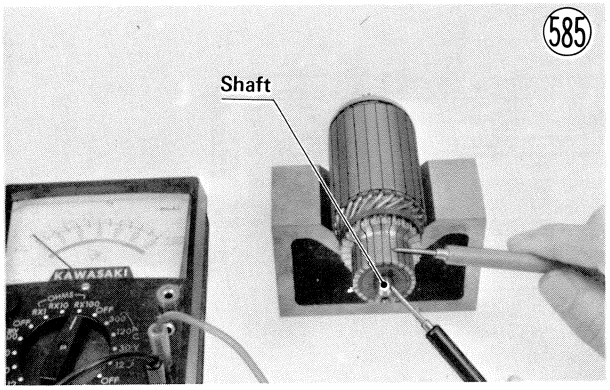

Even if the foregoing checks show the armature to be good, it may be defective in some manner not readily detectable with an ohmmeter. If all other starter motor and starter motor circuit components check good, but the starter motor still does not turn over or only turns over weakly, replace the armature with a new one.

Field coils

Using the R x 1 ohmmeter range, measure the resistance between the + side carbon brush and the starter motor terminal. If there is not close to zero ohms, the field coils have an open and the yoke assembly must be replaced.

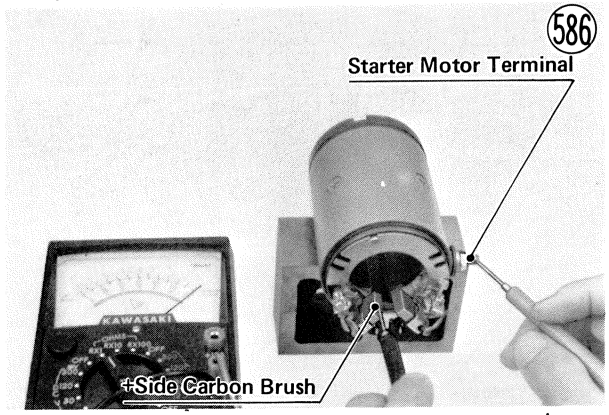

Using the highest ohmmeter range, measure the resistance between the + side carbon brush and the yoke (housing). If there is any meter reading, the coils are shorted to ground and the yoke assembly must be replaced.

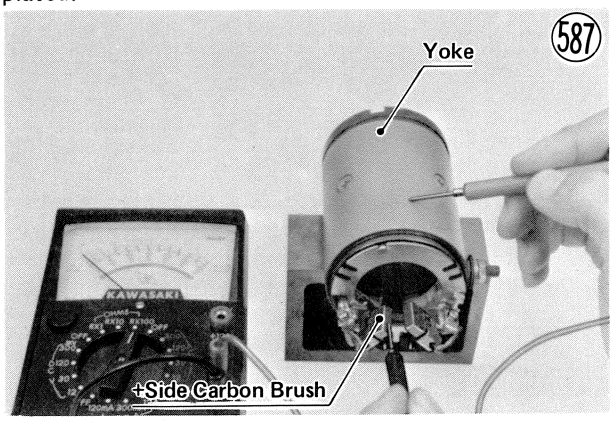

Starter relay

Disconnect the starter motor lead from the starter relay, and connect an ohmmeter set to the R x 1 range across the relay terminals. Push the starter button, and see if the meter reads zero ohms. If the relay makes a single clicking sound and the meter reads zero, the relay is good. If the relay clicks but the meter does not read zero, the relay is defective and must be replaced.

Starter Relay Contact Test

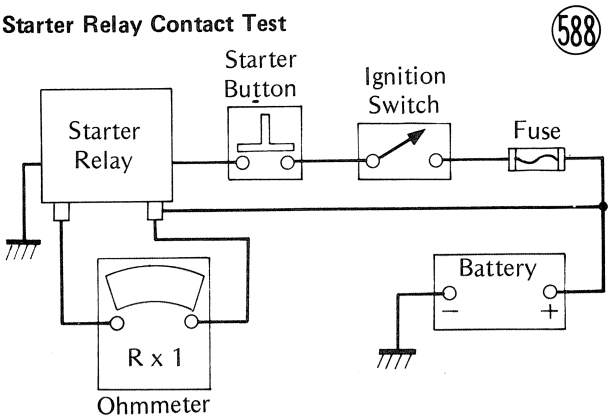

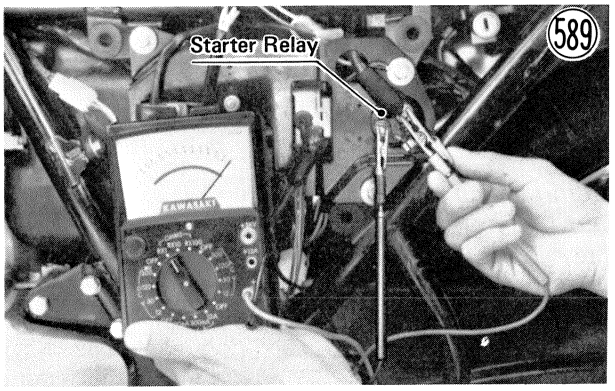

If the relay does not click at all, disconnect the other two leads (black and yellow/red), and measure the resistance across them. If the resistance is not close to zero ohms, the relay is defective.

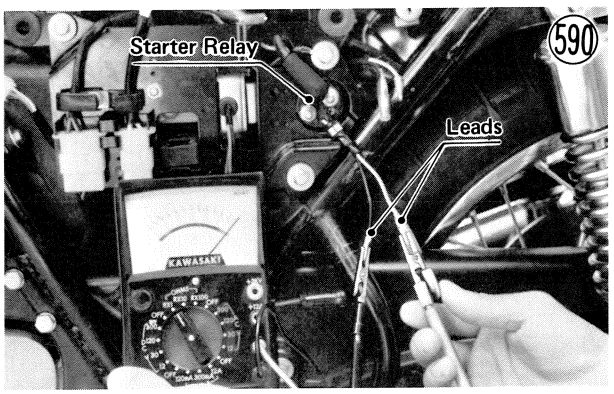

However, if there is zero ohms resistance, the relay may be good; check that there is actually voltage to the relay before deciding that the relay is defective. To check for the voltage, first turn the meter to 30V DC, connect the – meter lead to the yellow/red lead which

was disconnected from the relay, and connect the + meter lead to the black lead. When the starter button is pushed, the meter should read battery voltage. If it does not there is wiring trouble. If the meter reads battery voltage but the relay does not click, the relay is defective.

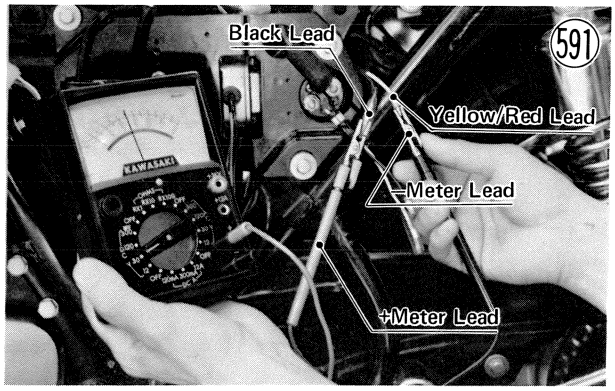

STARTER MOTOR CLUTCH, CHAIN

Fig. 592 shows starter motor clutch construction. The clutch body ② is fixed to the crankshaft ⑥ through the dynamo rotor. Springs ⑤ are incorporated, to assist in the functioning of the unit as a clutch. When the starter clutch sprocket ① rotates in the direction of the arrow, each of the three rollers ③ is wedged into the more narrow space between the clutch body and the starter clutch sprocket hub (the portion jutting out from the sprocket), thereby locking the clutch body and starter clutch sprocket together. With these two locked, starter motor rotation is transmitted to the crankshaft through the starter chain, starter clutch sprocket, rollers, clutch body, and rotor.

When the engine starts, friction with the starter clutch sprocket (and at higher speeds, inertia) moves the rollers back against the tnesion of their springs so that they no longer serve as wedges locking the clutch body and starter clutch sprocket together. In this manner, the engine rotates freely without forcing the starter motor to turn with it.

If the rollers or the starter clutch sprocket hub becomes damaged or worn, the rollers may lock in place so that the starter motor will not disengage when the engine starts. On the other hand, roller or sprocket hub damage could prevent the clutch from engaging properly, causing the starter motor to run freely without transmitting rotation.

Starter Clutch

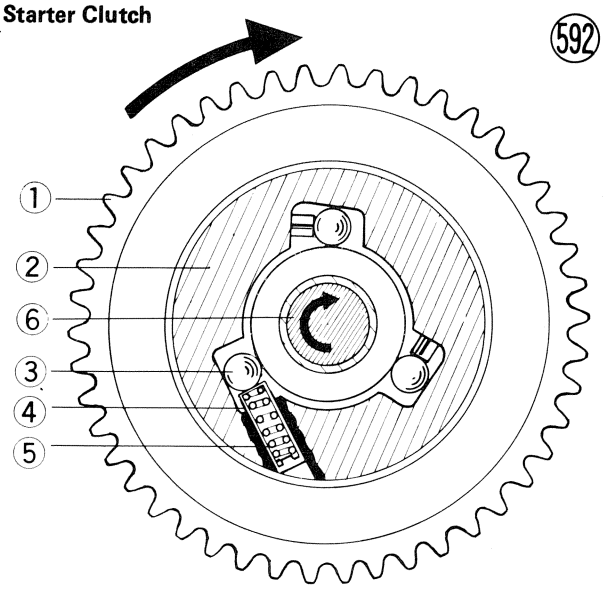

1. Sprocket
2. Clutch Body
3. Roller
4. Spring Cap
5. Spring
6. Crankshaft

Clutch inspection

Turn off the ignition switch and disconnect the battery negative lead from the battery. Remove the dynamo cover.

NOTE: Some engine oil will be spilled by dynamo cover removal. After installing the cover, check the engine oil level and add engine oil as necessary.

Turn the dynamo rotor using the dynamo rotor holder (special tool), and check the starter motor clutch operation. When turning the rotor counterclockwise, the starter clutch sprocket should turn with the rotor, but, when turning the rotor clockwise, the sprocket should not turn. If the clutch does not operate as it should or if it makes noise, disassemble the starter clutch (Pg. 48), examine each part visually, and replace any worn or damaged parts.

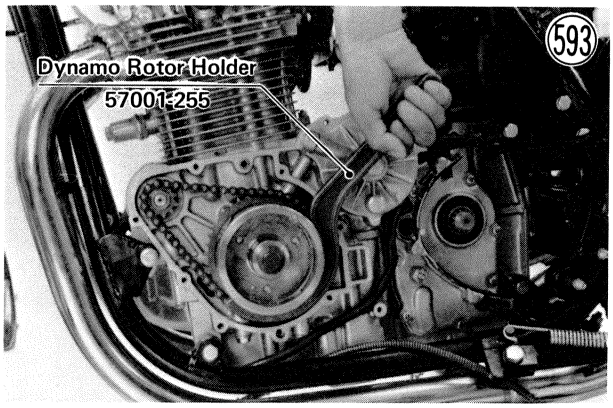

Starter chain inspection

Remove the starter chain (Pg. 49), hold the chain taut with a force of about 5 kg in some manner such as the one shown in Fig. 594, and measure a 20-link length. Since the chain may wear unevenly, take measurements at several places. If any measurement exceeds the service limit, replace the chain.

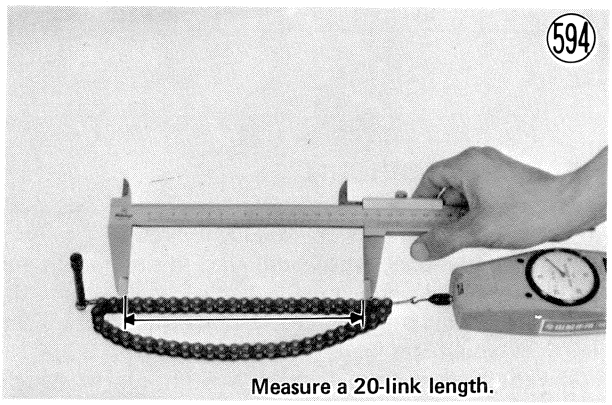

Table 115 Starter Chain 20-link Length

Standard	Service Limit
190.5~190.9 mm	193.4 mm

IGNITION SWITCH

The ignition switch has three positions: off, on and park. In the off position all circuits are turned off and the key can be removed from the switch. In the on position the motorcycle can be started and all electrical equipment can be used. The key cannot be removed from the switch when it is in this position. In the park position the tail light is on, but all other circuits are cut off and the key can be removed from the switch. This provides added visibility when the motorcycle is parked.

Testing the switch

NOTE: See Pg. 222 for 1978 and later model.

Table 116 shows the internal connections of the ignition switch for each switch position. To check the switch, disconnect the plug (4-pin) from the switch, and use an ohmmeter to verify that all the connections listed in the table are making contact (zero ohms between those wires), and that no other wires are connected. If there are any opens or shorts in the switch, replace it with a new one.

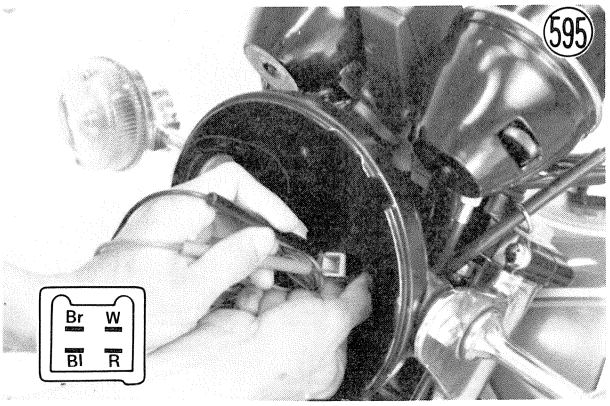

Table 116 Ignition Switch Connection

Color	White	Brown	Blue	Red
OFF				
ON	●	●	●	
PK	●			●
Lead	BAT	IG	TL1	TL2

HEADLIGHT CIRCUIT

Fig. 597 and Fig. 598 are US, Canada and European model wiring diagram of the headlight circuit.

In the US model, when both the ignition switch and headlight switch are turned to the on position the headlight circuit is completed, turning on the headlight, tail light, and meter lights.

In the Canada model, there is no headlight switch, and when the ignition switch is turned on, the headlight circuit is completed.

In the European model, the center CL (po) position of the headlight switch turns on the small city light, tail light and meter lights for driving in the city after dark. When the switch is turned to the on position, the headlight illuminates and the city light stays on. As explained previously, high and low beam can be selected only when the headlight switch is in the on position.

In the European model, there is also a passing and horn button. This button is spring loaded and when the button is pushed to pass, the high beam light (but not the tail light) comes on as a passing signal to the driver of the vehicle ahead. The passing button will light the high beam light regardless of the headlight switch position, and the button will spring back and turn the light off as soon as it is released.

Headlight trouble

If the headlight does not light, check to see if the bulb has burned out or fuses have blown. If the bulb on the US or Canada model has burned out, the sealed beam unit must be repalced. A blown fuse should be replaced. On the European model the headlight or the city light can be replaced separately, as the headlight is of semi-sealed construction. If the bulb and fuses are good, check the dimmer switch and the headlight switch. Tables 117, 118, and 119 show the connections in the dimmer switch for both high and low beam, and the connections in the headlight switch. Disconnect the plug (6-pin) and blue lead to the dimmer switch or the plug (4-pin) and blue/white lead to the headlight switch (not on Canada model), and use an ohmmeter to see that only the connections shown in the table have continuity (zero ohms). If the switch has an open or a short, it can be disassembled for repair. The contact surfaces may be cleaned, but no internal parts are available for replacement. If any parts are not repairable, the switch must be replaced as a unit. If the procedure above does not remedy the problem, check the ignition switch, the wiring, and the dynamo.

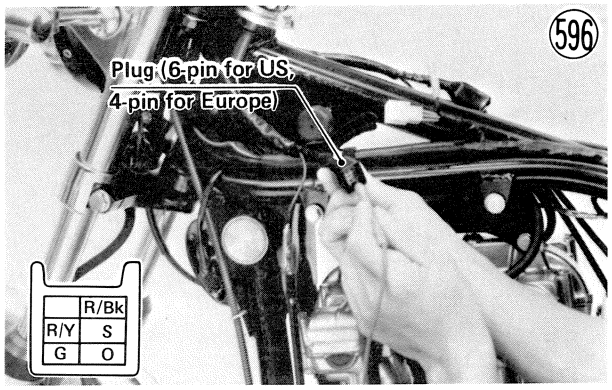

Table 117 Dimmeter Switch Connection

	Red/Black	Blue	Red/Yellow
Hi	●	●	
Lo		●	●

Headlight Circuit (US, Canada Model)

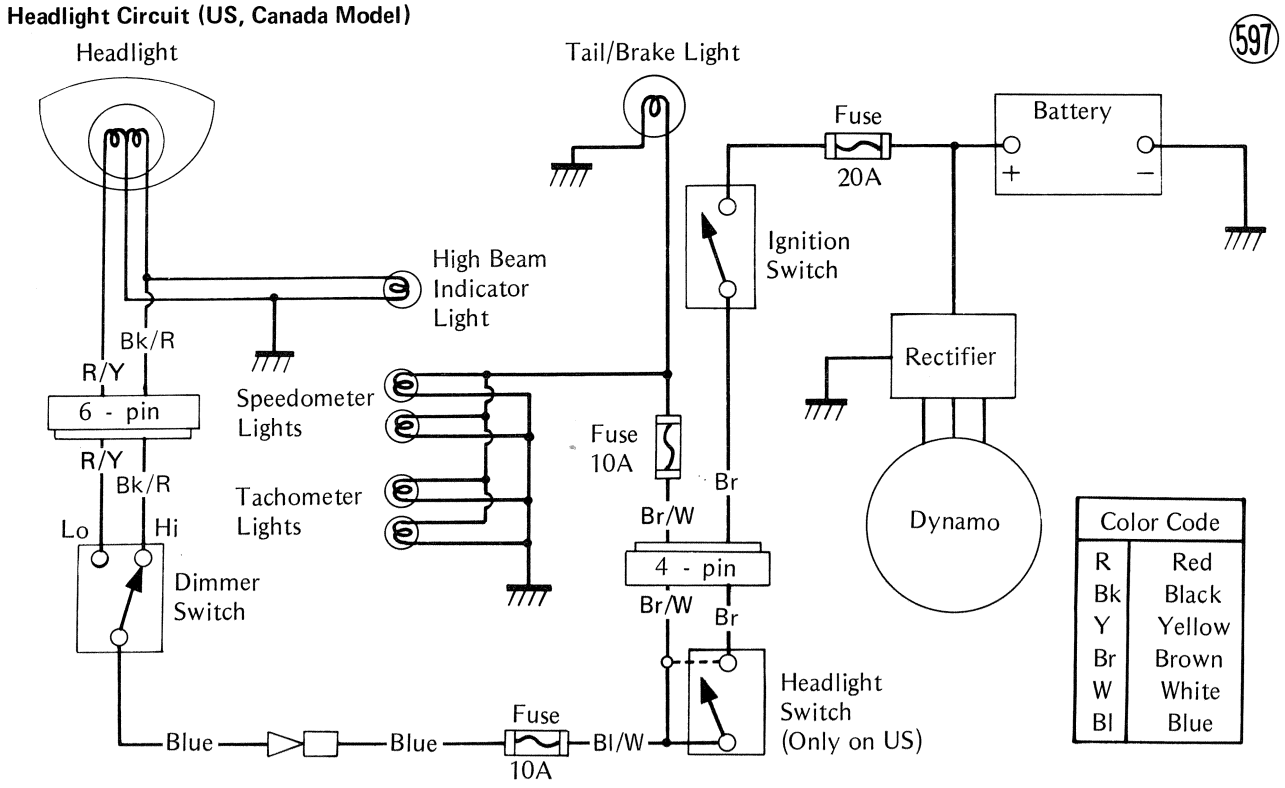

Headlight Circuit (European model)

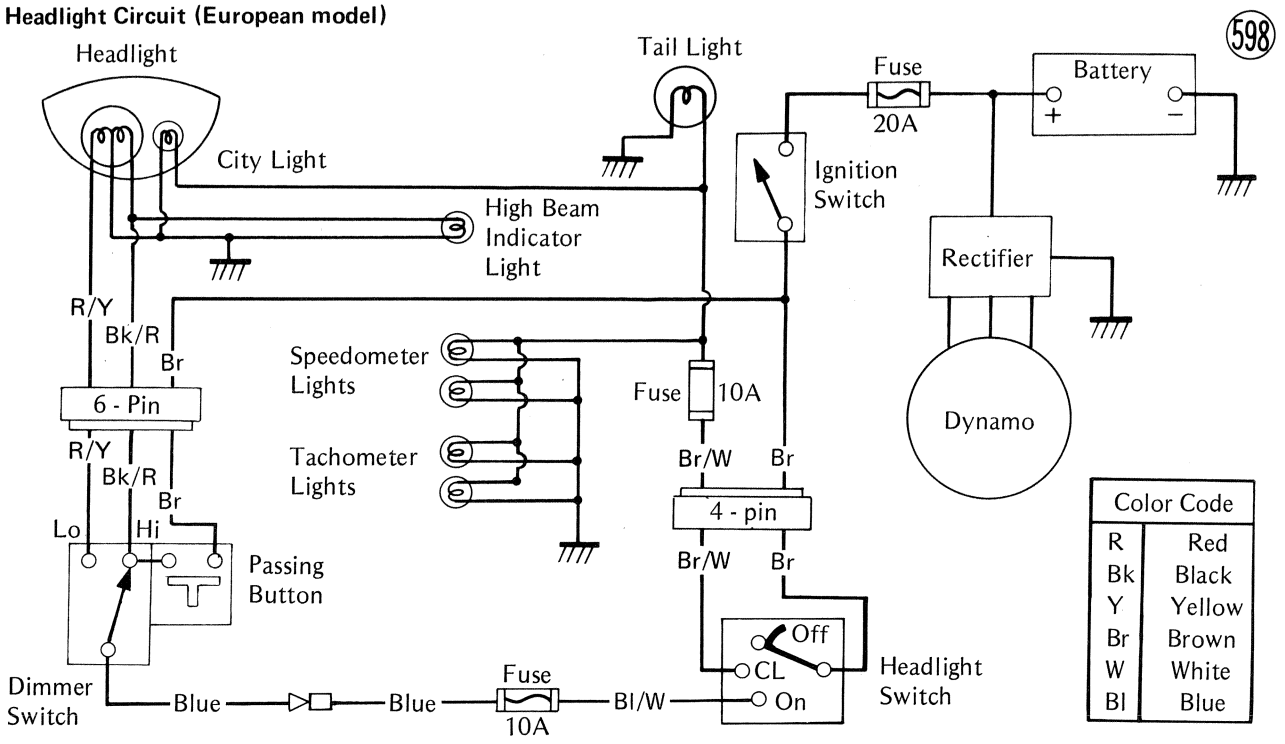

Table 118 Headlight Switch Connection (US Model)

Color	Brown	Blue/White
OFF		
ON	●	●

Table 119 Headlight Switch Connection (European Model)

Color	Brown	Brown/White	Blue/White
OFF			
PO	●	●	
ON	●	●	●

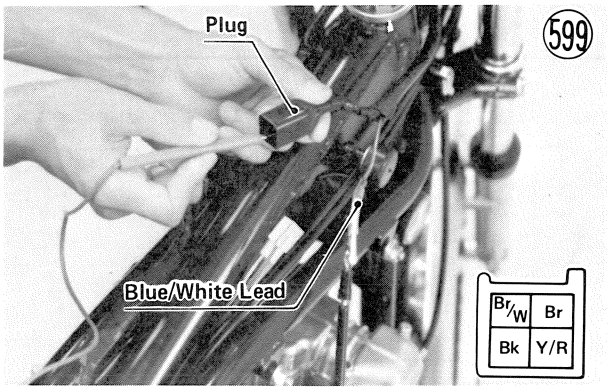

599

If the headlight lights but does not light brightly, the trouble may be that the headlight is of improper wattage or the dynamo is not supplying sufficient current. However, the trouble may also be caused by a short or a component drawing too much current in some other part of the electrical system.

Tail light trouble

If the tail light does not go on when the circuit is closed, the filament is probable burned out. However, if the bulb is good, check the fuses, wiring, ignition switch, headlight switch fuse and battery.

BRAKE LIGHT CIRCUIT

The brake light circuit is shown in Fig. 600. When the ignition switch is turned on, the brake light goes on whenever the circuit is closed by either the front or rear brake light switch. The same bulb is used for both the brake and tail lights as explained in the preceding section.

The front brake light switch is a pressure switch installed in the brake fluid line, and is operated by fluid pressure when the brake lever is pulled. The front brake light switch never requires adjustment and so is not designed to be adjusted. It can not be disassembled for repair and must be replaced when defective.

The rear brake light switch is a plunger type switch actuated by a spring attached to the rear brake pedal. It can be adjusted by changing its position higher or lower in the mounting bracket (See Pg. 19).

The brake light failure indicator switch is in the brake light circuit as a warning device to indicate during vehicle operation whether or not the brake light is functioning properly. Brake light failure may be due to a burned out bulb or some other failure in the brake light circuit.

Brake light circuit inspection involves the front brake light switch, rear brake light switch, brake light, brake light failure indicator switch, brake light failure indicator light, and wiring.

Brake Light Circuit

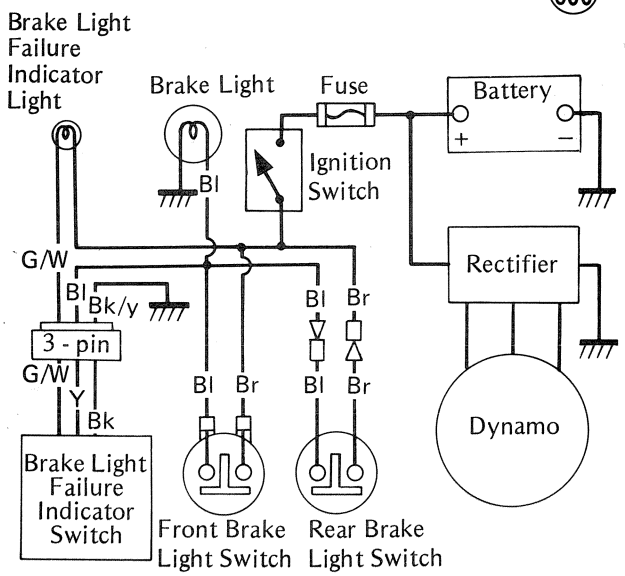

600

Front brake light switch inspection

- Disconnect the front brake light switch leads from the switch.
- Set an ohmmeter to the R x 1 range, connect the meter to the switch terminals, and determine whether or not there is continuity whenever the front brake lever is squeezed. If there is no continuity, replace the switch.

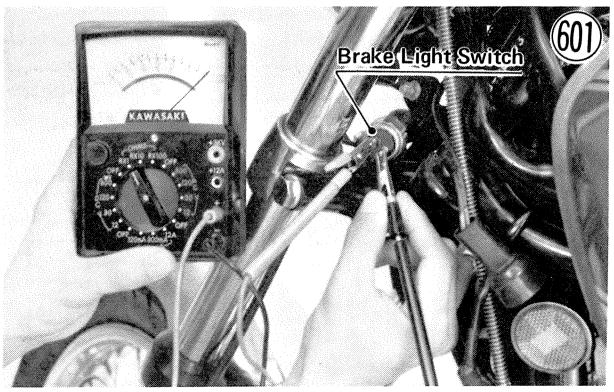

601

NOTE (when the front brake light switch is replaced with a new one):

1. If brake fluid spills when the switch is replaced, painted or chromed surfaces may become damaged. If any fluid spills on the fender or elsewhere, wipe it up immediately.
2. Apply a small amount of a non-permanent locking agent to the switch threads before mounting the switch. However, so that no locking agent will get mixed in with the brake fluid, do not apply any on the lower fourth of the threads.
3. After the switch has been installed, bleed the front brake lines.

Rear brake light switch inspection

- Disconnect the rear brake light switch leads under the fuel tank.

●Inspect in the same way that the front brake light switch was inspected. If there is no continuity whenever the rear brake pedal is depressed, replace the switch.

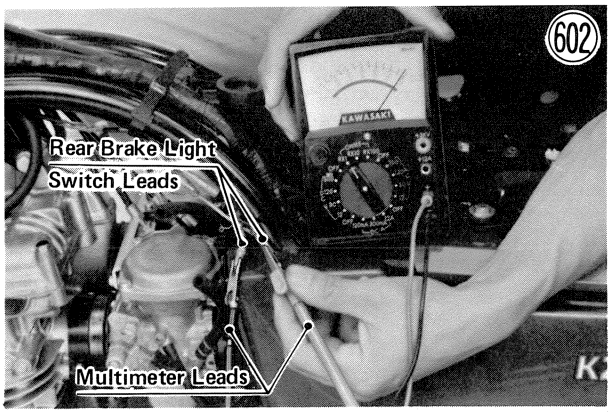

Brake light failure indicator switch inspection

Turn on the ignition switch. Watching the indicator light, apply and then release either brake. Next, with the tail/brake light bulb removed, do the same above. If the indicator lights as shown in Table 120, the brake light failure indicator switch and brake light circuit are functioning properly.

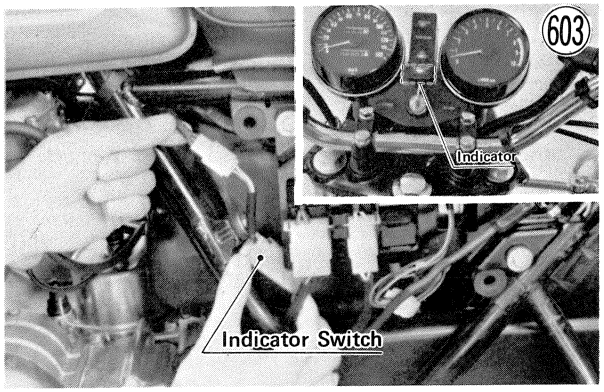

Table 120 Brake Light Failure Indicator Switch Test

		Brake Lever or Pedal	
		Applied	Released
Tail/Brake Light Bulb	In place	Goes on	Goes off
	Out of place	Goes on	Flashes

If the brake light failure indicator does not function properly, find out whether the brake light wiring is defective or the failure indicator switch is defective. The easiest way to test the failure indicator switch is to install and check the suspect switch on a motorcycle with a known good brake light circuit. When this method is impossible, check the circuit as follows (The battery must be charged).

(1) Brake light wiring inspection:

●Check brake light operation and replace any defective parts. The brake light must go on only when brakes are applied.

●Remove the left side cover, and disconnect the indicator switch 3-pin plug.

NOTE: For 1978 and later models, indicator switch 3-pin plug is behind the electrical panel. The panel needs not be removed to disconnect the plug.

●Set an ohmmeter to the R x 1 range and voltmeter to the 30V DC range. Check the wiring as shown in Table 121.

CAUTION **To prevent a meter burning, turn off the ignition switch while using an ohmmeter.**

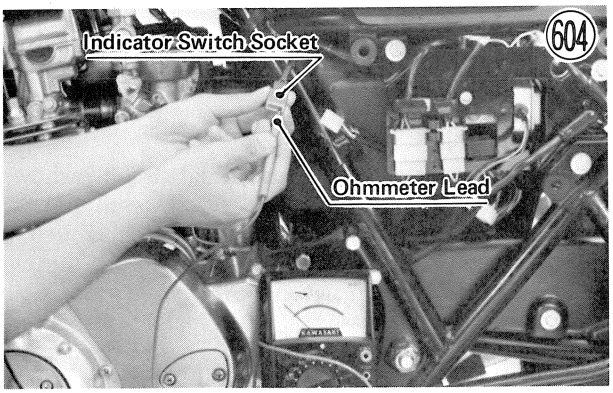

Table 121 Brake Light Wiring Inspection

Meter	Connections†	Brake	Standard
Voltmeter 30V DC	Meter (+) ⟷ Blue	Apply	Battery Voltage
		Release	0V
	Meter (+) ⟷ Green/White	—	Battery Voltage
Ohmmeter R x 1	Meter (+) ⟷ Black/Yellow	—	0 Ω

†1. Negative (–) meter lead connected to the ground.
2. Positive (+) meter lead a 3-pin socket with indicator switch disconnected.

If meter does not read according to this table, there may be an open or short. In case the voltage of the green/white lead shows 0 volts, the indicator bulb may be burned out.

(2) Brake light failure indicator switch inspection:

●Make sure that the brake light oprates properly, and that the brake light wiring is not damaged.

●Connect the indicator switch 3-pin plug.

●Measure the voltage at the 3-pin plug as shown in Table 122.

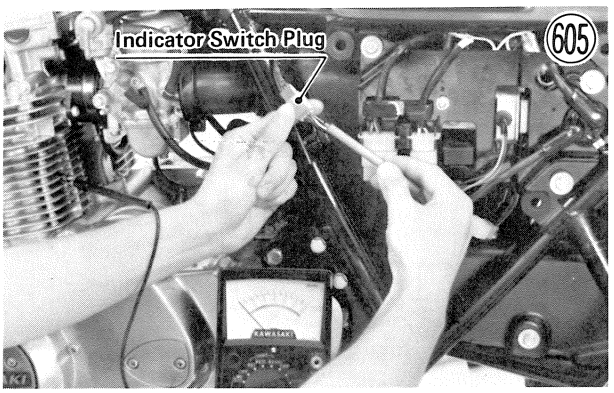

Table 122 Indicator Switch Inspection

Meter	Connections†	Brake	Standard
30V DC	Meter (+) ⟷ Yellow	Apply	Battery Voltage
		Release	0V
	Meter (+) ⟷ Green/White	Apply	0V
		Release	Battery Voltage

†1. Negative (–) meter lead connected to the ground.
2. Positive (+) meter lead at 3-pin plug with indicator switch connected.

If any one of the meter readings shows an improper value, the brake light failure indicator switch is defective.

TURN SIGNALS

A wiring diagram of the turn signal circuit is shown in Fig. 606. When the ignition switch is on and the turn signal switch is turned to R or L, a ground is provided for the circuit so current can flow. Current to the right or left turn signals flows through the closed contacts and the resistance wire inside the turn signal relay, and the turn signals go on. The resistance wire quickly heats up, expands, and allows a spring to pull the contacts open. When the contacts have opened, the circuit is broken, the turn signals go off, and the resistance wire cools and contracts, closing the contacts so that the cycle can begin again. The indicator light in the turn signal circuit flashes on and off with the turn signals to indicate that they are working properly.

Since the turn signal relay is designed to operate correctly only when two turn signals (one front and one rear) and the turn signal indicator light are properly connected in the circuit, trouble may result from a burned out bulb, a bulb of incorrect wattage, loose wiring, as well as from a defect in the relay itself. In general, if the trouble with the circuit is common to both right and left turn signals, it is probably caused by a defective turn signal relay, although it may be due to a bad switch, wiring, or battery. If the trouble is with only one side – either right or left – then the relay is not at fault since the same relay is used for both sides.

Turn Signal Circuit (606)

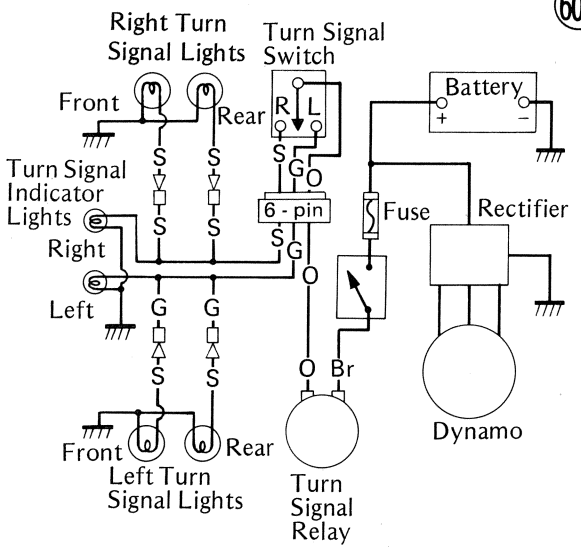

Turn signal trouble

(1)Neither right nor left turn signals come on at all:
- Check that battery voltage is normal.
- Unplug the relay leads and use an ohmmeter to check that there is continuity (close to zero ohms) between the relay terminals. If there is no ohmmeter reading, or if there is several ohms resistance, replace the relay with a new one.

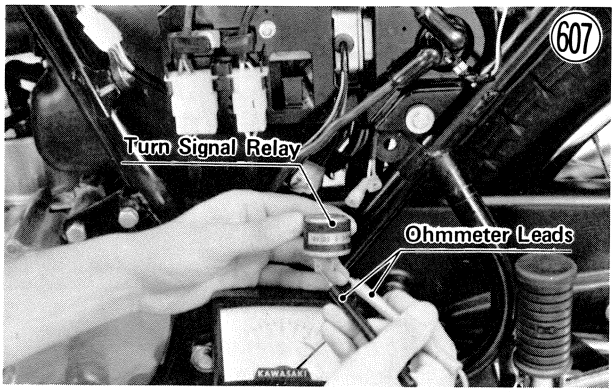

- If the relay checks good, turn the meter to the 30V DC range, connect the + meter lead to the brown lead that was disconnected from the relay, and connect the – meter lead to the orange lead. With the ignition switch on, first switch the turn signal switch to the R and then to the L position. The meter should register battery voltage at either position. If it does not, the fuse, ignition switch, or wiring is at fault. If battery voltage is read on the meter but the turn signals will still not work when the relay is reconnected, then recheck all wiring connections.

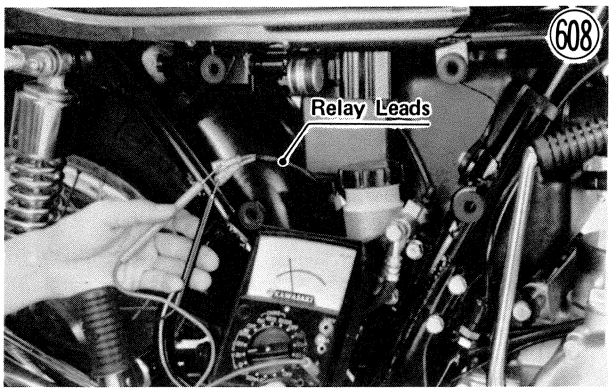

(2)Both right or both left turn signals come on and stay on or flash too slowly:
- Check that battery voltage is not low.
- Check that all wiring connections are good.
- Check that the turn signal bulbs and indicator bulb are of the correct wattage.
- If all of the above check good, replace the relay.

(3)A single light on one side comes on and stays on:
- Either the light that does not come on is burned out or of the incorrect wattage, or the wiring is broken or improperly connected.

(4)Neither light on one side comes on:
- Unless both lights for that side are burned out, the trouble is with the turn signal switch.

(5) Flashing rate is too fast:

- If this occurs on both the right and left sides, check that the battery is not being overcharged (indicating a defective regulator). If the dynamo and the battery voltage are normal, replace the turn signal relay.
- If this occurs on only one side, one or both of the turn signal bulbs are of too high a wattage.

HORN

The horn circuit and construction are shown in Fig. 609. When the horn button is pressed with the ignition switch on, the horn is grounded to complete the horn circuit. Current then flows through the horn contacts and horn coil, magnetizing the iron core. The magnetized iron core pulls on the armature and diaphragm assembly, the movement of which pushes open the contacts, interrupting the current flow. Since the core now loses its magnetism, the armature and diaphragm assembly springs back to its original position, closing the contacts. This cycle repeats until the horn button is release. Since each cycle takes only a fraction of a second, the diaphragm moves fast enough to produce sound.

Horn Construction

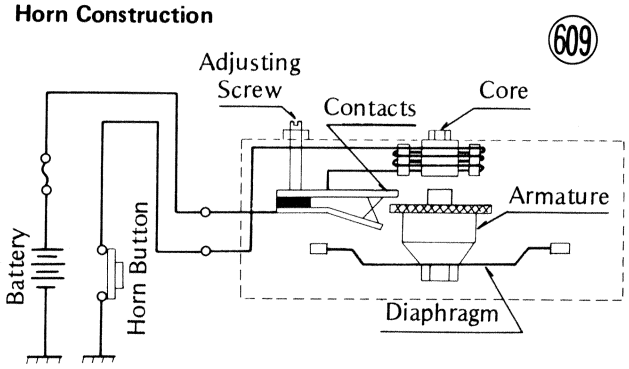

The contacts wear down after long use, requiring adjustment from time to time (Pg. 21). If the horn itself is determined to be at fault and adjustment fails to correct the trouble, the contacts or some other component in the horn is defective. The horn cannot be disassembled and must be replaced if defective.

Horn trouble

- Check that battery voltage is normal.
- Disconnect the leads to the horn, and connect to the horn terminals a multimeter set to the R x 1 range to check for continuity (close to zero ohms). If the reading is several ohms or if there is no reading at all, replace the horn.

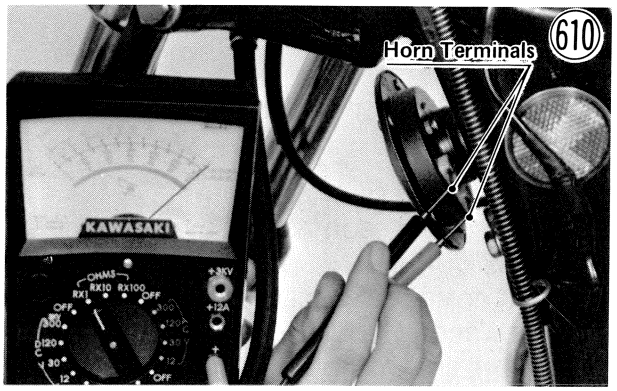

- If the reading is very close to zero, set the multimeter to the 30V DC range, and connect the meter to the leads that wear disconnected from the horn. The + meter lead goes to the brown lead, and the – meter lead goes to the black lead. With the ignition switch on, press the horn button. The meter should register battery voltage. If it does not, the fuse, ignition switch, or the wiring is at fault. Also check that the black/yellow lead is grounded to the handlebar holder stem.

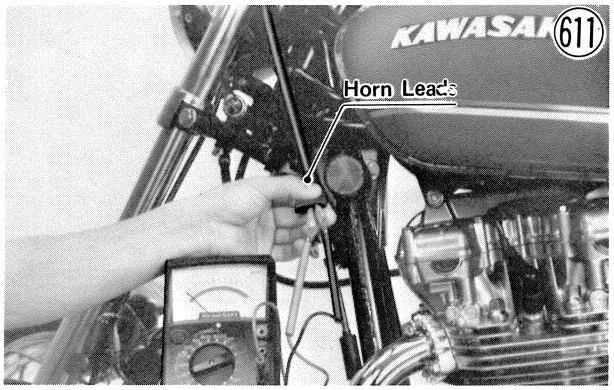

- If the meter does show battery voltage, indicating that the horn trouble lies within the horn itself, and adjustment fails to correct the trouble, replace the horn.

NOTE: Do not loosen the armature mounting since doing so would alter the armature position such that the horn would probably have to be replaced.

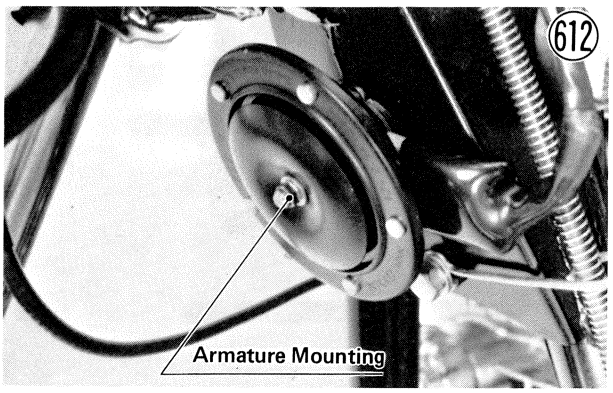

SPEEDOMETER, TACHOMETER

The speedometer and the tachometer are sealed units which cannot be disassembled. If either fails to work satisfactorily, it must be replaced as a complete unit.

The speedometer and tachometer illumination lights and the indicator lights are independent and can be removed for replacement if necessary.

There is damping oil around the meter needle shaft which damps needle flutter and makes the needle move smoothly. If the meters are left upside down or sideways for any length of time, the damping oil will spill out of the reservoir, and the meters will malfunction.

Appendix

SPECIAL TOOLS

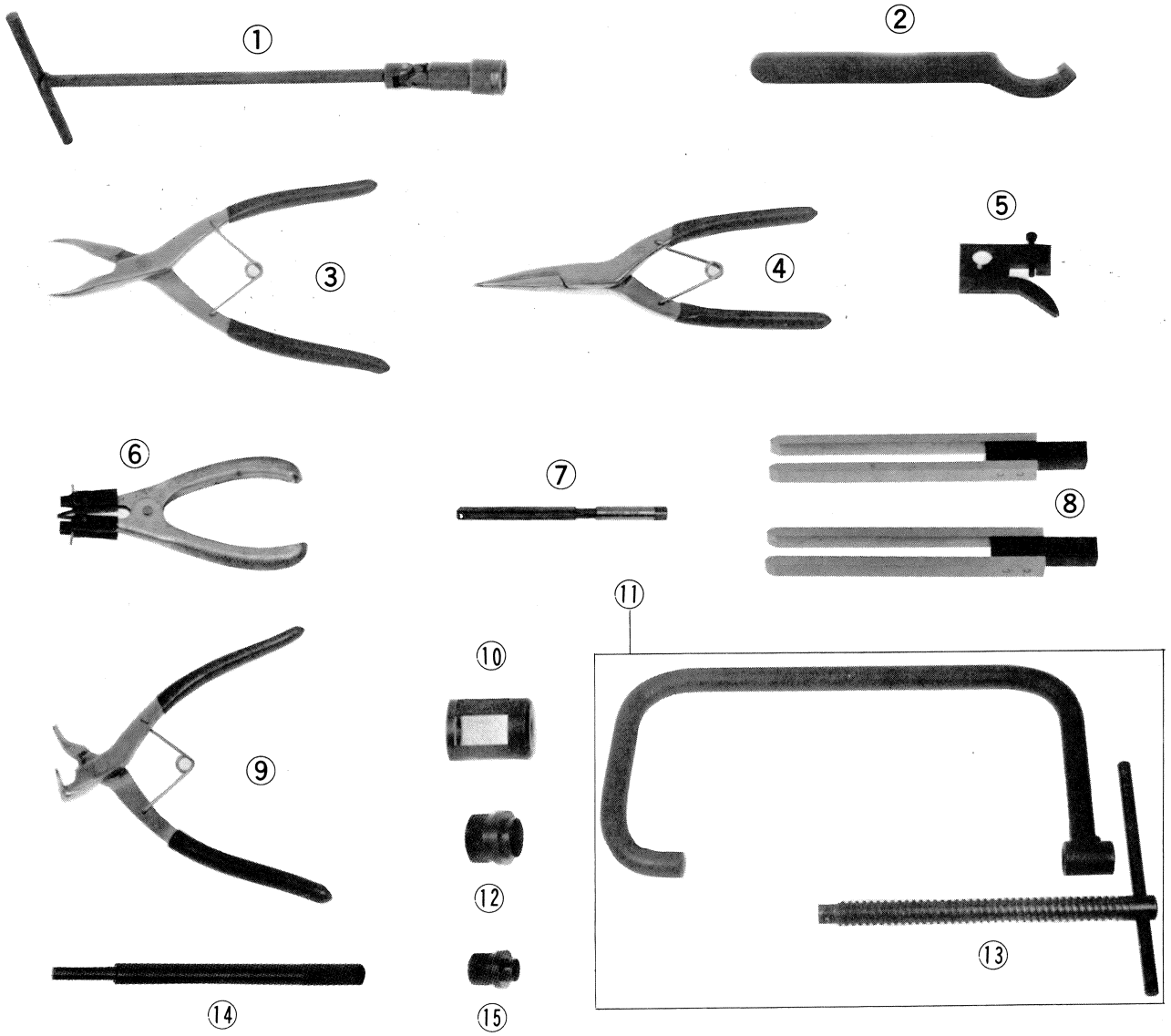

REF. No.	PART NO.	DESCRIPTION
1	57001-110	SPARK PLUG WRENCH
2	57001-134	STEM NUT WRENCH
3	57001-143	CIRCLIP INSIDE PLIERS
4	57001-144	CIRCLIP OUTSIDE PLIERS
5	57001-501	VALVE LIFTER HOLDER
6	57001-115	PISTON RING PLIERS
7	57001-365	VALVE GUIDE REAMER
8	57001-341	PISTON BASE
9	57001-154	RETAINING RING PLIERS
10	57001-246	VALVE SPRING COMPRESSOR ADAPTER
11	57001-241	VALVE SPRING COMPRESSOR ASSEMBLY
12	57001-131	KICK SHAFT OIL GUIDE
13	57001-244	VALVE SPRING COMPRESSOR CENTER SHAFT
14	57001-169	VALVE GUIDE ARBOR
15	57001-264	SHIFT SHAFT OIL SEAL GUIDE

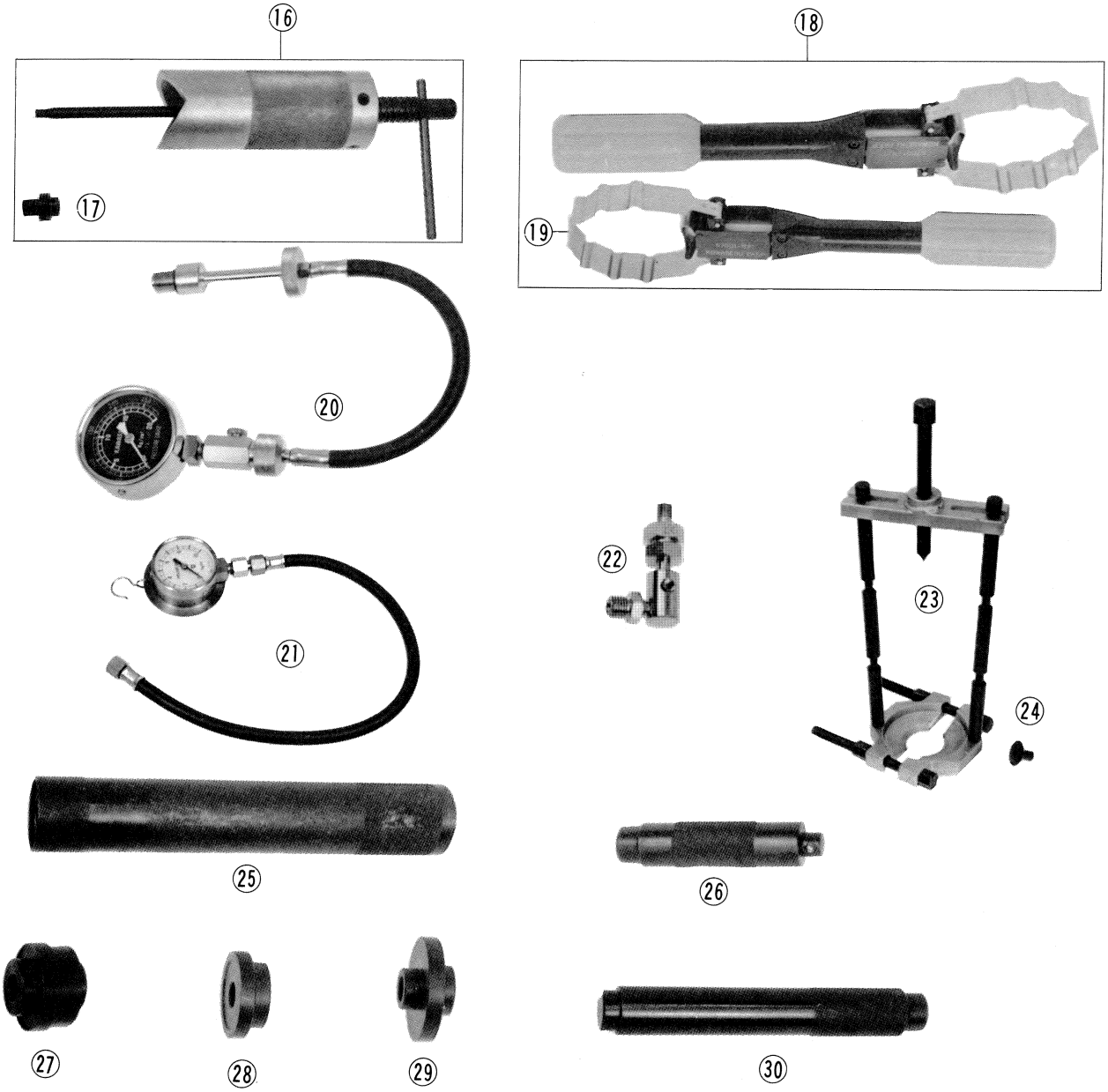

REF. NO.	PART NO.	DESCRIPTION
16	57001-910	PISTON PIN PULLER ASSEMBLY
17	57001-914	ADAPTER "C"
18	57001-921	PISTON RING COMPRESSOR ASSEMBLY
19	57001-926	ADAPTER
20	57001-123	COMPRESSION GAUGE
21	57001-164	OIL PRESSURE GAUGE
22	57001-400	OIL PRESSURE GAUGE ADAPTER
23	57001-135	BEARING PULLER
24	57001-166	ADAPTER
25	57001-137	STEM BEARING DRIVER
26	57001-139	BEARING DRIVER HOLDER
27	57001-138	STEM CUP DRIVER
28	57001-140	BEARING DRIVER
29	57001-296	BEARING DRIVER
30	57001-285	SHIFT DRUM BEARING DRIVER (Used to install the balancer needle bearing)

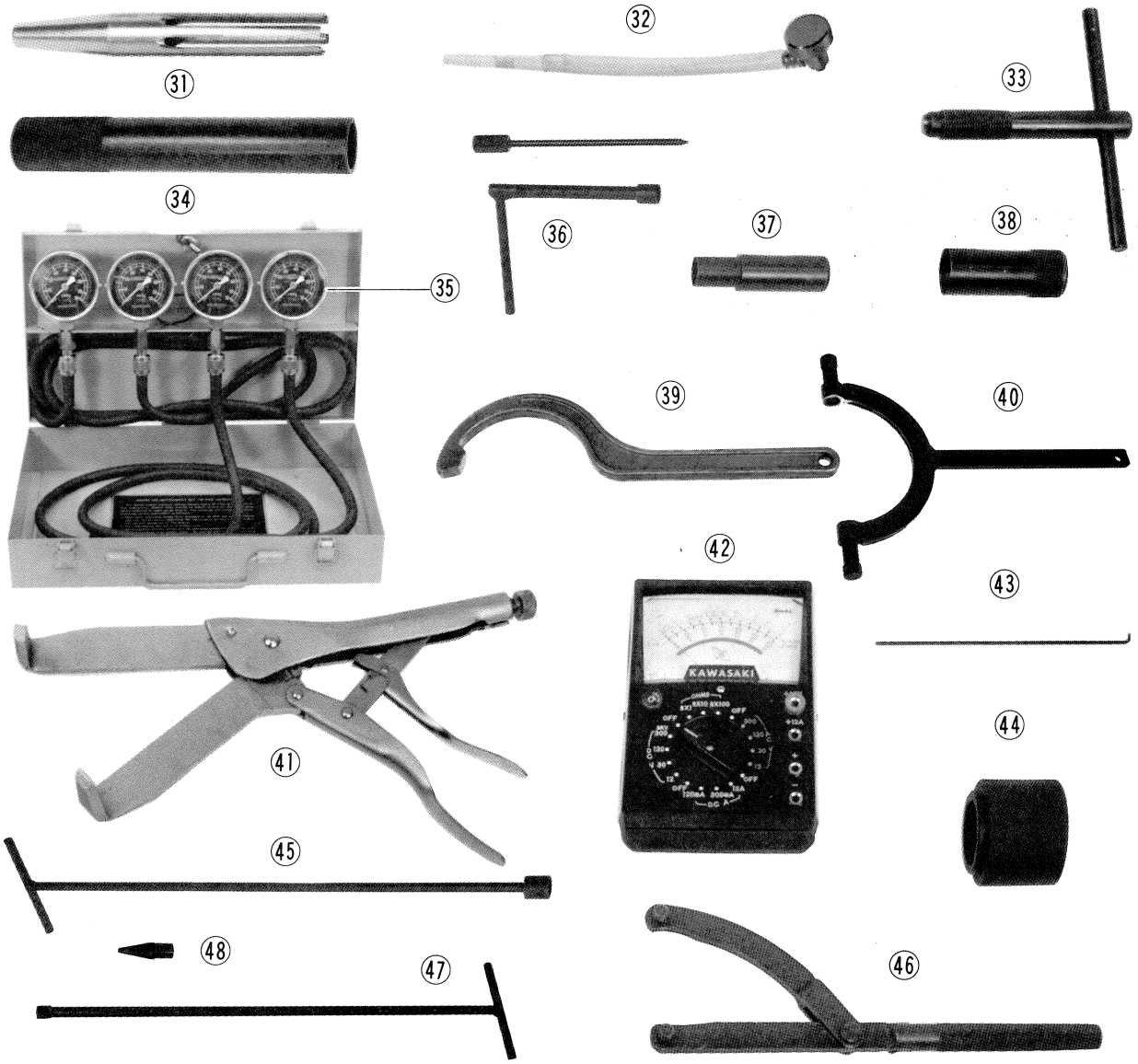

REF. NO.	PART NO.	DESCRIPTION
31	57001-380	TRANSMISSION CIRCLIP DRIVER (Used to install the transmission ball bearing)
32	57001-208	FUEL LEVEL GAUGE
33	57001-254	ROTOR PULLER
34	57001-127	VACUUM GAUGE SET
35	57001-226	VACUUM GAUGE
36	57001-351	BALANCE ADJUSTER
37	57001-132	MASTER CYLINDER RING DRIVER
38	57001-161	FRONT FORK PISTON RING GUIDE
39	57001-255	ROTOR HOLDER (for '76 and '77 models)
40	57001-308	FLYWHEEL HOLDER (for '78 and later models)
41	57001-305	CLUTCH HOLDER
42	57001-983	HAND TESTER
43	57001-309	MASTER CYLINDER STOPPER REMOVER
44	57001-141	FRONT FORK OIL SEAL DRIVER
45	57001-142	FRONT FORK CYLINDER HOLDER ASSEMBLY
46	57001-306	ENGINE SPROCKET AND FLYWHEEL HOLDER
47	57001-183	FRONT FORK CYLINDER HOLDER HANDLE
48	57001-1011	FRONT FORK CYLINDER HOLDER ADAPTER

PERIODIC MAINTENANCE CHART

The maintenance and adjustments must be done in accordance with this chart to keep the motorcycle in good running condition. **The initial maintenance is vitally important and must not be neglected.**

OPERATION \ FREQUENCY	Whichever comes first ↓ Every	ODOMETER READING* km							See Page
		800 ± 100	5,000 ± 250	10,000 ± 250	15,000 ± 250	20,000 ± 250	25,000 ± 250	30,000 ± 250	
Battery electrolyte level — check †	month	•	•	•	•	•	•	•	176
Brake adjustment — check †		•	•	•	•	•	•	•	18
Brake wear — check †			•	•	•	•	•	•	161,218
Brake fluid level — check †	month	•	•	•	•	•	•	•	161
Brake fluid — change	year			•		•		•	160
Clutch — adjust		•	•	•	•	•	•	•	16
Carburetors — adjust		•	•	•	•	•	•	•	14
Throttle cables — adjust		•	•	•	•	•	•	•	13
Steering play — check †		•	•	•	•	•	•	•	19
Spoke tightness and rim runout — check †		•	•	•	•	•	•	•	154
Drive chain wear — check †			•	•	•	•	•	•	155
Front fork — inspect/clean		•	•	•	•	•	•	•	167,218
Rear shock absorbers — inspect		•	•	•	•	•	•	•	168
Nuts, Bolts, Fasteners — check and torque		•		•		•		•	201~203
Spark plugs — clean and gap †		•	•	•	•	•	•	•	9
Camshaft chain — adjust		•	•	•	•	•	•	•	11
Points, timing — check †		•	•	•	•	•	•	•	9
Valve clearance — check †		•	•	•	•	•	•	•	12
Air cleaner element — clean			•		•		•		112
Air cleaner element — replace	5 cleanings			•		•		•	30
Fuel system — clean		•	•	•	•	•	•	•	196
Tire tread wear — check †			•	•	•	•	•	•	153
Engine oil — change	year	•	•	•	•	•	•	•	196
Oil filter — replace		•		•		•		•	196
General lubrication — perform			•	•	•	•	•	•	197
Front fork oil — change				•		•		•	167,218
Timing advancer — lubricate				•		•		•	180
Swing arm — lubricate				•		•		•	170,197
Wheel bearings — grease	2 years					•			155
Speedometer gear housing — grease	2 years					•			155
Steering stem bearings — grease	2 years					•			163
Drive chain — lubricate	Every 300 ± 50 km								156
Drive chain — adjust	Every 800 ± 100 km								17

*For higher odometer readings, repeat at the frequency interval established here.
†Replace, add or adjust if necessary.

Engine Oil Inspection and Change

In order for the engine, transmission, and clutch to function properly, maintain the engine oil at the proper level, and change the oil in accordance with the periodic maintenance table. Motorcycle operation with insufficient, deteriorated, or contaminated engine oil will cause accelerated wear and may result in engine or transmission seizure.

1) Oil level

- Situate the motorcycle so that it is perpendicular to the ground (on its center stand).
- If the oil has just been changed, start the engine and run it for several minutes at idling speed. This fills the oil filter with oil. Then wait several minutes until the oil settles.

CAUTION **Run the engine at idling speed at least until the oil pressure light turns off. Racing the engine before the oil reaches every part can cause the engine seizure.**

- If the motorcycle has just been used, wait several minutes for all the oil to drain down.
- Check the engine oil level through the inspection window in the lower right side of the engine. With the motorcycle held level or on the center stand, the oil level should come up between the lines next to the window.

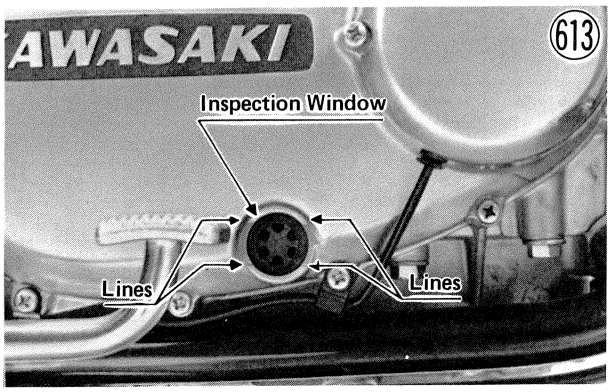

- If the oil level is too high, remove the excess oil, using syringe or some other suitable device.
- If the amount of oil is insufficient, add the correct amount of oil through the oil filler opening. Fill, using the same type and make of oil that already is in the engine.

WARNING **If the engine is run without oil, it will be severely damaged. In addition, the engine may suddenly seize, locking the rear wheel and causing an accident if the clutch lever is not pulled in fast enough.**

2) Oil and oil filter change

- Warm up the engine thoroughly, and then stop the engine.
- Set the motorcycle up on its center stand, place an oil pan beneath the engine, and remove the engine drain plug.

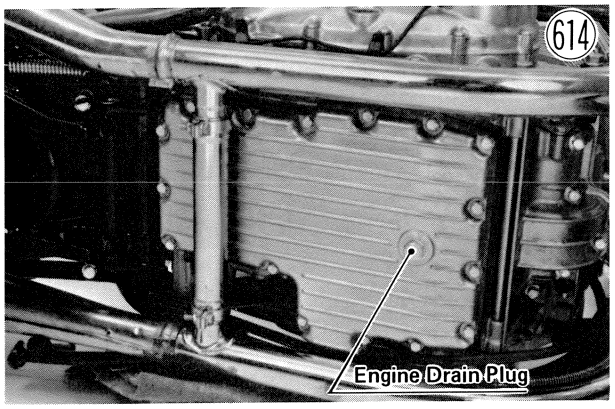

- If the oil filter is to be changed, remove the filter and replace the oil filter with a new one. Check that it is properly assembled (Pg. 31 ~ 32).

NOTE: Check for **O** ring damage. If necessary, replace it with a new one.

- Install the oil filter, tightening its bolt with 1.8 ~ 2.2 kg-m (13 ~ 16 ft-lbs) of torque; and filter drain plug with 1.6 ~ 2.0 kg-m (11.5 ~ 14.5 ft-lbs) of torque.
- After the oil has completely drained out, install the engine drain plug and gasket, using a new gasket if the old one is deteriorated or damaged. Proper torque for the drain plug is 2.7~3.3 kg-m (19.5~24.0).
- Fill the engine up to the upper level with SE class SAE 10W40, 10W50, 20W40, or 20W50 motor oil. It will take about 4.0 liters when the filter is changed. When the filter is not changed, a refill takes about 3.6 ℓ.

NOTE: After the engine has been run and then stopped for a few minutes, the oil level should come to between the upper and lower marks.

Fuel System Cleaning

Water or dirt anywhere in the fuel system can cause starting difficulty, poor running, and lack of power. Clean out the fuel system as follows:

- Turn the fuel tap to the off position. Unscrew the sediment cup at the bottom of the tap, and clean out the water and dirt from it. Clean any dirt out of the fuel tap filter.

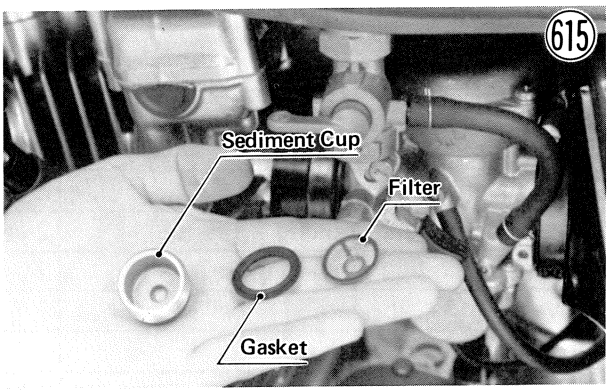

- If there was water inside the sediment cup, there may also be some in the fuel tank. Holding a container under the fuel tap, turn the tap to the reserve position

to drain the tank until gasoline only comes out, and then close the tap.
- Install the gasket and the sediment cup. Make sure that the gasket is in the tap and that the filter is not damaged during installation.
- Remove the plug from the bottom of each carburetor float bowl to drain the bowls.

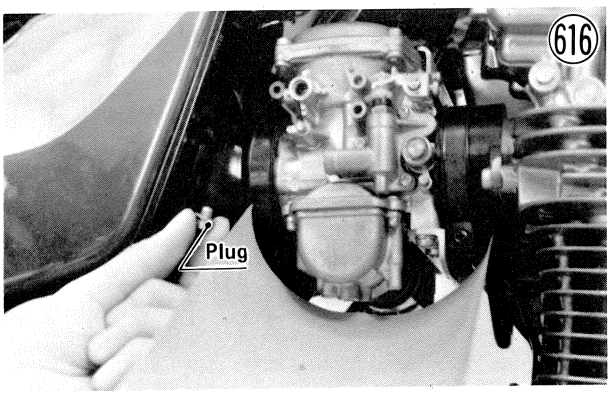

General Lubrication

Lubrication of exposed parts subject to rust with either motor oil or regular grease should be carried out periodically and whenever the vehicle has been operated under wet or rainy conditions. Before lubricating each part, clean off any rusty spots with rust remover. Badly rusted nuts, bolts, etc. should be replaced with new ones.
- Lubricate the clutch lever pivot and brake lever pivot, and the exposed portion of the clutch inner cable.
- Wipe off excess lubricant.

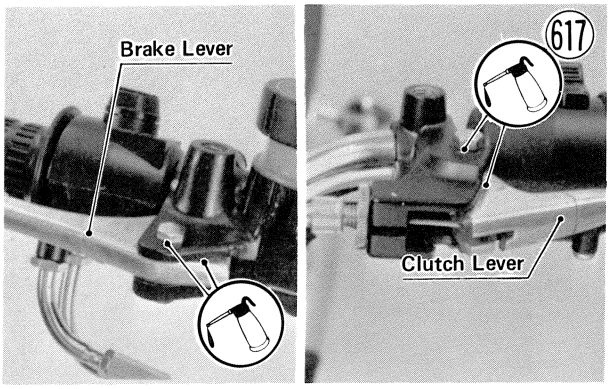

- Lubricate the clutch cable and throttle cables, as shown in the figure.

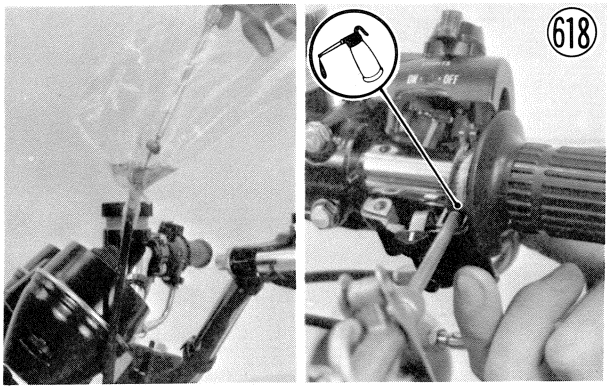

- Wipe clean the throttle grip inner surface and the handlebar where the throttle grip fits.
- Apply grease to the handlebar where the throttle grip turns.
- Apply a light coat of grease to the exposed portion of the throttle grip inner cables and their catches in the throttle grip.
- Fit the throttle cables into the throttle grip. Refer to throttle cable installation (Pg. 95).

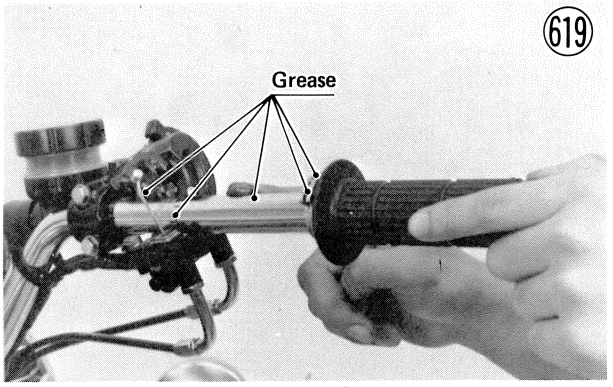

- Wipe off any dirt or grime from around the left foot peg, shift pedal, and side stand.
- Lubricate the exposed metal surfaces around the shift pedal serration and the bolts and nuts for the left foot peg and side stand.
- Wipe off excess lubricant.

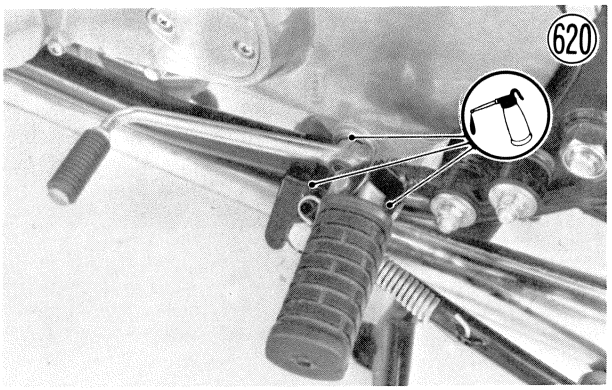

- Force grease into the fitting until it comes out at both sides of the swing arm, and wipe off any excess.

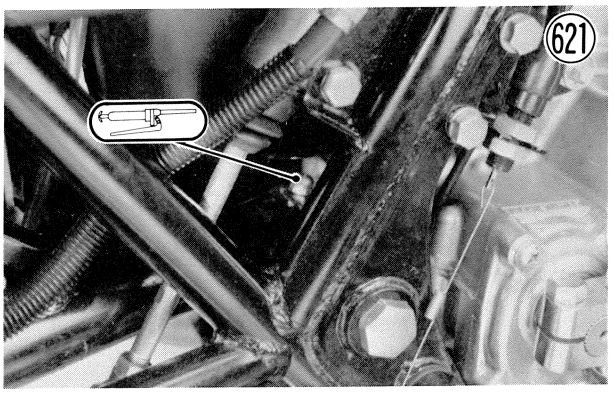

- Wipe off any dirt or grime from around the right foot peg, brake pedal, kickstarter pedal, and brake rod.
- Lubricate the exposed metal surfaces around the bolts and nuts for the right foot peg, brake pedal, kickstarter pedal, and brake rod.
- Wipe off excess lubricant.

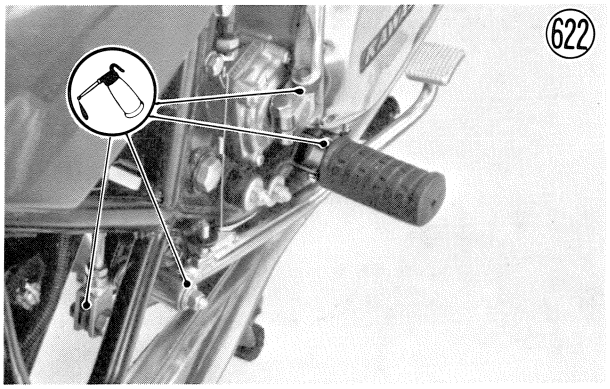

- Oil lightly the end of each drive chain adjuster.
- Wipe off excess oil.

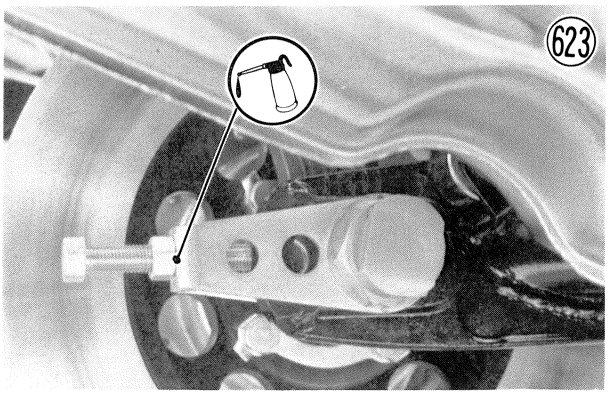

- Lubricate the center stand pivot.

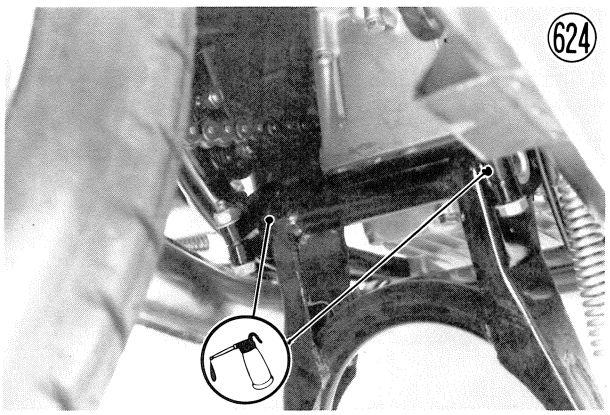

- Oil lightly the carburetor link mechanism and the choke link mechanism.

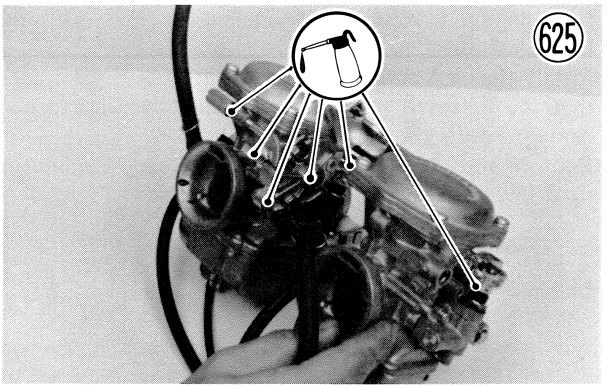

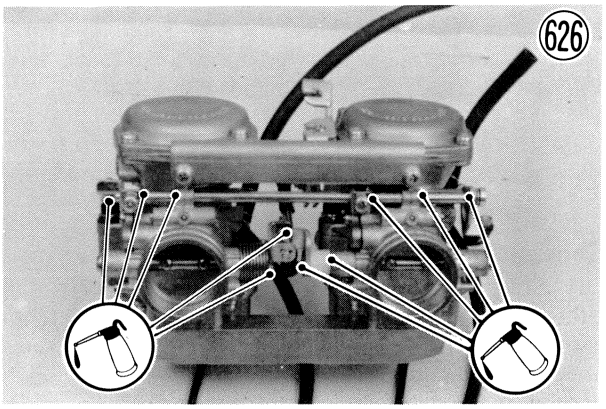

VALVE ADJUSTMENT CHART

PART NUMBER	-051	-052	-053	-054	-055	-056	-057	-058	-059	-060	-061	-062	-063	-064	-065	-066	-067	-068	-069	-070	-071	-072	-073	-074	-075
										PRESENT SHIM SIZE															
MILLIMETERS	2.20	2.25	2.30	2.35	2.40	2.45	2.50	2.55	2.60	2.65	2.70	2.75	2.80	2.85	2.90	2.95	3.00	3.05	3.10	3.15	3.20	3.25	3.30	3.35	3.40

VALVE CLEARANCE

MILLIMETERS																									
0.00-0.04		2.20	2.25	2.30	2.35	2.40	2.45	2.50	2.55	2.60	2.65	2.70	2.75	2.80	2.85	2.90	2.95	3.00	3.05	3.10	3.15	3.20	3.25	3.30	3.35
0.05-0.10							SPECIFIED CLEARANCE/NO CHANGE REQUIRED																		
0.10-0.14	2.25	2.30	2.35	2.40	2.45	2.50	2.55	2.60	2.65	2.70	2.75	2.80	2.85	2.90	2.95	3.00	3.05	3.10	3.15	3.20	3.25	3.30	3.35	3.40	
0.15-0.19	2.30	2.35	2.40	2.45	2.50	2.55	2.60	2.65	2.70	2.75	2.80	2.85	2.90	2.95	3.00	3.05	3.10	3.15	3.20	3.25	3.30	3.35	3.40		
0.20-0.24	2.35	2.40	2.45	2.50	2.55	2.60	2.65	2.70	2.75	2.80	2.85	2.90	2.95	3.00	3.05	3.10	3.15	3.20	3.25	3.30	3.35	3.40			
0.25-0.29	2.40	2.45	2.50	2.55	2.60	2.65	2.70	2.75	2.80	2.85	2.90	2.95	3.00	3.05	3.10	3.15	3.20	3.25	3.30	3.35	3.40				
0.30-0.34	2.45	2.50	2.55	2.60	2.65	2.70	2.75	2.80	2.85	2.90	2.95	3.00	3.05	3.10	3.15	3.20	3.25	3.30	3.35	3.40					
0.35-0.39	2.50	2.55	2.60	2.65	2.70	2.75	2.80	2.85	2.90	2.95	3.00	3.05	3.10	3.15	3.20	3.25	3.30	3.35	3.40						
0.40-0.44	2.55	2.60	2.65	2.70	2.75	2.80	2.85	2.90	2.95	3.00	3.05	3.10	3.15	3.20	3.25	3.30	3.35	3.40							
0.45-0.49	2.60	2.65	2.70	2.75	2.80	2.85	2.90	2.95	3.00	3.05	3.10	3.15	3.20	3.25	3.30	3.35	3.40								
0.50-0.54	2.65	2.70	2.75	2.80	2.85	2.90	2.95	3.00	3.05	3.10	3.15	3.20	3.25	3.30	3.35	3.40									
0.55-0.59	2.70	2.75	2.80	2.85	2.90	2.95	3.00	3.05	3.10	3.15	3.20	3.25	3.30	3.35	3.40										
0.60-0.64	2.75	2.80	2.85	2.90	2.95	3.00	3.05	3.10	3.15	3.20	3.25	3.30	3.35	3.40											
0.65-0.69	2.80	2.85	2.90	2.95	3.00	3.05	3.10	3.15	3.20	3.25	3.30	3.35	3.40												
0.70-0.74	2.85	2.90	2.95	3.00	3.05	3.10	3.15	3.20	3.25	3.30	3.35	3.40													
0.75-0.79	2.90	2.95	3.00	3.05	3.10	3.15	3.20	3.25	3.30	3.35	3.40														
0.80-0.84	2.95	3.00	3.05	3.10	3.15	3.20	3.25	3.30	3.35	3.40															
0.85-0.89	3.00	3.05	3.10	3.15	3.20	3.25	3.30	3.35	3.40																
0.90-0.94	3.05	3.10	3.15	3.20	3.25	3.30	3.35	3.40																	
0.95-0.99	3.10	3.15	3.20	3.25	3.30	3.35	3.40																		
1.00-1.04	3.15	3.20	3.25	3.30	3.35	3.40																			
1.05-1.09	3.20	3.25	3.30	3.35	3.40																				
1.10-1.14	3.25	3.30	3.35	3.40																					
1.15-1.19	3.30	3.35	3.40																						
1.20-1.24	3.35	3.40																							
1.25-1.30	3.40																								

INSTALL THIS SHIM

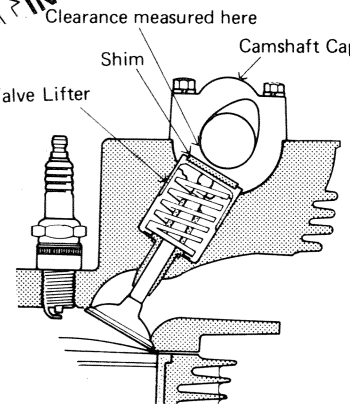

1. **Measure valve clearance (cold).**
2. **Check present shim size.**
3. **Match clearance in vertical column with present shim size in horizontal column.**
4. **The shim specified where the lines intersect is the one that will give you the proper clearance.**

NOTE: If there is no clearance between the shim and the cam, select a shim which is several sizes smaller and then remeasure the gap.

Do not put shim stock under the shim. This may cause the shim to pop out at high rpm. Do not grind the shim. This may cause it to fracture.

Check the valve clearance with the cam lobe pointing directly away from the valve, as pictured. Checking the clearance at any other cam position may result in improper valve clearance.

VALVE INSTALLED HEIGHT PROCEDURE TABLE

Measurement		Probable Cause	Recommendation	
Inlet	Exhaust			
Less than 39.68 mm	Less than 40.68 mm	Valve stem ground previously	1. Check to be sure Dimension "A" is at least 4.7 mm. See CAUTION, Pg. 124. 2. Interchange valve to deeper cut valve seat. Remeasure. 3. Grind valve face to drop it further into valve seat. Remeasure. 4. Replace valve. Remeasure.	
			Assemble with this shim:	After checking valve clearance, final shim may be in this range:
39.68~39.72 mm	40.68~40.72 mm	Normal/acceptable	3.00 mm	3.00~3.40 mm
39.73~39.77	40.73~40.77		2.95	2.95~3.40
39.78~39.82	40.78~40.82		2.90	2.90~3.35
39.83~39.87	40.83~ 40.87		2.85	2.85~3.30
39.88~39.92	40.88~40.92		2.80	2.80~3.25
39.93~39.97	40.93~40.97		2.75	2.75~3.20
39.98~40.02	40.98~41.02		2.70	2.70~3.15
40.03~40.07	41.03~41.07		2.65	2.65~3.10
40.08~40.12	41.08~41.12		2.60	2.60~3.05
40.13~40.17	41.13~41.17		2.55	2.55~3.00
40.18~40.22	41.18~41.22		2.50	2.50~2.95
40.23~40.27	41.23~41.27		2.45	2.45~2.90
40.28~40.32	41.28~41.32		2.40	2.40~2.85
40.33~40.37	41.33~40.37		2.35	2.35~2.80
40.38~40.42	41.38~41.42		2.30	2.30~2.75
40.43~40.47	41.43~41.47		2.25	2.25~2.70
40.48~40.52	41.48~41.52		2.20	2.20~2.65
40.53~40.57	41.53~41.57		2.20	2.20~2.60
40.58~41.07 mm	41.58~42.07 mm	Wear or grinding of valve face and valve seat allowed valve to drop too far into valve seat.	1. Interchange valve to shallowest cut valve seat. Remeasure. 2. Grind 0.5 mm maximum off valve stem. See CAUTION, Pg. 124. Remeasure.	
More than 41.07 mm	More than 42.07 mm	Valve face and valve seat worn out or excessively ground.	1. Replace valve. Remeasure. 2. Replace cylinder head. Remeasure.	

TORQUE AND LOCKING AGENT

Tighten all bolts and nuts to the proper torque using an accurate torque wrench. If insufficiently tightened, a bolt or nut may become damaged or fall off, possibly resulting in damage to the motorcycle and injury to the rider. A bolt or nut which is overtightened may become damaged, strip an internal thread, or break and then fall out. The following table lists the tightening torque for the major bolts and nuts, and the parts requiring use of a non-permanent locking agent.

When checking the tightening torque of the bolts and nuts, first loosen the bolt or nut by half a turn and tighten to the specified torque.

ENGINE

Part	Locking Agent (•) Required	Quantity	Metric (kg-m)	English (ft-lbs)	See Pg.
Balancer chain tensioner mounting bolts φ6 P1.0	•	2	0.9 ~ 1.1	78 ~ 95 in-lbs	66
Breather baffle plate bolts	•	2	0.45 ~ 0.55	39 ~ 48 in-lbs	59
Breather cover bolt φ8 P1.25	–	1	1.3 ~ 1.7	9.5 ~ 12.0	59
Camshaft cap bolts φ6 P1.0	–	16	1.1 ~ 1.3	95 ~ 113 in-lbs	39
Camshaft chain guide holder bolts φ6 P1.0	•	2	1.1 ~ 1.3	95 ~ 113 in-lbs	79
Camshaft sprocket bolts φ6 P1.0	•	6	1.4 ~ 1.6	10.0 ~ 11.5	40
Clutch hub nut φ20 P1.5	–	1	12 ~ 15	87 ~ 108	53
Clutch release mounting screws φ6 P1.0	•	2	–	–	55
Clutch spring bolts φ6 P1.0	–	5	0.8 ~ 1.0	69 ~ 87 in-lbs	54
Connecting rod big end cap nuts φ8 P0.75	–	4	3.6 ~ 4.0	26 ~ 29	79
Crankcase bolts					
upper φ6 P1.0	–	3	0.9 ~ 1.1	78 ~ 95 in-lbs	68
lower φ6 P1.0	–	17	0.9 ~ 1.1	78 ~ 95 in-lbs	67
lower φ10 P1.5	–	6	3.7 ~ 4.3	27 ~ 31	67
Cylinder head bolts φ6 P1.0	–	3	1.1 ~ 1.3	95 ~ 113 in-lbs	41
Cylinder head cover bolts φ6 P1.0	–	14	1.1 ~ 1.3	95 ~ 113 in-lbs	39
Cylinder head cover bracket bolts φ8 P1.25					
upper	–	4	2.0 ~ 2.8	14.5 ~ 20.0	40
lower	–	2	1.6 ~ 2.2	11.5 ~ 16.0	40
Cylinder head nuts φ10 P1.25	–	8	3.8 ~ 4.2	27 ~ 30	41
Dynamo armature Allen bolts φ6 P1.0	•	3	0.9 ~ 1.1	78 ~ 95 in-lbs	46

Part	Locking Agent (•) Required	Quantity	Metric (kg-m)	English (ft-lbs)	See Pg.
Dynamo rotor bolt ('76 and '77) ϕ10 P1.25	–	1	7.0 ~ 8.0	51 ~ 58	48
Dynamo flywheel bolt ('78 and later) ϕ12 P1.25	–	1	12 ~ 14	87 ~ 101	48
Engine drain plug ϕ12 P1.5	–	1	2.7 ~ 3.3	19.5 ~ 24.0	196
Engine mounting bolts ϕ10 P1.5	–	5	3.4 ~ 4.6	25 ~ 33	28
Engine mounting bracket bolts ϕ8 P1.25	–	6	2.0 ~ 2.8	14.5 ~ 20.0	28
Engine sprocket nut ϕ20 P1.5	–	1	7.5 ~ 8.5	54 ~ 61	56
Field coil mounting bolts ϕ6 P1.0	•	3	0.9 ~ 1.1	78 ~ 95 in-lbs	46
Neutral indicator switch ϕ12 P1.5	–	1	1.3 ~ 1.7	9.5 ~ 12.0	57
Oil filter drain plug ϕ8 P1.25	–	1	1.6 ~ 2.0	11.5 ~ 14.5	31
Oil filter mounting bolt ϕ20 P1.5	–	1	1.8 ~ 2.2	13.0 ~ 16.0	31
Oil pan bolts ϕ6 P1.0	–	17	0.9 ~ 1.1	78 ~ 95 in-lbs	61
Oil pressure indicator switch PT1/8	–	1	1.3 ~ 1.7	9.5 ~ 12.0	102
Oil pressure relief valve ϕ12 P1.25	•	1	1.3 ~ 1.7	9.5 ~ 12.0	74
Oil pump mounting bolts ϕ6 P1.0.	•	3	0.9 ~ 1.1	78 ~ 95 in-lbs	61
Primary chain guide mounting bolts ϕ8 P1.25	•	4	–	–	140
Ratchet gear arm stopper bolts	•	2	0.9 ~ 1.1	78 ~ 95 in-lbs	74
Return spring pin ϕ8 P1.25	•	1	–	–	58
Shift drum positioning pin bolt ϕ16 P1.0	–	1	3.2 ~ 3.8	23 ~ 27	68
Spark plugs ϕ14 P1.25	–	2	2.5 ~ 3.0	18.0 ~ 22.0	9
Starter motor clutch mounting bolts ϕ8 P1.25	•	3	3.3 ~ 3.7	24 ~ 27	49
Starter motor lead terminal nuts ϕ6 P1.0	–	2	0.4 ~ 0.6	35 ~ 52 in-lbs	50
Starter motor mounting bolts ϕ6 P1.0	•	2	0.9 ~ 1.1	78 ~ 95 in-lbs	49
Timing advancer mounting bolt ϕ8 P1.25	–	1	2.3 ~ 2.7	16.5 ~ 19.5	52

CHASSIS

Part	Locking Agent (•), Liquid Gasket (★) Required	Quantity	Metric (kg-m)	English (ft-lbs)	See Pg.
Brake pedal pivot cap nut φ8 P1.25	–	1	1.6 ~ 2.2	11.5 ~ 16.0	–
Disc brake parts	See Table 6 on Pg. 82.				
Front axle clamp nuts φ8 P1.25	–	4	1.6 ~ 2.2	11.5 ~ 16.0	80
Front axle nuts φ16 P1.5	–	2	7.0 ~ 9.0	51 ~ 65	80
Front brake light switch PT1/8	•	1	2.6 ~ 3.0	19.0 ~ 22.0	102
Front fork bottom Allen bolts φ10 P1.0	•, ★	2	2.0 ~ 2.6	14.5 ~ 19.0	105
Front fork clamp bolts					
upper φ8 P1.25	–	2	1.6 ~ 2.2	11.5 ~ 16.0	103
lower φ12 P1.25	–	2	3.4 ~ 4.6	25 ~ 33	103
Front fork top bolts φ28 P1.0	–	2	2.5 ~ 3.0	18.0 ~ 22.0	103
Handlebar clamp bolts φ8 P1.25	–	4	1.6 ~ 2.2	11.5 ~ 16.0	97
Pad mounting screws φ6 P1.0	•	2	–	–	83,215
Rear axle nut φ18 P1.5	–	1	10 ~ 14	72 ~ 101	18
Rear shock absorber mounting					
upper cap nuts φ12 P1.25	–	2	2.6 ~ 3.5	19.0 ~ 25	109
lower bolts φ10 P1.25	–	2	2.6 ~ 3.5	19.0 ~ 25	109
Rear sprocket nuts φ10 P1.25	–	6	3.6 ~ 4.4	26 ~ 32	88
Spokes	–	80	0.2 ~ 0.4	17 ~ 35 in-lbs	94
Steering stem head bolt φ16 P1.5	–	1	4.0 ~ 5.0	29 ~ 36	20
Steering stem head rear clamp bolt φ8 P1.25	–	1	1.6 ~ 2.2	11.5 ~ 16.0	20
Steering stem locknut φ30 P1.0	–	1	2.7 ~ 3.3	19.5 ~ 24	20
Swing arm pivot shaft nut φ16 P1.5	–	1	8 ~ 12	58 ~ 87	109
Torque link nuts φ12 P1.25	–	2	2.6 ~ 3.5	19 ~ 25	18

The table below, relating tightening torque to thread diameter and pitch, lists the basic torque for the bolts and nuts used on Kawasaki Motorcycles. However, the actual torque that is necessary may vary amoung bolts and nuts with the same thread diameter and pitch. The bolts and nuts listed on Pgs. 201 ~ 203 vary to a greater or lesser extent from what is given in this table. Refer to this table for only the bolts and nuts not included in the table on Pgs. 201 ~ 203. All of these values are for use with dry solvent cleaned threads.

Coarse threads

dia (mm)	pitch (mm)	kg-m	ft-lbs
5	0.80	0.35 ~ 0.50	2.5 ~ 3.5
6	1.00	0.6 ~ 0.9	4.5 ~ 6.5
8	1.25	1.6 ~ 2.2	11.5 ~ 16.0
10	1.50	3.1 ~ 4.2	22 ~ 30
12	1.75	5.4 ~ 7.5	39 ~ 54
14	2.00	8.3 ~ 11.5	60 ~ 83
16	2.00	13 ~ 18	94 ~ 130
18	2.50	18 ~ 25	130 ~ 181
20	2.50	26 ~ 35	188 ~ 253

Fine threads

dia (mm)	pitch (mm)	kg-m	ft-lbs
5	0.50	0.35 ~ 0.50	2.5 ~ 3.5
6	0.75	0.6 ~ 0.8	4.5 ~ 5.5
8	1.00	1.4 ~ 1.9	10.0 ~ 13.5
10	1.25	2.6 ~ 3.5	19.0 ~ 25
12	1.50	4.5 ~ 6.2	33 ~ 45
14	1.50	7.4 ~ 10.2	54 ~ 74
16	1.50	11.5 ~ 16	83 ~ 116
18	1.50	17 ~ 23	123 ~ 166
20	1.50	23 ~ 33	166 ~ 239

TROUBLESHOOTING GUIDE

Engine Doesn't Start; Starting Difficulty

Starter motor not rotating
- Starter motor defective
- Battery voltage low
- Relay not contacting or operating
- Starter button not contacting
- Wiring open or shorted
- Ignition switch defective
- Engine stop switch defective
- Fuse blown

Starter motor rotating but engine doesn't start
- Starter motor clutch defective
- Dynamo rotor bolt loosened
- Starter motor internal gear slipping

Engine won't turn over
- Valve seizure
- Cylinder, piston seizure
- Crankshaft seizure
- Connecting rod small end seizure
- Connecting rod big end seizure
- Transmission gear or bearing seizure
- Camshaft seizure
- Kickstarter return spring broken
- Kick ratchet gear not engaging
- Primary chain broken

No fuel flow
- No fuel in tank
- Fuel tap turned off
- Tank cap air vent obstructed
- Fuel tap clogged
- Fuel line clogged
- Float valve clogged

Engine flooded
- Fuel level too high
- Float valve worn or stuck open
- Starting technique faulty
- (When flooded, kick with the throttle fully open to allow more air to reach the engine.)

No spark; spark weak
- Ignition switch not on
- Engine stop switch turned off
- Battery voltage low
- Spark plug dirty, defective, or maladjusted
- Spark plug cap or high tension wiring defective
- Spark plug cap shorted or not in good contact
- Contact breaker points dirty or damaged
- Contact breaker point gap maladjusted
- Capacitor defective
- Ignition coil defective
- Ignition or engine stop switch shorted
- Wiring shorted or open

Compression low
- Spark plug loose
- Cylinder head not sufficiently tightened down
- No valve clearance
- Cylinder, piston worn
- Piston rings bad (worn, weak, broken, or sticking)
- Piston ring/land clearance excessive
- Cylinder head gasket damaged
- Cylinder head warped
- Valve lifter seizure
- Valve sticking
- Valve not closing
- Valve spring broken or weak
- Valve not seating properly (valve bent, warped, or worn)

Poor Running at Low Speed

Spark weak
- Battery voltage low
- Spark plug dirty, defective, or maladjusted
- Spark plug cap or high tension wiring defective
- Spark plug cap shorted or not in good contact
- Contact breaker points dirty or damaged
- Contact breaker point gap maladjsuted
- Capacitor defective
- Ignition coil defective

Fuel/air Mixture incorrect
- Pilot screw(s) maladjusted
- Pilot jet, or air passage clogged
- Air cleaner clogged, poorly sealed, or missing
- Starter plunger stuck open
- Fuel level too high or too low
- Fuel tank air vent obstructed
- Carburetor holders loose

Compression low
- Spark plug loose
- Cylinder head not sufficiently tightened down
- No valve clearance
- Cylinder, piston worn
- Piston rings bad (worn, weak, broken or sticking)
- Piston ring/land clearance excessive
- Cylinder head gasket damaged
- Cylinder head warped
- Valve lifter seizure
- Valve sticking
- Valve not closing
- Valve spring broken or weak
- Valve not seating properly (valve bent, warped, or worn)

Other
- Ignition timing maladjusted
- Timing not advancing (spring broken or stretched)
- Carburetors not synchronizing
- Engine oil viscosity too high
- Brakes dragging

Poor Running or No Power at High Speed

Firing incorrect
- Battery voltage low
- Spark plug dirty, defective, or maladjusted
- Spark plug cap or high tension wiring defective
- Spark plug cap shorted or not in good contact
- Contact breaker points dirty or damaged
- Contact breaker point gap maladjusted
- Capacitor defective
- Ignition coil defective
- Ignition timing maladjusted and/or timing not advancing
- Contact breaker spring weak

Fuel/air mixture incorrect
- Main jet clogged or wrong size
- Jet needle or needle jet worn
- Jet needle clip in wrong position

Fuel level too high or too low
Needle jet bleed hole clogged
Air cleaner clogged, poorly sealed, or missing
Starter plunger stuck open
Water or foreign matter in fuel
Carburetor holders loose
Fuel tank air vent obstructed
Fuel tap clogged
Fuel line clogged

Compression low
Spark plug loose
Cylinder head not sufficiently tightened down
No valve clearance
Cylinder, piston worn
Piston rings bad (worn, weak, broken, or sticking)
Piston ring/land clearance excessive
Cylinder head gasket damaged
Cylinder head warped
Valve lifter seizure
Valve sticking
Valve not closing
Valve spring broken or weak
Valve not seating properly (valve bent, warped, or worn)

Knocking
Ignition timing maladjusted
Carbon built up in combustion chamber
Fuel poor quality or incorrect
Overheating

Miscellaneous
Throttle valve won't fully open
Vacuum pistons don't slide smoothly
Damaged diaphragm
Ignition timing maladjusted
Timing not advancing
Balancer mechanism malfunctioning
Brakes dragging
Clutch slipping
Overheating
Engine oil level too high
Engine oil viscosity too high

Overheating

Firing incorrect
Spark plug dirty, damaged, or maladjusted
Ignition timing maladjusted

Fuel/air mixture incorrect
Main jet clogged
Fuel level too low
Carburetor holders loose
Air cleaner clogged, poorly sealed, or missing

Compression high
Carbon built up in combustion chamber

Engine load faulty
Clutch slipping
Engine oil level too high
Engine oil viscosity too high
Brakes dragging

Lubrication inadequate
Engine oil level too low
Engine oil poor quality or incorrect

Clutch Operation Faulty

Clutch slipping
No clutch lever play
Friction plates worn or warped
Steel plates worn or warped
Clutch springs weak
Clutch release maladjusted
Clutch inner cable catching
Clutch release mechanism defective
Clutch hub or housing unevenly worn

Clutch not disengaging properly
Clutch lever play excessive
Clutch plates warped or too rough
Clutch spring tension uneven
Engine oil deteriorated
Engine oil of too high a viscosity
Engine oil level too high
Clutch housing frozen on drive shaft
Clutch release mechanism defective
Loose clutch hub nut

Gear Shifting Faulty

Doesn't go into gear; shift pedal doesn't return
Clutch not disengaging
Shift fork(s) bent or seized
Gear(s) stuck on the shaft
Shift drum positioning pin binding
Shift return spring weak or broken
Shift lever broken
External shift mechanism pawl broken
Shift return spring pin loose
External shift mechanism arm spring broken

Jumps out of gear
Shift fork(s) worn
Gear groove(s) worn
Gear dogs, dog holes, and/or dog recesses worn
Shift drum groove(s) worn
Shift drum positioning pin spring weak or broken
Shift fork pin(s) worn
Drive shaft, output shaft, and/or gear splines worn

Overshifts
Shift return spring pin loose
Shift drum positioning pin spring weak or broken
External shift mechanism arm spring weak or broken

Abnormal Engine Noise

Knocking
Ignition timing maladjusted
Carbon built up in combustion chamber
Fuel poor quality or incorrect
Overheating

Piston slap
Cylinder/piston clearance excessive
Cylinder, piston worn
Connecting rod bent
Piston pin, piston holes worn

Valve noise
Valve clearance incorrect
Valve spring broken or weak
Camshaft bearings worn
Valve lifter worn

Other noise
- Connecting rod small end clearance excessive
- Connecting rod big end clearance excessive
- Piston ring(s) worn, broken, or stuck
- Piston seizure damage
- Cylinder head gasket leaking
- Exhaust pipe leaking at cylinder head connection
- Crankshaft runout excessive
- Engine mounts loose
- Crankshaft bearings worn
- Primary chain, chain guides worn
- Starter motor chain worn
- Balancer chain, chain tensioner worn
- Camshaft chain tensioner defective
- Camshaft chain, sprocket, guides worn
- Camshaft chain requires adjustment
- Balancer mechanism springs weak or broken

Abnormal Drive Train Noise

Clutch noise
- Clutch housing/friction plate clearance excessive
- Weak or damaged shock absorber spring(s)

Transmission noise
- Bearings worn
- Transmission gears worn or chipped
- Metal chips jammed in gear teeth
- Engine oil insufficient
- Kick ratchet gear not properly disengaging from kick gear

Drive chain noise
- Drive chain adjusted improperly
- Chain worn
- Rear and/or engine sprocket(s) worn
- Chain lubrication insufficient
- Rear wheel misaligned

Abnormal Frame Noise

Front fork shock absorber noise
- Oil insufficient or too thin
- Spring weak or broken

Rear shock absorber noise
- Shock absorber defective

Disc brake noise
- Pad B loose
- Pad A installed reversely
- Pad surface glazed
- Disc warped
- Caliper seal defective
- Cylinder damaged

Other noise
- Brackets, nuts, bolts, etc. nor properly mounted or tightened

Oil Pressure Indicator Light Goes On

- Engine oil pump defective
- Engine oil screen clogged
- Engine oil level too low
- Engine oil viscosity too low
- Camshaft bearings worn
- Crankshaft bearings worn
- Oil pressure indicator light switch defective
- Wiring defective
- Relief valve stuck open

Exhaust Smokes Excessively

White smoke
- Piston oil ring worn
- Cylinder worn
- Valve oil seal damaged
- Valve guide worn
- **O** rings at the cylinder oil passage orifice are damaged
- Engine oil level too high

Black smoke
- Air cleaner clogged
- Main jet too large or fallen off
- Starter plunger stuck open
- Fuel level too high

Brown smoke
- Main jet too small
- Fuel level too low
- Air cleaner ducts loose
- Air cleaner poorly sealed or missing

Handling and/or Stability Unsatisfactory

Handlebar hard to turn
- Steering stem locknut too tight
- Bearing balls damaged
- Race(s) dented or worn
- Steering stem lubrication inadequate
- Steering stem bent
- Tire air pressure too low

Handlebar shakes or excessively vibrates
- Tire(s) worn
- Swing arm bush and sleeve worn
- Rim(s) warped, or not balanced
- Spokes loose
- Wheel bearing(s) worn
- Handlebar clamps loose
- Steering stem head bolt and/or clamp bolt loose

Handlebar pulls to one side
- Frame bent
- Wheel misalignment
- Swing arm bent or twisted
- Steering stem bent
- Front fork shock absorber(s) bent
- Right/left front fork shock absorber oil level uneven
- Right/left rear shock absorbers unbalanced

Shock absorption unsatisfactory

Too hard:
- Front fork oil excessive
- Front fork oil viscosity too high
- Tire air pressure too high
- Shock absorber maladjusted
- Front fork shock absorber(s) bent

Too soft:
- Front fork oil insufficient and/or leaking
- Front fork oil viscosity too low
- Front fork, rear shock absorber spring(s) weak
- Rear shock absorber oil leaking

Brakes Don't Hold

- Air in the brake line
- Pad or disc worn

Brake fluid leak
Contaminated pads
Brake fluid deteriorated
Primary or secondary cup defective
Master cylinder scratched inside

Battery Discharged

Battery faulty (e.g., plates sulphated, shorted through sedimentation, electrolyte level too low)
Battery leads making poor contact
Load excessive (e.g., bulb of excessive wattage)
Rectifier defective
Ignition switch defective
Regulator defective
Armature coil open or short
Field coil open
Wiring faulty

Battery Overcharged

Regulator defective
Battery defective

NOTE: This is not an exhaustive list, giving every possible cause for each problem listed. It is meant simply as a rough guide to assist the troubleshooting for some of the more common difficulties. Electrical troubleshooting is not covered here due to its complexity. For electrical problems, refer to the appropriate heading in the Maintenance Section.

FLOW CHART
Engine Removal

The following charts are intended to be aids to proper removal. Select the component you wish to remove and follow the arrows to that point on the chart.

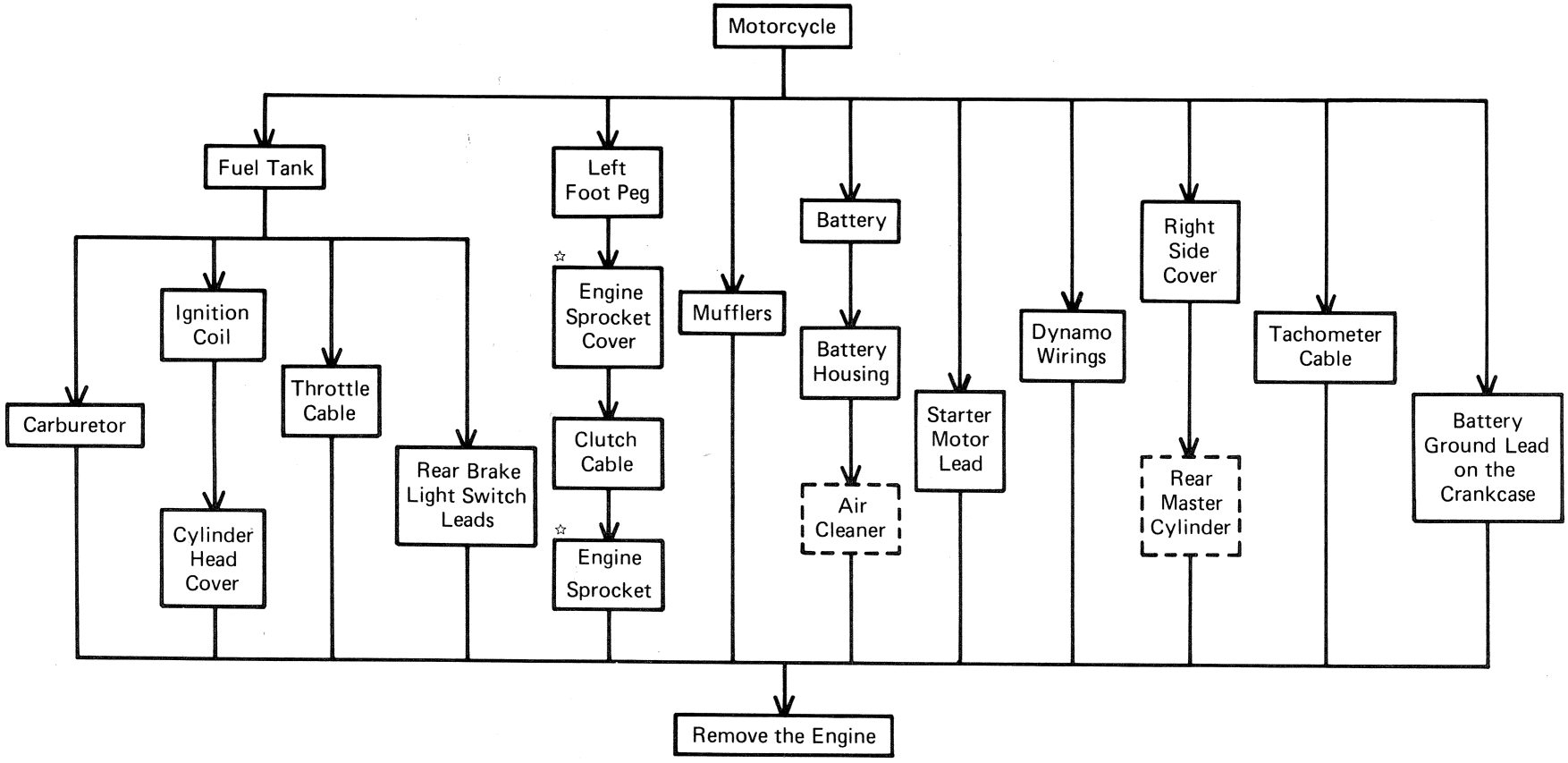

NOTES: 1. Action with a mark (☆) requires special tool(s) for removal, installation, disassembly, or assembly.

2. Parts in the broken line are required to remove its mounting bolts, but not necessary its complete removal for engine removal.

FLOW CHART
Engine Disassembly

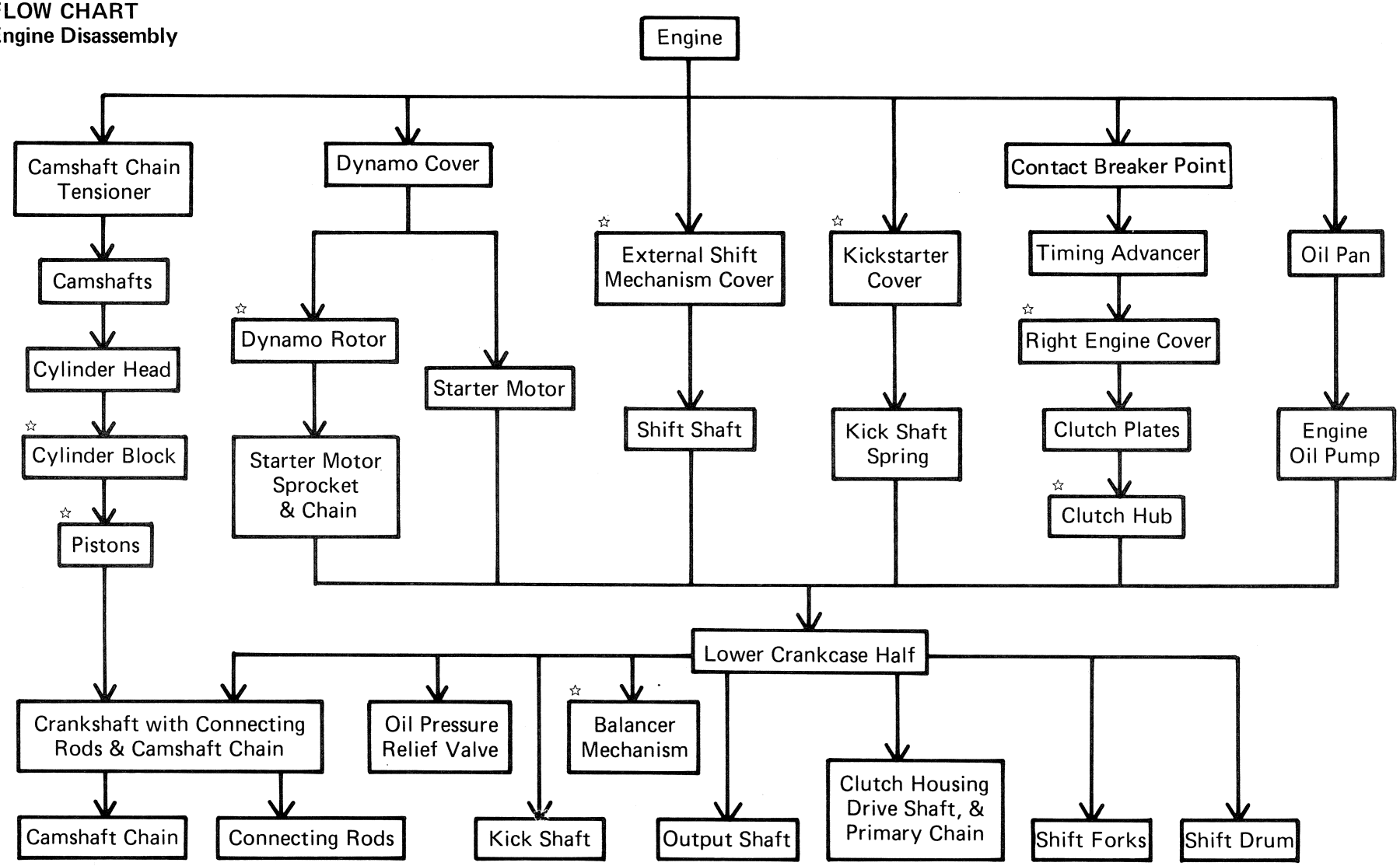

NOTES: 1. Action that has been already done in the engine removal procedure is omitted. Action that is not necessarily required for engine disassembly off the motorcycle is also omitted.
2. Action with a mark (☆) requires special tool(s) for removal, installation, disassembly, or assembly.

FLOW CHART
Engine Component Removal

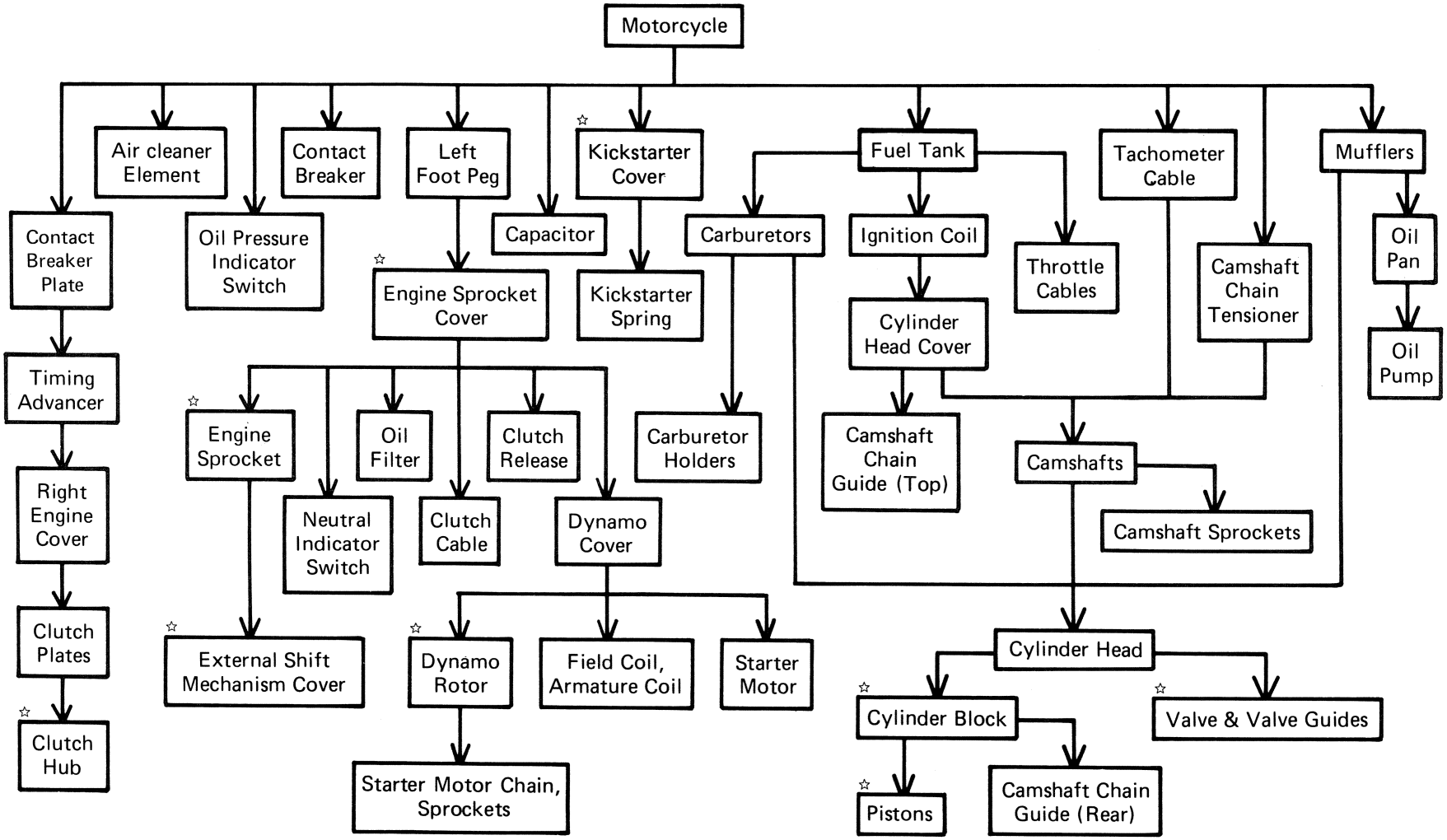

NOTES: 1. Before performing any disassembly operations, remove the ground (—) lead from the battery to prevent the possibility of accidentally turning the engine over.
2. Action with a mark (☆) requires special tool(s) for removal, installation, disassembly, or assembly.

FLOW CHART
Frame Component Removal

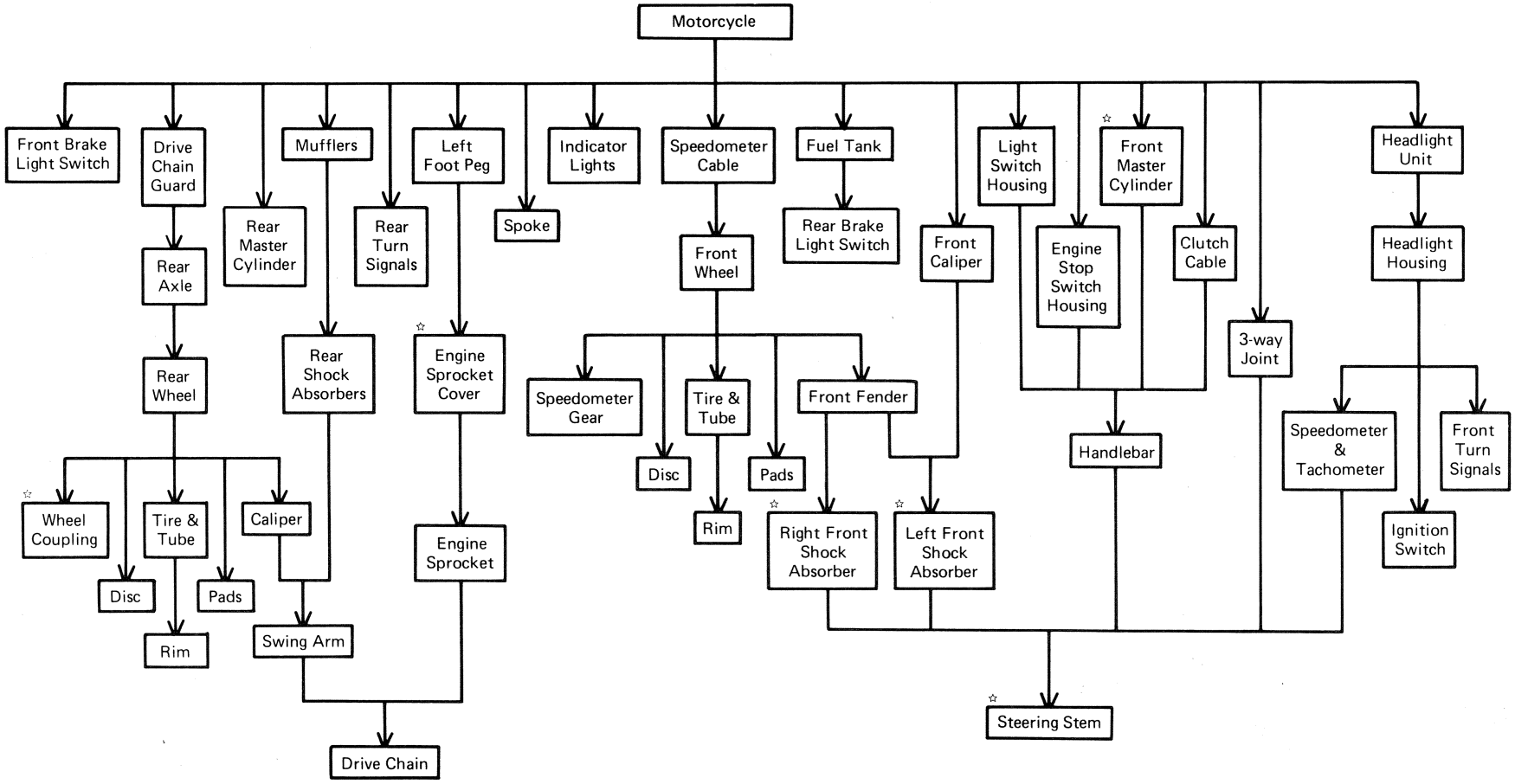

NOTE: Action with a mark (☆) requires special tool(s) for removal, installation, disassembly, or assembly.

KZ750-B1 Wiring Diagram (US, Canadian Model)

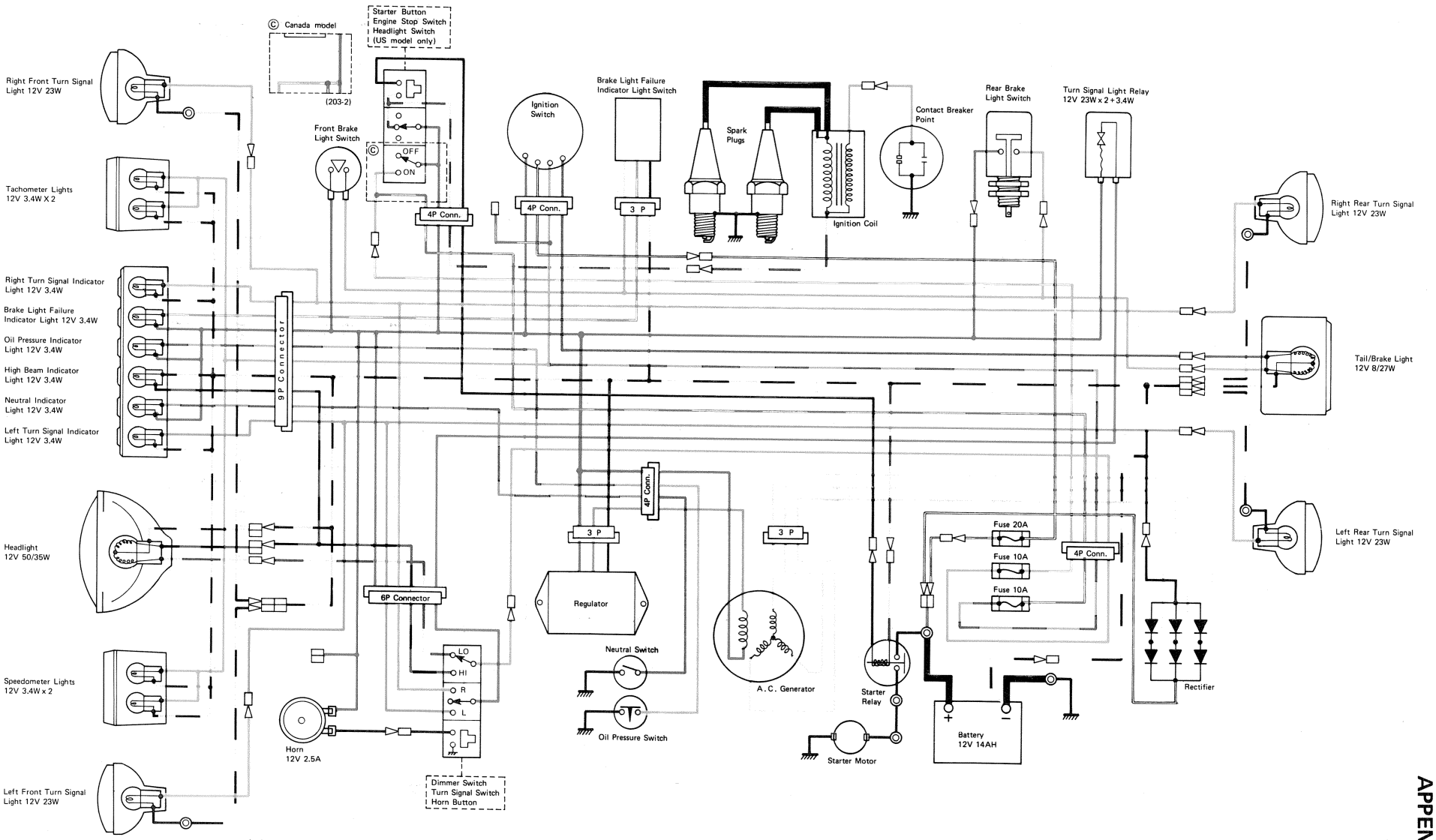

Left Handlebar Switch Connections

Horn Button			Dimmer Switch					Turn Signal Switch			
Color	Black	⌇⌇⌇	Color	Bk/R	Blue	R/Y	Brown	Color	Green	Orange	Slate
OFF			HI	●	●			Left	●	●	
ON	●	●	LO		●	●					
								Right		●	●

Ignition Switch Connections

Lead	Ignition	Battery	Tail 1.	Tail 2.
Color	Brown	White	Blue	Red
OFF				
ON	●	●	●	
PARK		●	●	

Right Handlebar Switch Connections

Starter Button			Engine Stop Switch			Headlight Switch			
Color	Black	R/Y	Color	R/Y	Brown	Color	Bl/W		Brown
			OFF			OFF			
OFF			RUN	●	●				
ON	●	●	OFF			ON	●		●

(180-4)

KZ750-B1 Wiring Diagram (European Model)

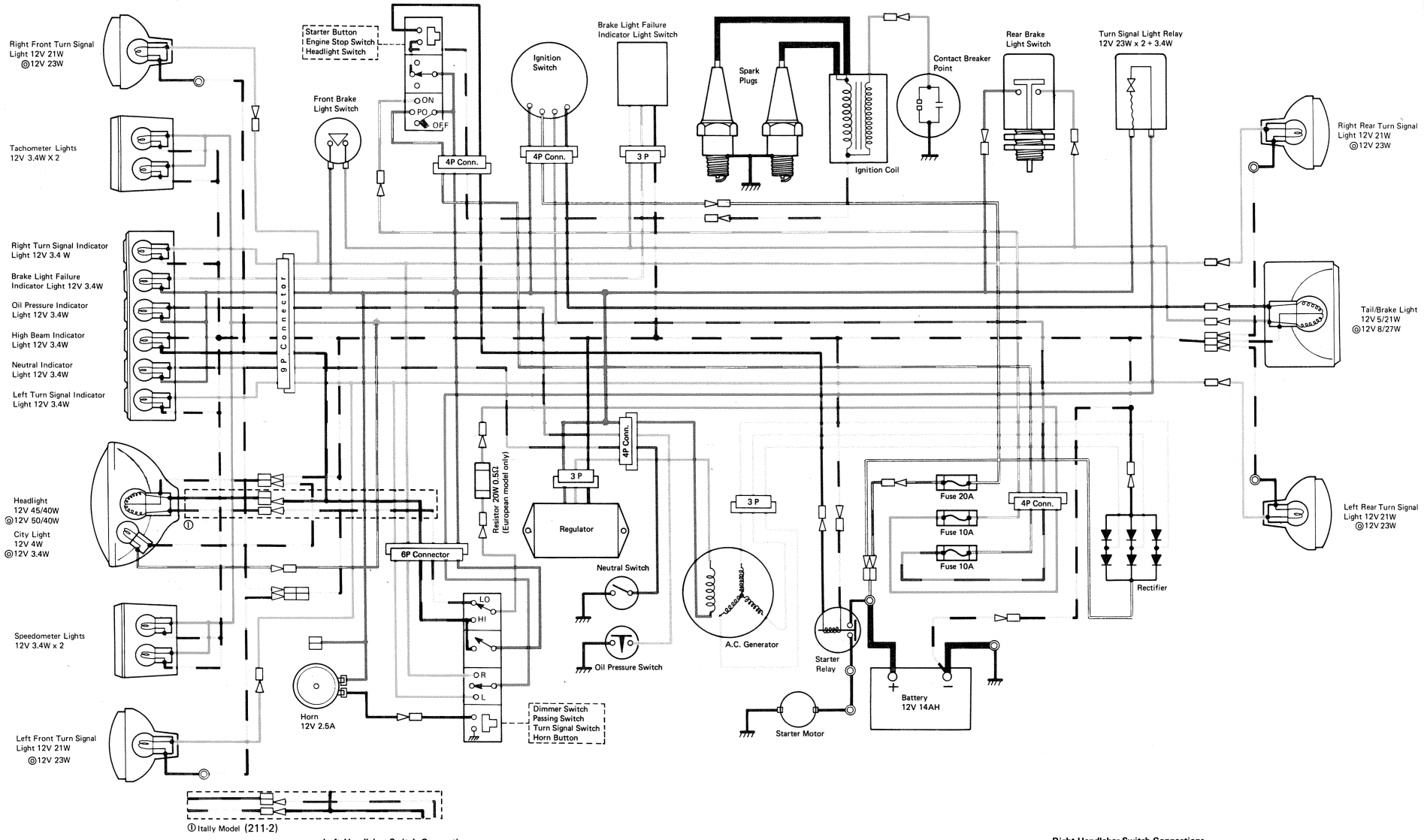

Left Handlebar Switch Connections

Passing Switch			Dimmer Switch					Turn Signal Switch				Horn Button		
Color	Brown	Bk/R	Color	Bk/R	Blue	Bk/Y	Brown	Color	Green	Orange	Slate	Color	Black	
			HI	●				Left	●					
PASS	●											ON		●
			LO		●			Right		●	●			

Ignition Switch Connections

Leads	Battery	Ignition	Tail 1.	Tail 2.
Color	White	Brown	Blue	Red
OFF				
ON	●		●	
PARK	●		●	

Right Handlebar Switch Connections

Headlight Switch				Starter Button			Engine Stop Switch		
Color	Brown	Bl/W	Br/W	Color	Black	R/Y	Color	Brown	R/Y
OFF							OFF		
PO	●		●	ON	●		RUN	●	
ON	●	●	●				OFF		

(202-2)

Supplement

Disassembly

FRONT DISC BRAKE

NOTE: Refer to the CAUTION and WARNING (Pg. 82) for general disc brake information.

Pad Removal ('78 and later models):

- Remove the caliper mounting bolts, lockwashers, and flat washers (2 ea).
- Lift the caliper off the disc, take out the mounting screw for pad B, and remove the pad. A lockwasher and metal plate also come off.

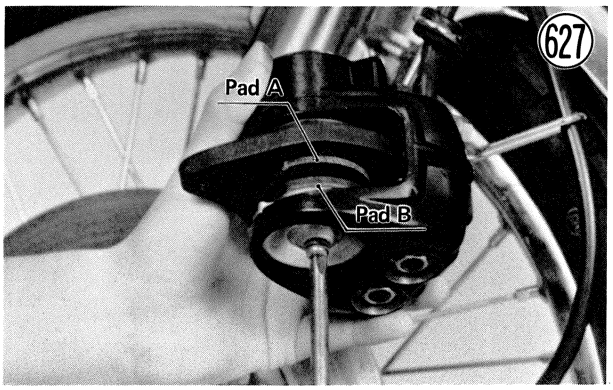

- After pad B is removed, slide the caliper holder to the piston side and remove pad A.

Pad Installation:

- Remove the bleed valve cap on the caliper, attach a clear plastic hose to the bleed valve, and run the other end of the hose into a container.
- Open (loosen) the valve slightly, push the piston in by hand as far as it will go, and then close (tighten) the valve. Wipe up any spilled fluid, and recap the bleed valve.

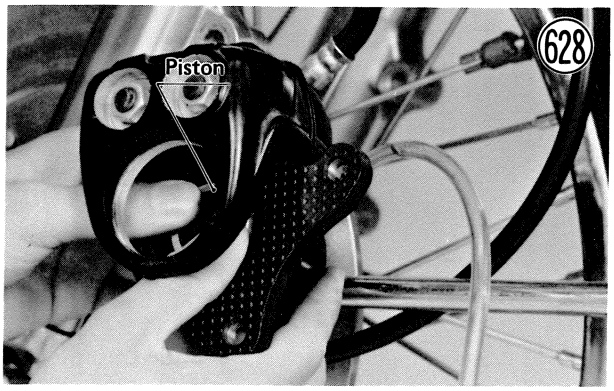

- Install pad A in the caliper holder.

NOTE: Fit pad A into the caliper holder so that the shim on pad A is toward the front of the motorcycle.

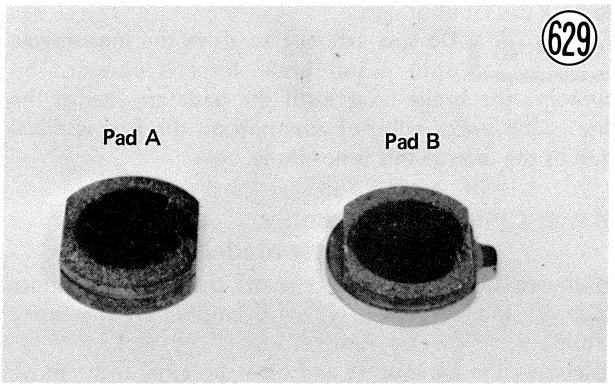

Pad A Installation

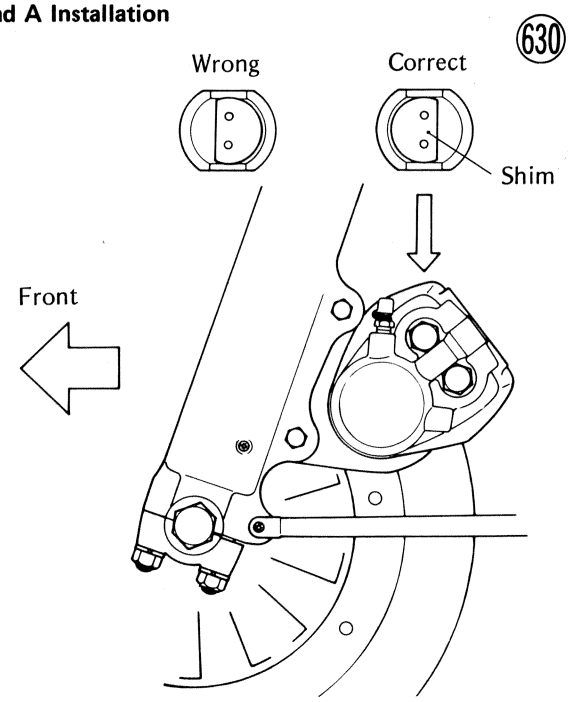

- Fit pad B, aligning the tongue on the pad with the groove in the caliper. Install the metal plate, lockwasher and mounting screw; using a non-permanent locking agent on the screw.

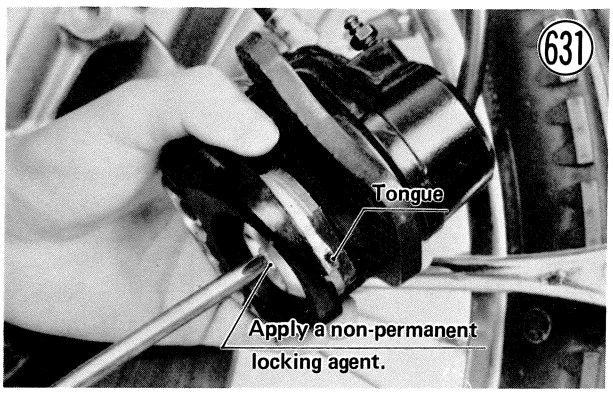

- Install the caliper, tightening the caliper mounting bolts to 3.4~4.6 kg-m (25~33 ft-lbs) of torque. Each mounting bolts has a flat washer and lockwasher.
- Since brake fluid was spilled when the bleed valve was opened, check the fluid level in the master cylinder and bleed the air from the brake system (Pg. 161).
- Check the front brake.

WARNING **Do not attempt to drive the motorcycle until a full brake lever is obtained by pumping the brake lever until the pads are against the disc. The brake will not function on the first application of the lever if this is not done.**

Master Cylinder Disassembly ('78 and later models)

- Remove the screws (4), take off the master cylinder cap ② and diaphragm ④, and empty out the brake fluid.
- Remove the locknut ⑬ and pivot bolt ⑪, and remove the brake lever ⑫.
- Using a thin-bladed screwdriver or some other suitable tool, press in the liner tabs which catch in the holes in the master cylinder, and then remove the liner ⑳.

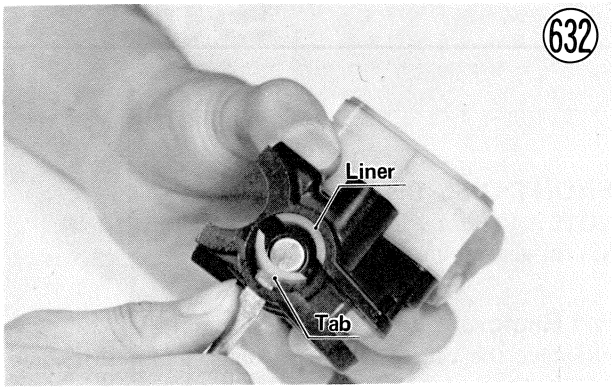

- Pull out the piston and spring unit.

Master Cylinder Assembly Notes:

1. Before assembly, clean all parts including the master cylinder with brake fluid or alcohol (See CAUTION – Pg. 82). Apply brake fluid to the parts removed and to the inner wall of the cylinder.
2. Be sure that the piston stopper ⑱ is between the piston and dust seal ⑲.

Front Master Cylinder

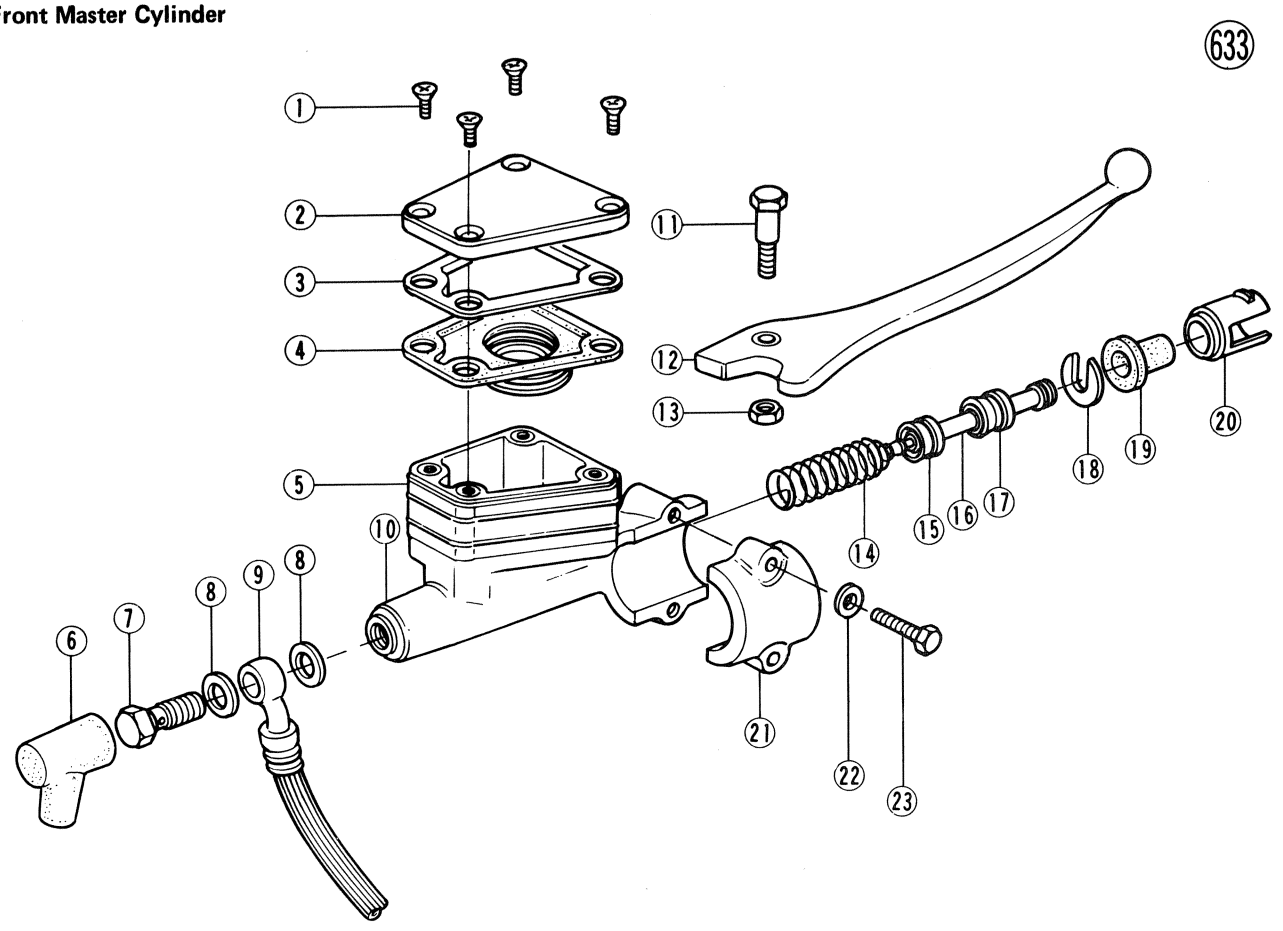

1. Screw
2. Cap
3. Diaphragm Plate
4. Diaphragm
5. Reservoir
6. Dust Cover
7. Banjo Bolt
8. Flat Washer
9. Hose Fitting
10. Master Cylinder
11. Pivot Bolt
12. Brake Lever
13. Locknut
14. Spring
15. Primary Cup
16. Piston
17. Secondary Cup
18. Piston Stopper
19. Dust Seal
20. Liner
21. Clamp
22. Flat Washer
23. Bolt

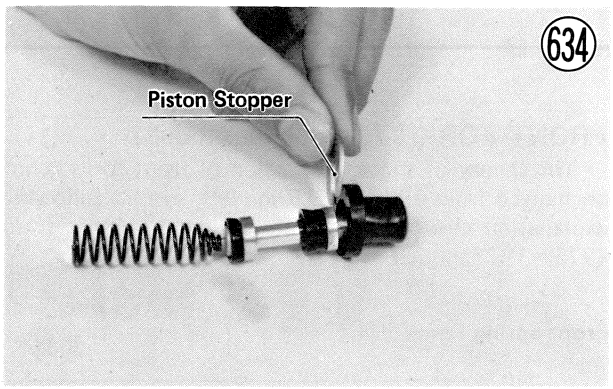

Circlip, Splined Washer Installation

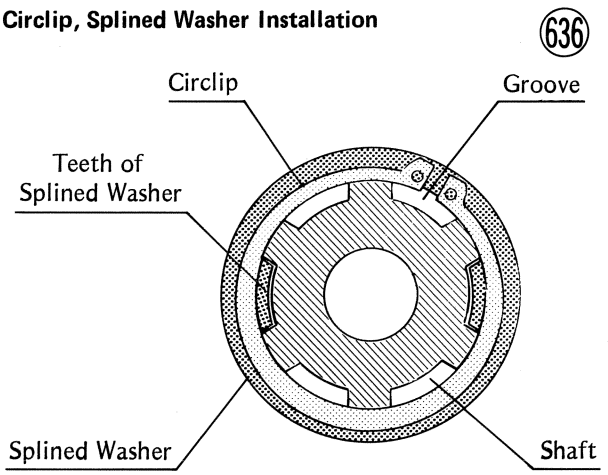

TRANSMISSION

Output Shaft ('78 and later models):

Disassembly:

- Pull off the needle bearing outer race.
- Remove the circlip, and pull off the needle bearing, steel washer, and copper washer.
- Pull off 1st gear ⑰.
- 4th gear has three steel balls assembled into it for neutral positioning. To remove this gear with the balls, quickly spin the shaft in a vertical position while holding 3rd gear, and pull off 4th gear upwards.

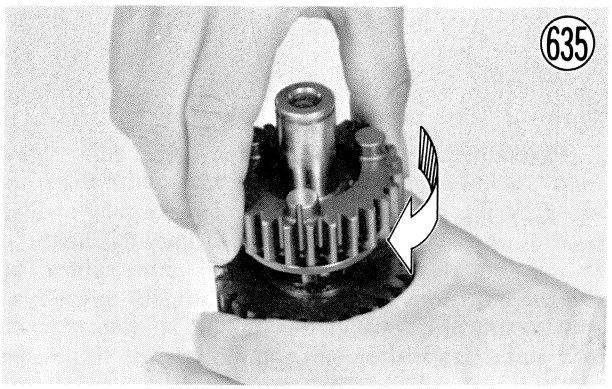

- Remove the circlip ⑮, and pull off the splined washer ⑭, 3rd gear ⑬, and another splined washer ⑫.
- Remove the circlip ⑪, and pull off 5th gear ⑩.
- Remove the circlip ⑨, and pull off the splined washer ⑧ and 2nd gear ⑦.
- Remove the output shaft ball bearing ⑤ using the stem bearing puller (special tool).

Assembly Notes:

1. Install the output shaft ball bearing using the transmission circlip driver (special tool).
2. Replace any circlips that were removed with new ones. Install the circlip so that its opening coincides with one of the splined grooves in the output shaft.
3. Install the splined washer so that its teeth do not coincide with the circlip opening.
4. Do not use grease on the three balls during assembly; these balls must be able to move freely.
5. Be sure that all parts are put back in the correct sequence and all circlips and splined washers are properly in place. Proper sequence starting with the engine sprocket side is 2nd gear, splined washer, circlip, 5th gear, circlip, splined washer, 3rd gear, splined washer circlip, 4th gear, 1st gear, copper washer, steel washer, needle bearing, circlip, and needle bearing outer race.
6. The output shaft gear sizes are opposite from those of the drive shaft gears, the largest being 1st gear and the smallest, 5th gear.

Output Shaft Gears

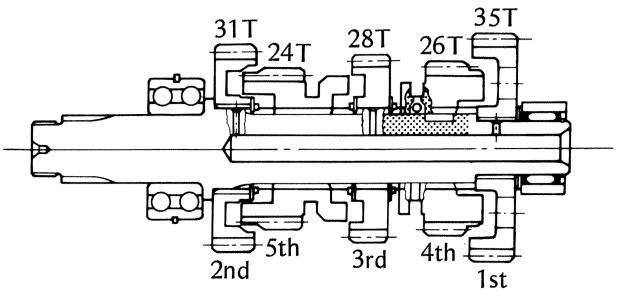

Maintenance

ENGINE LUBRICATION

Relief Valve (ball type)

Relief valve inspection

Check to see if the steel ball inside the valve slides smoothly when pushing it in with a wooden or other soft rod, and see if it comes back to its seat by valve spring pressure.

NOTE: Inspect the valve in its assembled state. Disassembly and assembly may change the valve performance.

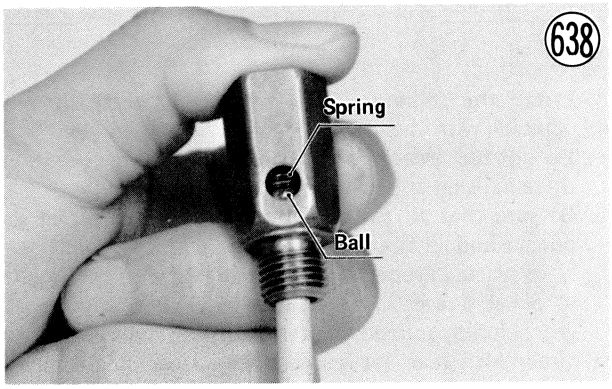

If any rough spots are found during the above inspection, wash the valve clean with a high flash-point solvent and blow out any foreign particles that may be in the valve with compressed air.

If cleaning does not solve the problem, replace the relief valve as an assembly. The relief valve is precision made with no allowance for replacement of individual parts.

DISC BRAKES ('78 and later models)

The basic theory of the disc brakes on both 1976~1977 models and 1978 and later models is the same, so that the following explanation covers only the service data for the disc brakes on 1978 and later models.

NOTE: Refer to Pgs. 162~163 for other service informance not specifically mentioned here.

FRONT FORK ('78 and later models)

The theory of shock absorption of front forks is not unchanged from 1976~1977 models, so that following explanation covers only the service data different from 1976~1977 models.

Front Spring Force 639

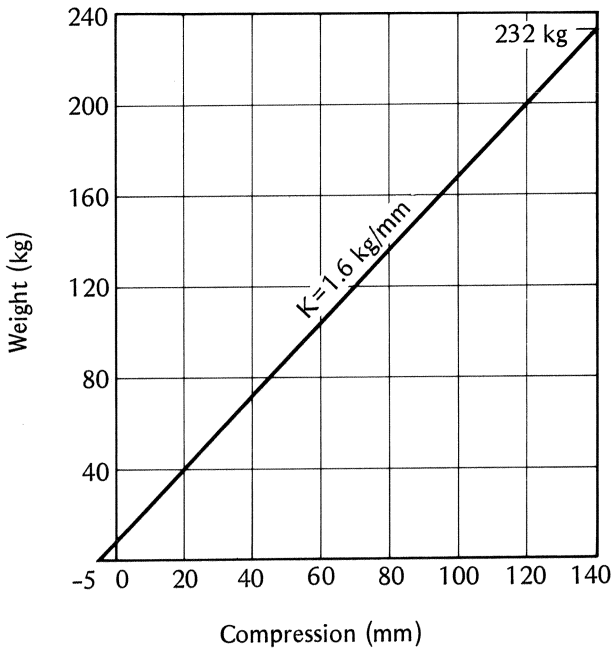

Fork oil

To drain out the old oil, remove the drain screw from the lower end of the outer tube. With the front wheel on the ground and the front brake fully applied push down on the handlebar a few times to pump out the oil. Install the drain screw, remove the rubber cap and top bolt from the inner tube, and pour in the type and amount of oil specified in Table 124. Check the oil level and install the top bolt and rubber cap. If the oil is below the specified level, add oil and recheck the oil level.

NOTE: After the front fork oil is changed, before checking the oil level, pump the forks several times to expel air from the upper and lower chambers.

Table 123 Master Cylinder Parts ('78 and later models)

		Single Disc		Dual Disc (Optional)	
		Standard	Service Limit	Standard	Service Limit
Front	Cylinder Inside Diameter	14.000~14.063 mm	14.10 mm	15.870~15.913 mm	15.95 mm
	Piston Outside Diameter	13.957~13.984 mm	13.90 mm	15.827~15.854 mm	15.77 mm
	Primary Cup Diameter	14.2~14.6 mm	14.05 mm	16.15~16.65 mm	16.00 mm
	Secondary Cup Diameter	14.65~15.15 mm	14.50 mm	16.55~17.05 mm	16.40 mm
	Spring Free Length			36.6~40.6 mm	34.7 mm

Table 124 Fork Oil

Type	Filling fork oil capacity		Oil Level
	When changing oil	After disassembly and completely dry	
SAE 15W	about 150 cc	176~184 cc	411 mm from top of inner tube

To check the fork oil level, first place a jack or stand under the engine so that the front wheel is raised off the ground. Remove the rubber cap and top bolt from the inner tube. Insert a rod down into the tube, and measure the distance from the top of the inner tube to the oil level. If the oil is below the correct level, add enough oil to bring it up to the proper level, taking care not to overfill.

Fork Oil Level

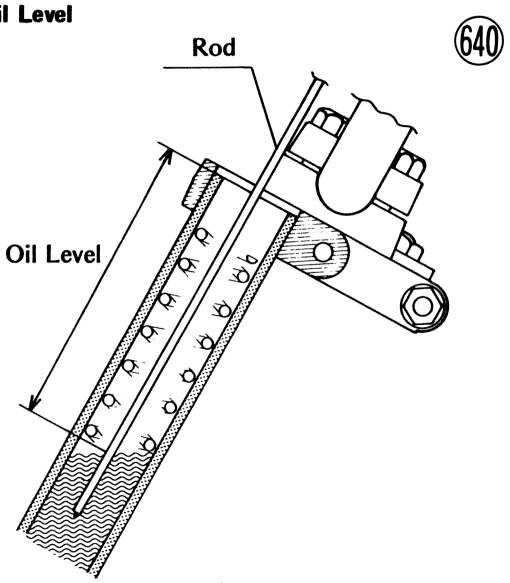

Spring tension

Table 125 Fork Spring Free Length

Standard	Service Limit
496 mm	485 mm

CHARGING SYSTEM ('78 and later models)

The charging system consists of a dynamo (an alternator) and regulator/rectifier.

The dynamo generates the current required by the electrical circuits. The generated current is a single phase alternating current (AC), which is changed to direct current (DC) and controlled by a solid state regulator/rectifier unit to supply an even voltage to the circuit components.

There are a number of important precautions that are musts when servicing the charging system. Cautions that are applied to the individual sections are mentioned in each section. Failure to observe these rules can result in serious system damage. Learn and observe all the rules in each section.

Charging System

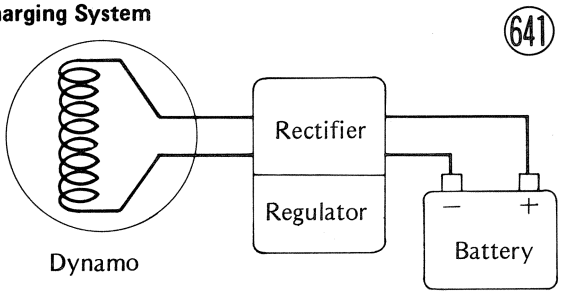

When there are any problem indications in the charging system, give the system a quick initial inspection or check before starting a series of time consuming tests, or worse yet, removing parts for repair or replacement. Such a check will often turn up the source of the trouble.

Make sure all connectors in the circuit are clean and tight. Examine wires for signs of burning, fraying, etc. Poor wires and bad connections will affect electrical system operation. Check the dynamo and regulator/rectifier for evidence of physical damage.

A worn out or badly sulphated battery will produce numerous problems that cannot be corrected until the battery is replaced. **ALWAYS CHECK BATTERY CONDITION BEFORE CONDEMNING OTHER PARTS OF THE SYSTEM. A FULLY CHARGED BATTERY IS A MUST FOR CONDUCTING ACCURATE SYSTEMS TESTS.**

Charging system malfunctions can be traced to either the battery, dynamo, regulator/rectifier, or the wiring. Troubles may involve one unit or in some cases, all units. Never replace a defective unit without determining what **CAUSED** the failure. If the failure was brought on by some other unit or units, they too must be repaired or replaced, or the new replacement will soon fail.

Initial inspection

Before making this test, check the condition of the battery (Pg. 176). If the battery voltage is less than 12 volts, charge the battery. Before starting the charging voltage test warm up the engine to obtain actual dynamo operating conditions.

- Unlock the seat, and swing it open.
- Set the multimeter to the 20V DC range, and connect the meter + lead to the battery + terminal and the meter – lead to the battery – terminal.

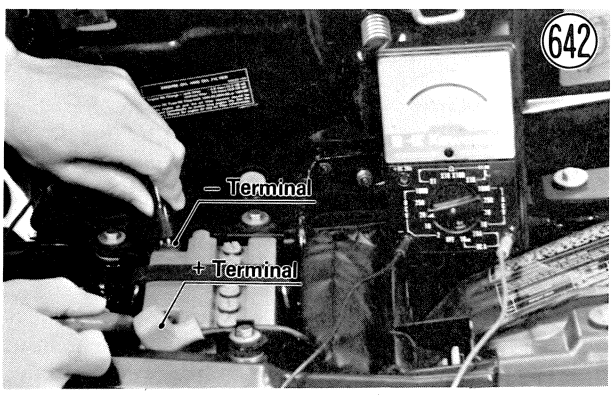

●Start the engine, and run the engine at the rpm in Table 126. Note the voltage reading.

Table 126 Charging Voltage

Meter	Connections	Reading @4,000 rpm
20V DC	Meter (+) → Battery (+) Meter (–) → Battery (–)	about 14.5 V

●If the reading is more than 16V, the regulator/rectifier is defective, and should be replaced with a new one. If the reading is less than 14V, check the dynamo output (Pg. 220) and regulator/rectifier (Pg. 221) to determine which part is defective.

Dynamo

The dynamo, fundamentally a single phase A.C. generator, can be divided up into a moving part called the flywheel ⑤, which is taper fitted to one end of the crankshaft ⑧, and a stationary part called the armature ④, which is located inside the flywheel and fixed to the inside of the dynamo cover ①. The flywheel has 6 permanent magnets evenly spaced in its circumference to generate an alternating current with 6 cycles per flywheel revolution.

Dynamo Construction

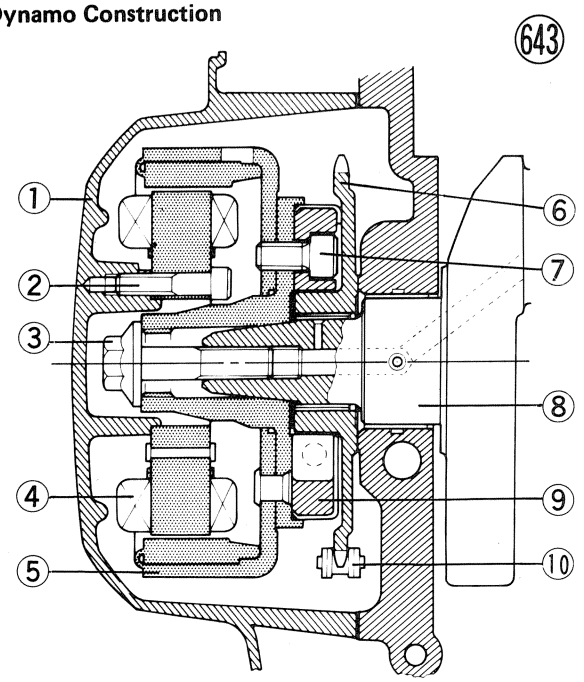

1. Dynamo Cover
2. Allen Bolt
3. Flywheel Bolt
4. Dynamo Armature
5. Dynamo Flywheel
6. Starter Sprocket
7. Allen Bolt
8. Crankshaft
9. Starter Clutch
10. Starter Chain

Dynamo failure

If the battery, regulator/rectifier, leads, and connectors are all good, but there is still low voltage or insufficient charging current, the dynamo may be defective. There are three types of dynamo failures: short, open (wire burned out), or loss in flywheel magnetism. A short or open in the armature coil will result in either a low output, or no output at all. A loss in flywheel magnetism, which may be caused by dropping or hitting the flywheel, leaving it near an electromagnetic field, or just by aging, will result in low output.

Dynamo output test

Before starting dynamo output test warm up the engine to obtain actual dynamo operating condition.

●Remove the engine sprocket cover, and disconnect the yellow leads from the dynamo. Set the multimeter to the 250V AC scale, and connect the meter leads to the yellow leads.

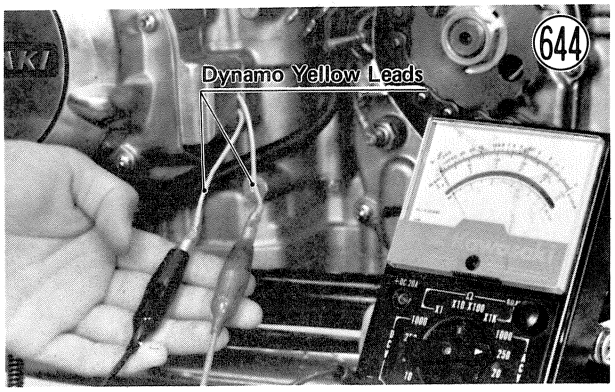

●Start the engine, run it at the rpm given in Table 127, and note the voltage reading. A much lower reading than that given in the table indicates that the dynamo is defective.

Table 127 Dynamo Output

Meter	Reading @4,000 rpm
250V AC	about 75V

Armature resistance check

●Disconnect the meter leads from the dynamo leads.

●Set the multimeter to the x 1 Ω range, and measure for continuity between the yellow leads. If there is more resistance than shown in Table 128, or no meter reading, the armature has an open and must be replaced.

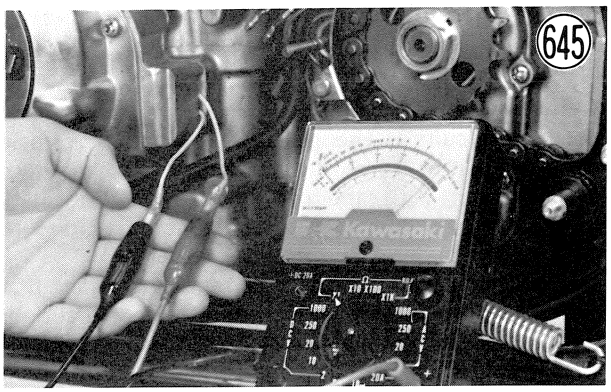

Table 128 Armature Resistance

Meter	Reading
x 1 Ω	about 0.32 Ω

●Using the highest resistance range of the multimeter, measure the resistance between each of the yellow leads and chassis ground. Any meter reading less than infinity (∞) indicates a short, necessitating armature replacement.

If the armature windings have normal resistance, but the voltage check showed the dynamo to be defective, then the flywheel magnets have probably weakened, and the flywheel must be replaced.

Regulator/Rectifier

This motorcycle has a regulator and rectifier as a unit. The regulator/rectifier functions cannot be checked separately because it is a solid-state type, and must be replaced as a unit should it become defective.

CAUTION When inspecting the regulator/rectifier, observe the following to avoid damage to the regulator/rectifier.

1. **Do not disconnect the regulator/rectifier with the ignition switch on. This may damage the regulator/rectifier.**
2. **Do not disconnect the battery leads while the engine is running. This may damage the regulator/rectifier.**

Regulator/Rectifier (646)

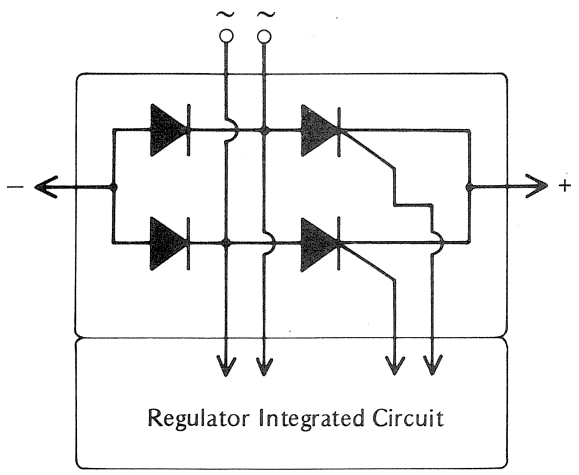

The rectifier is used to change the alternating current (AC) from the dynamo to direct current (DC) for the battery charging, ignition, lighting, and other circuits. It contains two silicon diodes and thyristors. The diodes and thyristors are connected in a bridge circuit arrangement for efficient, full-wave rectification.

1. Diode

The current of electrons flows only from the – to the + side of the diode. However, a defective diode will conduct in both directions (a short) or not conduct at all (an open). If any of the diodes is shorted or open, the voltage from the rectifier will be below normal, and the battery may not be charged adequately.

Diode Current Flow (647)

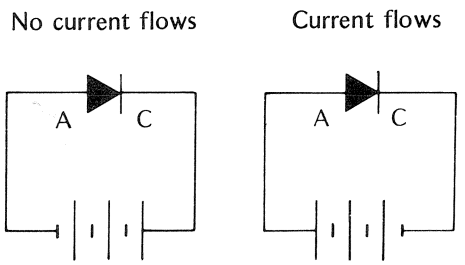

2. Thyristor

The current of electrons will flow from the cathode to the anode but will not flow in the reverse direction. The thyristor differs from a diode in two respects: (a) even though a voltage of the correct polarity (negative to cathode) may be applied, the thyristor will not coduct until a signal is received at the gate input lead; (b) once started, it will not stop conducting (even if the gate lead signal voltage stops) until the anode to cathode voltage is removed or reversed.

Thyristor (648)

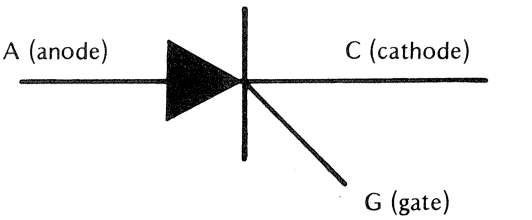

The solid-state regulator limits dynamo output voltage to a maximum of 14.0~15.0 volts. Since it contains no contacts or other moving parts, it does not wear out and never needs to be adjusted. According to the dynamo output, the regulator circuit sends signals to the rectifier thyristors to keep the output voltage at specified value.

Inspection

Before testing the regulator/rectifier out of circuit, check the charging voltage (Pg. 219) and the dynamo output (Pg. 220).

●Remove the left side cover.

●With the ignition switch turned off, disconnect the regulator/rectifier 3-pin connector.

●Using an ohmmeter, check the resistance between the black lead and each yellow lead as shown in Table 129. The resistance should be as shown in the table. If any two leads are low or high in both directions, the regulator/rectifier is defective and must be replaced.

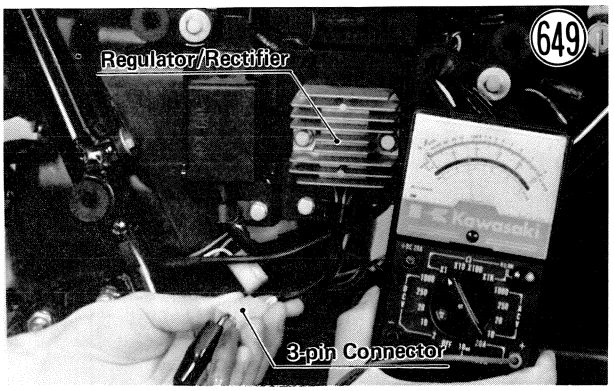

Table 129 Regulator/Rectifier Resistance

Meter	Connections	Reading
x 1 Ω	Meter (+) → Yellow Lead Meter (–) → Black Lead	less than 20 Ω
x 1 kΩ	Meter (+) → Black Lead Meter (–) → Yellow Lead	more than 100 kΩ

NOTE: If the regulator/rectifier check is good with the above procedure but still does not appear to be operating correctly in the circuit, check it by trial replacement with a good unit.

IGNITION SWITCH ('79 and later model)

Testing the switch

Table 130 shows the internal connections of the ignition switch for each switch position. To check the switch, disconnect the plug (6-pin) from the switch in the headlight housing, and use an ohmmeter to verify that all the connections listed in the table are making contact (zero ohms between those wires), and that no other wires are connected. If there are any opens or shorts in the switch, replace it with new one.

Table 130 Ignition Switch Connection

Color	Brown	White	Yellow	Blue	Red
OFF					
ON	●	●	●	●	●
PK		●			●
Lead	TL3	BAT.	IG.	TL1	TL2

KZ750-B2 Wiring Diagram
(US, Canadian Model)

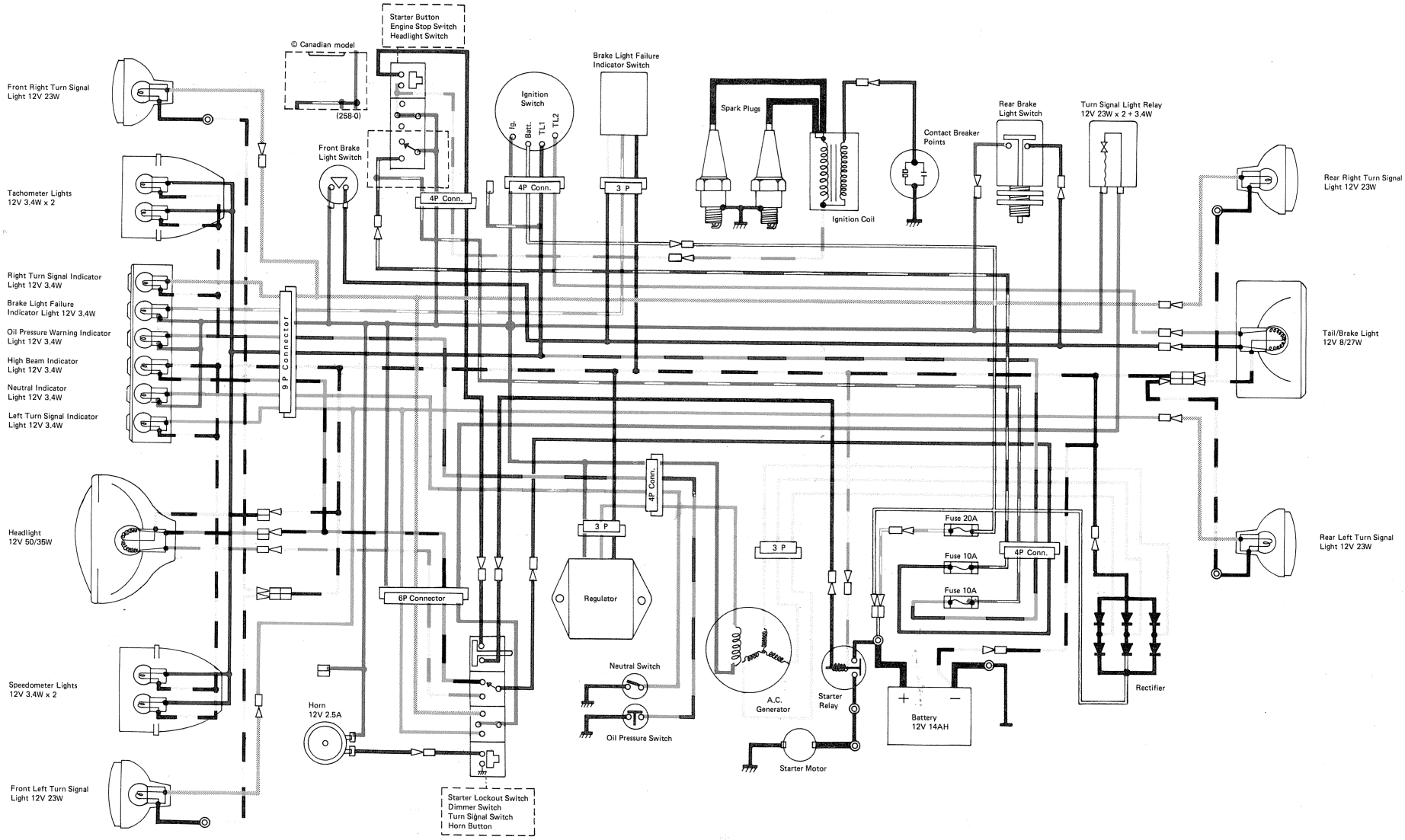

LEFT HANDLEBAR SWITCH CONNECTIONS

Starter Lockout Switch			Horn Button			Dimmer Switch					Turn Signal Switch			
Color	Black	Black	Color	Black		Color	Bk/Y	Blue	R/Y	Brown	Color	Green	Orange	Slate
			OFF			HI	●				Left	●		
ON	●	●	ON	●	●	LO		●						
											Right			●

IGNITION SWITCH CONNECTIONS

Lead	Ignition	Battery	Tail 1	Tail 2
Color	Brown	White	Blue	Red
OFF				
ON	●		●	●
PARK		●		●

(257-0)

RIGHT HANDLEBAR SWITCH CONNECTIONS

Starter Button			Engine Stop Switch			Headlight Switch		
Color	Black	R/Y	Color	R/Y	Brown	Color	Br/W	Brown
			OFF			OFF		
OFF			RUN	●	●			
ON	●	●	OFF			ON	●	●

Z750-B2 Wiring Diagram
(European Model)

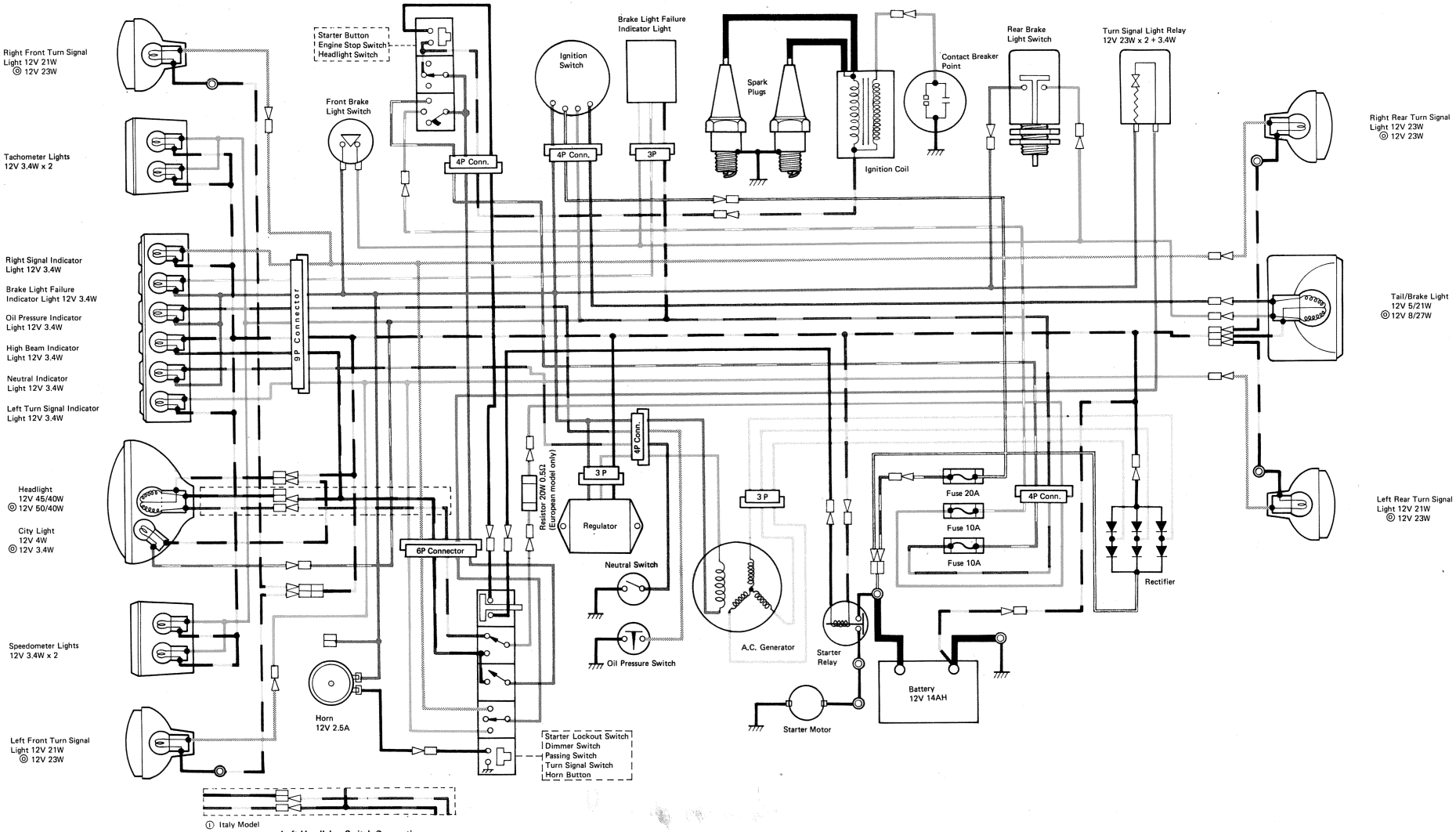

① Italy Model (261-0)

ⓞ Other model except European model (259-0)

Left Handlebar Switch Connections

Passing Switch			Dimmer Switch					Turn Signal Switch				Horn Button		
Color	Brown	Bk/R	Color	Bk/R	Blue	Bk/Y	Brown	Color	Green	Orange	Slate	Color	Black	⫽⫽
			HI	●	●			Left	●	●				
PASS	●	●										ON	●	●
			LO		●	●		Right		●	●			

Ignition Switch Connections

Lead	Battery	Ignition	Tail 1.	Tail 2.
Color	White	Brown	Blue	Red
OFF				
ON	●	●	●	
PARK	●			●

(260-0)

Right Handlebar Switch Connections

Headlight Switch				Starter Button			Engine Stop Switch		
Color	Brown	Bl/W	Br/W	Color	Black	R/Y	Color	Brown	R/Y
OFF							OFF		
PO	●	●	●	ON	●	●	RUN	●	
ON	●	●	●				OFF		

KZ750-B3 Wiring Diagram
(US, Canadian Model)

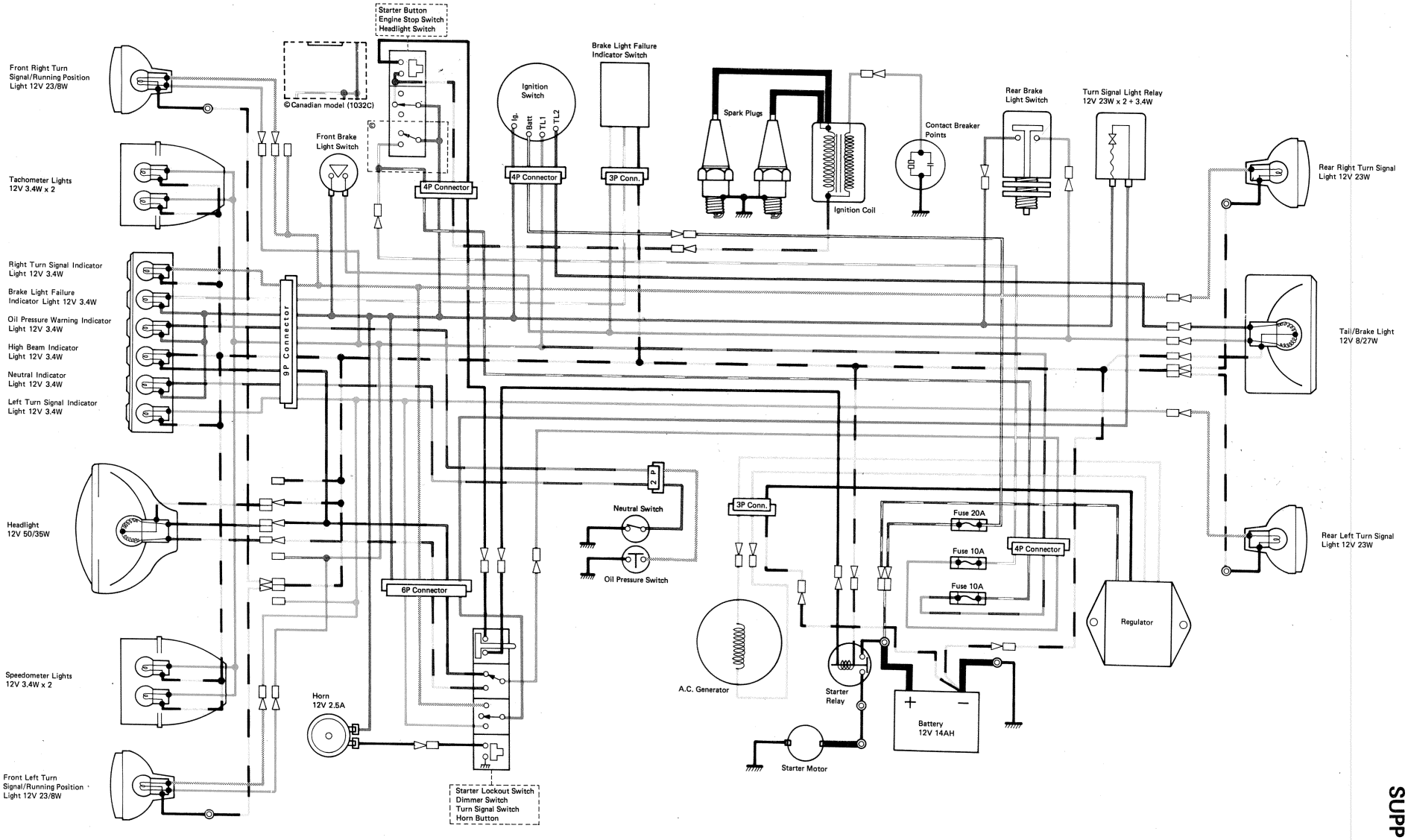

LEFT HANDLEBAR SWITCH CONNECTIONS

Starter Lockout Switch			Hron Button			Dimmer Switch				Turn Signal Switch			
Color	Black	Black	Color	Black	⏦	Color	R/Bk	Blue	R/Y	Color	Green	Orange	Gray
			OFF			HI	●						
ON	●	●	ON	●	●	LO		●	●	Left	●	●	
										Right		●	●

IGNITION SWITCH CONNECTIONS

Lead	Ignition	Battery	Tail 1	Tail 2
Color	Brown	White	Blue	Red
OFF				
ON	●		●	●
PARK		●	●	●

(1026D)

RIGHT HANDLEBAR SWITCH CONNECTIONS

Starter Button			Engine Stop Switch			Headlight Switch		
Color	Black	Y/R	Color	Y/R	Brown	Color	Bl/W	Brown
			OFF			OFF		
OFF			RUN	●	●	ON	●	●
ON	●	●	OFF					

Z750-B3 Wiring Diagram (European Model)

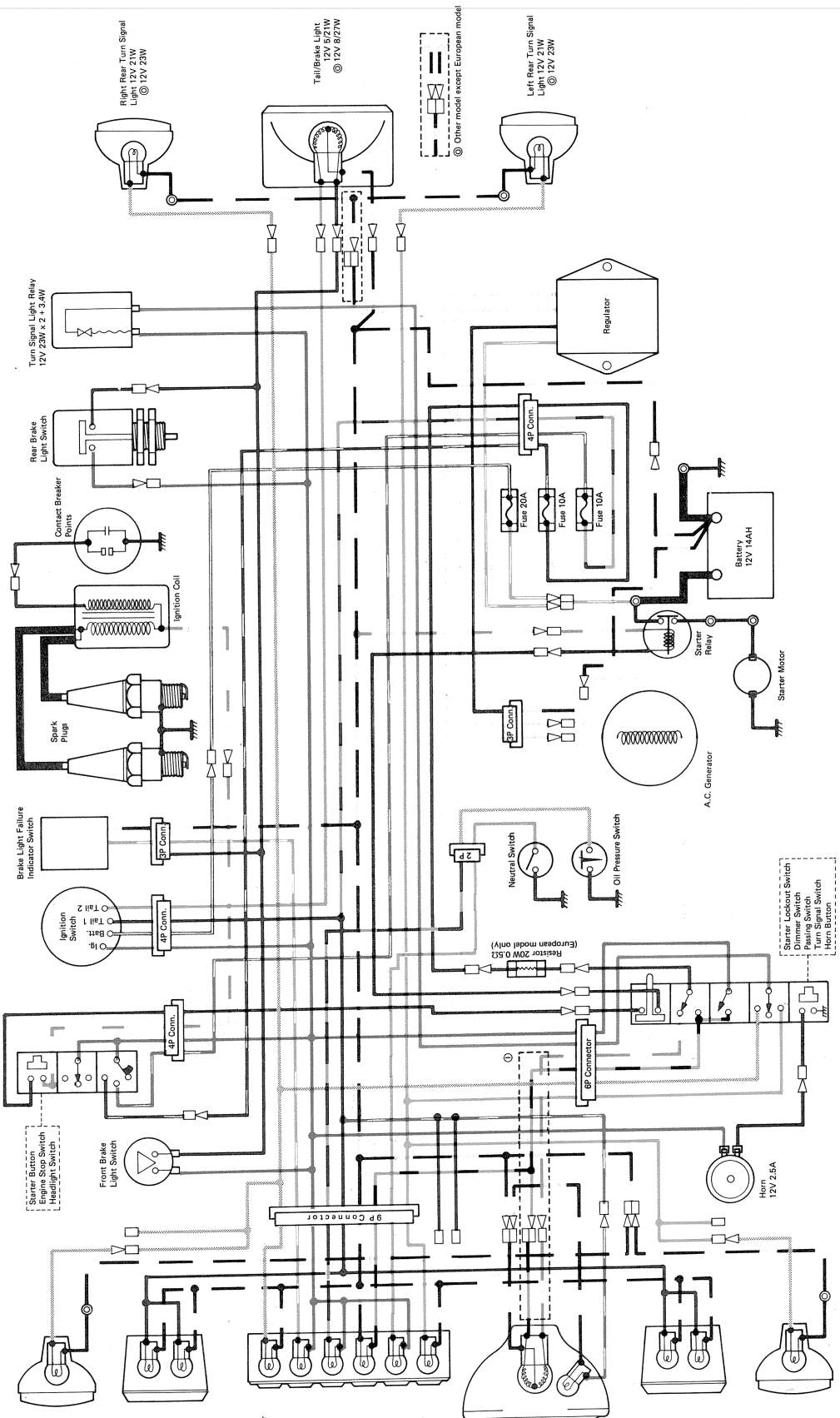

Left Handlebar Switch Connections

Starter Lockout Switch			Passing Switch			Dimmer Switch			Turn Signal Switch					Horn Button	
Color	Black	Black	Color	Brown	R/Bk	Color	R/Bk	Blue	R/Y	Color	Green	Orange	Gray	Color	Black
○										Left					
ON			PASS			HI								ON	
						LO				Right					

Ignition Switch Connections

Lead	Battery	Ignition	Tail. 1	Tail. 2
Color	White	Brown	Blue	Red
OFF				
ON				
PARK				

(1034A)

Right Handlebar Switch Connections

Headlight Switch			Starter Button			Engine Stop Switch		
Color	Brown	Bl/W	Color	Black	Y/R	Color	Brown	Y/R
OFF								
○						OFF		
ON			ON			RUN		
						OFF		

KZ750-B4 Wiring Diagram
(Canadian Model)

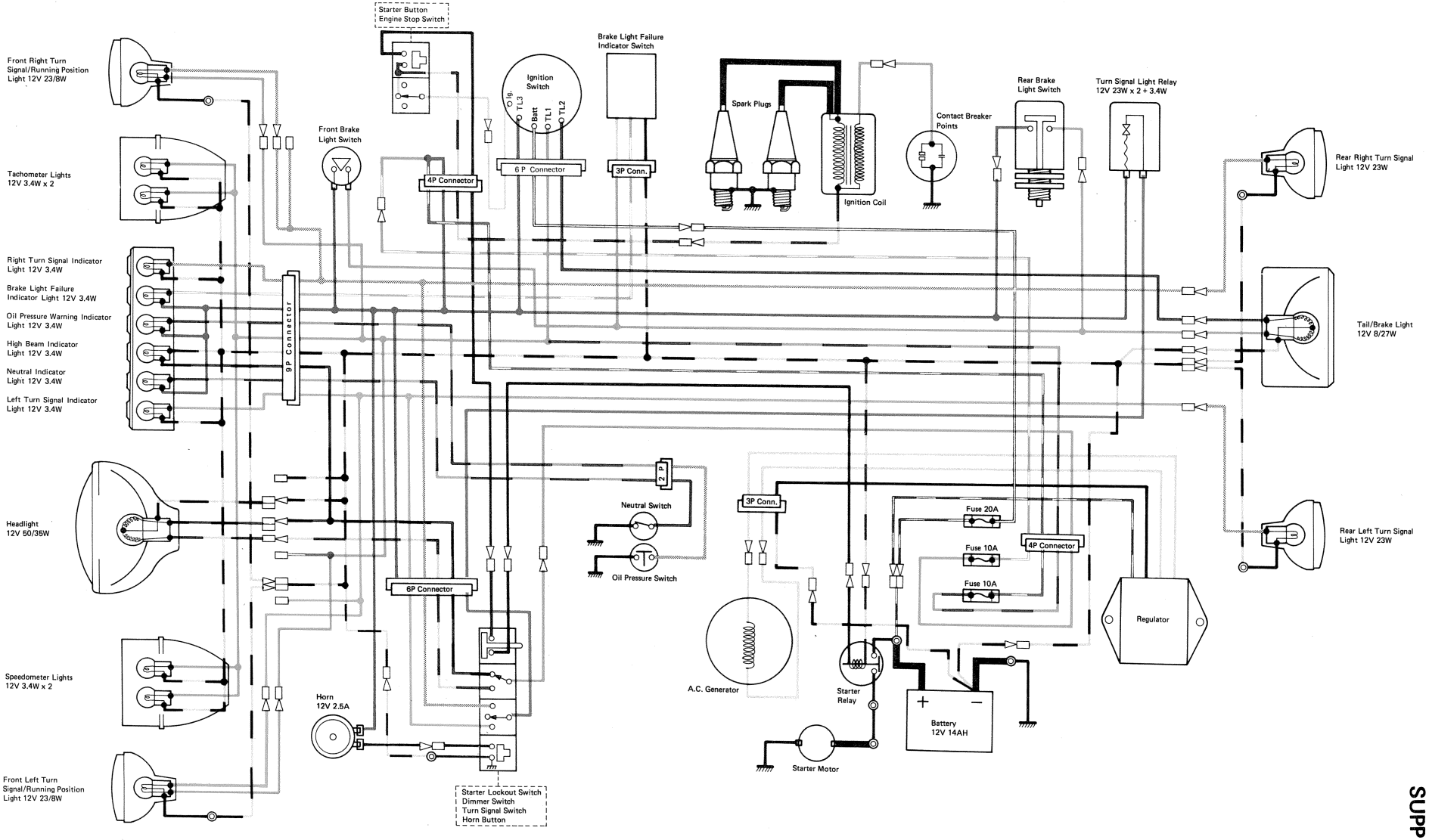

LEFT HANDLEBAR SWITCH CONNECTIONS

Starter Lockout Switch			Hron Button			Dimmer Switch					Turn Signal Switch			
Color	Black	Black	Color	Black	⌒⌒⌒	Color	R/Bk	Blue	R/Y		Color	Green	Orange	Gray
			OFF			HI	●	●			Left	●	●	
ON	●	●	ON	●	●	LO		●	●					
											Right		●	●

Ignition Switch Connections

	Tail 3	Battery	Ignition	Tail 1	Tail 2
Color	Brown	White	Yellow	Blue	Red
OFF					
ON	●	●	●	●	
PARK		●	●	●	

(1116A)

RIGHT HANDLEBAR SWITCH CONNECTIONS

Starter Button			Engine Stop Switch		
Color	Black	Y/R	Color	Y/R	Brown
			OFF		
OFF			RUN	●	●
ON	●	●	OFF		

Z750-B4 Wiring Diagram
(European Model)

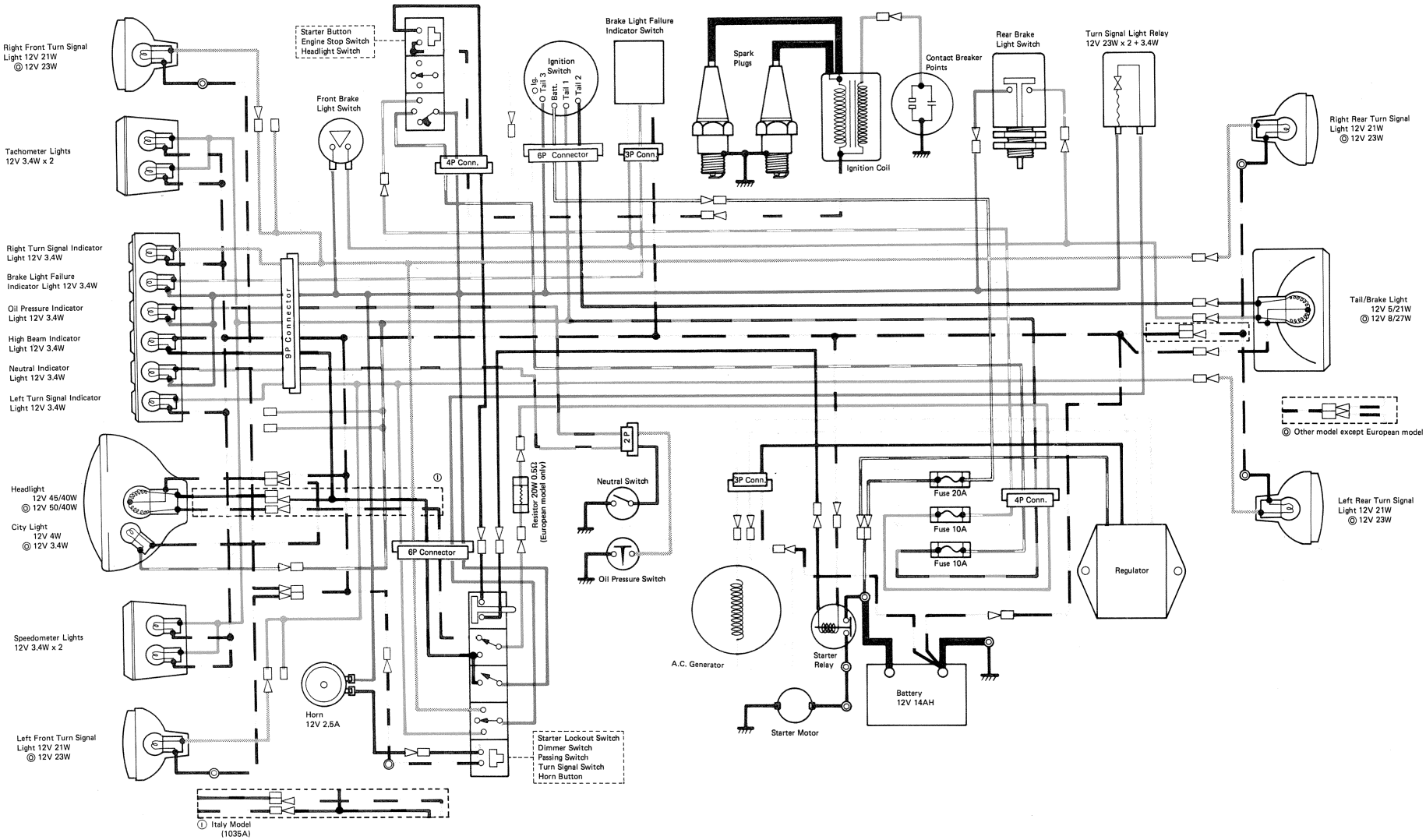

Left Handlebar Switch Connections

Starter Lockout Switch			Passing Switch			Dimmer Switch				Turn Signal Switch				Horn Button		
Color	Black	Black	Color	Brown	R/Bk	Color	R/Bk	Blue	R/Y	Color	Green	Orange	Gray	Color	Black	//////
						HI	●	●		Left	●					
ON	●	●	PASS	●	●							●		ON	●	●
						LO		●		Right		●				

IGNITION SWITCH CONNECTIONS

	Tail 3	Battery	Ignition	Tail 1	Tail 2
Color	Brown	White	Yellow	Blue	Red
OFF					
IGNITION	●	●	●	●	●
PARK		●			●

(1123A)

Right Handlebar Switch Connections

Headlight Switch				Starter Button			Engine Stop Switch		
Color	Brown	Bl/W	Br/W	Color	Black	Y/R	Color	Brown	Y/R
OFF							OFF		
○	●	●	●	ON	●	●	RUN	●	●
ON	●	●	●				OFF		

Index

Air Cleaner 30, 112
Axle 154

Balancer Mechanism 75, 134
Battery 176
Brake 18, 82, 90, 157, 215, 218
Brake Light Circuit 188
Brake Light Switch 19, 102, 188
Breather 59, 149

Cable
  Clutch 94
  Speedometer 97
  Tachometer 97
  Throttle 13, 95
Caliper
  Front 83, 162
  Rear 90, 162
Camshaft 37, 119
Camshaft Chain 11, 77, 121
Camshaft Chain Guide 79, 121
Camshaft Chain Tensioner 121
Camshaft Sprocket 40
Capacitor 52, 179
Carburetor 14, 33, 112
Chain
  Balancer 136
  Camshaft 11, 77, 121
  Drive 17, 111, 155
  Primary 77, 139
  Starter Motor 49, 185
Chain Guide (Camshaft) 79, 121
Chain Tensioner
  Balancer 77, 136
  Camshaft 121
Circuit
  Brake Light 188
  Headlight 186
  Starter Motor 182
  Turn Signal 190
Clutch 16, 53, 136
Clutch Cable 94
Clutch Hub 53
Clutch Plate 53, 138
Clutch Release 55, 136
Coil
  Dynamo Armature 40, 173, 220
  Dynamo Field 46, 173
  Ignition 51, 179
Connecting Rod 78, 131
Contact Breaker 51, 179
Crankshaft 77, 131
Cylinder 43, 127
Cylinder Head 40, 122

Disc Brake
  Front 18, 82, 157, 215, 218
  Rear 18, 90, 157
Drive Chain 17, 111, 155
Dynamo 46, 48, 170, 220

Engine 23
Engine Lubrication 145, 196
Engine Oil Pump 60, 148
Engine Oil Seal 149
Engine Performance Curves 7
Engine Sprocket 55, 156
External Shift Mechanism 57

Flow Chart for Disassembly 209
Front Brake Light Switch 102, 188
Front Disc Brake 18, 82, 157, 215, 218
Front Fork 102, 164, 218
Front Hub 80
Front Wheel 79, 150
Fuel Tank 32, 150

Grease Seal 154

Handlebar 96
Headlight 21, 98, 186
Headlight Circuit 186
Horn 21, 191
Hub
  Clutch 53
  Front 53, 80
  Rear 88

Ignition Coil 51, 179
Igntion Switch 100, 186, 222
Ignition System 178
Ignition Timing 9
Illuminator Light 98
Indicator Light 99
Introduction to Disassembly 22

Kickstarter 73, 144
Kickstarter Spring 58

Master Cylinder
  Front 85, 157, 216
  Rear 91, 157
Muffler 32, 170

Neutral Indicator Switch 56, 141

Oil Breather 149
Oil Filter 31, 149, 196
Oil Pressure Indicator Switch 102, 147
Oil Pressure Relief Valve 74, 148, 218
Oil Pump 60, 148

Periodic Maintenance 195
Piston 44, 127
Piston Ring 44, 130
Point Gap 9
Primary Chain 77, 139

Rear Disc Brake 88, 90, 157
Rear Hub 88
Rear Shock Absorber 17, 108, 168

Rear Wheel 87, 150
Rear Wheel Coupling 88, 155
Rectifier 173, 221
Regulator 174, 221
Regulator/Rectifier 221
Relief Valve 74, 148, 218
Rim 94, 153
Running Performance Curves 8

Shock Absorber
  Front 102, 164, 218
  Rear 17, 108, 168
Spark Plug 9, 181
Special Tools 192
Specifications 5
Speedometer 98, 191
Speedometer Cable 97
Speedometer Gear Housing 80
Spoke 94, 153
Sprocket
  Camshaft 40
  Clutch Housing 138
  Engine 55, 156
  Rear 88, 156
  Starter Motor 49
Starter Motor 49, 182
Starter Motor Chain 49, 185
Starter Motor Circuit 182
Starter Motor Clutch 48, 185
Starter Motor Sprocket 49
Steering 19, 105, 107, 163
Swing Arm 109, 168
Switch
  Brake Light 19, 102, 188
  Dimmer 186
  Headlight 186
  Ignition 100, 186
  Neutral Indicator 56, 141
  Oil Pressure Indicator 102, 147

Tachometer 98, 191
Tachometer Cable 97
Tail/Brake Light 102
Throttle Cable 13, 95
Timing Advancer 52, 180
Tire 93, 150
Torque and Locking Agent 201
Transmission 61, 140, 217
Troubleshooting Guide 205
Turn Signal 100, 190

Valve 41, 122
Valve Clearance 12, 199
Valve Installed Height Procedure Table 200

Wheel
  Front 79, 150
  Rear 87, 150
Wheel Balance 20
Wheel Bearing 154
Wheel Coupling 88, 155
Wiring Diagram 213, 223

MODEL APPLICATION

Year	Model	Beginning Frame No.	Remarks
1976	KZ750-B1	KZ750B-000001~	
1977	KZ750-B2	KZ750B-016101~	Starter lockout switch added.
1978	KZ750-B3	KZ750-B-025701~	Front brake caliper position changed. Dynamo and regulator changed. Needle bearings are used in swing arm pivot.
1979	KZ750-B4 other than US	KZ750B-033101~	Logotype and color changed.

KAWASAKI
HEAVY INDUSTRIES, LTD.
CONSUMER PRODUCTS & COMPONENTS GROUP

Part No. 99997-744-04

Printed in Japan