SUZUKI
SUZUKI

SUZUKI

GS550

SERVICE MANUAL

99500-35003-01E
（英）

SUZUKI GS550 SERVICE MANUAL

FOREWORD

Information contained in this Manual is primarily for those whose job is to inspect, adjust and service Model GS550 motorcycles, but users experienced in do-it-yourself servicing of SUZUKI machines too will find this Manual useful as a guide.

Model GS550 manufactured to standard specifications is the main subject matter of this Manual. However, the GS550 machines distributed in your country might differ in minor respects from the standard-specification GS550 and, if they do, it is because some minor modifications (which are of no consequence in most cases as far as servicing is concerned) had to be made to comply with the statutory requirements of your country.

This Manual contains up-to-date information at the time of its issue. Latermade modifications and changes will be explained to each SUZUKI distributor in respective markets, to whom you are kindly requested to make query about updated information, if any.

SUZUKI MOTOR CORPORATION
Motorcycle Technical Service Department

Quoting, copying or otherwise using any part of this manual without explicit authorization from Suzuki Motor Corporation is not permitted.

VIEW OF SUZUKI GS550

Left Side

Right Side

GROUP INDEX

No.	GROUP TITLE	PAGE
1	GENERAL INFORMATION	1~3
2	ENGINE	4~82
3	CHASSIS	83~122
4	ELECTRICAL EQUIPMENT	123~139
5	SPECIAL TOOLS	140~144
6	NECESSARY MATERIALS	145
7	TIGHTENING TORQUE	146~147
8	TROUBLE SHOOTING	148~153
9	SERVICE DATA	154~156
10	PERIODIC MAINTENANCE	157
11	WIRING DIAGRAM	158~160
12	GS550E	161~174
13	GS550L(E-03)	175~204
14	GS550L(E-28)	205~234
15	GS550T/LT(E-01)	235~312

GROUP INDEX

No.	GROUP TITLE	PAGE
16	GS550ET/LT(E-03)	313～389
17	GS500EX/LX/MX, GS550EX/TX/LX/MX(E-01)	391～501
18	GS550EX/TX/LX(E-28)	503～553
19	GS550TX/LX(E-03)	555～594
20	GS550LZ(E-03)	595～641
21	GS550LZ(E-01)	643～691
22	GS550MZ(E-03,28)	693～720

GENERAL INFORMATION

GROUP 1

CONTENTS

SPECIFICATIONS 2
FUEL AND OILS 3
CYLINDER INDENTIFICATION 3

SPECIFICATIONS

DIMENSIONS AND DRY MASS

Overall length	2,175 mm (85.6 in)
Overall width	850 mm (33.5 in)
Overall height	1,155 mm (45.5 in)
Wheelbase	1,435 mm (56.5 in)
Ground clearance	150 mm (5.9 in)
Dry mass	196 kg (432 lbs)

ENGINE

Type	Four-stroke cycle, air-cooled, DOHC
Number of cylinders	4
Bore	56.0 mm (2.205 in)
Stroke	55.8 mm (2.197 in)
Piston displacement	549cm³ (33.5 cu. in)
Compression ratio	8.6 : 1
Carburetor	MIKUNI VM22SS, four
Air cleaner	Polyurethane foam element
Starter system	Electric and kick
Lubrication system	Wet sump

TRANSMISSION

Clutch	Wet multi-plate type
Transmission	6-speed constant mesh
Gearshift pattern	1-down 5-up
Primary reduction	1.978 (93/47)
Final reduction	3.333 (50/15)
Gear ratios, Low	2.666 (32/12)
2nd	1.777 (32/18)
3rd	1.380 (29/21)
4th	1.173 (27/23)
5th	1.045 (23/22)
Top	0.956 (22/23)
Drive chain	DAIDO D.I.D.50 HDL or TAKASAGO RK50 SHO, 110 links

CHASSIS

Front suspension	Telescopic, oil dampened
Rear suspension	Swinging arm, oil dampened, spring 5-way adjustable
Steering angle	40° (right & left)
Caster	61°
Trail	120 mm (4.72 in)
Turning radius	2.6 m (8.5 ft)
Front brake	Disc brake
Rear brake	Internal expanding
Front tire size	3.25 H 19-4PR
Rear tire size	3.75 H 18-4PR
Front tire pressure	1.75 kg/cm² (25 psi) Normal solo riding
Rear tire pressure	2.0 kg/cm² (28 psi) Normal solo riding

ELECTRICAL

Ignition type	Battery ignition
Ignition timing	17° BTDC below 1,500 rpm and 37° BTDC above 2,500 rpm
Spark plug	NGK B8ES or NIPPON DENSO W24ES
Battery	12V 10Ah/10 Hours
Generator	Three-phase A.C. generator
Fuse	15A

CAPACITIES

Fuel tank including reserve	17 L (4.5/3.7 US/Imp gal)
reserve	2.0 L (2.1/1.8 US/Imp qt)
Engine oil	2.4 L (2.5/2.1 US/Imp qt)
Front fork oil	165 ml (5.58/5.81 US/Imp oz)

* *Specifications are subject to change without notice.*
* *Your motorcycle might differ in minor respects from the contents in this manual. This is because some minor modifications had to be made in the motorcycle to comply with statutory requirements of your country.*

FUEL AND OILS

Be sure to use the specified fuel and oils. The following are the specifications:

FUEL

Gasoline used should be graded 90 octane or higher in Research Method, preferably unleaded or lowlead.

(FOR U.S.A.)

Use only unleaded or low-lead type gasoline of at least 85 – 95 pump octane ($\frac{R+M}{2}$ method) or 89 octane or higher rated by the research method.

(FOR Canada)

Unleaded or low-lead type gasoline is recommended. The gasoline should be at least 85 – 95 octane.

ENGINE OIL (for engine and transmission)

Be sure that the engine oil you use comes under API classification of SE or SF and that its viscosity rating is SAE 10W/40 (for the General, all temperatures).

If the SAE 10W/40 motor oil is not available, select the oil viscosity according to following chart:

(FOR U.S.A. and Canada)

Use only oils which are rated SF under the API classification system. The viscosity rating should be SAE 10W/40. If the SAE 10W/40 motor oil is not available, select an alternate according to the chart below.

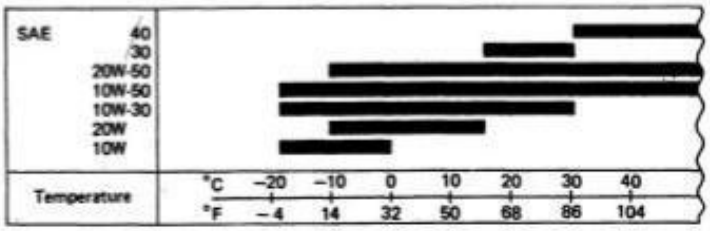

BRAKE FLUID

Specification and Classification	Remarks
DOT3 DOT4	In USA and Canada
SAEJ1703	Elsewhere

NOTE:
1. Since the brake system of this motorcycle is filled with a glycol-based brake fluid in the manufacturer, do not use or mix different types of fluid such as silicone-based and / petroleum-based fluid for refilling the system, otherwise the serious damage will be caused.
2. Do not use any brake fluid taken from old or used or unsealed containers.
3. Never re-use the brake fluid that left over from the last servicing and stored for long periods.

FRONT FORK OIL

Mixture of SAE 10W/30 motor oil and ATF (Automatic Transmission Fluid), the ratio being 50-to-50 percent.

CYLINDER IDENTIFICATION

The four cylinders of this engine are identified as No. 1, No. 2, No. 3 and No. 4 cylinder, as counted from left to right (as viewed by the rider on the seat).

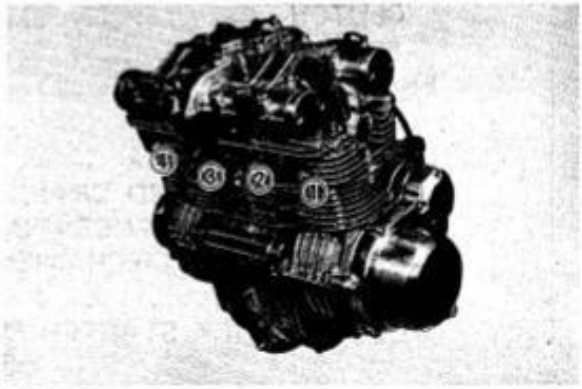

Fig. 1-1

GROUP 2

ENGINE

CONTENTS

DESCRIPTION 6
DOHC VALVE MECHANISM 6
BLOWBY GAS RECYCLING 7
ENGINE REMOVAL AND DISMANTLING 7
ENGINE COMPONENTS REMOVABLE FROM THE ENGINE IN PLACE 7
ENGINE REMOVAL 8
ENGINE DISASSEMBLY 10
DISASSEMBLING ENGINE COMPONENTS 15
Cylinder head disassembly 15
Carburetor disassembly 17
INSPECTION AND SERVICING 18
AIR CLEANER 19
CARBURETOR 19
CAMSHAFT 22
CAMCHAIN TENSIONER ADJUSTER 23
CYLINDER HEAD 23
VALVE 23
VALVE SEAT 25
VALVE SPRING 27
CYLINDER 28
PISTON AND PISTON RING 29
CRANKSHAFT 30
OIL SUMP STRAINER 31
OIL FILTER 32
OIL PUMP 32
CLUTCH 33
TRANSMISSION 33
ENGINE REASSEMBLY 34
TRANSMISSION 34
KICK STARTER 38
CRANKSHAFT AND CRANKCASE 39
STARTER AND GENERATOR ROTOR 41
GEARSHIFTING MECHANISM 43
OIL PUMP 45
CLUTCH, KICK STARTER SPRING AND ADVANCE GOVERNER 46

PISTON 49
PISTON RING 49
CYLINDER BLOCK 50
CYLINDER HEAD 52
CAMSHAFT 55
VALVE TIMING ADJUSTMENT 56
CAMCHAIN TENSIONER ADJUSTER 59
CYLINDER HEAD COVER 62
TACHOMETER DRIVE GEAR 62
CARBURETORS 63
ENGINE REMOUNTING 65
ENGINE TUNE UP 68
ENGINE OIL FILLING 68
THROTTLE WIRE ADJUSTMENT 68
CLUTCH WIRE ADJUSTMENT 68
IGNITION TIMING ADJUSTMENT 69
CARBURETOR ADJUSTMENT 72
TAPPET CLEARANCE ADJUSTMENT 75
COMPRESSION PRESSURE TEST 80
OIL PUMP PRESSURE TEST 81

DESCRIPTION

DOHC (Double-Overhead-Camshaft) Valve Mechanism

In the DOHC engine, two camshafts are mounted on the cylinder head, one for intake valves and one for exhaust valves. Those pushrods and rocker arms commonly found in conventional OHV or SOHC engines are absent in this engine: specifically, the cams are in direct contact with valve tappets to operate the valves through a shorter path of actuating drive.

This design assures the high responsiveness of valve in high-speed operation to account for the unmatched performance of the GS550 and provides an easy-to-maintenance valve mechanism.

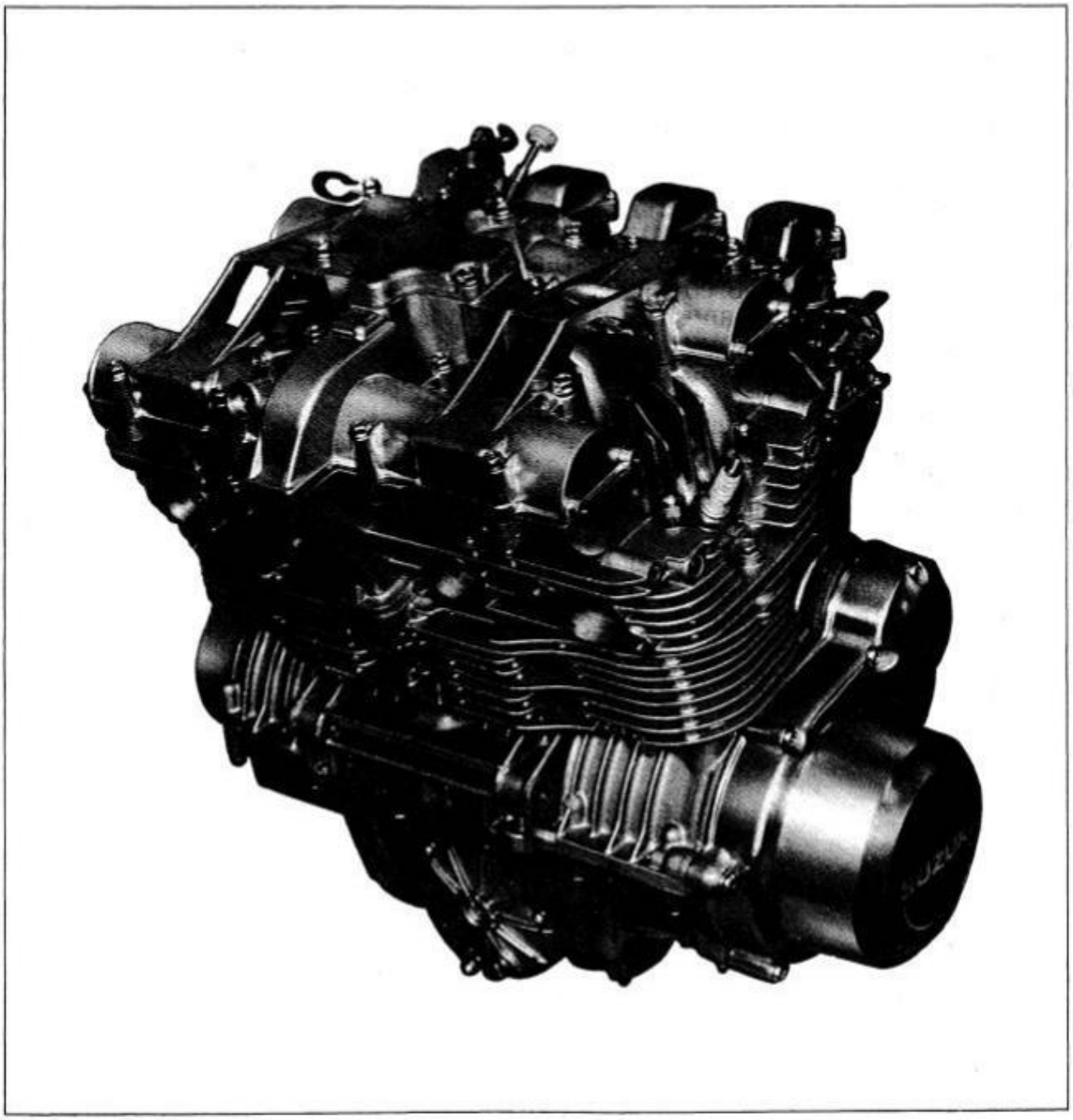

Fig. 2-1

BLOWBY GAS RECYCLING

Blowby gases in the crank case are constantly drawn into the chain chamber provided in the middle section of the cylinder block. The top section of this chamber is communicated to the air cleaner assembly through a rubber tube. In the cleaner, the gases merge with incoming air and thus are recycled to the engine through the normal intake system, namely, the air cleaner element and the gang of carburetors.

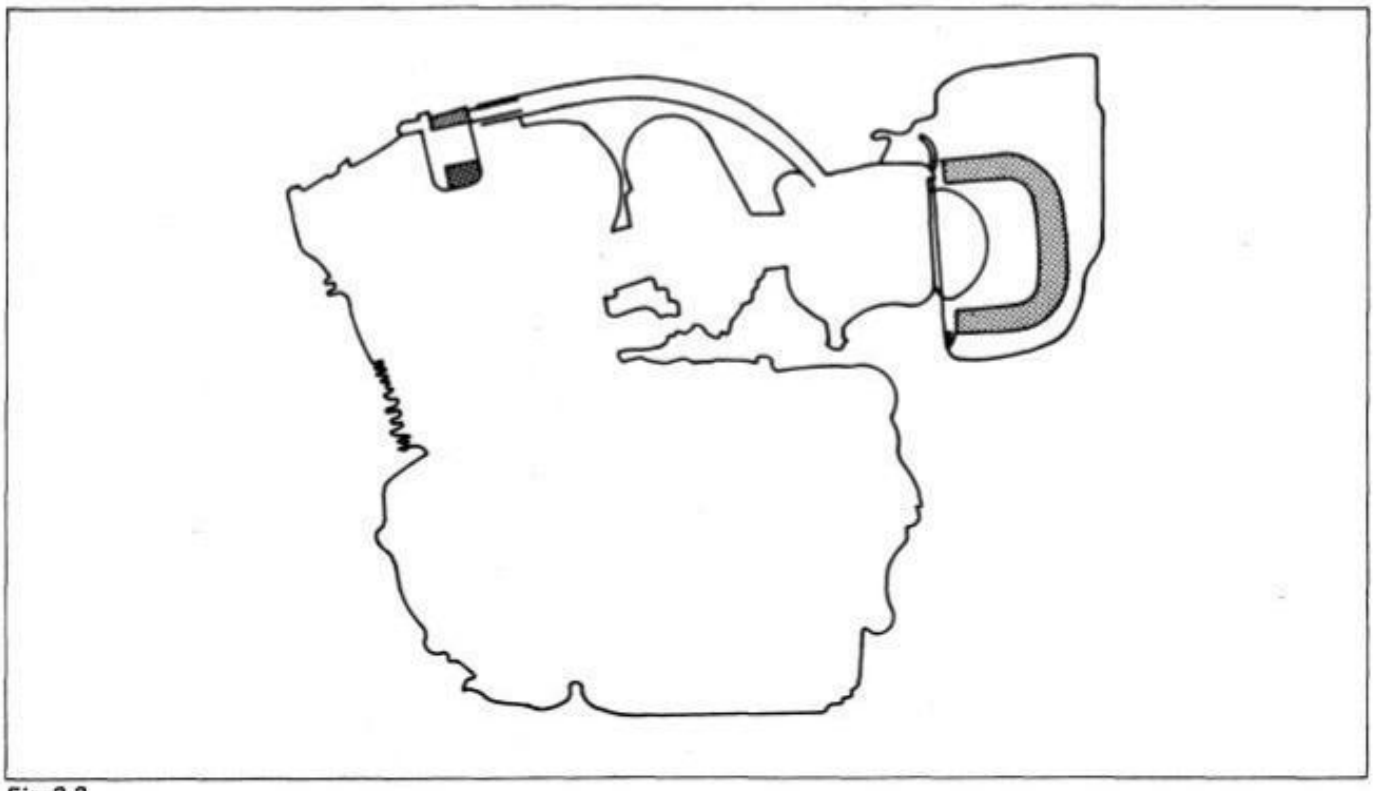

Fig. 2-2

ENGINE REMOVAL AND DISMANTLING

ENGINE COMPONENTS REMOVABLE FROM THE ENGINE IN PLACE

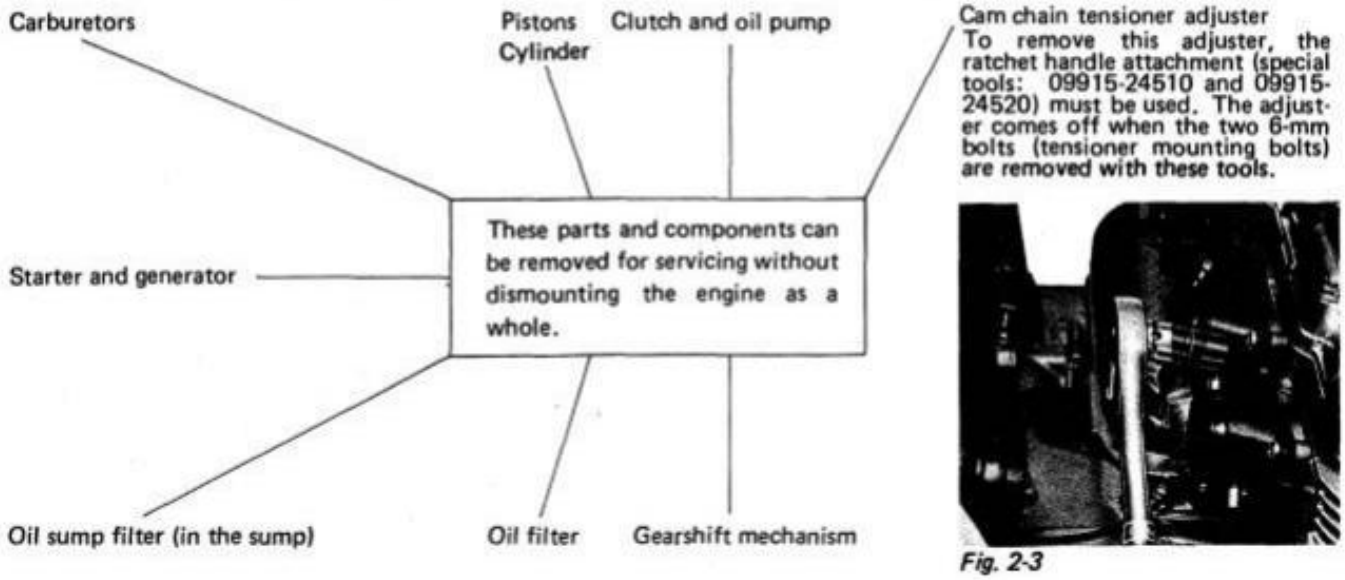

Fig. 2-3

ENGINE REMOVAL

1. Drain out engine oil.
   ①: Drain plug

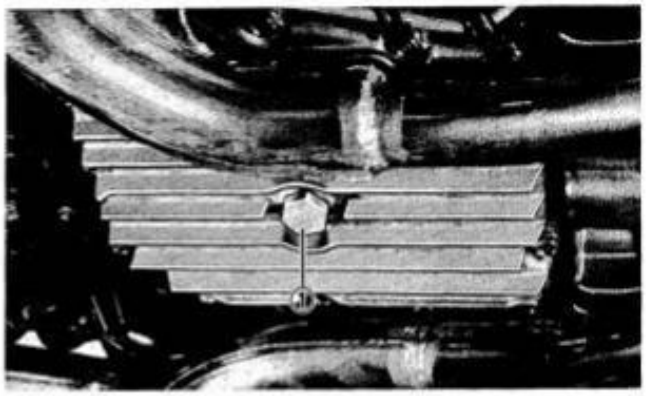

Fig. 2-4

2. Remove fuel tank.

NOTE: Leave fuel cock lever in "ON" or "RES" position.

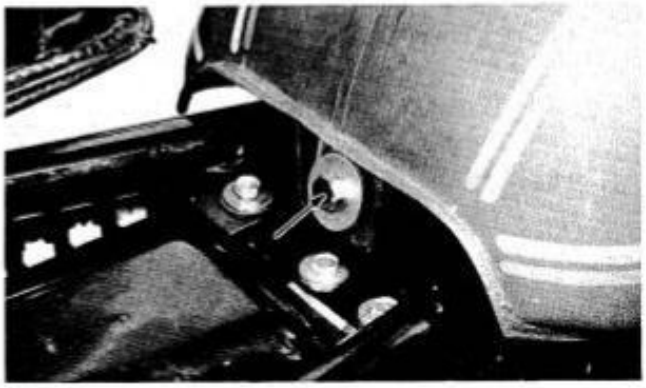

Fig. 2-5

3. Disconnect lead wires and high-tension cords.
   ①: Battery (–) terminal
   ②: Starter relay (–) terminal
   ③: Generator lead wire
   ④: Contact-point lead wire

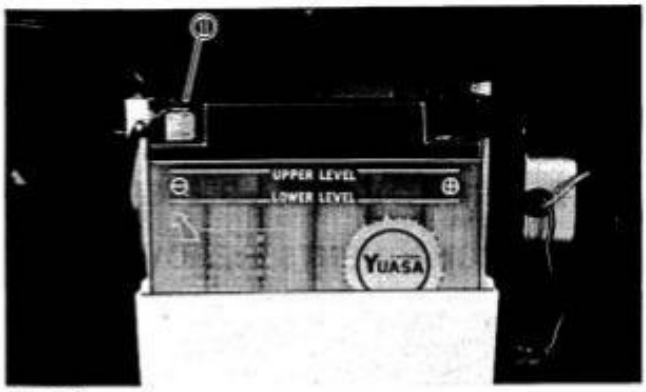

Fig. 2-6

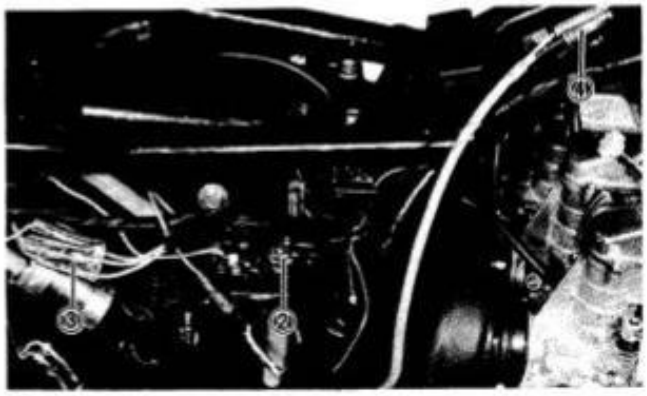

Fig. 2-7

4. Remove three air cleaner mounting bolts to free the air cleaner in place.

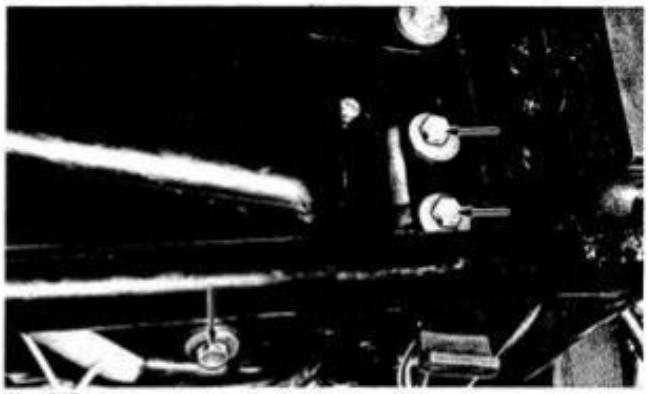

Fig. 2-8

5. Remove carburetors.

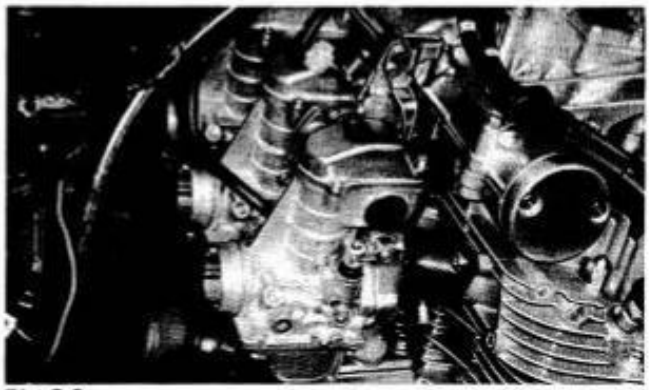

Fig. 2-9

6. Disconnect exhaust pipes and tachometer drive cable.

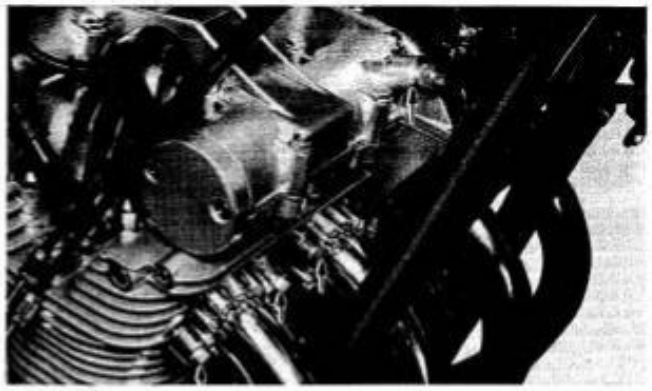

Fig. 2-10

7. Remove gear shift lever, left step and sprocket cover.

Fig. 2-11

8. Remove engine sprocket.
9. Disconnect lead wire of gear positioning switch.
10. Remove right step and rear brake lever.
11. Remove the engine mount bolts.

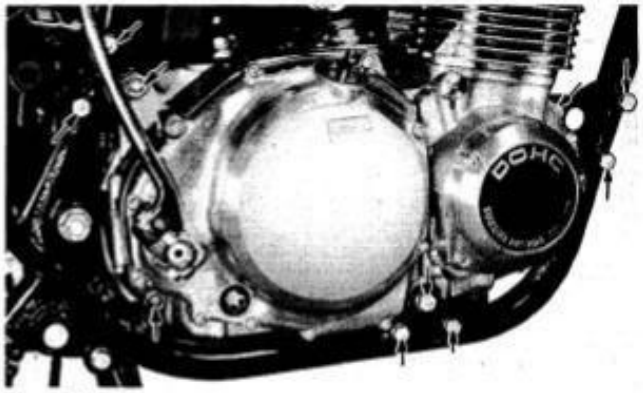

Fig. 2-12

12. The engine is now ready for removal. Use both hands, and carry it off the chassis, taking it out from the right-hand side.

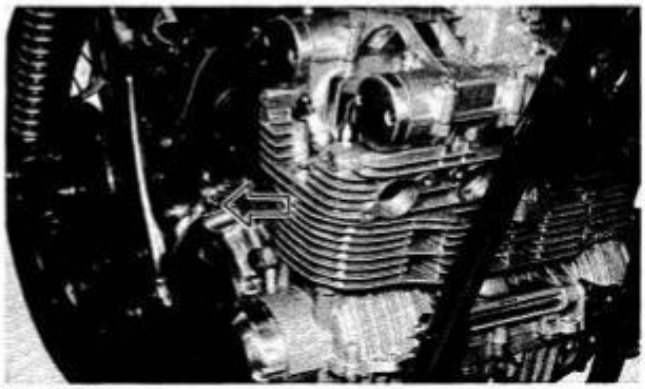
Fig. 2-13

ENGINE DISASSEMBLY

1. Remove cylinder head cover.

NOTE: Breather cover need not be removed.

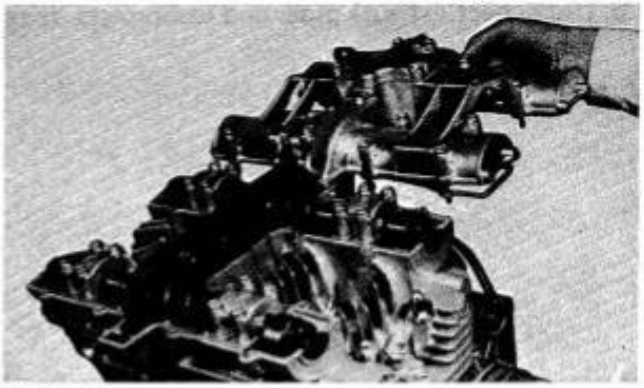
Fig. 2-14

2. Remove chain tension adjuster. This is accomplished by first loosening lock nut ① and tightening screw ② and then by removing two mounting bolts ③.

NOTE: Tightening screw ② locks the spring-loaded tensioner pushrod inside.

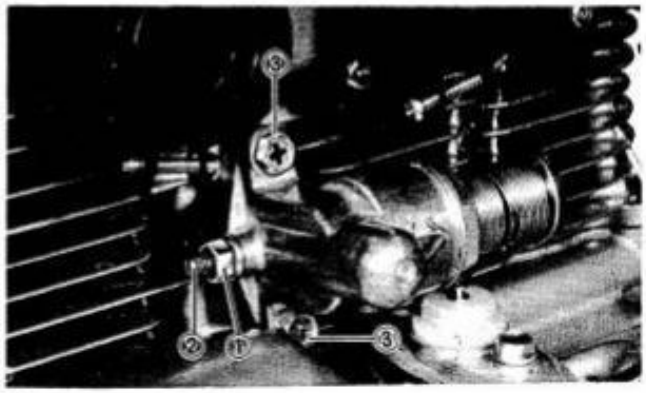

Fig. 2-15

3. Remove the two camshafts, intake and exhaust.

NOTE: 1. Be sure to loosen the four cap bolts evenly by shifting the wrench diagonally after cracking a bolt loose.

2. Hold down each camshaft with vice pliers (1), and remove the bolts securing the bearing caps, two on each camshaft. Then remove the pliers and take off the camshaft.

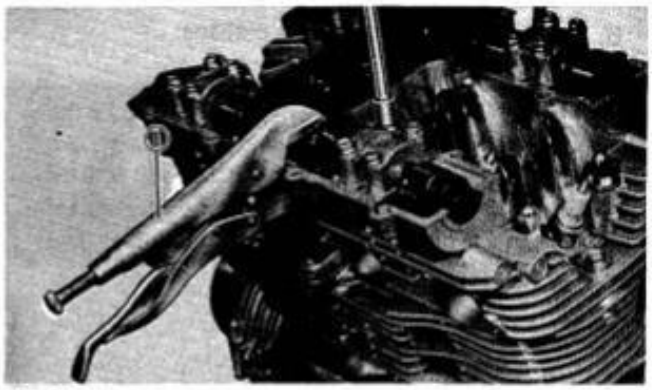

Fig. 2-16

4. Remove cylinder head

The cylinder head becomes free for removal when its three 6-mm bolts ①, one at each end, and twelve 8-mm nuts are removed.

NOTE: Be sure to use the special tool (T wrench) sized to enter the pockets formed of the head and reach the nuts down below to loosen the 8-mm nuts, and to shift the tool sequentially in the descending order of numbers assigned to these nuts in order to ease the pressure equally and evenly.

09914-24510	T handle
09911-74520	12 mm socket

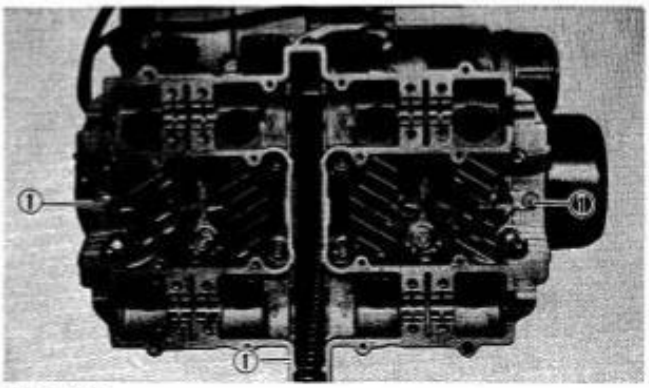

Fig. 2-17

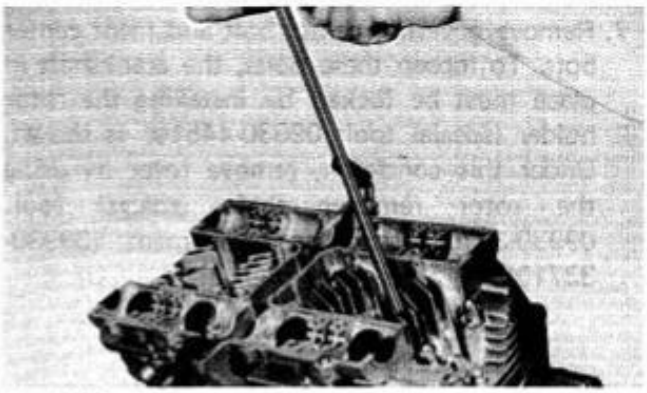

Fig. 2-18

5. Remove cylinder block.

After removing cylinder head, take a firm grip on the cylinder block at both ends, and lift it straight up. If the block will not come off, lightly tap on the non-fin portions of the block with a plastic mallet to shake the gasketed joint loose.

NOTE: Cylinder removal from crankcase is made easier by the use of the cylinder disassembling tool (special tool: 09912-34510). This tool can be used on crankcase, too.

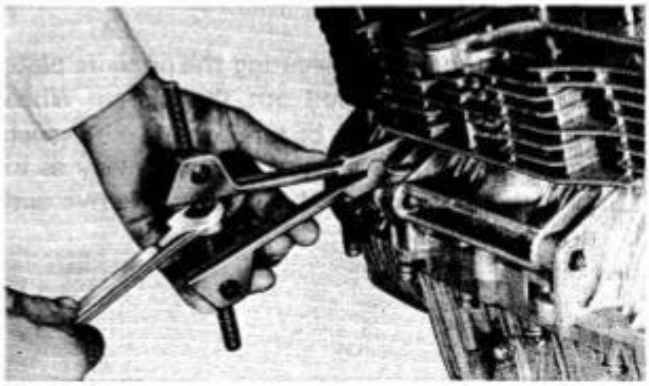

Fig. 2-19

6. Remove No. 2 and No. 3 pistons.

NOTE: Using a quick-drying wick pen, write the I.D. number on crown of each piston. Use the piston pin puller (special tool: 09910-34510) to force the pin out to disconnect the piston from its connecting rod.

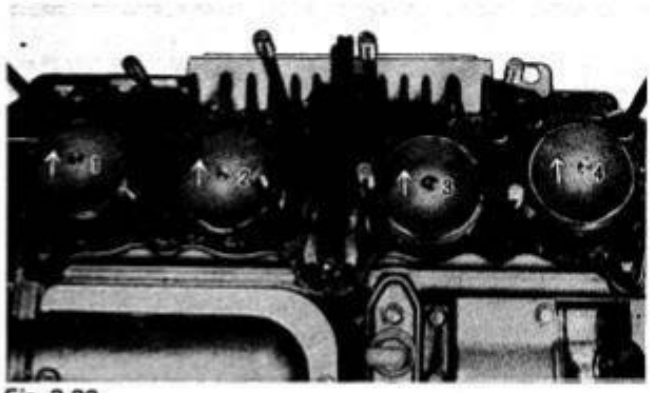

Fig. 2-20

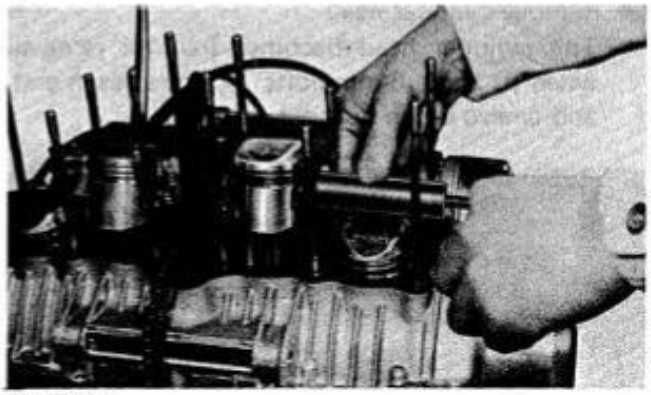

Fig. 2-21

7. Remove governor center bolt and rotor center bolt. To loosen these bolts, the crankshaft in place must be locked by installing the rotor holder (special tool: 09930-44510) as shown. Under this condition, remove rotor by using the rotor remover shaft (special tool: 09930-30101) and its attachment (09930-33710).

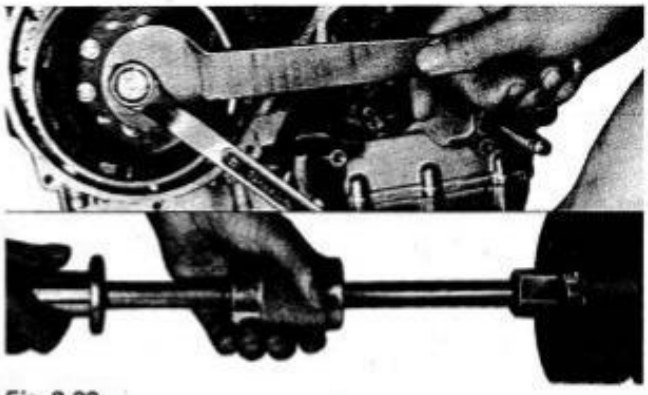

Fig. 2-22

8. Remove clutch plates.
   Remove the 6 bolts securing the pressure plate to the hub, and pull out the plate. When loosening these bolts, be sure to shift the wrench from one bolt to another in such a way as to ease the pressure evenly. Pick out drive and driven plates.

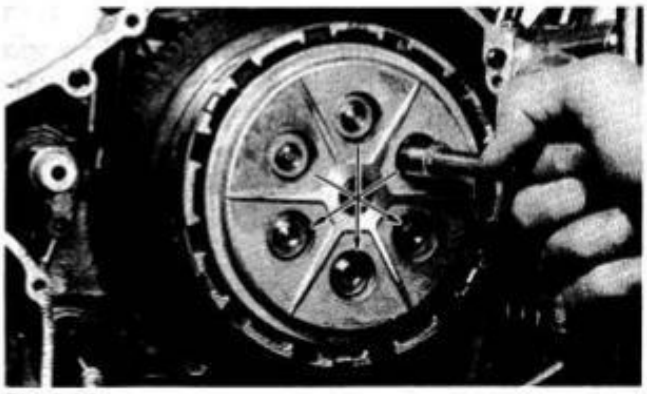

Fig. 2-23

9. Flatten the lock washer to unlock the sleeve hub nut securing the clutch hub to countershaft; remove the nut, using the clutch hub holder (special tool: 09920-53710) and a 32-mm socket wrench; and draw out the clutch hub and washer.

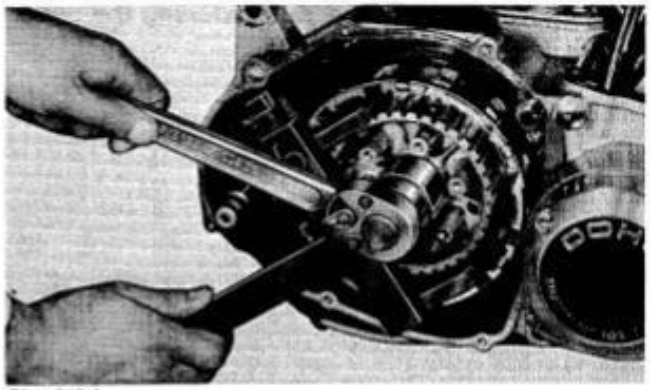

Fig. 2-24

10. Remove primary driven gear.
    Run two 6-mm bolts into the primary driven gear spacer to ease out spacer by pulling. With the spacer removed, the primary driven gear (integral with the clutch housing) is free to disengage from the primary drive gear.

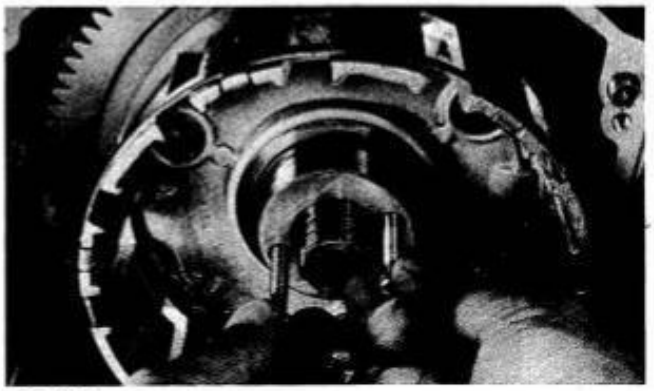

Fig. 2-25

11. Remove the bearing retainer.

Fig. 2-26

12. Remove the driveshaft oil seal retainer.

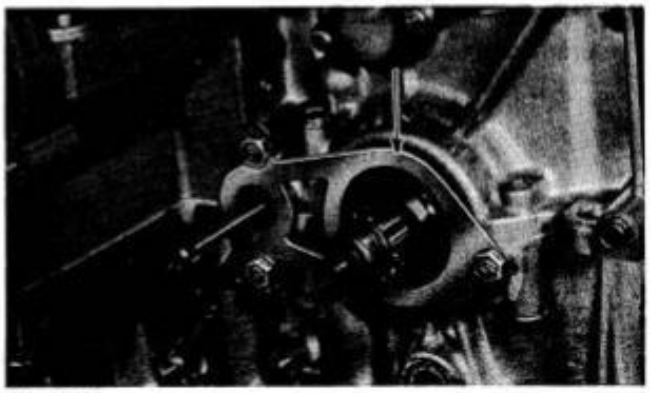

Fig. 2-27

13. Remove the bolt and nut fastening the upper crankcase to the lower half.

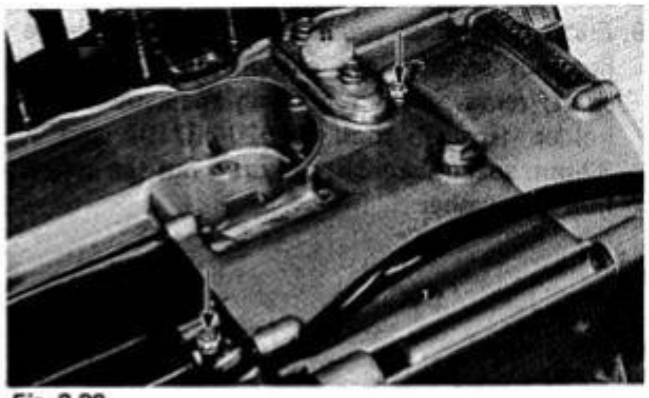

Fig. 2-28

14. Loosen thirteen 8-mm bolts to detach oil pan.

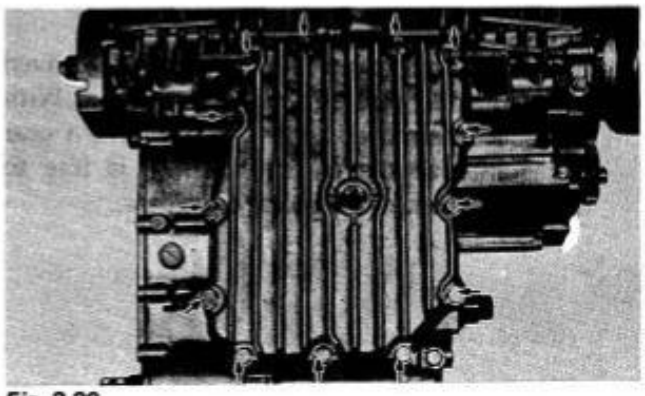

Fig. 2-29

15. Remove sixteen 6-mm bolts and thirteen 8-mm bolts securing the lower crankcase to the upper crankcase. Be sure to loosen the 8-mm bolts sequentially in the descending order of numbers given them. Separate the lower crankcase from the upper one.

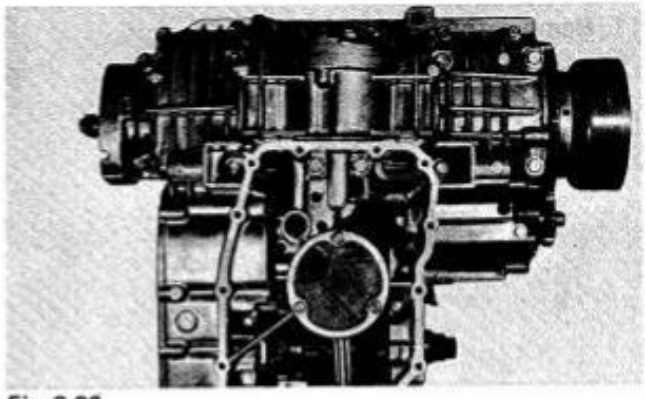

Fig. 2-30

16. Remove transmission gear assemblies and crankshaft.

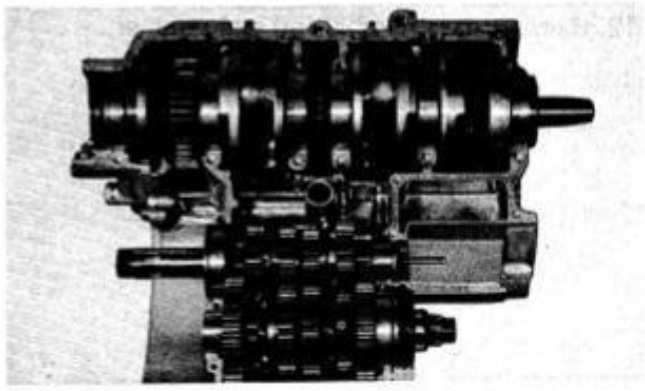

Fig. 2-31

17. Draw out the gearshift fork shaft and take out three forks.

18. Remove cam stopper spring holder ①, and take out the pin and spring. Draw out gearshift cam.

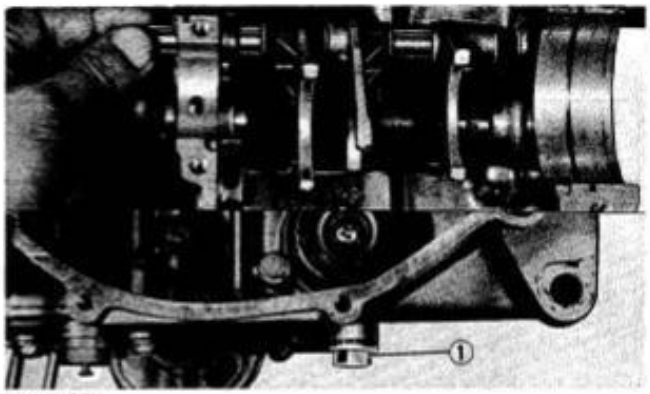

Fig. 2-32

DISASSEMBLING ENGINE COMPONENTS

CAUTION: If and when removing valve cotter, rocker arm parts, be sure to identify each removed part as to its location and keep the parts in groups, so that each will be restored to the original location during reassembly.

Cylinder head disassembly

1. Remove tappet shims, using forceps (special tool: 09916-84510) to pick each shim up.
   ① : Tappet shim

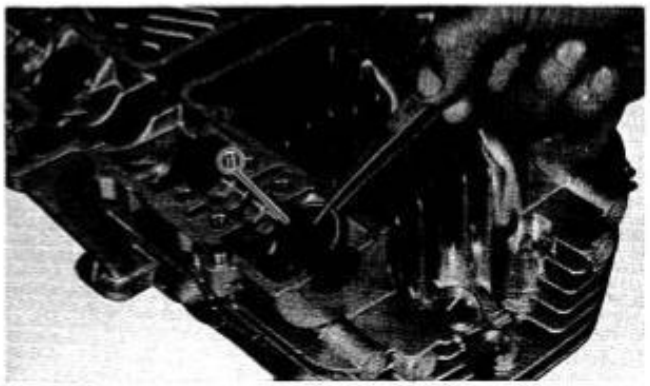

Fig. 2-33

2. Pull out tappets by picking each with fingers.

NOTE: Exercise caution in removing tappets so as not to nick them.

Fig. 2-34

3. Remove each valve in the following manner:
   1) Using the valve lifter (special tool: 09916-14510), compress the spring.

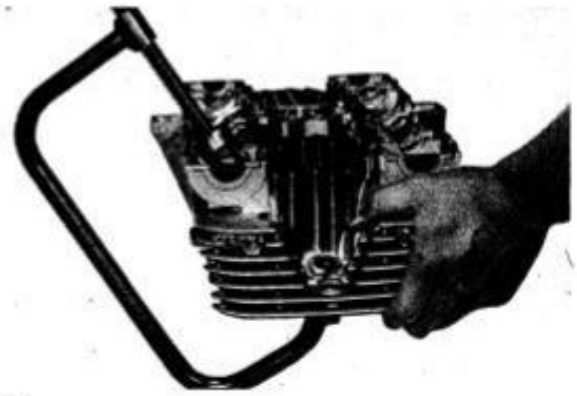
Fig. 2-35

2) Take off the two cotter halves from valve stem, using forceps.

09916-84510	Forceps

Fig. 2-36

3) Take out the valve upper seat, inner spring and outer spring.

Fig. 2-37

4) From the other side, pull out the valve.

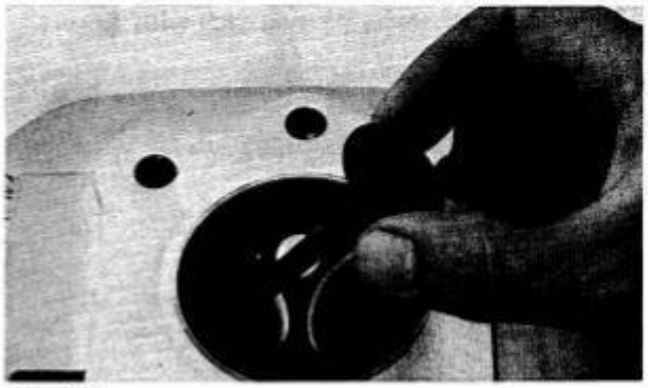

Fig. 2-38

5) Drive the valve guide out toward cylinder head side: use valve guide remover.

09916-44511	Valve guide remover

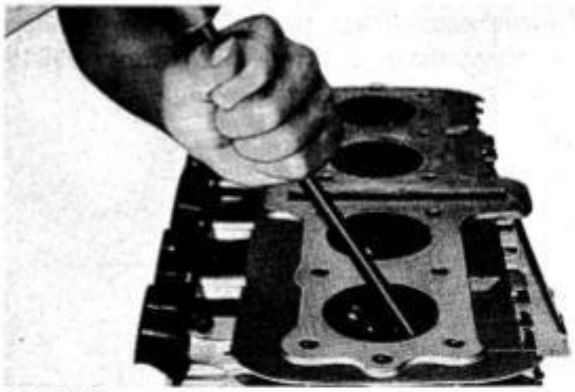

Fig. 2-39

NOTE: Discard the removed valve guide sub-assemblies.
In reassembly, use replacement sub-assemblies, each consisting of guide ring ①, oil seal ② and valve guide ③.

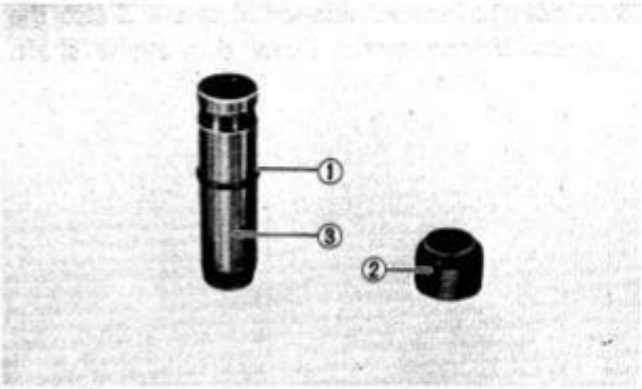

Fig. 2-40

Carburetor disassembly

1. Remove the cover from each cauburetor.
2. At the right section of the cauburetor assembly, unhook the throttle return spring from the pin.

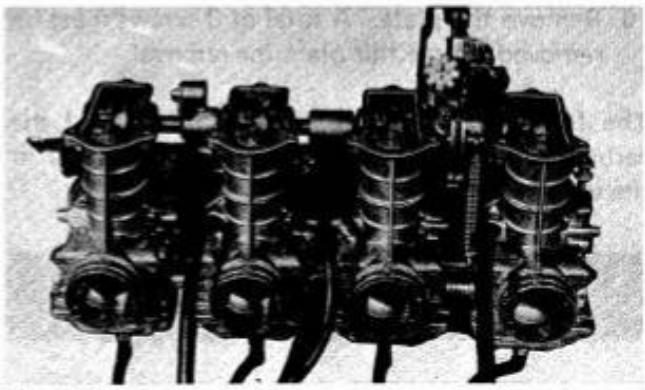
Fig. 2-41

3. Remove five bolts to free the throttle shaft.

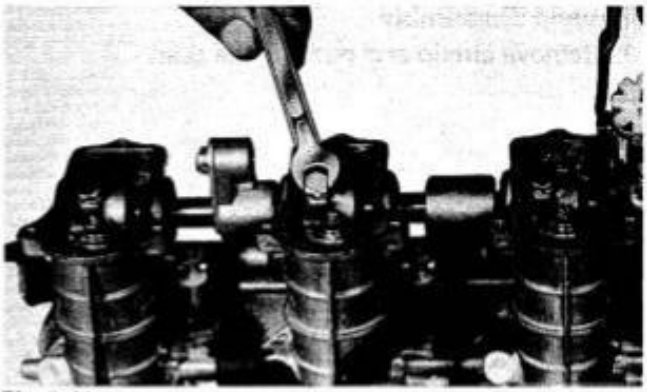
Fig. 2-42

4. Remove stopper plate and pull out the shaft.

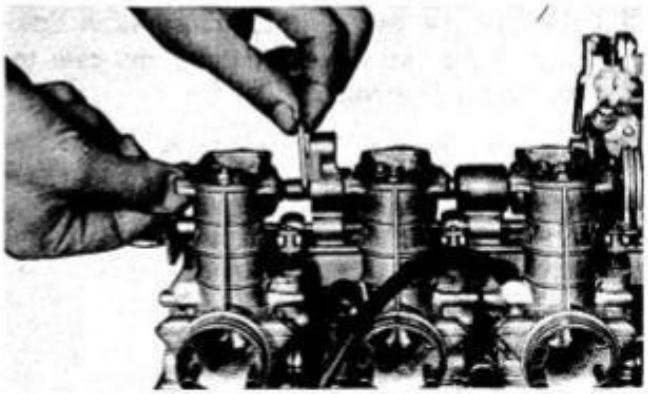
Fig. 2-43

5. Loosen four cross-recessed screws and also the screw in the slot. Draw out choke shaft.

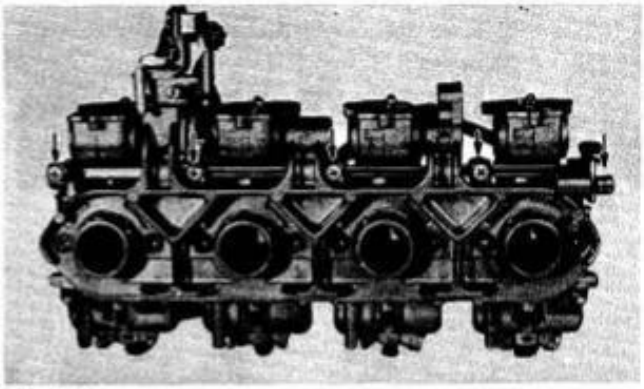

Fig. 2-44

6. Remove the plate. A total of 8 screws must be removed to free this plate for removal.

The foregoing procedure permits the rest of the carburetor assembly to be disassembled further in the usual manner.

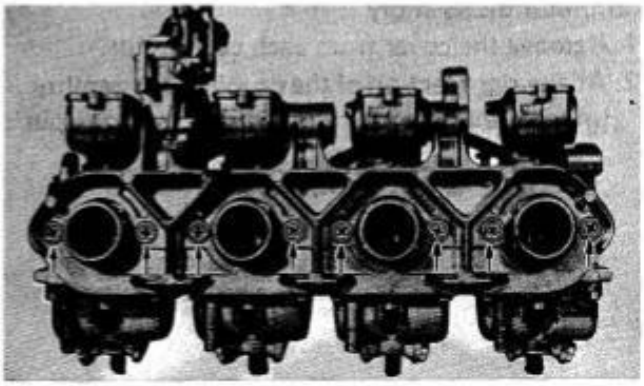

Fig. 2-45

Oil pump disassembly

1. Remove circlip and pull off the gear.

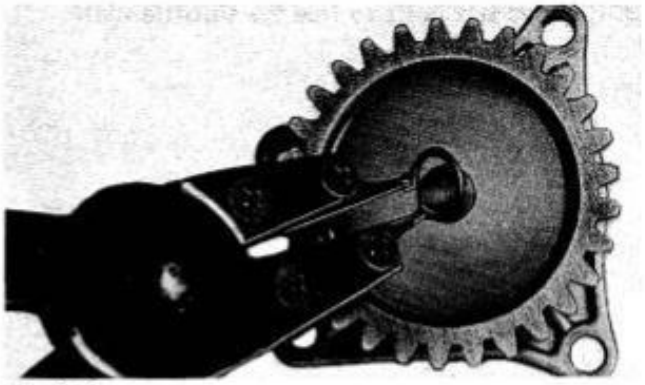

Fig. 2-46

2. Drive out the two pins to transmission side. Separate the two halves of the pump case to take out the internals.

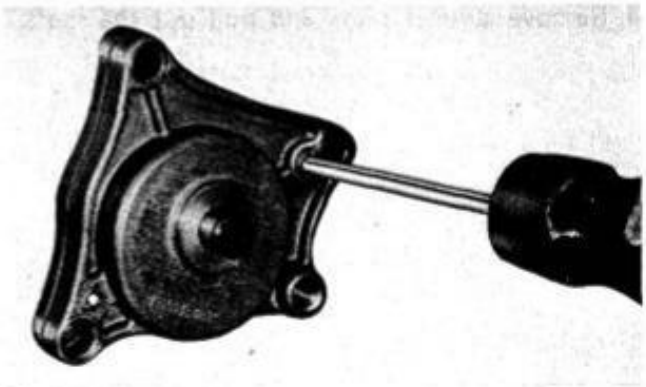

Fig. 2-47

INSPECTION AND SERVICING

AIR CLEANER

If the air cleaner is clogged with dust, intake resistance will be increased with a resultant decrease in output and an increase in fuel consumption.
Check and clean the cleaner according to the following procedures.

1. Take out the air cleaner element ① from the air cleaner case by unscrewing a screw ②.
2. Take the polyurethane filter out of the element by unscrewing 2 screws and wash it with non-flammable cleaning solvent.
3. After wringing cleaning solvent out of the filter, soak it into MOTOR OIL.
4. Wring oil out of the filter and then fit it to the element.

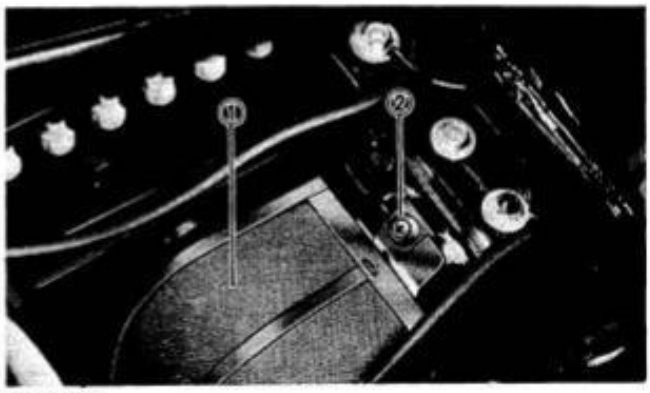

Fig. 2-48

CAUTION: Do not wring the element to squeeze off cleaning solvent or oil.

Fig. 2-49 *CORRECT*

Fig. 2-50 *INCORRECT*

CARBURETOR

Carburetor jetting specification

Type	Main Jet	Air Jet	Needle Jet	Jet Needle	Pilot Jet No. 1	Pilot Jet No. 2	Cutaway	Air screw
VM22SS	# 80	1.4	0 - 6	5DL35-3	# 15	# 50	1.5	2.0 turns back

Carburetor cleaning

Clean and inspect the cauburetors by referring to the circuit diagram:

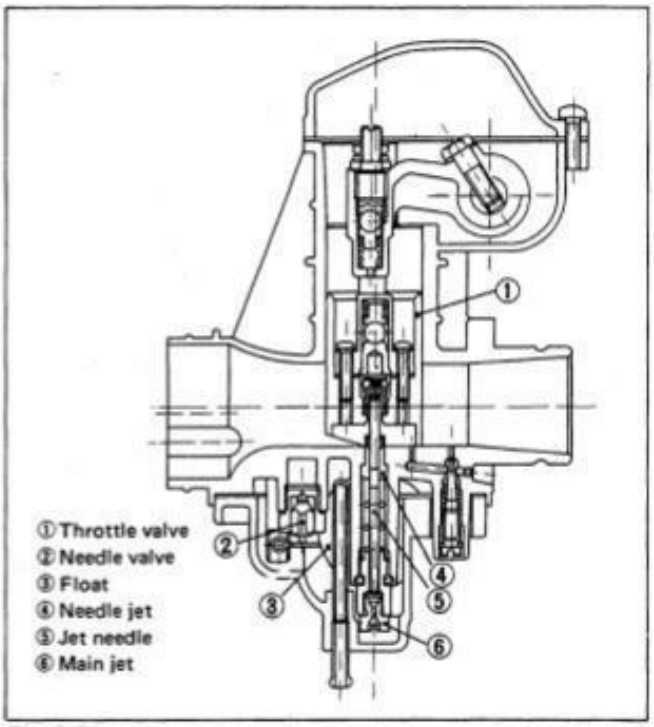

Fig. 2-51

NOTE: Do not disturb the screw shown in the photo.

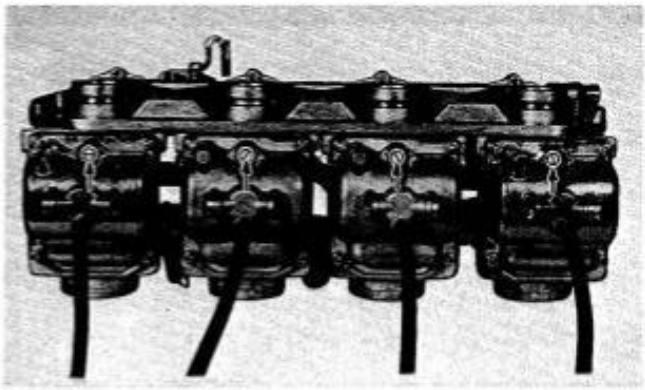

Fig. 2-52

Checking fuel level in each float chamber

1. Leave fuel cock lever in "ON" or "RES" position.
2. Place machine on center stand.
3. Remove float chamber screw and install the fuel level gauge (special tool: 09913-14511).
4. Move fuel cock lever to "PRI" position to admit fuel into float chamber.
5. With the float chamber filled with fuel, turn the cock lever back to "ON" position, and start up the engine.

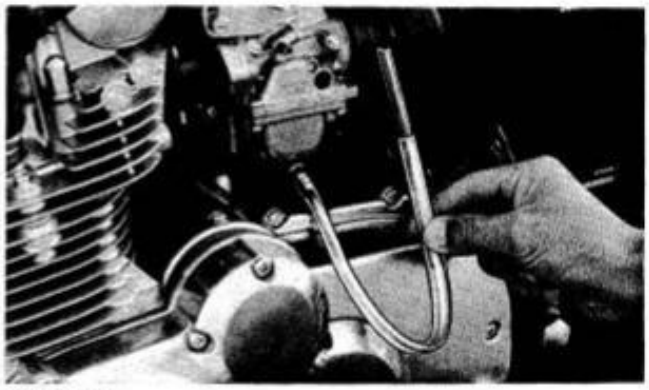

Fig. 2-53

6. Run the engine at the idling speed (1,000 – 1,100 rpm), and measure the distance Ⓐ, with the middle line of the level gauge aligned with the lower surface of carburetor body as shown in photo. Ⓐ should be within the range specified here.

Distance Ⓐ	3.0 - 4.0 mm (0.12 - 0.16 in)

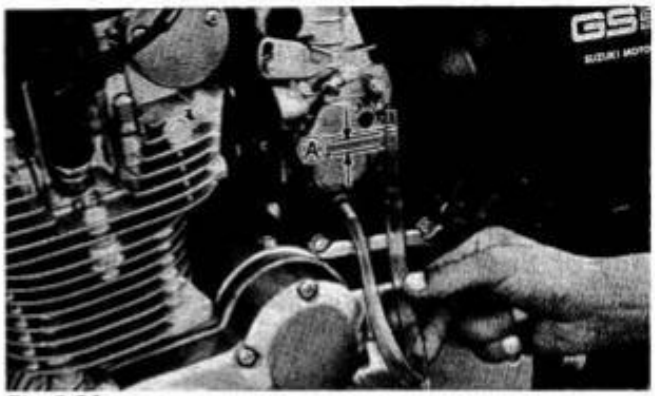

Fig. 2-54

NOTE: When refitting the screw, be sure to use the "O" ring.

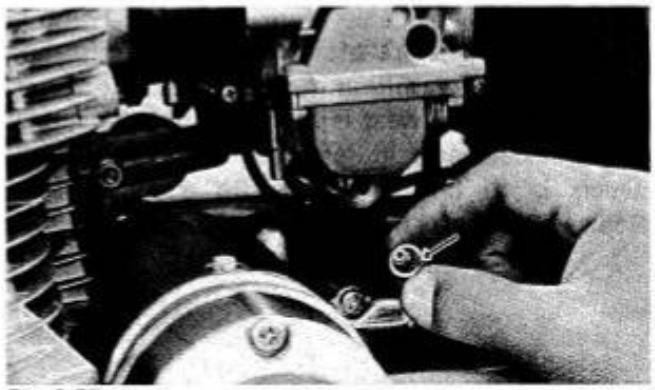
Fig. 2-55

Fuel level adjustment

If the distance Ⓐ measured is not within the specified range, it means that the float height Ⓗ is off the specification. To adjust this height, proceed as follows:

Remove float bowl, and bend the float arm to increase or decrease the height to this value:

Float height Ⓗ	26 mm (1.02 in)

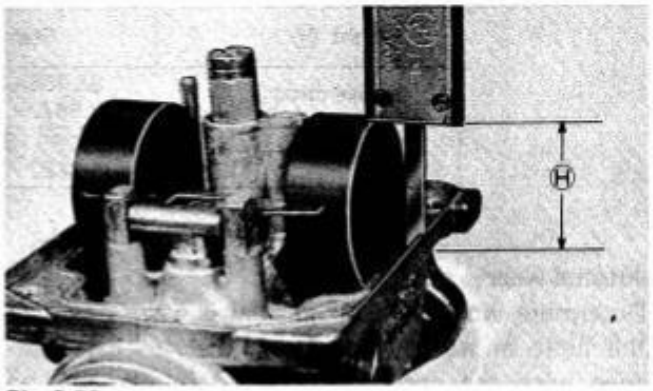

Fig. 2-56

IMPORTANT: Be sure to have the gasket removed before measuring the height.

Bending the arm upward Ⓐ raises the level; being it downward Ⓑ lowers the level (in the inverted condition of the cauburetor).

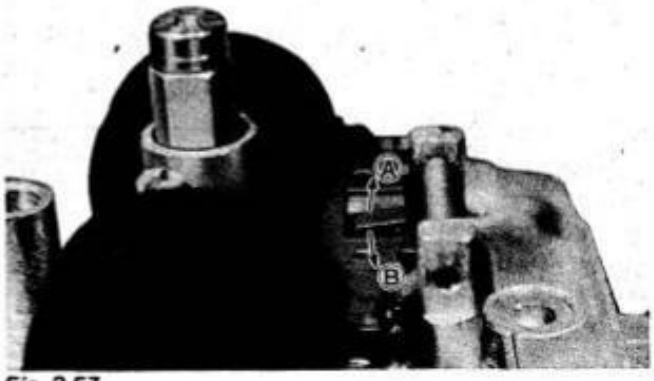

Fig. 2-57

CAMSHAFT

One camshaft is meant for intake valves and the other for exhaust valves. Be sure to discriminate the two. The camshafts should be checked for deflection and also for the wear of cams and journals if the engine has been noted to give abnormal noise or vibration or to lack output power. Any of these malconditions could be caused by camshafts worn down or distorted to the service limit.

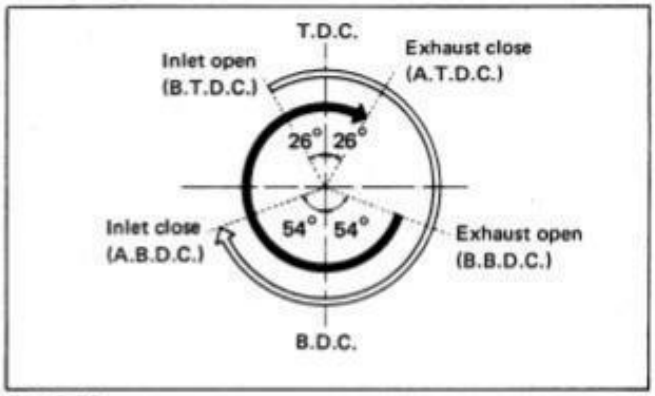

Fig. 2-58

Cam wear

Worn-down cams are often the cause of mistimed valve operation resulting in reduced output power. The limit of cam wear is specified for both intake and exhaust cams in terms of cam height Ⓗ, which is to be measured with a micrometer. Replace camshafts if found worn down to the limit.

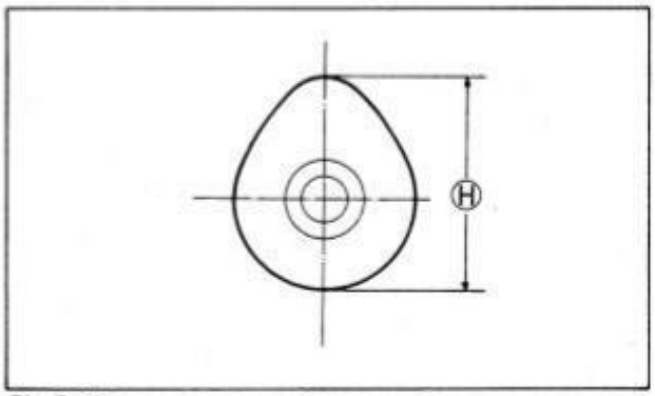

Fig. 2-59

Cam height specification

Height Ⓗ	Standard	Service limit
Intake cams	35.485 - 35.515 mm (1.3970 - 1.3982 in)	35.190 mm (1.3854 in)
Exhaust cams	35.285 - 35.315 mm (1.3892 - 1.3904 in)	34.990 mm (1.3776 in)

Journal wear

Determine whether each journal is worn down to the limit or not by measuring the running clearance with the camshaft installed in place. Use plastigage to read the clearance, which is specified as follows:

Clearance specification (for both camshafts)

Standard	Service limit
0.020 - 0.054 mm (0.0008 - 0.0021 in)	0.15 mm (0.0059 in)

Be sure to have each camshaft fastened down in place by its bearing caps. Have the cap bolts tightened to this torque value:

Cap bolt torque	0.8 - 1.2 kg-m (6.0 - 8.5 lb-ft)

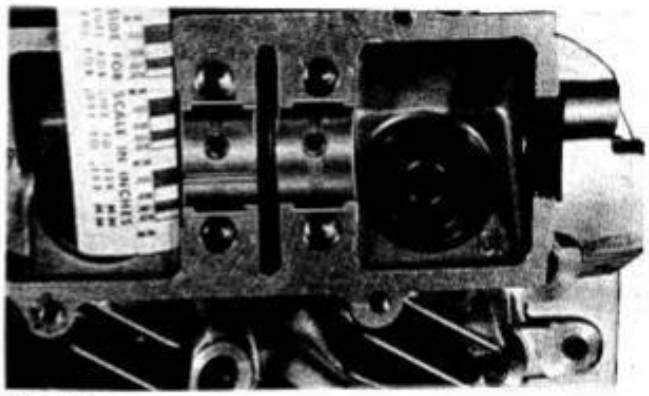

Fig. 2-60

Camshaft runout

Measure the runout with a dial gauge. Replace the camshaft if the runout reading exceeds the limit.

Runout specification

Standard	Service limit
0.03 mm (0.001 in)	0.1 mm (0.004 in)

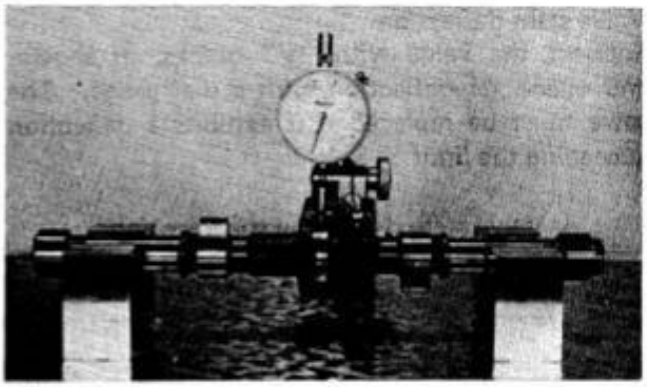

Fig. 2-61

CAMCHAIN TENSIONER ADJUSTER

Move the pushrod back and forth with fingers to see if it moves smoothly as it should. If the pushrod sticks or otherwise moves erratically, replace it.

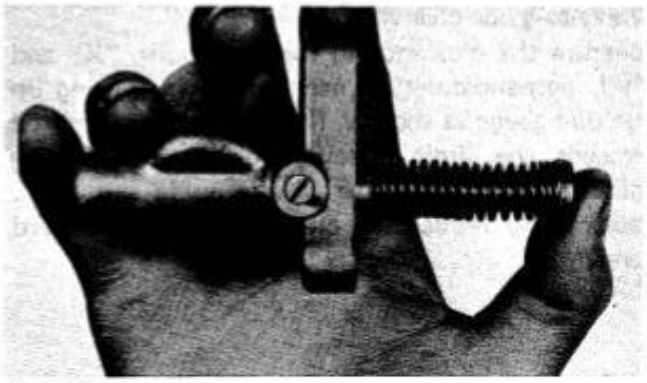

Fig. 2-62

CYLINDER HEAD

1. Decarbon combustion chambers.
2. Check the gasketed surface of the cylinder head for distortion with a straightedge and feeler gauge, taking a clearance reading at several places indicated. If the largest reading at any position of the straightedge exceeds the limit, replace the cylinder head.

Cylinder head distortion specification

Standard	Service limit
0.03 mm (0.0012 in)	0.2 mm (0.008 in)

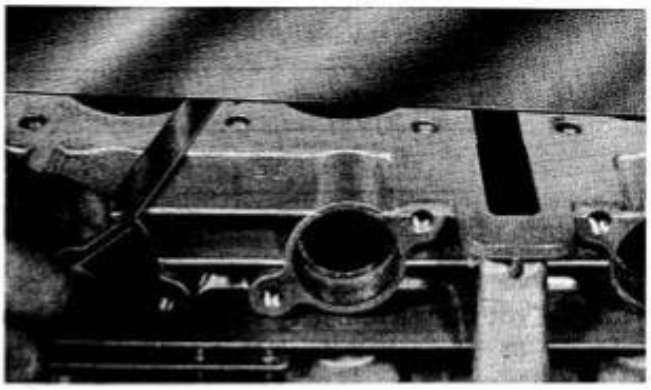

Fig. 2-63

VALVE

Valve face wear

Visually inspect each valve for wear of its seating face. Replace valve if found with an abnormally worn face.

The thickness Ⓣ decreases as the wear of the face advances. Measure the thickness and, if the thickness is found to have decreased to the limit, replace it.

Valve thickness specification

Standard	Service limit
1.0 - 1.4 mm (0.04 - 0.06 in)	0.5 mm (0.02 in)

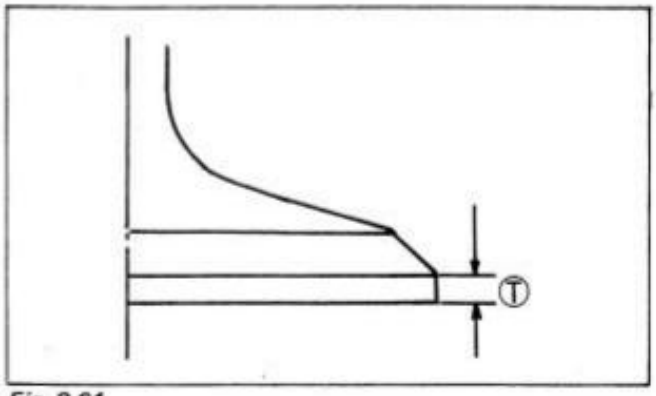

Fig. 2-64

Valve stem deflection

Support the valve with "V" blocks, as shown, and check its deflection with a dial gauge. The valve must be replaced if it exhibits a deflection exceeding the limit.

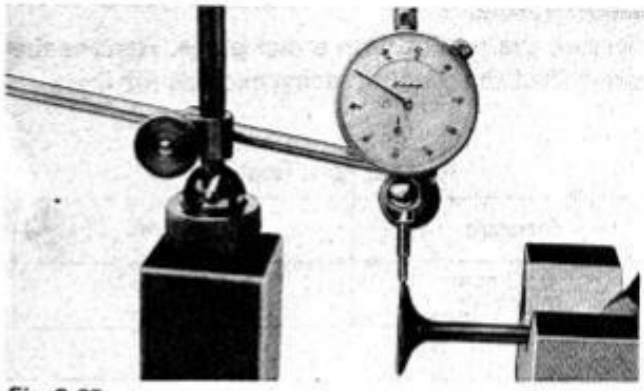

Fig. 2-65

Valve stem deflection specification

Service limit
0.05 mm (0.002 in)

Valve-to-guide clearance

Measure the clearance in two directions, "X" and "Y", perpendicular to each other, by rigging up the dial gauge as shown. If the clearance measured exceeds the limit, specified below, then determine whether the valve or the guide should be replaced to reduce the clearance to the standard range:

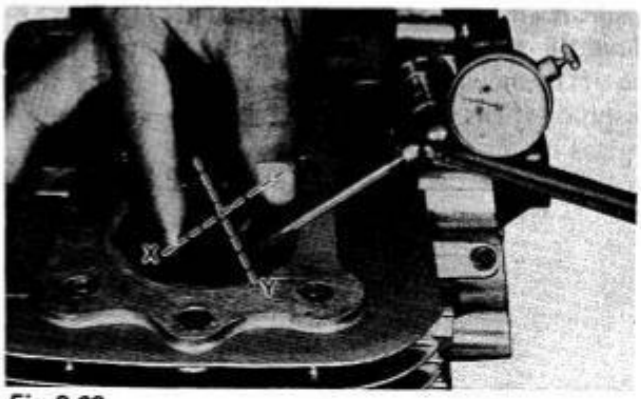

Fig. 2-66

Valve-to-guide clearance specification

Valve	Standard	Service limit
Intake valves	0.025 - 0.055 mm (0.0009 - 0.0022 in)	0.35 mm (0.014 in)
Exhaust valves	0.040 - 0.070 mm (0.0016 - 0.0028 in)	0.35 mm (0.014 in)

If the valve stem is worn down to the limit, as measured with a micrometer, where the clearance is found to be in excess of the limit indicated above, replace the valve; if the stem is within the limit, then replace the guide. After replacing valve or guide, be sure to recheck the clearance.

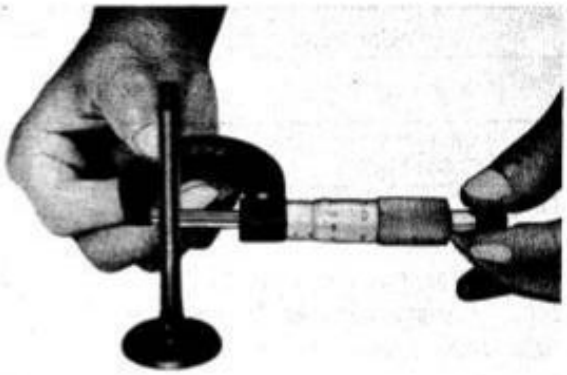

Fig. 2-67

Valve stem diameter specification

Valve	Standard	Service limit
Intake valves	6.965 - 6.980 mm (0.2742 -0.2748 in)	6.900 mm (0.2716 in)
Exhaust valves	6.955 -6.970 mm (0.2738 -0.2744 in)	6.805 mm (0.2679 in)

VALVE SEATS

IMPORTANT: Before checking the seats for seat width and, as necessary, refacing the seats, make sure the valves and valve guides are in good condition.

Seat width measurement

Coat the valve seat with a paste of red lead or Prussian blue uniformly. Fit the valve and tap the coated seat with the valve face in a rotating manner, in order to get a clear impression of the seating contact. In this operation, use the valve lapper to hold the valve head.

The ring-like red lead impression left on the valve face must be continuous – without any break – and, in addition to this requirement, the width of the red-lead ring, which is the visualized seat "width", must be within the limit:

Valve seat width specification

Seat width	Standard	Wear limit
Ⓦ	1.0 - 1.2 mm (0.04 - 0.05 in)	1.5 mm (0.06 in)

If either requirement is not met, correct the seat by servicing it as follows:

Valve seat servicing

The valve seats for both intake and exhaust valves are angled to present three bevels, 15° (inner), 45° (middle) and 75° (outer). To reface the seat, proceed as follows:

09916-24900	Valve seat cutter set
99103-45011	Valve seat cutter set (only for U.S.A.)

NOTE: The valve seat contact area must be inspected after each cut.

1. Insert with a slight rotation, the solid pilot that gives a snug fit. The shoulder on the pilot should be about 10 mm (0.39 in) from the valve guide.
2. Using the 45° cutter No. 635, descale and cleanup the seat with one or two turns.
3. Inspect the seat by the previous seat width measurement procedure. If the seat is pitted or burned, additional seat conditioning with the 45° cutter is required.

Fig. 2-68

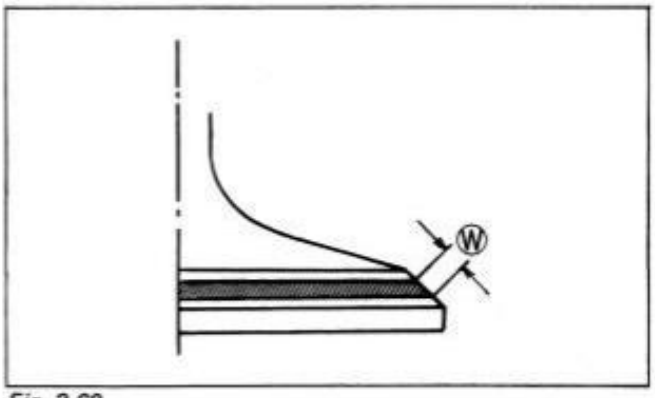

Fig. 2-69

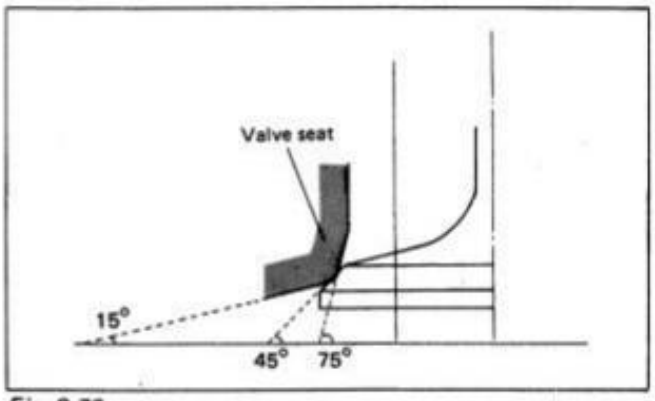

Fig. 2-70

NOTE: Cut the minimum amount necessary from the seat to prevent the possibility of the valve stem becoming too close to the tappet for correct valve contact angle.

If the contact area is too low, use 15° cutter No. 216 to raise and narrow the contact area. If the contact area is too high, use 15° cutter No. 635 to lower and narrow the contact area. After cutting the 75° and 15° angles, it is possible that the valve seat (45°) is too narrow. If so, re-cut the seat to the correct width.

4. After the desired seat position and width is achieved, use the 45° cutter very lightly to clean up any burrs caused by the previous cutting operations. DO NOT use lapping compound after the final cut is made. The finished valve seat should have a velvety smooth finish and not a highly polished or shiny finish. This will provide a soft surface for the final seating of the valve which will occur during the first few seconds of engine operation.
5. Clean and assemble the head and valve components. Fill the intake and exhaust ports with gasoline to check for leaks. If any leaks occur, inspect the valve seat and face for burrs or other things that could prevent the valve from sealing.

NOTE: Always use extreme caution when handling gasoline.

NOTE: After servicing the valve seat, be sure to adjust the tappet clearance after the cylinder head has been reinstalled.

6. If, by any chance, too much stock has been removed from the seat during the refacing work resulting in loss of the specified tappet clearance even with the thinnest shim disc, then the only remedy is to grind off the stem end face of the valve with a valve refacer, thereby shortening the overall length of the valve.

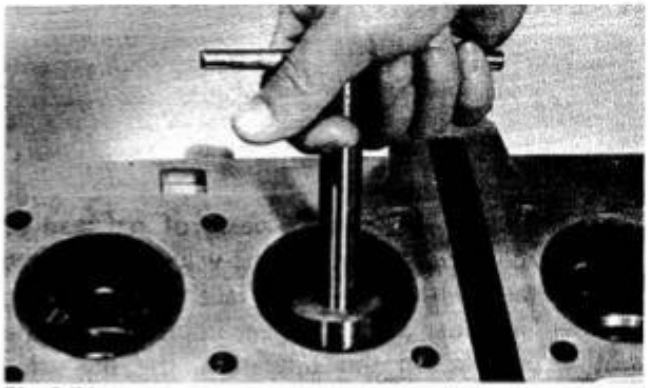

Fig. 2-71

IMPORTANT: This remedy is permissible where the length ① will not be reduced to less than 4.0 mm. If this length becomes shorter than 4.0 mm, then the valve must be replaced.

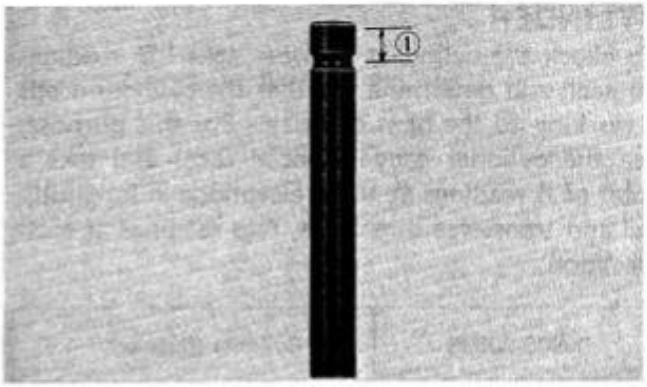

Fig. 2-73

IMPORTANT: After installing the valve whose stem end has been ground off as above, check to be sure that the face ② of valve stem end is above valve cotter ③.

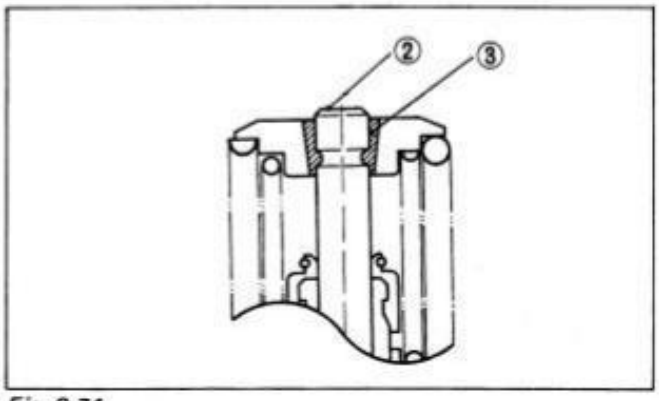

Fig. 2-74

VALVE SPRING

It is the force of the two coil springs by which the valve seats tight. Weakened springs result in reduced engine power output, and often account for the chattering noise coming from the valve mechanism.

Check the springs for strength by measuring their free lengths and also the force required to compress them. If the limit indicated below is exceeded by the free length reading or if the measured force does not fall within the range specified, replace the spring by replacement one of SUZUKI supply.

NOTE: Replace all the springs at a time, outer and inner, if any one of these is found to be beyond the limit.

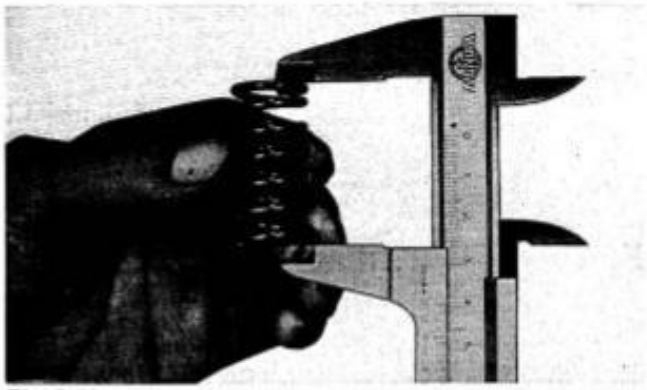

Fig. 2-75

Free length specification

Spring	Standard	Limit
INNER	35.3 - 37.0 mm (1.39 - 1.46 in)	33.9 mm (1.33 in)
OUTER	43.0 - 43.25 mm (1.69 - 1.70 in)	41.3 mm (1.63 in)

Spring rate specification

INNER	29.3 - 34.0 kg/23 mm (64.59 - 74.96 lb/0.91 in)
OUTER	50.4 - 58.3 kg/27 mm (111.11 - 128.53 lb/1.06 in)

CYLINDER

To check the cylinders for wear, take I.D. readings on each and determine whether the cylinder needs reworking to the next oversize. For this purpose, use the cylinder gauge (special tool) and take a total of 6 readings at three elevations in longitudinal and transverse directions, two readings at each elevation.

09900-20508	Cylinder gauge set

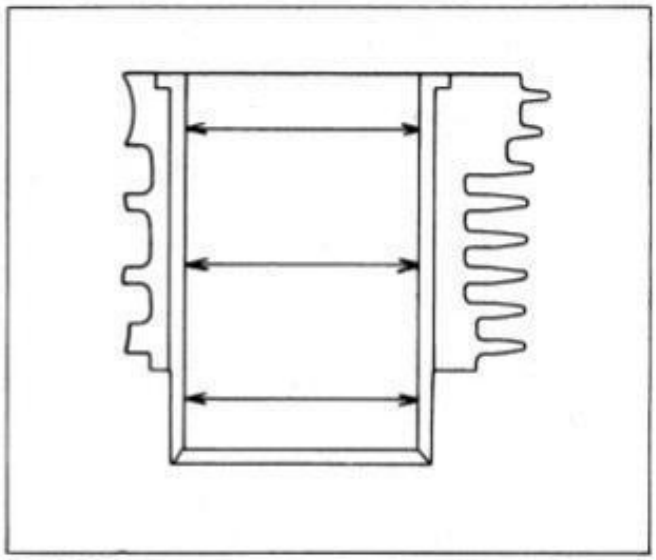

Fig. 2-76

If any of the readings exceeds the I.D. limit or if the difference between the maximum and the minimum reading exceeds the limit on difference or, further, if the bore surface is found badly burned or scored, rebore the cylinder to the size determined by the oversize piston available.

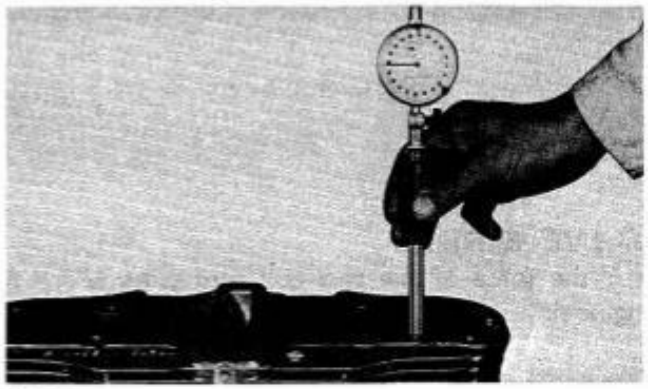

Fig. 2-77

Cylinder I.D. specification

Standard I.D.	Service limit
56.000 - 56.015 mm (2.2047 - 2.2053 in)	56.080 mm (2.2079 in)

Oversize piston	0.5 mm, 1.0 mm

Piston-to-cylinder clearance	0.050 - 0.060 mm (0.0020 - 0.0024 in)

PISTON AND PISTON RING

Piston wear determination

Mike the piston at the places and in the directions indicated. If the service limit is reached, replace the piston.

Piston diameter specification

Standard	Service limit
55.945 - 55.960 mm (2.2026 - 2.2031 in)	**55.880 mm (2.2000 in)**

Decarboning

Using a soft-metal scraper, decarbon the crown of the piston. Clean the ring grooves similarly.

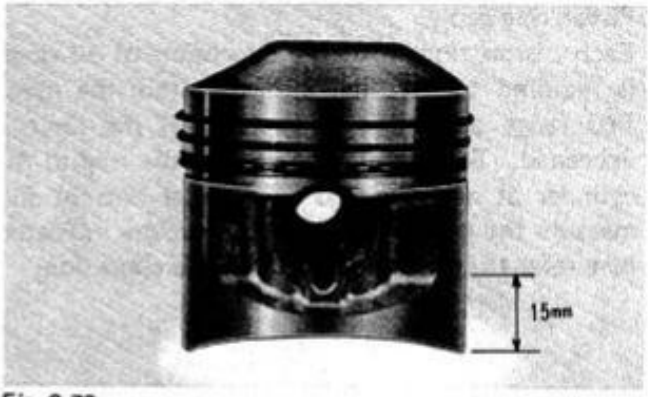

Fig. 2-78

Piston ring clearance in the groove

Check on each ring with a thickness gauge. If the limit on clearance is exceeded by any of the three rings, determined whether the ring or the piston should be replaced by measuring the ring thickness and the groove width. Limits are specified for the width and thickness.

Fig. 2-79

Ring-to-groove clearance specification

Piston ring	Standard	Limit
1st	0.020 - 0.055 mm (0.0008 -0.0022 in)	**0.180 mm (0.0071 in)**
2nd	0.020 - 0.060 mm (0.0008 -0.0024 in)	**0.150 mm (0.0059 in)**

Ring thickness specification

Piston ring	Standard	Limit
1st	1.175 - 1.190 mm (0.0463 - 0.0469 in)	1.10 mm (0.043 in)
2nd	1.170 - 1.190 mm **(0.0461 - 0.0469 in)**	1.10 mm (0.043 in)

Ring groove width specification

Ring groove	Standard	Limit
1st	**1.21 - 1.23 mm (0.047 - 0.048 in)**	1.30 mm (0.051 in)
2nd	**1.21 - 1.23 mm (0.047 - 0.048 in)**	1.30 mm (0.051 in)
OIL	**2.51 - 2.53 mm (0.099 - 0.100 in)**	2.60 mm (0.102 in)

Piston ring gap

Each piston ring, with the exception of oil rings, is required to have its ring gap within the specified range and must be replaced if the limit is exceeded. To measure the gap, fit the ring to the cylinder at near the end of cylinder bottom and measure the gap. The specification values indicated here refer to the gap measured in this condition.

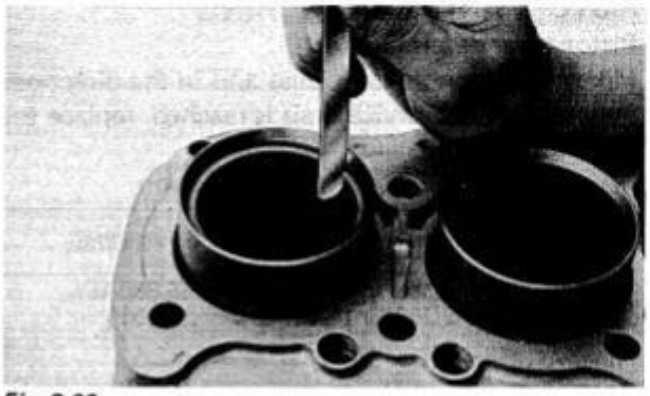

Fig. 2-80

Ring gap specification

Piston ring	Standard	Limit
1st and 2nd	0.1 - 0.3 mm (0.004 - 0.012 in)	0.7 mm (0.03 in)

A piston ring with its elastic strength reduced to a critical value must be replaced. For this reason, the limit is specified on free-state ring gap, as follows.

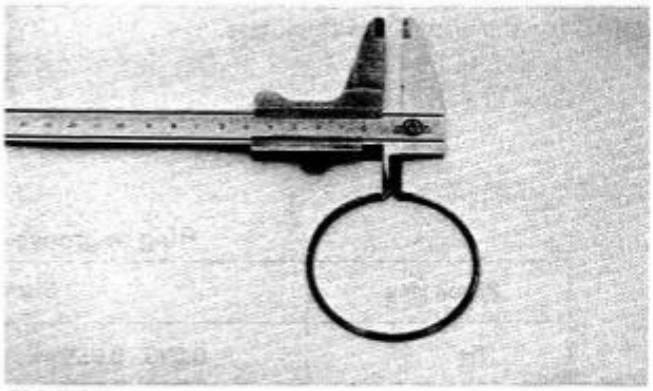

Fig. 2-81

Free-state ring gap specification

Piston ring	Standard	Limit
1st	6.5 mm (0.26 in)	5.2 mm (0.20 in)
2nd	6.5 mm (0.26 in)	5.2 mm (0.20 in)

CRANKSHAFT

Crankpin wear and big end side clearance

Check the wear of each crankpin in terms of connecting rod movement by using a dial gauge as shown.

Deflection service limit	3 mm (0.12 in)

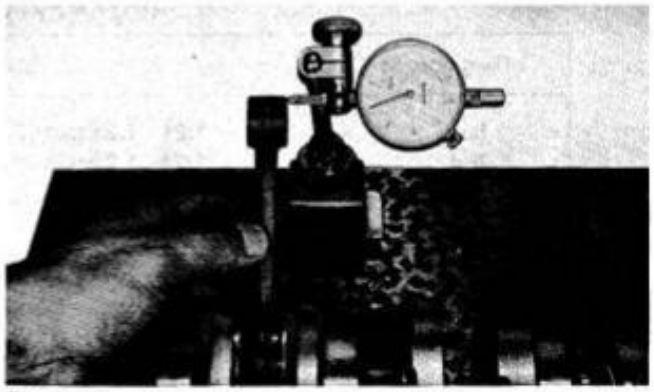

Fig. 2-82

Push the big end of the connecting rod to one side and measure its side clearance with a thickness gauge.

Big end side clearance specification

Standard	Limit
0.10 - 0.65 mm (0.004 - 0.026 in)	1.00 mm (0.039 in)

Fig. 2-83

Where the limit is exceeded, replace crankshaft assembly or reduce the deflection and the side clearance within the limit by replacing the worn parts — connecting rod, big end bearing, crankpin and thrust washer etc.

Crankshaft runout

Support the crankshaft with "V" blocks as shown, with the two end bearings resting on the blocks. Rig up the dial gauge, as shown, and rotate the crankshaft slowly to read the runout.

Replace the crankshaft if the runout is greater than the limit.

Crankshaft runout specification

Standard	Service limit
0 - 0.03 mm (0 - 0.0012 in)	0.05 mm (0.002 in)

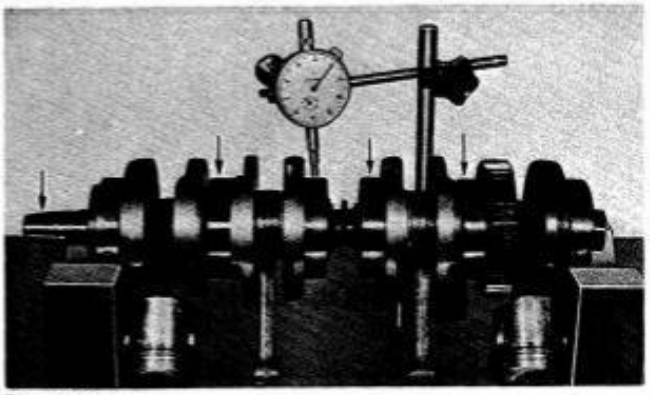

Fig. 2-84

OIL SUMP STRAINER

Wash the strainer clean, as necessary. Check to be sure that the strainer screen is free of any sign of rupture.

Fig. 2-85

OIL FILTER

Inspect the filter element for cleanliness. Replace the element if it is found dirty. Prescribed periodical replacement for this filter does not mean that the element should be replaced only at the end of each interval.

Fig. 2-86

OIL PUMP

There are three clearances to be checked in order to determine whether the oil pump should be replaced or not.

Tip clearance

This is the clearance between inner rotor and outer rotor. Use a thickness gauge.

Tip clearance limit	0.2 mm (0.008 in)

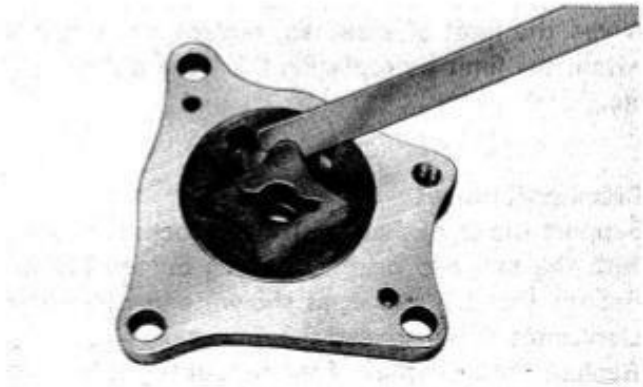

Fig. 2-87

Outer rotor clearance in the body

Use a thickness gauge.

Outer rotor clearance limit	0.25 mm (0.010 in)

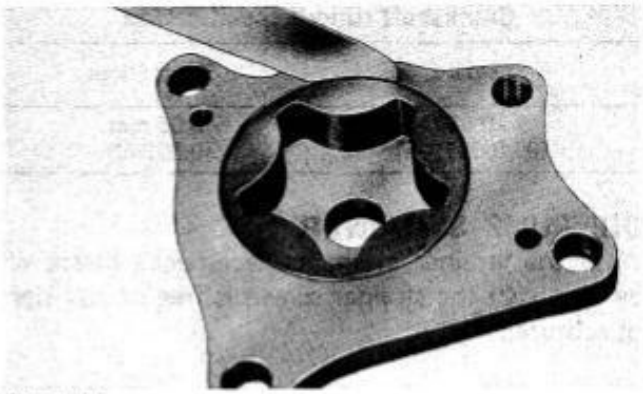

Fig. 2-88

Side clearance

Put a straightedge to the pump and measure the clearance under the straightedge, as shown.

Side clearance limit	0.15 mm (0.0059 in)

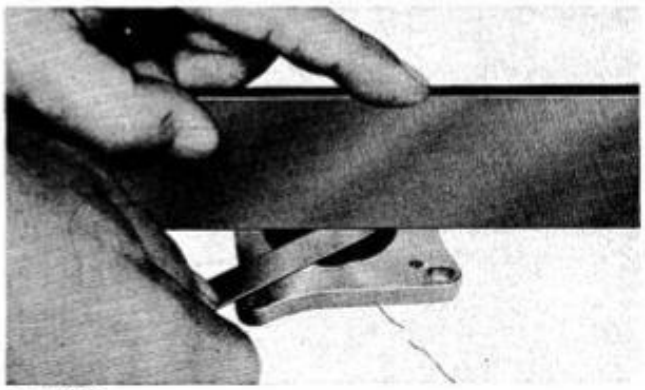

Fig. 2-89

The oil pump must be replaced where any of these limits is exceeded.

CLUTCH

Free length of clutch springs

Measure the free length of each coil spring with a caliper rule, and evaluate the elastic strength of each as against the specified limit. Replace any spring not within the limit.

Clutch spring free length specification

Standard (when new)	Limit
38.4 mm (1.51 in)	35.9 mm (1.41 in)

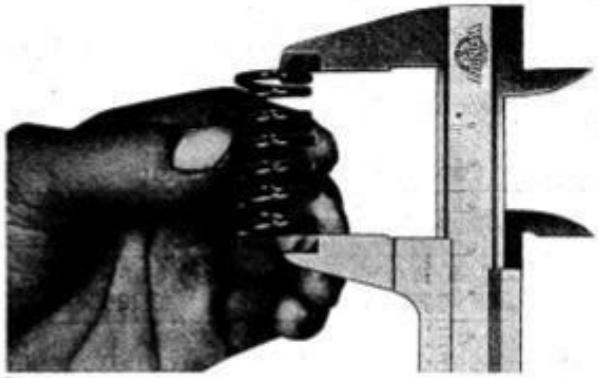

Fig. 2-90

Clutch drive plate wear

Measure the thickness of each drive plate with a caliper rule. Replace drive plates found to have worn down to the limit.

Drive plate thickness specification

Standard (when new)	Limit
2.9 - 3.1 mm (0.11 - 0.12 in)	2.6 mm (0.10 in)

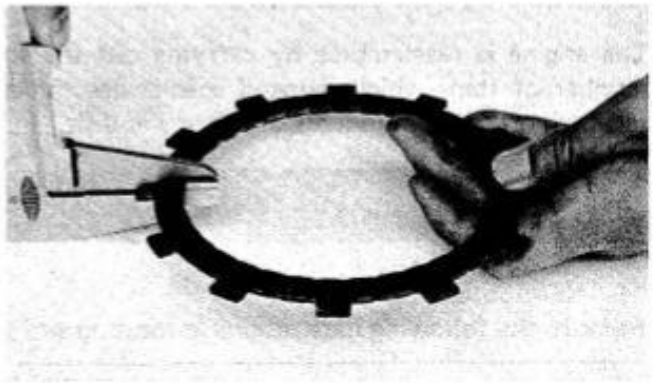

Fig. 2-91

Clutch plate distortion

Check each plate for distortion by placing it on a surface plate and by inserting a thickness gauge into under the clutch plate at several places. The limits on distortion in terms of clearance for drive plates and driven plates are specified as follows:

Drive plate distortion limit	0.2 mm (0.008 in)
Driven plate distortion limit	0.1 mm (0.004 in)

Be sure to replace those plates, if any, exceeding this limit.

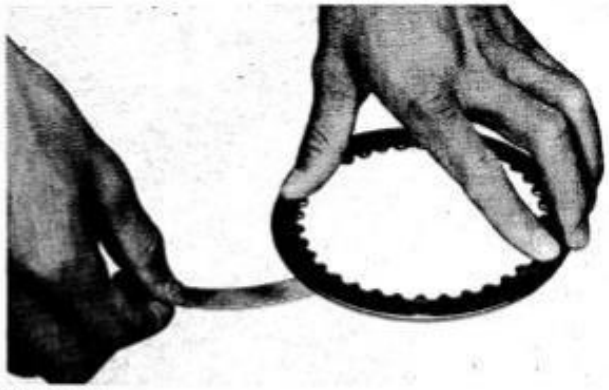

Fig. 2-92

TRANSMISSION

Gear backlash

Use a dial gauge to check the backlash. Drive gear and driven gear must be replaced if their backlash exceeds the limiting backlash.

Transmission gear backlash specification

Gears	Standard	Limit
1st, 2nd,3rd and 4th	0 - 0.04 mm (0 - 0.002 in)	0.09 mm (0.004 in)
5th and 6th	0.05 - 0.10 mm (0.002 - 0.004 in)	0.15 mm (0.006 in)

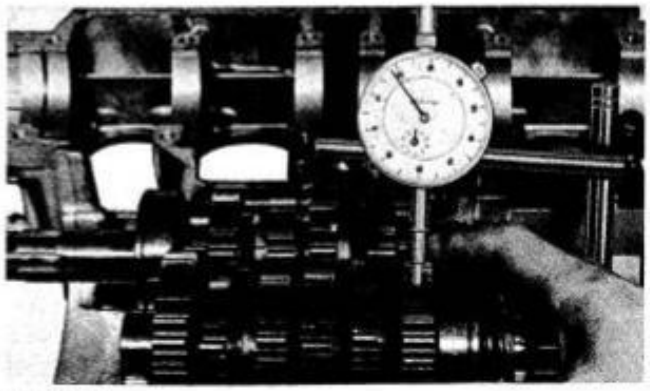

Fig. 2-93

Shift forks

"Gear slipping" is often due to excessively worn shift forks. Mike each shift fork thickness and, if the limit is reached, replace it.

Fork thickness specification

Standard	Limit
5.30 - 5.40 mm (0.209 - 0.213 in)	5.20 mm (0.205 in)

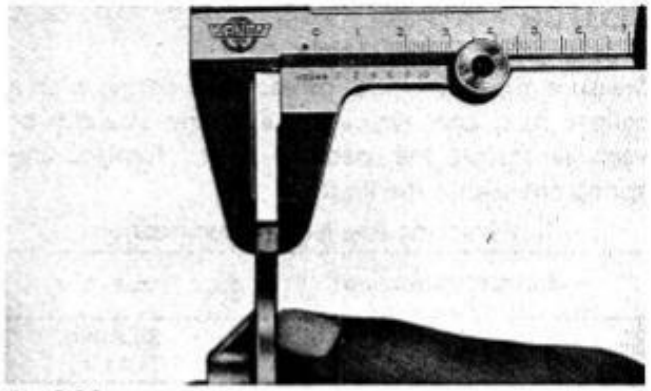

Fig. 2-94

ENGINE REASSEMBLY

The engine is reassembled by carrying out the steps of disassembly in the reversed order, but there are a number of steps which demand special descriptions or precautionary measures. Only those steps will be set forth on the components of the power unit.

NOTE: Apply engine oil to each moving and sliding part before installing it in reassembling.

TRANSMISSION

Refer to the following illustrations in locating and positioning gears, washers and circlips.

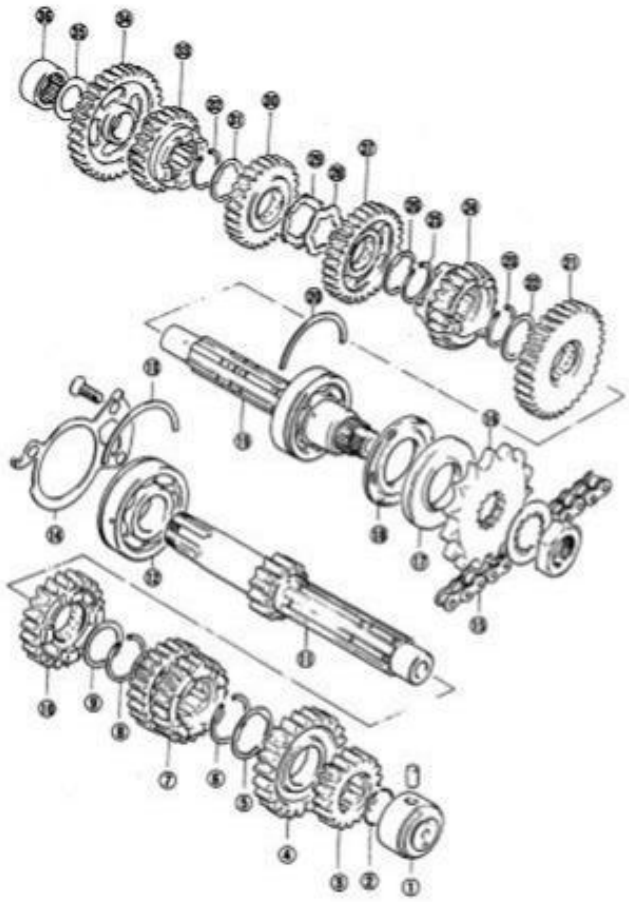

① LH bearing
② Circlip
③ 2nd drive gear
④ 6th drive gear
⑤ Washer
⑥ Circlip
⑦ 3rd and 4th drive gear
⑧ Circlip
⑨ Washer
⑩ 5th drive gear
⑪ Countershaft
⑫ RH bearing
⑬ C ring
⑭ Bearing holder
⑮ Drive chain
⑯ Engine sprocket
⑰ Oil seal
⑱ Oil seal
⑲ Driveshaft
⑳ C ring
㉑ 2nd driven gear
㉒ Washer
㉓ Circlip
㉔ 6th driven gear
㉕ Circlip
㉖ Washer
㉗ 3rd driven gear
㉘ Lock washer
㉙ Lock washer
㉚ 4th driven gear
㉛ Washer
㉜ Circlip
㉝ 5th driven gear
㉞ 1st driven gear
㉟ Washer
㊱ RH bearing

Fig. 2-95

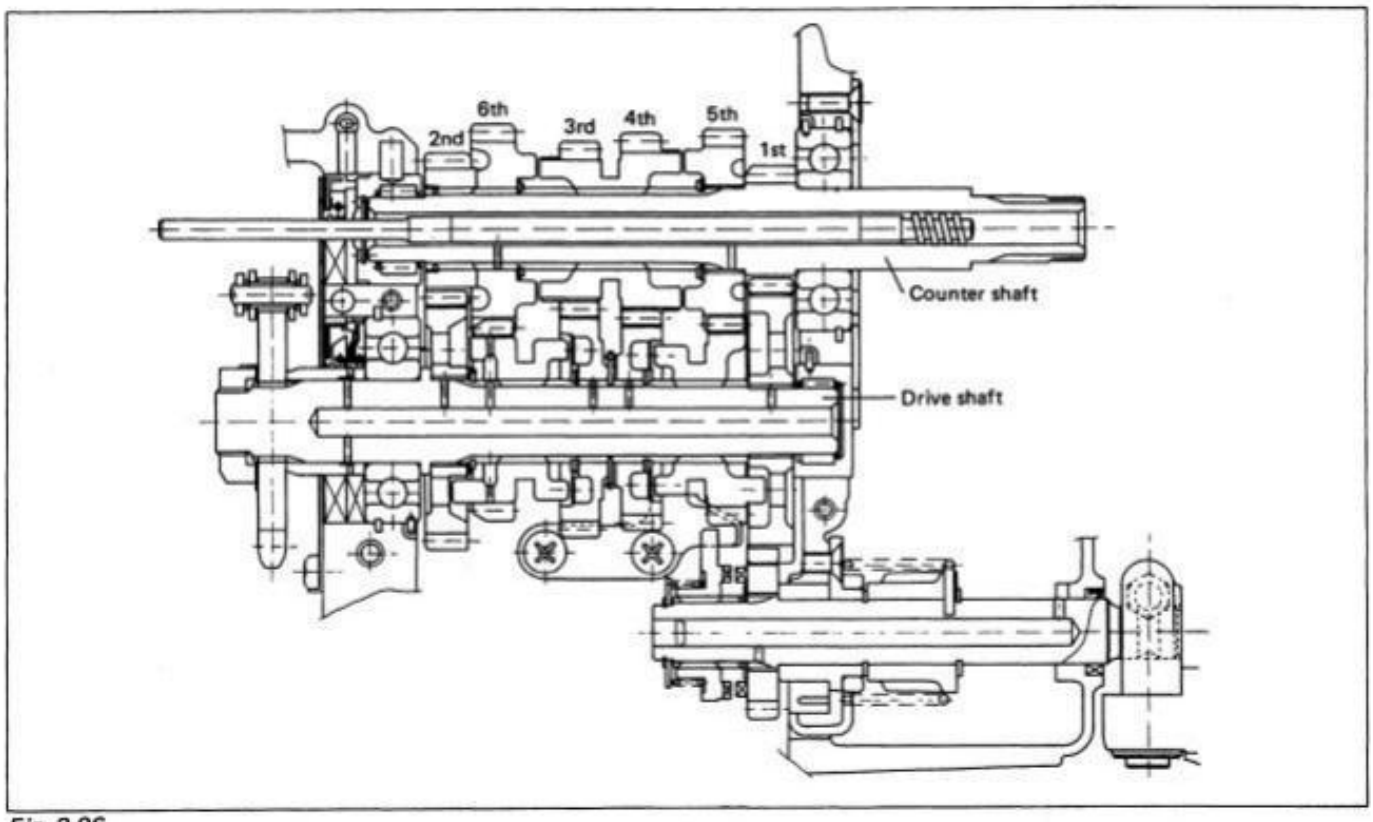

Fig. 2-96

Mounting gearshift forks

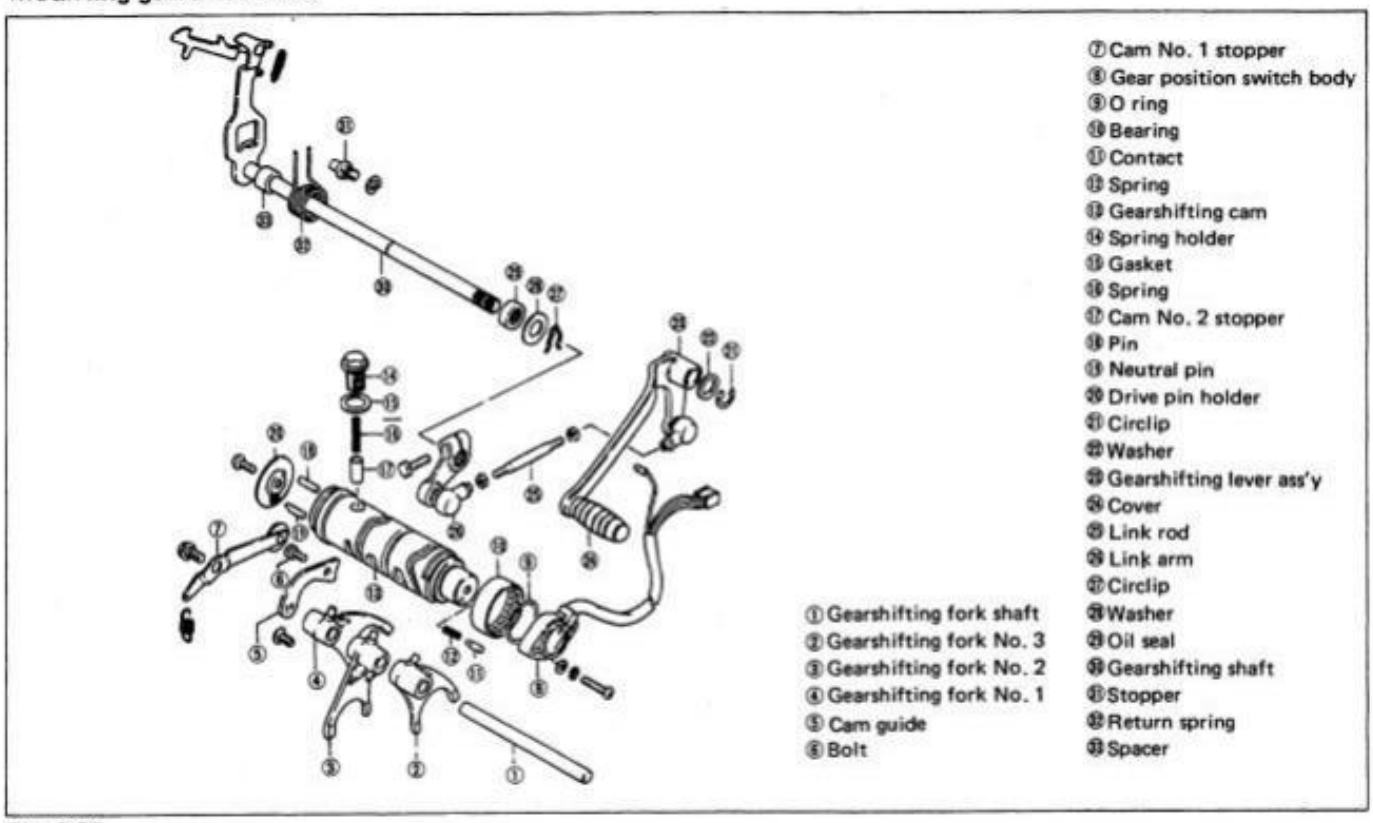

Fig. 2-97

Refer to the illustration in regard to the correct positions and orientations of the forks when installing these parts.

①: Gearshift fork for 3rd drive gear
②: Gearshift fork for 5th driven gear
③: Gearshift fork for 6th driven gear

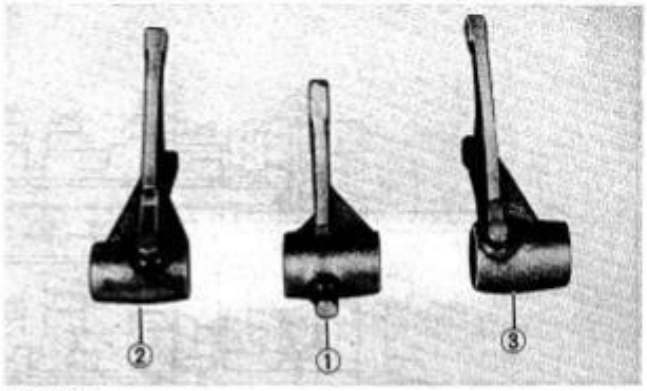

Fig. 2-98

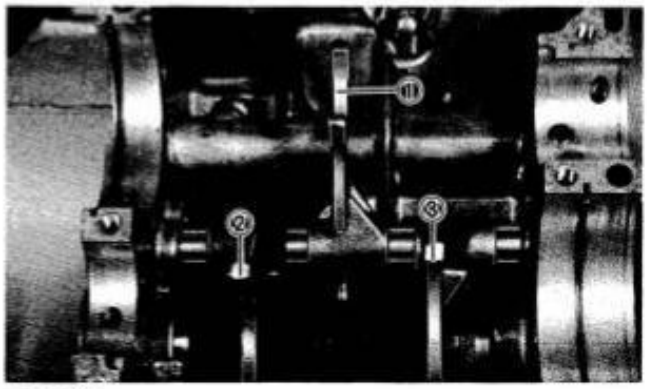

Fig. 2-99

Before driving in fork shaft stopper screw ①, apply THREAD LOCK CEMENT "1342" (99000-32050) to its threads.

99000-32050	Thread lock cement "1342"

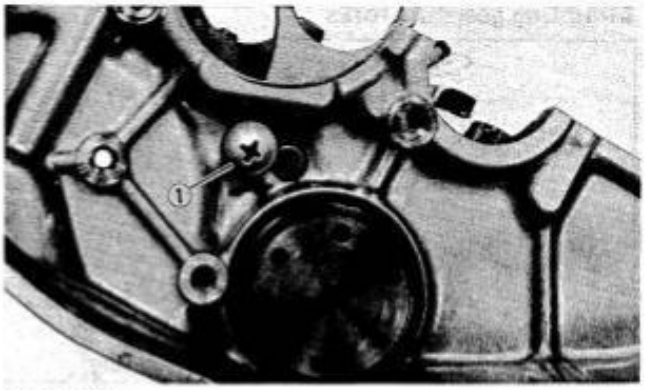

Fig. 2-100

Mounting 4th driven gear on the driveshaft:

1. Fit lock washer No. 1 ① to the groove indicated.

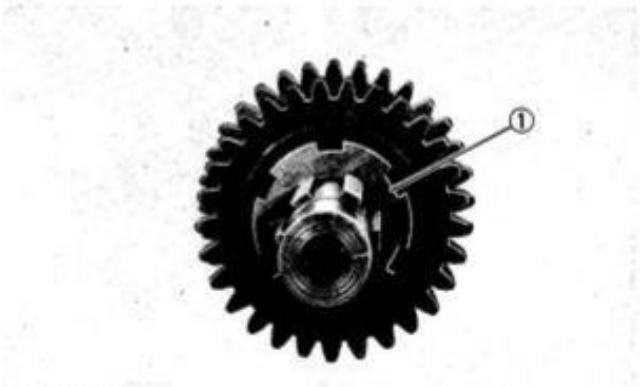

Fig. 2-101

2. Install lock washer No. 2 ② as shown.

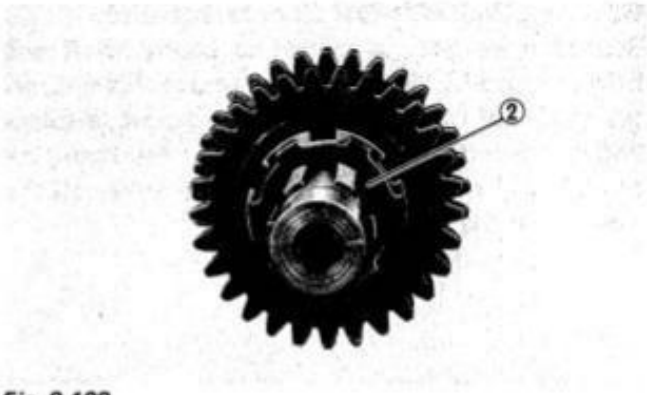

Fig. 2-102

3. Adjust the two washers (No. 1 and No. 2) to match them together, admitting the tongues of No. 2 into the notches of No. 1.

Fig. 2-103

4. Mount 4th gear, and retain it in place by installing the washer ③ and circlip ④.

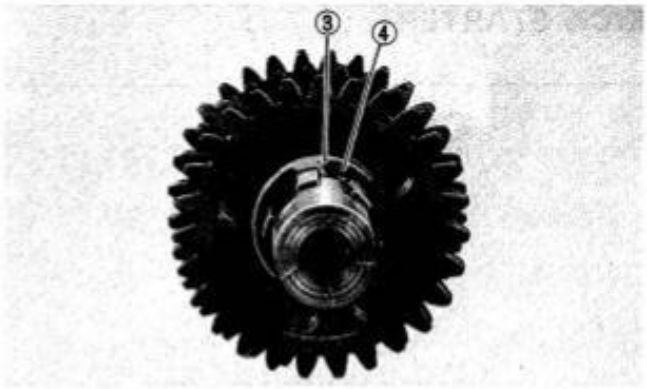

Fig. 2-104

Drive shaft oil seal

Install the two oil seals, positioning each as shown.

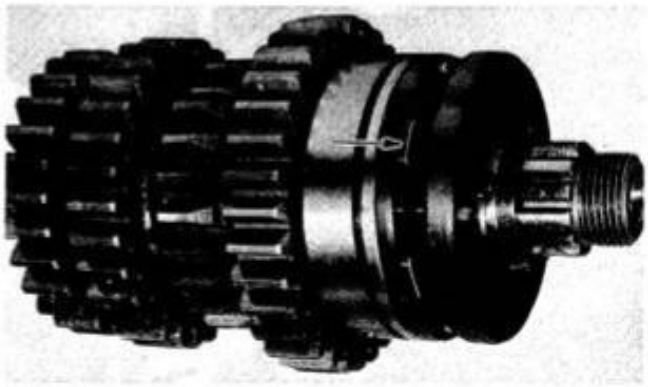

Fig. 2-105

Removing 2nd drive gear from countershaft

Second drive gear is splined to countershaft and held in place by "C" ring. To remove this ring, set the circlip of 6th drive gear off its groove, displace 2nd and 6th drive gears to the right and then pick off the "C" ring. Second drive gear comes off the shaft when the ring is removed.

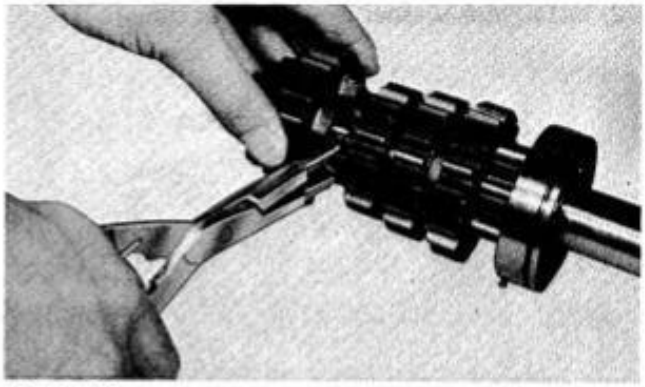

Fig. 2-106

Bearing dowel pin

Be sure to install the bearing dowel pins in the locations indicated.

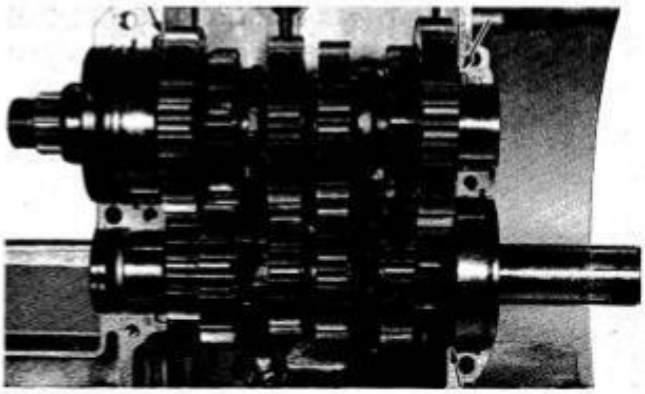

Fig. 2-107

KICK STARTER

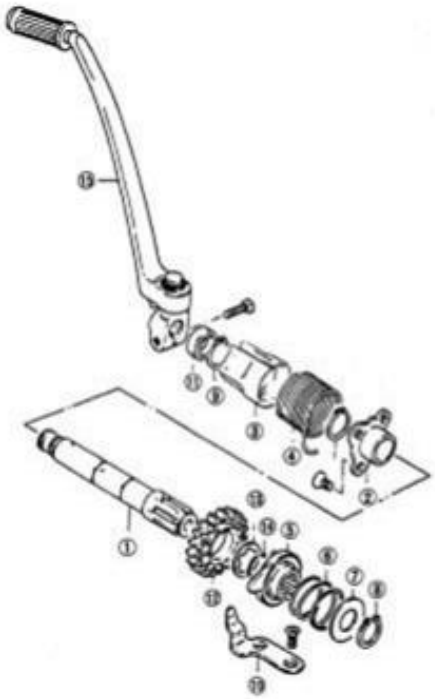

① Kick starter shaft
② Shaft holder
③ Spring guide
④ Spring
⑤ Kick starter
⑥ Spring
⑦ Plate
⑧ Circlip
⑨ Circlip
⑩ Starter Guide
⑪ Oil seal
⑫ Kick starter drive gear
⑬ Washer
⑭ Circlip
⑮ Kick starter lever

Fig. 2-108

Install starter guide ① , securing it by tightening its two screws. Be sure to have the threads of these screws coated with THREAD LOCK SUPER "1333B" just before running them in.

99000-32020	Thread lock super "1333B"

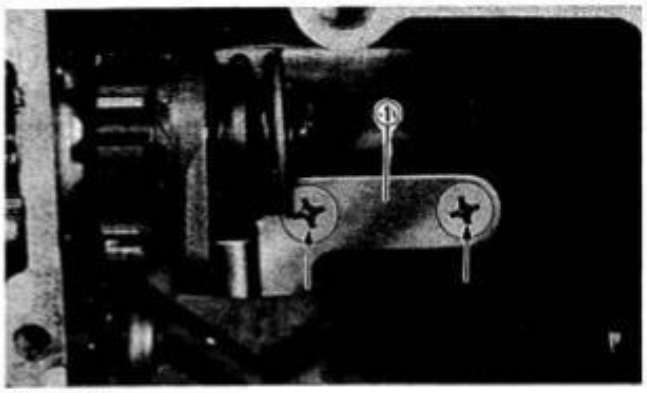

Fig. 2-109

Install the kick shaft and associated parts by referring to the illustration. When mounting kick starter ① on the shaft, be sure to match the punch mark ② on the starter to that ③ on the shaft.

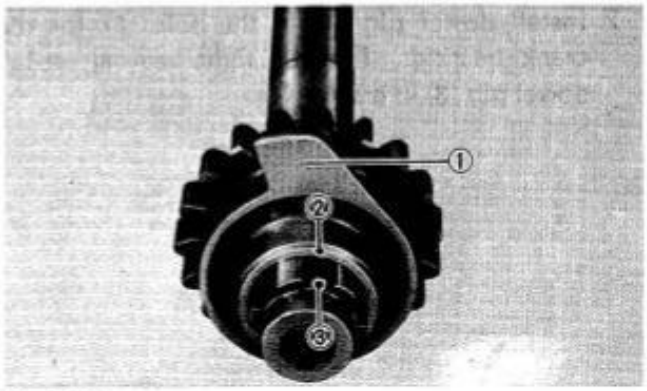

Fig. 2-110

CRANKSHAFT AND CRANKCASE

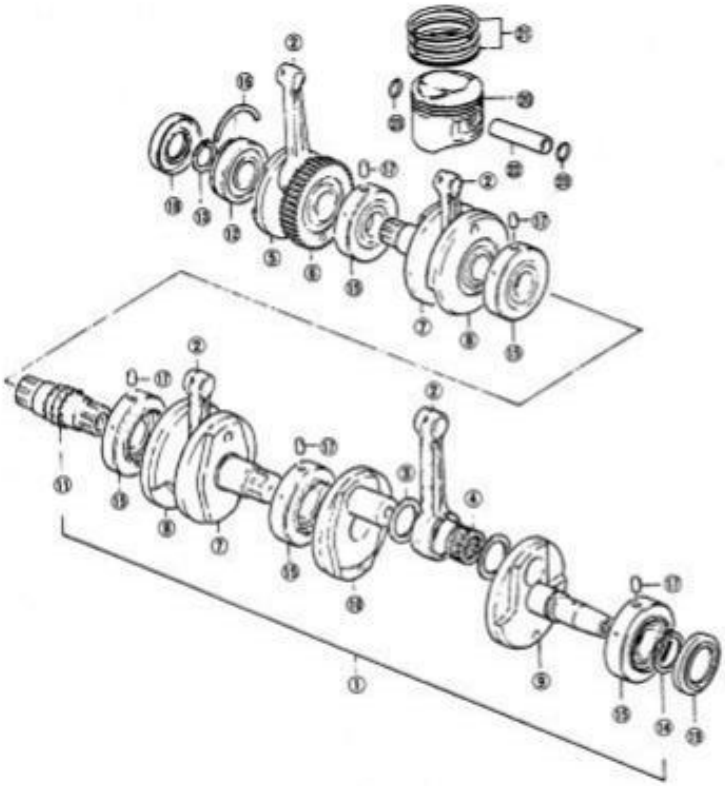

① Crankshaft ass'y
② Connecting rod
③ Washer
④ Bearing
⑤ RH crankshaft
⑥ Primary drive gear
⑦ Middle crankshaft
⑧ Middle crankshaft web
⑨ LH crankshaft
⑩ LH crankshaft web
⑪ Timing chain drive shaft
⑫ RH bearing
⑬ Circlip
⑭ Circlip
⑮ Bearing
⑯ RH bearing C ring
⑰ Pin
⑱ RH oil seal
⑲ LH oil seal
⑳ Piston
㉑ Piston ring set
㉒ Piston pin
㉓ Circlip

Fig. 2-111

1. When fitting the right oil seal to crankshaft, be sure to position the seal in such a way that its end face with protrusions ① comes on bearing side. Apply engine oil to its lip portion before installing the seal.

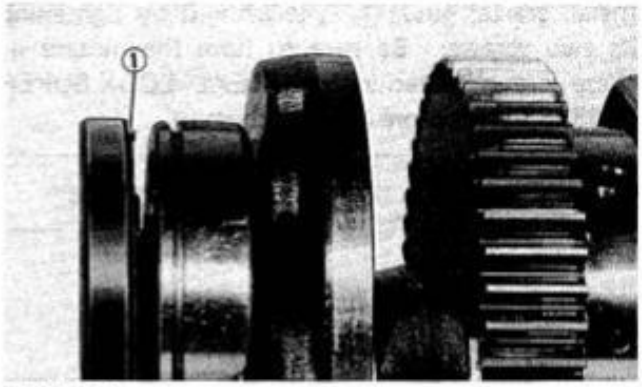

Fig. 2-112

2. Install dowel pin ① in the hole ② for the crank bearing. For the right bearing, install dowel pin ③ in groove ④.

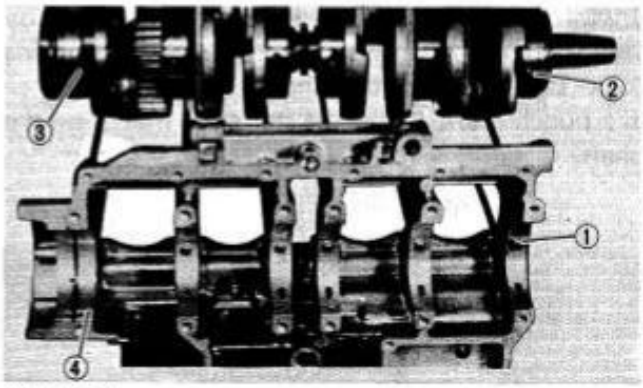

Fig. 2-113

3. Before fitting the lower crankcase to the upper one, be sure to apply "SUZUKI BOND No. 1215" uniformly to the mating surface of the lower crankcase.

99000-31110	SUZUKI BOND No. 1215

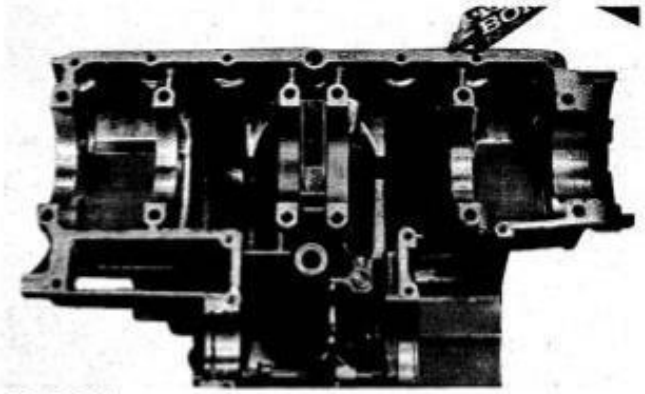

Fig. 2-114

- Be careful not to leave out "O" ring ①.

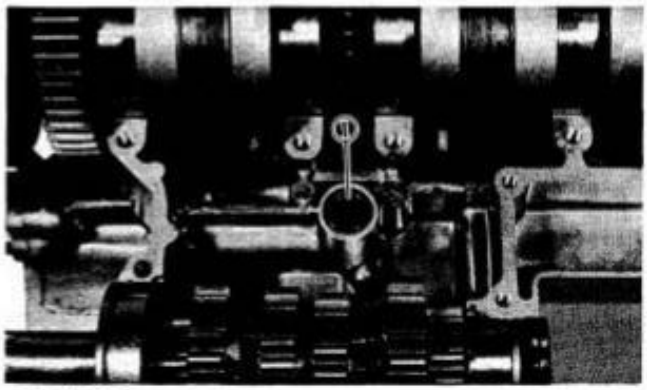

Fig. 2-115

- When securing the lower crankcase, tighten the twelve 8-mm bolts in the ascending order of numbers assigned to these bolts, tightening each bolt a little at a time to equalize the pressure. Tighten all the securing bolts to the specified torque values.

Tightening torque for 8-mm bolts	2.0 kg-m (14.5 lb-ft)
Tightening torque for 6-mm bolts	1.0 kg-m (7.0 lb-ft)

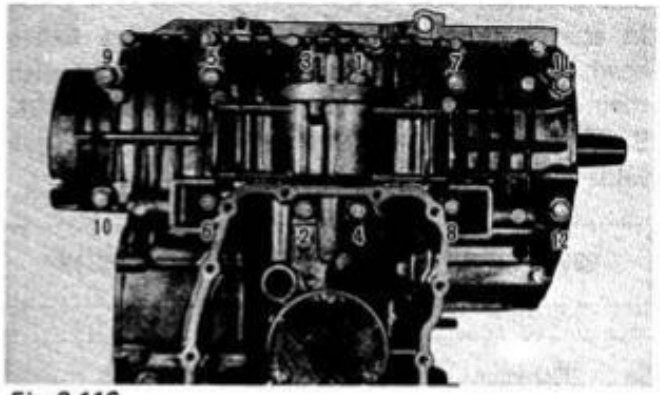

Fig. 2-116

STARTER AND GENERATOR ROTOR

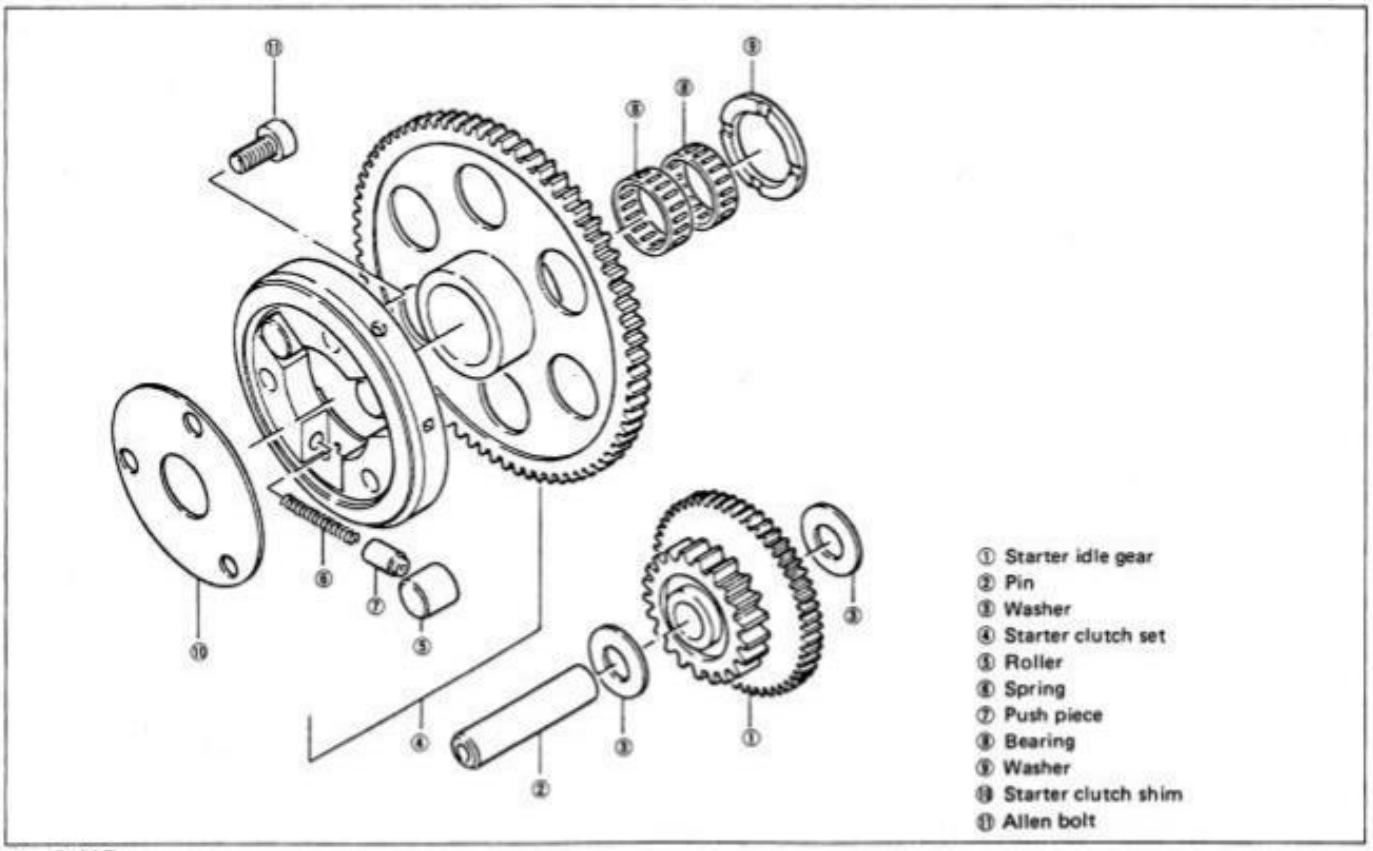

Fig. 2-117

Starter clutch

In starter clutch reassembling, the three Allen-head bolts ① are prescribed to be run in with their screw threads coated with THREAD LOCK SUPER "1333B" and tightened to this torque value:

99000-32020	Thread lock super "1333B"

Tightening torque	1.5 - 2.0 kg-m (11.0 - 14.5 lb-ft)

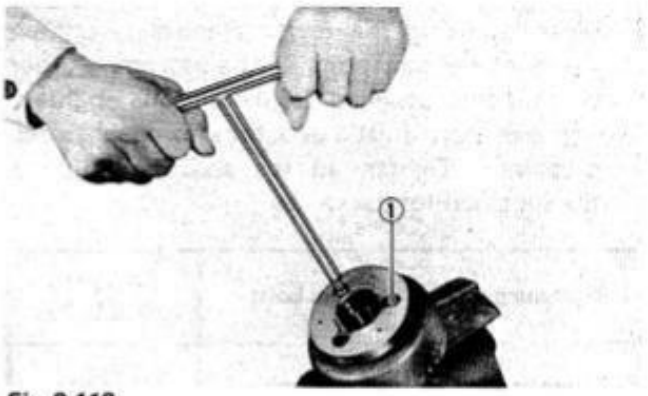

Fig. 2-118

Copper washer

Be sure to position the copper washer ① for starter clutch gear as shown. The chamfered side ② of this washer faces the crank bearing.

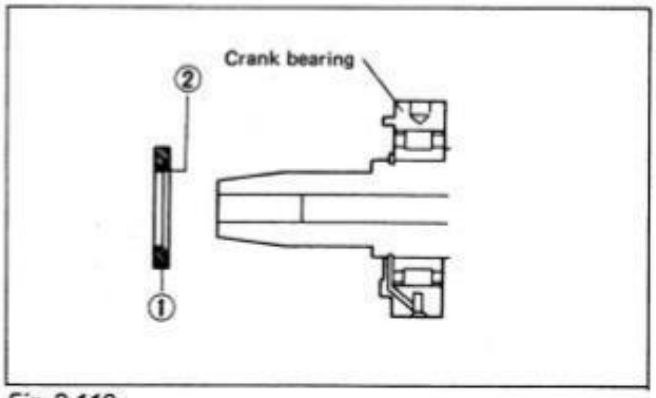

Fig. 2-119

Starter idle gear

Fit two washers to idle gear, one washer to each side.

Fig. 2-120

Rotor

Install the rotor, as follows:

1) Degrease the tapered portion of the rotor and also the crankshaft. Use cleaning solvent to wipe off the oily or greasy matter to make these surfaces completely dry.
2) After mounting the rotor, secure the rotor by tightening the center bolt with applying THREAD LOCK SUPER "1332B" to the specified torque value.

99000-32090	Thread lock super "1332B"

Tightening torque	6.0 - 7.0 kg-m (43.5 - 50.5 lb-ft)

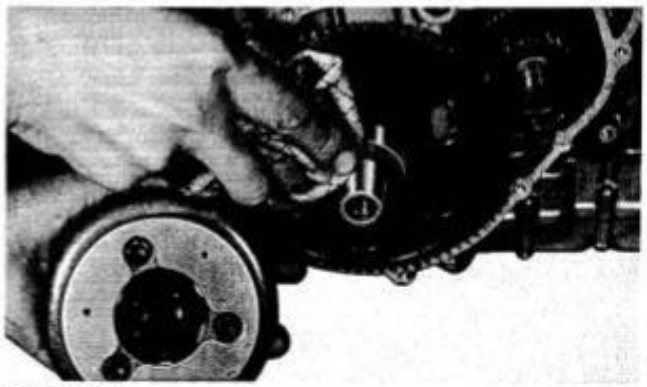

Fig. 2-121

Wires

Route the starter, generator and gear positioning switch lead wires as shown in the photo.

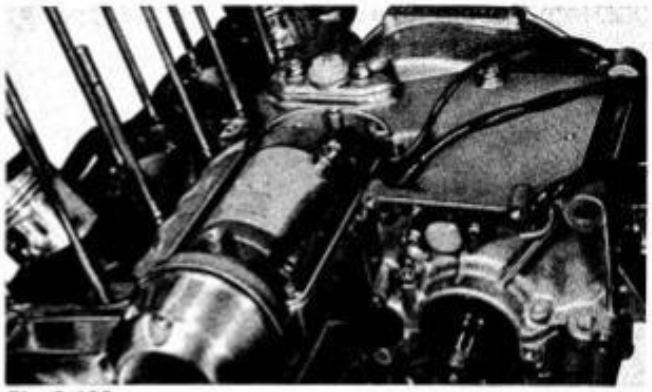

Fig. 2-122

NOTE:
1. Remember, an "O" ring is provided on gear positioning switch. Be sure to fit the ring as shown.
2. The job of installing the generator cover must be preceded by mounting the governor and tightening its center bolt ①. This sequence is necessary because the rotor holder (special tool: 09930-44510) ② must be put to the rotor in order to hold crankshaft steady, thus enabling center bolt ① to be torqued. With the cover installed in advance, there's no way to tighten bolt ①.

Fig. 2-123

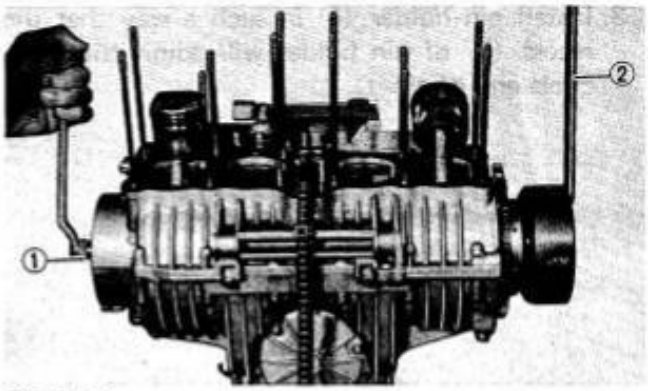

Fig. 2-124

GEARSHIFTING MECHANISM

Gearshifting cam pins

One of the six cam pins has a flat. This pin ① is to be installed in this manner:

1. Bring gearshifting cam to "NEUTRAL" position.

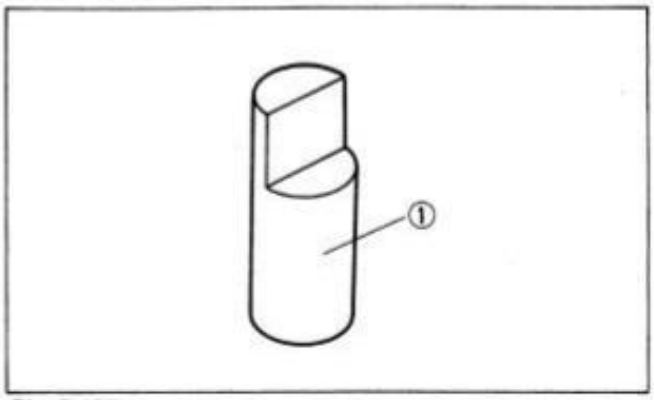

Fig. 2-125

2. Into the pin hole ③ closest to cam stopper ②, insert pin ① as shown.

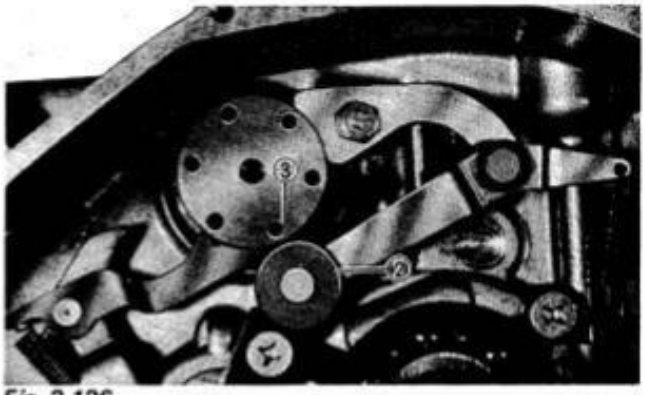

Fig. 2-126

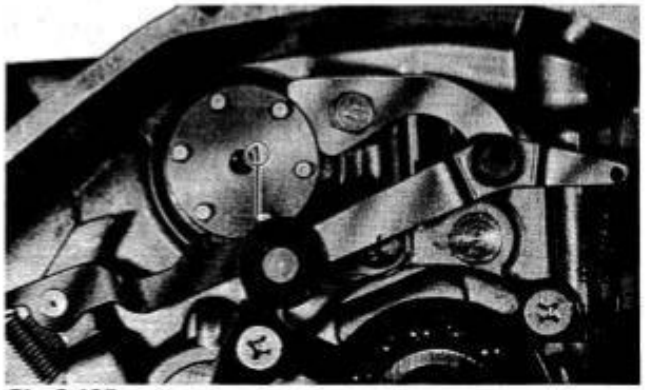

Fig. 2-127

3. Install pin holder ④ in such a way that the recess ⑤ of pin holder will admit the semi-circle end of pin ①.

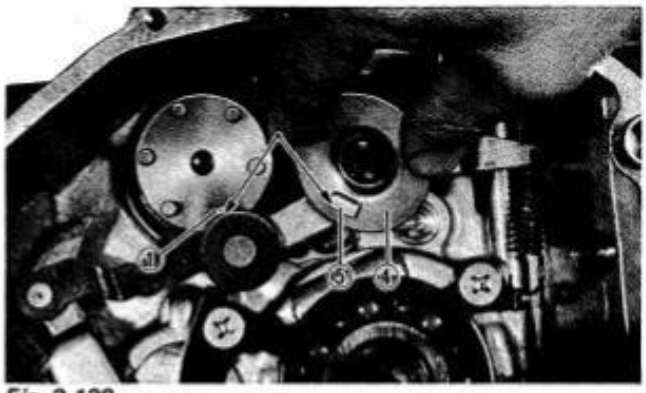

Fig. 2-128

Cam stopper

When tightening cam stopper bolt ②, make sure that the unthreaded portion of its head enters the hole provided in cam stopper ①. Note in the illustration that bolt ② fastens down cam guide ③ by the shoulder of this unthreaded portion. Apply THREAD LOCK "1342" to the thread of bolts, ② and ④.

99000-32050	Thread lock "1342"

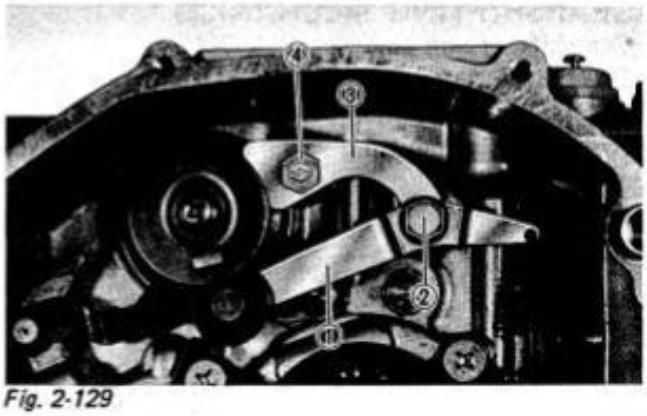

Fig. 2-129

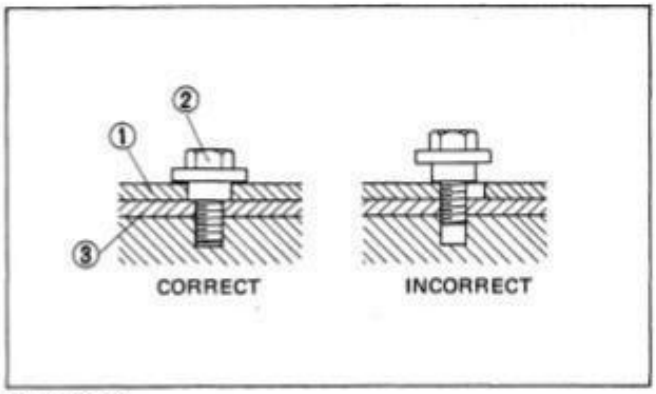

Fig. 2-130

NOTE: After tightening the cam stopper bolt, move the stopper back and forth with fingers to be sure that its movement is normal.

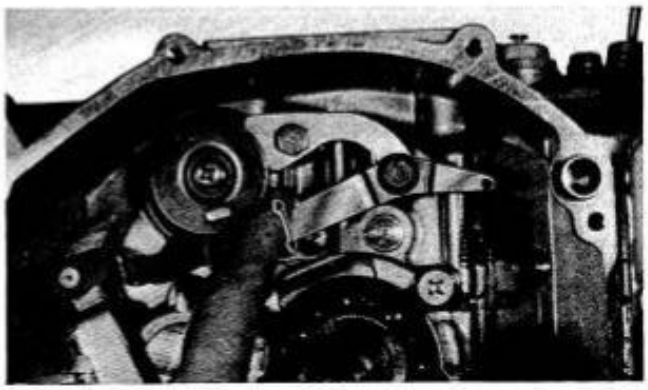

Fig. 2-131

OIL PUMP

Before starting to assemble the oil pump, apply engine oil to the sliding surfaces of the case, outer rotor, inner rotor and shaft and proceed as follows:

1. Position the inner rotor as shown.

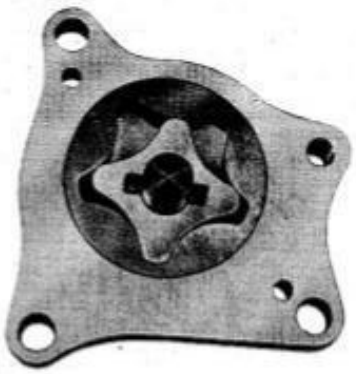

Fig. 2-132

2. Apply THREAD LOCK "1342" to the securing screw.

99000-32050	Thread lock "1342"

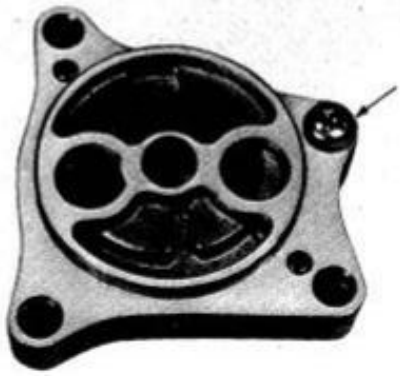

Fig. 2-133

3. Be careful not to leave out the two "O" rings.

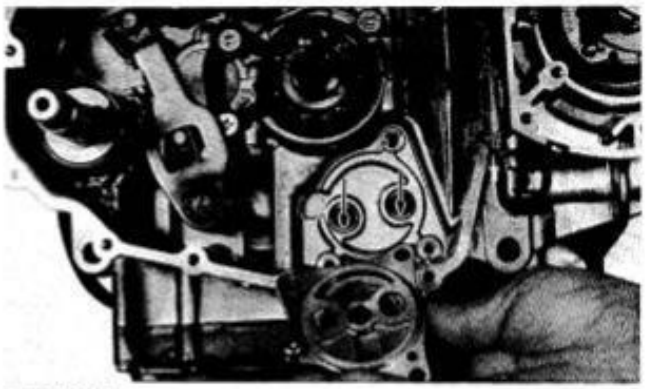

Fig. 2-134

NOTE: Upon installing the oil pump in crankcase, rotate the pump gear by hand to see if it turns smoothly.

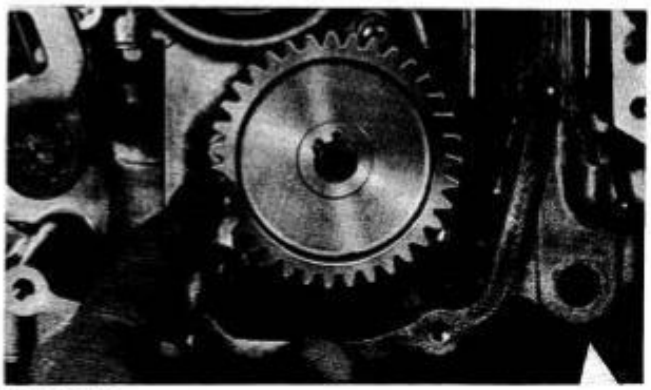

Fig. 2-135

CLUTCH, KICK STARTER SPRING AND ADVANCE GOVERNOR

1. Refer to the illustration for the correct positions of the clutch parts in their respective locations, paying particular attention to the orientation of each.

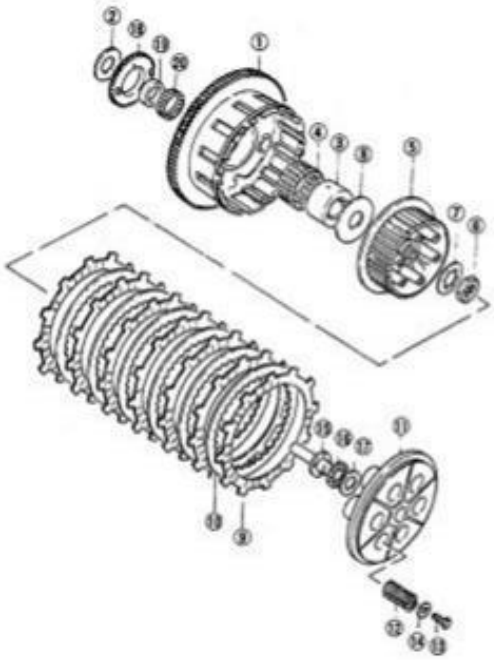

① Primary driven gear ass'y
② Washer
③ Spacer
④ Bearing
⑤ Sleeve hub
⑥ Nut
⑦ Washer
⑧ Washer
⑨ Drive plate
⑩ Driven plate
⑪ Pressure disk
⑫ Spring
⑬ Bolt
⑭ Washer
⑮ Push piece
⑯ Bearing
⑰ Washer
⑱ Oil pump drive gear
⑲ Spacer
⑳ Bearing

Fig. 2-136

2. When mounting the oil pump drive gear, be sure to fit its protrusion to the groove provided in primary driven gear.

Fig. 2-137

3. Install the spacer as shown.

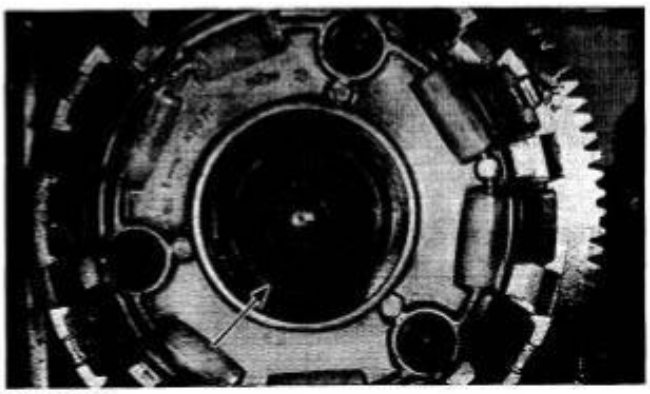

Fig. 2-138

4. Bear in mind that the thrust washer for clutch sleeve hub takes but one position in place.

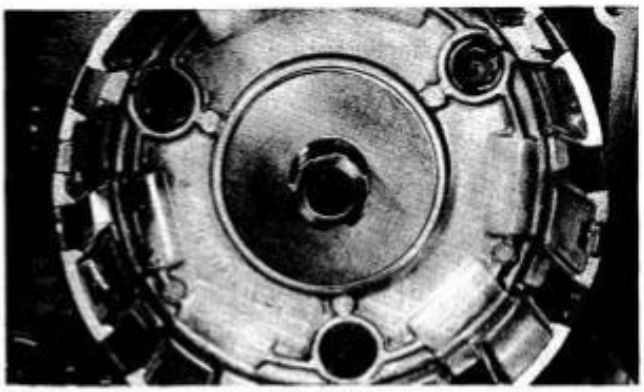

Fig. 2-139 *CORRECT*

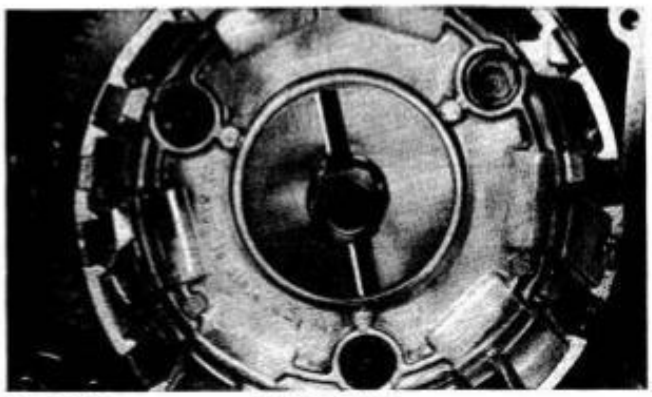

Fig. 2-140 *INCORRECT*

5. After tightening the clutch sleeve hub nut, be sure to lock the nut by positively bending the tongue of the washer. Tightening torque for the nut is specified.

Tightening torque	4.0 - 6.0 kg-m (29.0 - 43.5 lb-ft)

Fig. 2-141

NOTE: Tighten the clutch spring set bolts in the indicated manner, making sure that they are tightened just a little at a time to the same final tightness.

Tightening torque	0.4 - 0.7 kg-m (3.0 - 5.0 lb-ft)

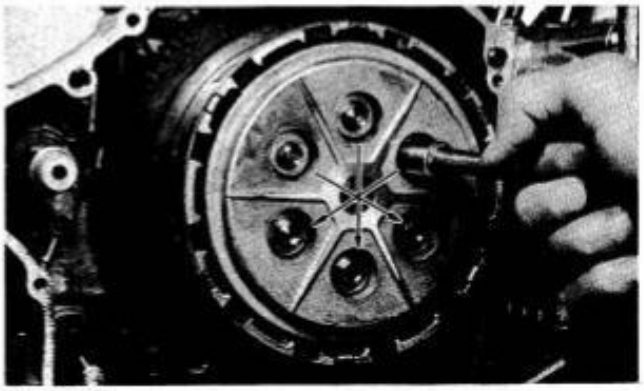

Fig. 2-142

6. Refer to the photo as to the method of installing the kick starter spring.

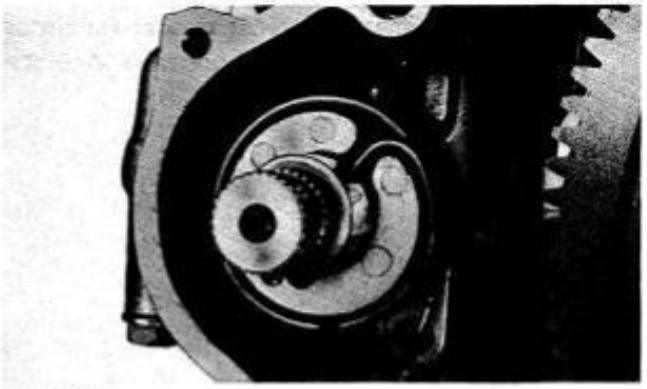

Fig. 2-143

7. When installing the advance governor, be sure that its protrusion fits snugly to the groove. Secure the governor by tightening its center bolt to this torque value:

Tightening torque	1.8 - 2.8 kg-m (13.0 - 20. 0 lb-ft)

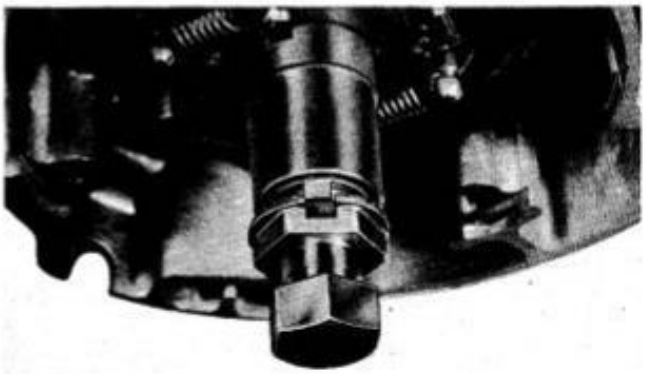

Fig. 2-144

PISTONS

Adhere to the following reminders when installing the pistons:

1. The piston is in correct position when its arrow (on the crown) points forward.
2. Discriminate the four pistons by referring to the cylinder numbers marked on their crowns at the time of disassembly.
3. Have each piston oiled lightly before installing it.
4. Be sure to use new circlips.

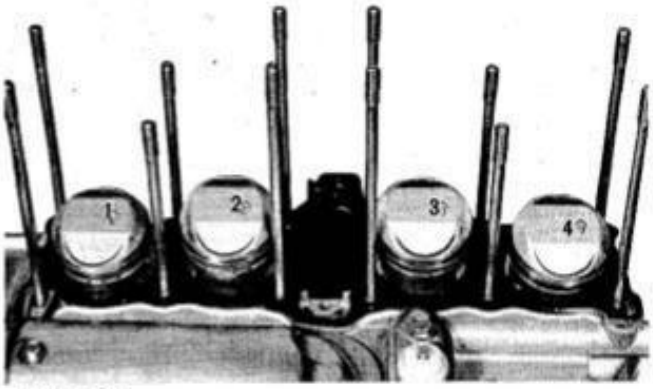

Fig. 2-145

PISTON RING

Installing 1st and 2nd rings

1st ring and 2nd (middle) ring differ in the shape of ring face and the face of 1st ring is chrome-plated whereas that of 2nd ring is not. The color of 2nd ring appears darker than that of the 1st one.

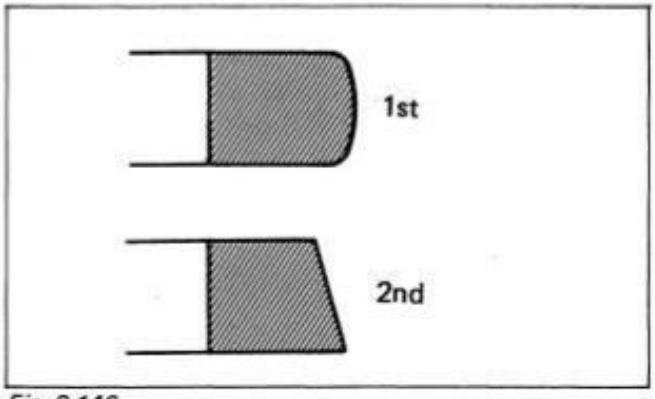

Fig. 2-146

1st and 2nd (middle) rings have letter "N" or "T" marked on the side. Be sure to bring the marked side to top when fitting them to the piston.

NOTE: Be sure to use piston rings of the same make: this applies to the three rings, 1st, 2nd and oil.

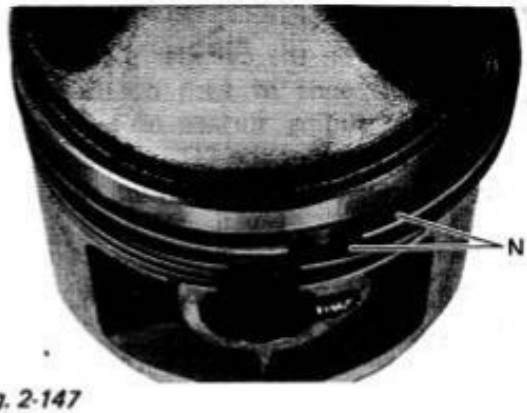

Fig. 2-147

Installing oil ring

The frist member to go into the ring groove is spacer ①. After placing spacer, fit the two side rails ②. Side designations, top and bottom, are not applied to the spacer and side rails: you can position each either way.

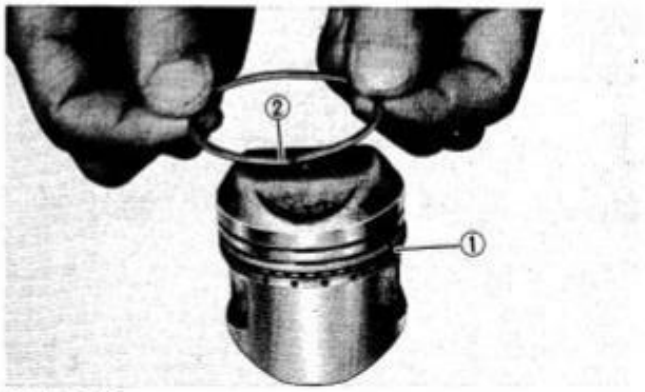

Fig. 2-148

CAUTION: If the spacer is of "N" type, be careful not to allow its two ends to overlap in the groove.

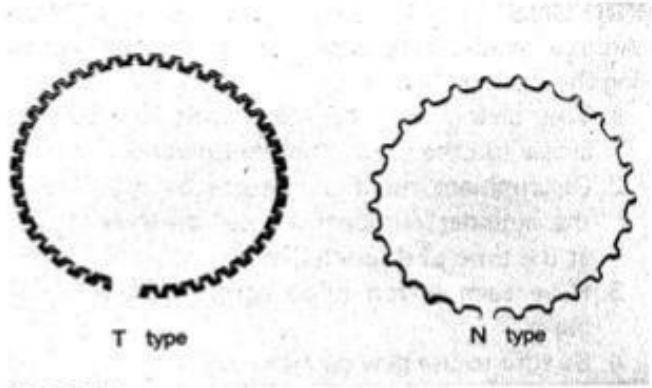

Fig. 2-149

Distribution of ring gaps

Distribute the gaps of the three rings as shown. Before inserting each piston into the cylinder, check to be sure that the gaps are so located.

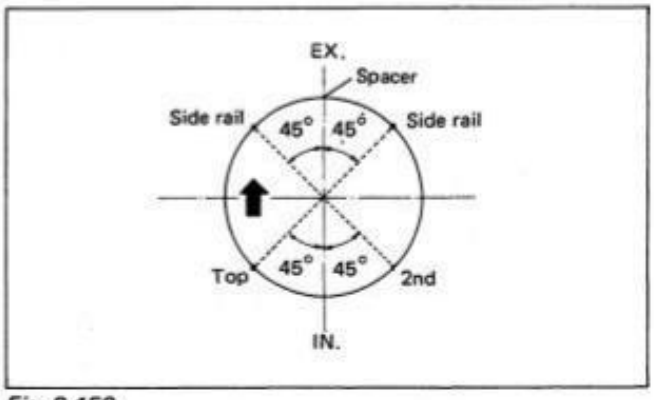

Fig. 2-150

CYLINDER BLOCK

1. Before putting on the cylinder block, oil the big and small ends of each connecting rod and also the sliding surface of each piston. Check to be sure that the "O" rings, ① and ②, are accurately positioned in the groove.

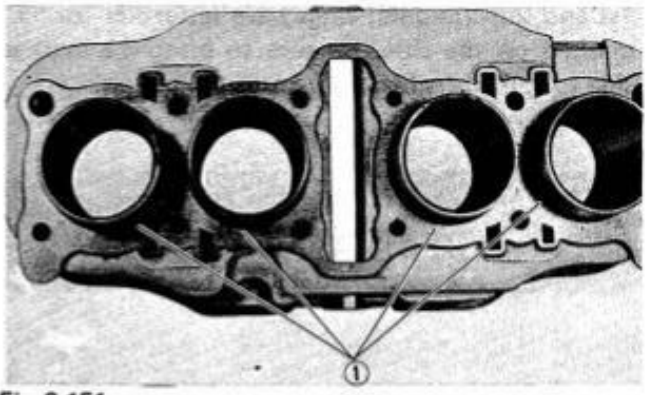

Fig. 2-151

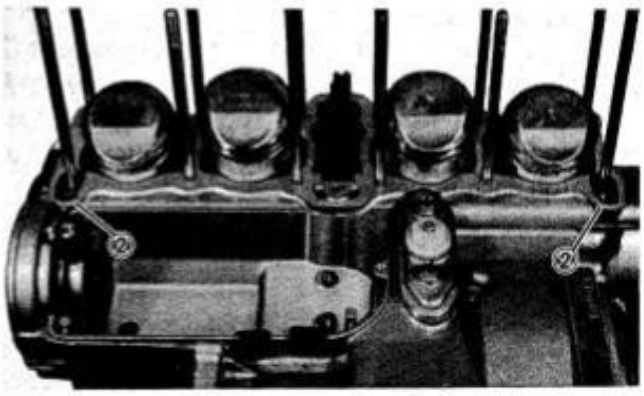

Fig. 2-152

2. Have the ring gaps set as shown in Fig. 2-150 on No. 2 and No. 3 pistons, and then install piston ring compressor (special tool) in the indicated manner. Some light resistance must be overcome to lower the cylinder block.

09916-74520	Holder body
09916-74531	Band (55-65 mm bore)

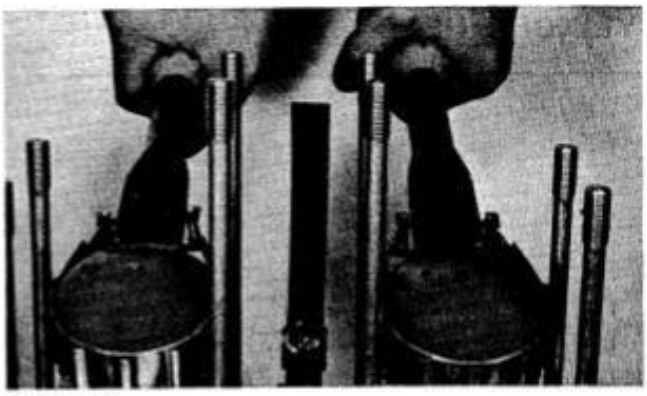

Fig. 2-153

NOTE: 1. Do not overtighten the special tool bands or the cylinders will resist to admit the pistons.
2. Each band has a number punch marked on it. The number refers to a particular range of piston sizes.

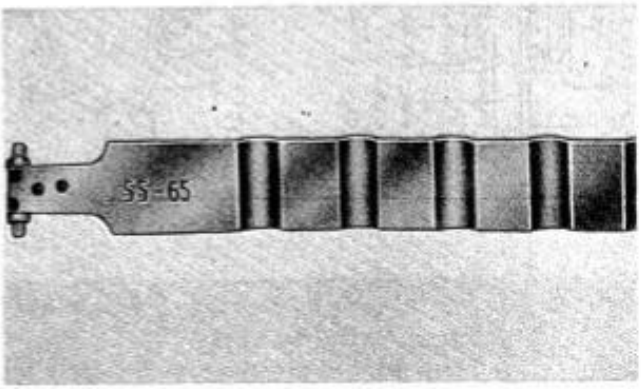

Fig. 2-154

3. With No. 2 and No. 3 pistons in place, install No. 1 and No. 4 pistons and insert them into the cylinder.

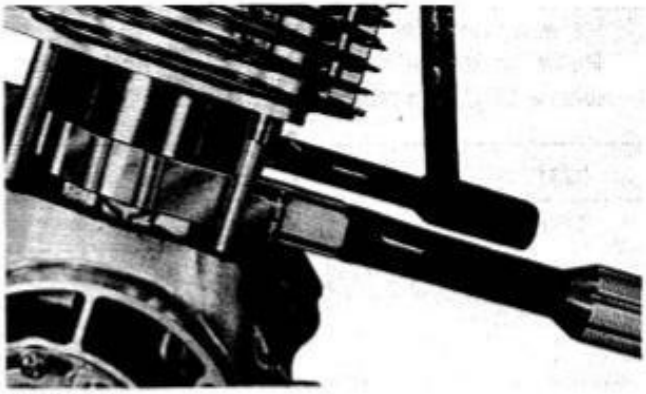

Fig. 2-155

NOTE: To rotate the crankshaft, hold down the timing chain with one hand and torque the shaft in normal running direction with the other hand, using a 19-mm wrench.

CYLINDER HEAD

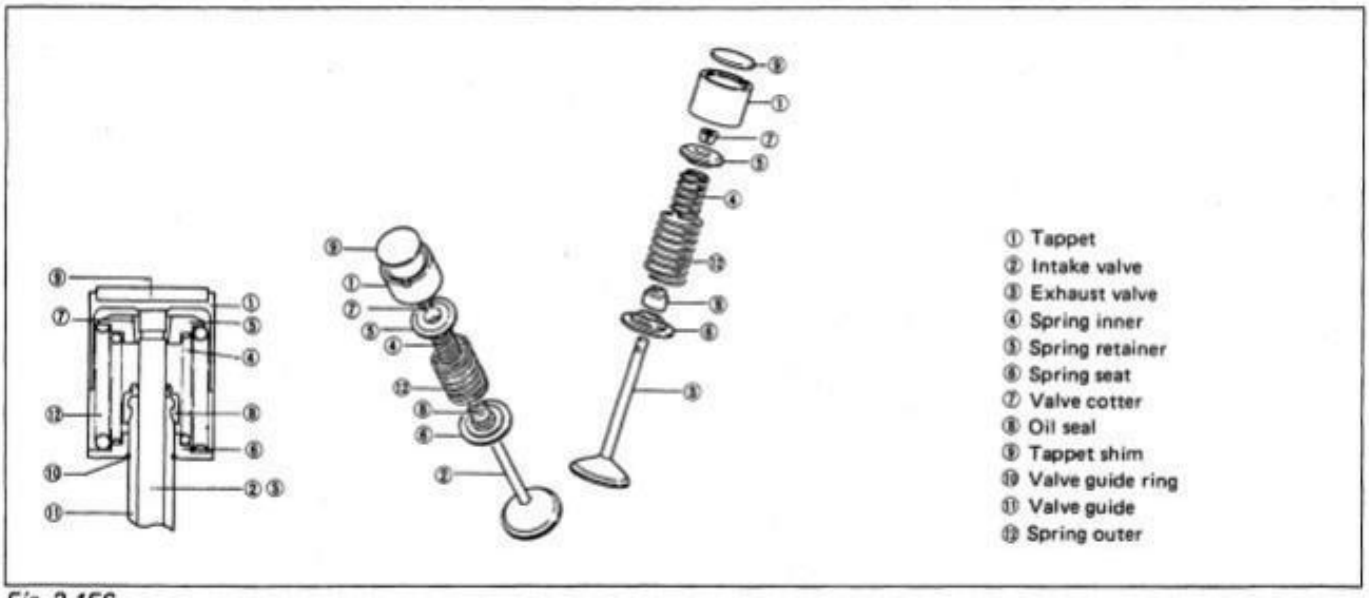

Fig. 2-156

NOTE: 1. When re-using the removed parts of valve mechanism, be sure to restore each to the position from which it was removed in disassembly.
2. For normal reassembling work, steps 1 through 5 of the following procedure are not required. These excluded steps are necessary only when valve guides had to be removed for replacement.

1. Valve guide hole reaming:
Re-finish the valve guide holes in cylinder head with a 12.3 mm reamer and handle.

09916-34531	12.3 mm reamer
09916-34541	Handle

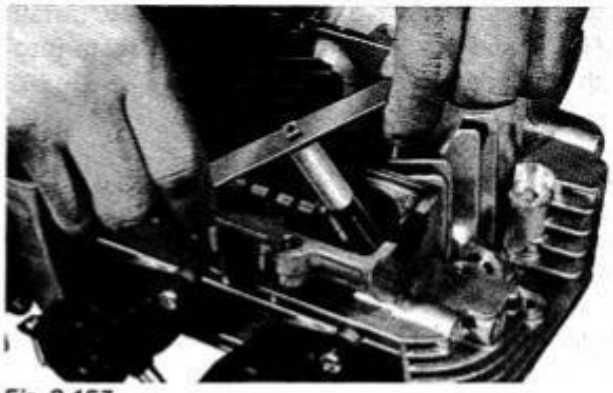

Fig. 2-157

2. Installing valve guide:
Fit a ring to each valve guide. Be sure to use new rings and valve guides. Use of rings and valve guides removed in disassembly is prohibited. Bear in mind that the guide for intake valve differs in shape from that for exhaust valve.

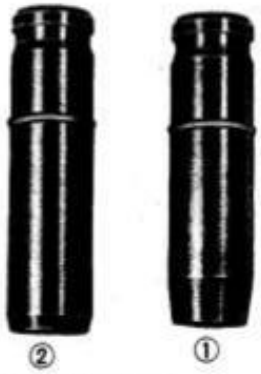

Fig. 2-158 ① Intake, ② Exhaust

NOTE: The valve guide of GS550 differs from that of GS750 and GS400 in that its ring groove is located slightly lower, as shown. Bear in mind that, as far as valve guide is concerned, there is no interchangeability between GS550 and GS750/400.

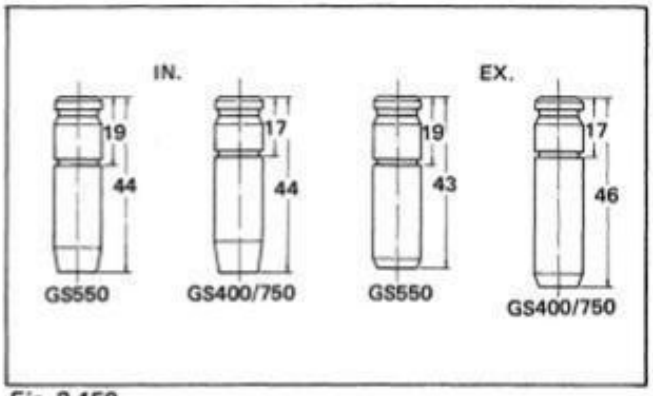

Fig. 2-159

3. Oil the stem hole, too, of each valve guide and drive the guide into the guide hole with the valve guide installer handle and attachment.

09916-57320	Valve guide installer handle
09916-54530	Attachment

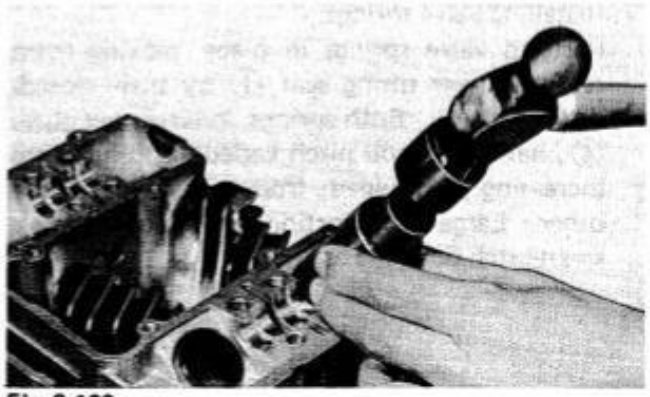

Fig. 2-160

4. Install valve spring lower seats. Be careful not to confuse the lower seats with the valve spring retainer.

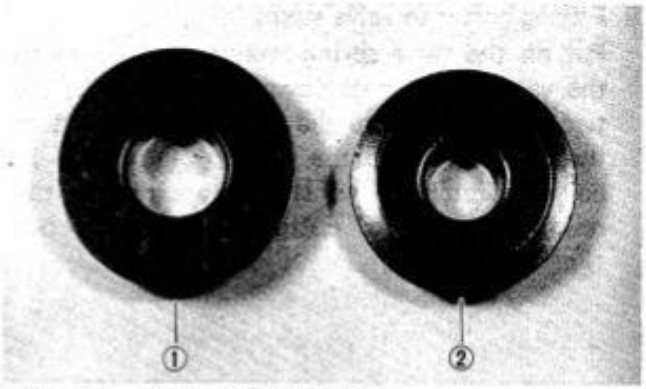

Fig. 2-161 ① *Seat,* ② *Retainer*

5. Fitting oil seal:
   Oil each oil seal, and drive it into position by using the valve guide installer handle and attachment.

NOTE: Do not reuse the oil seals removed in disassembly: use replacement seals.

09916-57320	Valve guide installer handle
09911-94710	Attachment

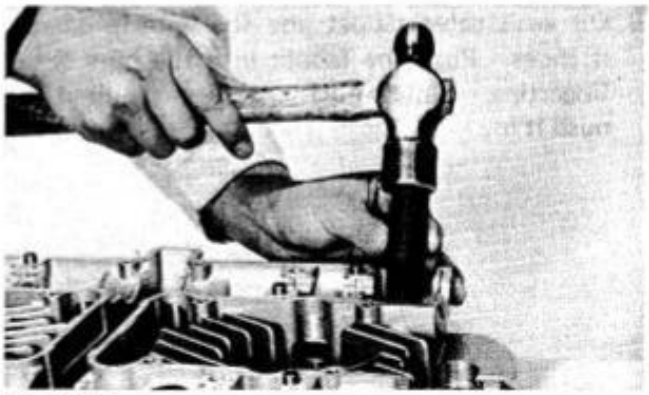

Fig. 2-162

6. Installing valve:
   Insert the valves, with their stems coated with a high quality molybdenum disulfide lubricant (SUZUKI MOLY PASTE) all around and along the full stem length without any break. Have the lip (of stem seal) similarly oiled.

CAUTION: When inserting each valve, take care not to damage the lip of its stem seal.

99000-25140	SUZUKI Moly paste

Fig. 2-163

7. Installing valve springs:
   Position valve springs in place, making them rest on lower spring seat ① by their closed-pitch ends ②. Both springs, inner ③ and outer ④, have their coil pitch varied: coil turns are increasingly crowded from one end to the other. Large-pitch portions are indicated as ⑤: small-pitch portions as ⑥.

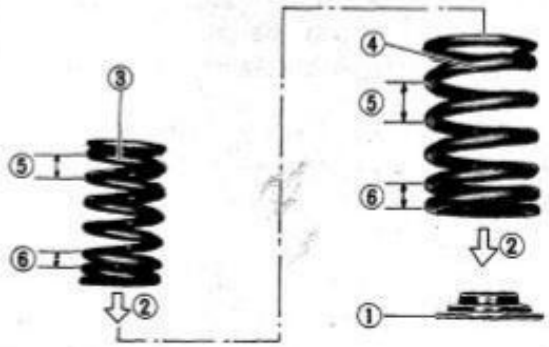

Fig. 2-164

8. Fitting cotter to valve stem:
   Put on the valve spring retainer and, by using the valve lifter, press down the springs, fit the two cotter halves to the stem end, and release the lifter to let the cotter ① wedge in between retainer and stem. Be sure that the rounded lip ② of cotter snugly fits groove ③ in stem end.

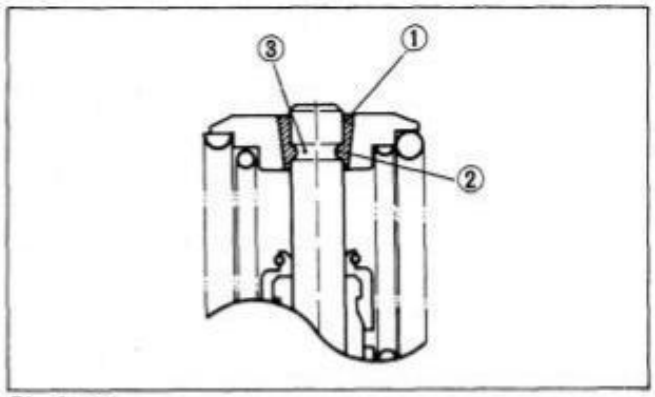

Fig. 2-165

9. Oil each valve tappet and the bore in which it slides. Push the tappet into the bore with fingertips. Only a light force is required to push it in.

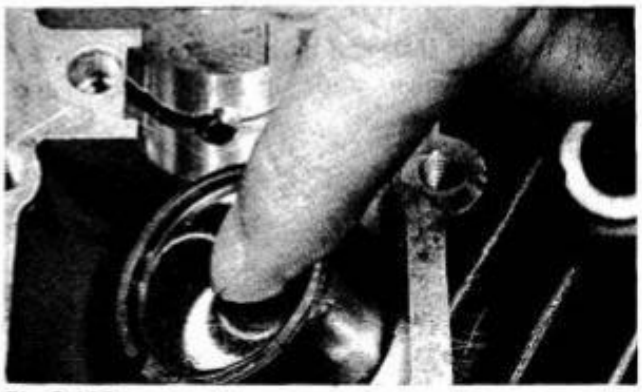

Fig. 2-166

Mounting cylinder head

Having thus installed the intake and exhaust valves in the cylinder head, mount the head on the cylinder block as follows:

1. Install the new cylinder head gasket.
2. Install the four crown nuts and copper washers in the positions Ⓐ (oil passages) indicated.

Fig. 2-167

3. With the head snugly seated on the cylinder block, secure it by tightening the twelve 8-mm nuts sequentially in the ascending order of numbers. Tighten each nut just a little at a time and shift the wrench in the indicated order to reach the same final torque value specified.

Cylinder head nut tightening torque	2.3 - 2.7 kg-m (16.5 - 19.5 lb-ft)

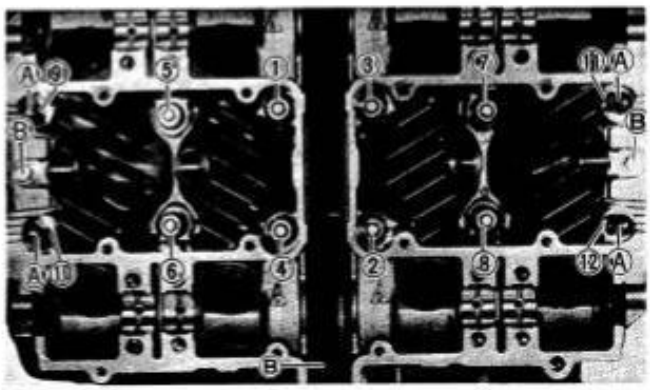

Fig. 2-168

After tightening the 12 nuts good and hard, run in three 6-mm bolts (indicated as Ⓑ) and tighten them to this torque value:

Head bolt tightening torque	0.7 - 1.1 kg-m (5.0 - 8.0 lb-ft)

NOTE: Use the wrench (special tool) ① and a torque wrench ② to tighten cylinder head nuts, as shown.

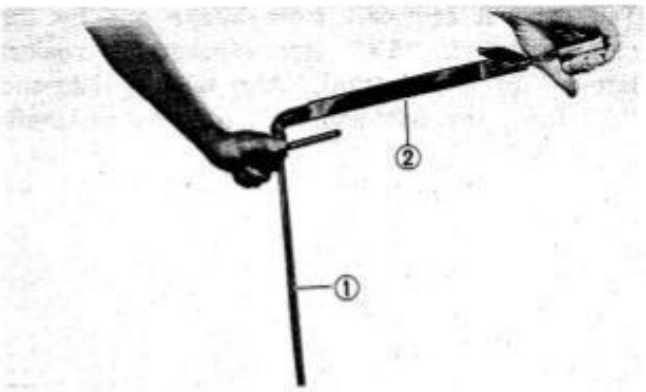

Fig. 2-169

CAMSHAFTS

Mounting sprockets on camshafts

Exhaust camshaft takes its own sprocket, and intake camshaft does similarly. Do not confuse the two sprockets.

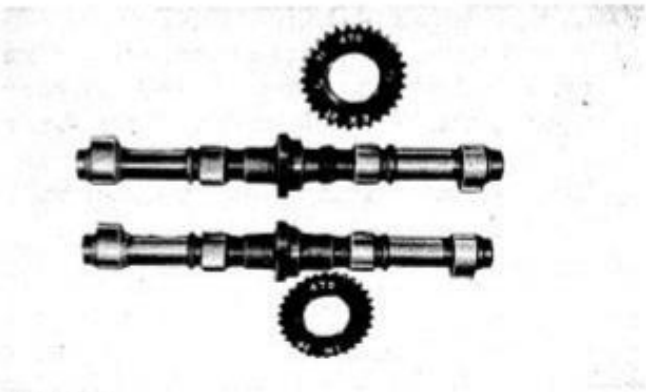

Fig. 2-170

It is highly important that each sprocket be positioned angularly on its camshaft as illustrated. Its correct position is determined by arrow mark "3" (on INTAKE sprocket) or arrow marks "1" and "2" (on EXHAUST sprocket) located (as shown) in reference to the notch ① in the camshaft end.

Apply THREAD LOCK SUPER "1333B" to the threads of Allen-head bolts, and tighten them to this torque value:

99000-32020	Thread lock super "1333B"

Sprocket bolt tightening torque	1.0 kg-m (7.0 lb-ft)

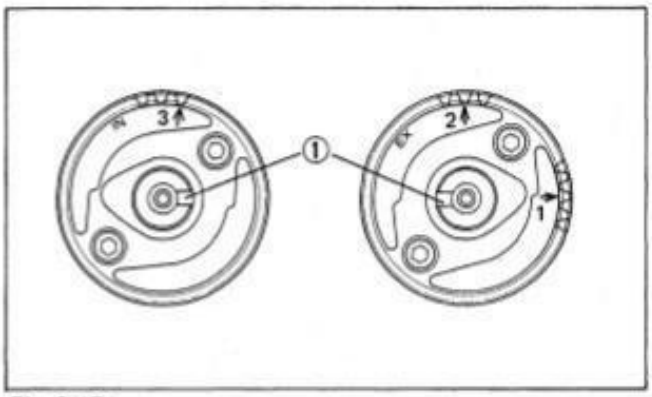

Fig. 2-171

Positioning camshaft in place

NOTE: Just before placing the camshaft on the cylinder head, apply a high quality molybdenum disulfide lubricant (SUZUKI MOLY PASTE: 99000-25140) to its journals, coating each journal with the paste fully without leaving any dry spot. Apply engine oil to the journal holders.

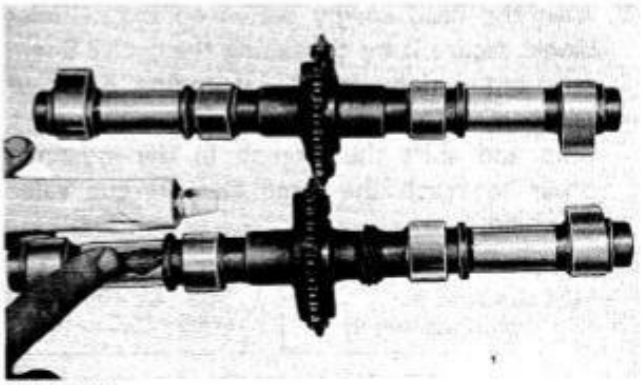
Fig. 2-172

Tell exhaust camshaft from intake one by the cast-out letters "EX" (for exhaust) as against letters "IN" (for intake). Also tell the right end "R" from the left end "L" of each camshaft.

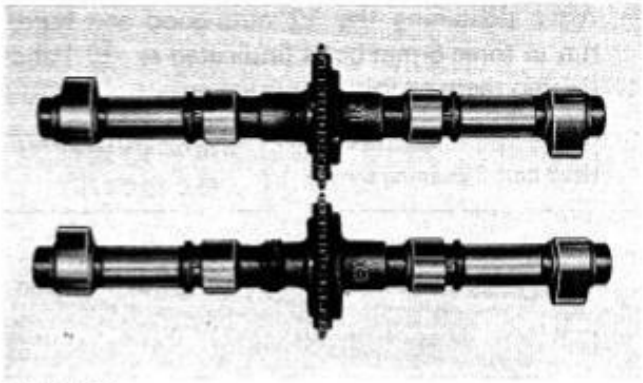
Fig. 2-173

VALVE TIMING ADJUSTMENT

1. While holding down the timing chain, rotate the crankshaft in normal running direction to bring the "T" mark on Nos. 1 and 4 side (of the advance governor) to the timing mark. Use a 19-mm wrench to turn the crankshaft.

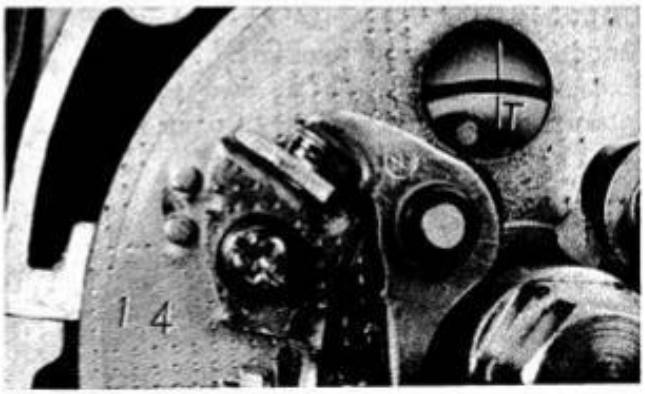

Fig. 2-174

CAUTION: To turn over crankshaft, torque nut ① with a 19 mm wrench. Never try to rotate crankshaft by putting a 12 mm wrench to bolt ②.

Fig. 2-175

2. With "T" mark sharply indexed to the timing mark, hold the crankshaft steady and lightly pull up the chain to take up the sag between crank sprocket and exhaust sprocket.

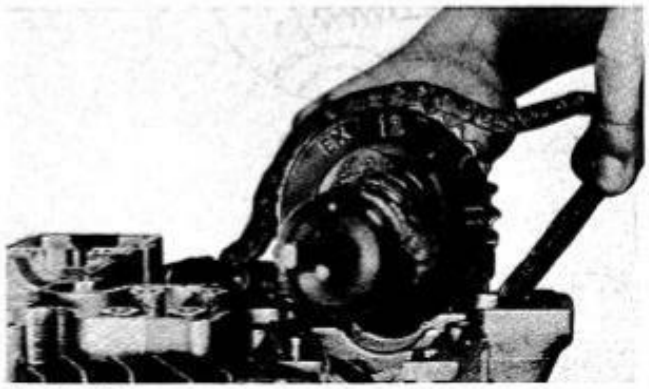

Fig. 2-176

3. Exhaust sprocket has an arrow mark "1" indicated as ①. Turn over exhaust camshaft to point this arrow flush with the joint surface of the cylinder head. Engage the timing chain with this sprocket.

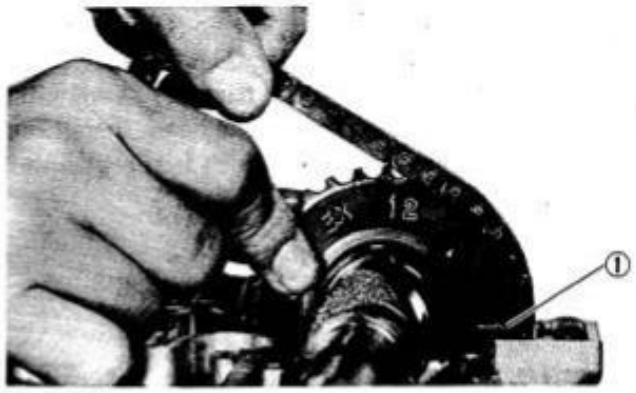

Fig. 2-177

4. The other arrow mark "2" is now pointing straight upward. Count the chain roller pins toward intake camshaft, starting from the roller pin right above this arrow mark "2" and ending with the 20th roller pin. Engage the chain with intake sprocket, locating the 20th pin at and above the arrow mark "3" on intake sprocket.

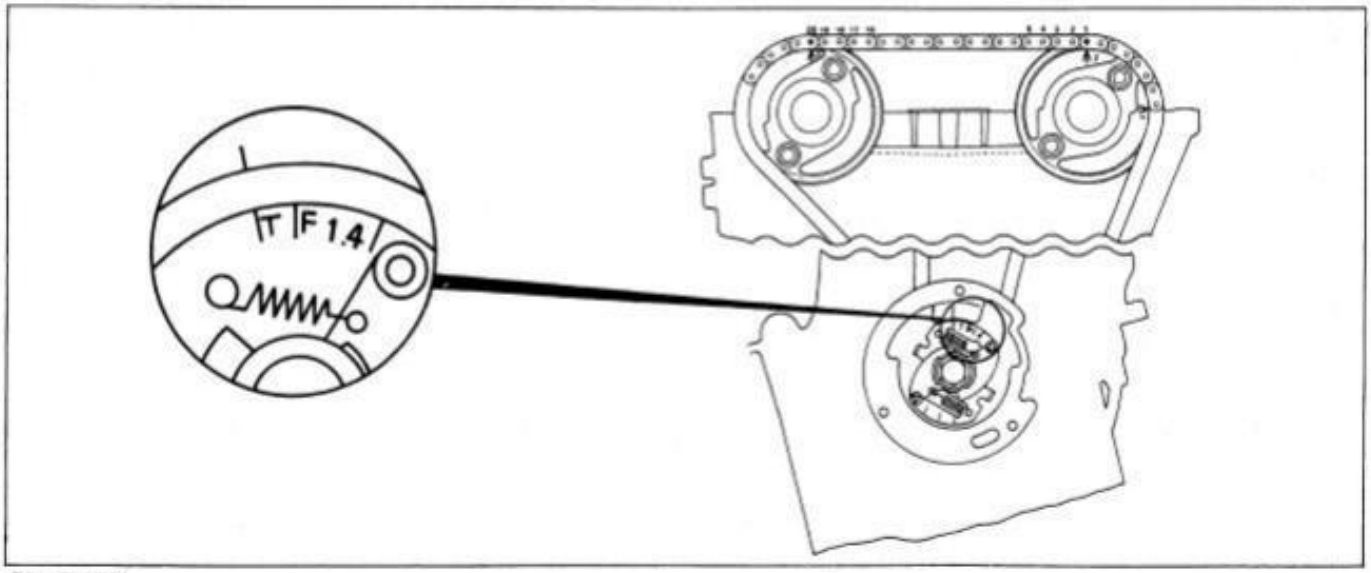

Fig. 2-178

NOTE: The timing chain is now riding on all three sprockets. Be careful not to disturb the crankshaft until four bearing caps are secured.

Installing bearing holder

Each camshaft bearing holder ① is identified with a cast-on letter ② within a triangle. A matching cast-on symbol ③ appears on the head. Install each holder at its' matching letter, with triangle symbols pointing the same way.

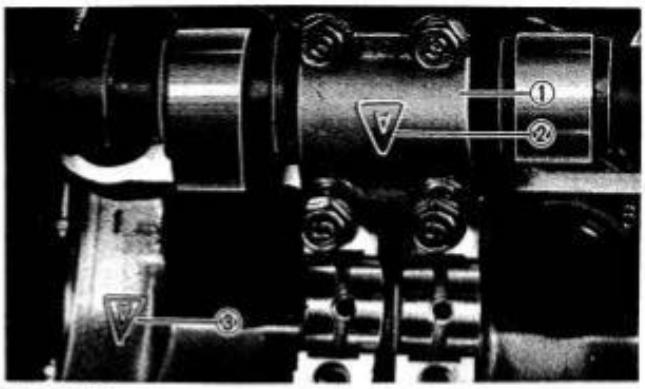

Fig. 2-179

Secure the four bearing holders uniformly by tightening holder bolts sequentially in the manner illustrated. Try to equalize the securing pressure by moving the wrench diagonally from one bolt to another and from one bearing holder to another. (It is assumed here that the vice pliers ① are used for each camshaft to hold down the tappet interfering with a cam.)

Tighten the cap bolts (identified by the letter "9" on the bolt head) to specified torque value:

Holder bolt tightening torque	0.8 - 1.2 kg-m (6.0 - 8.5 lb-ft)

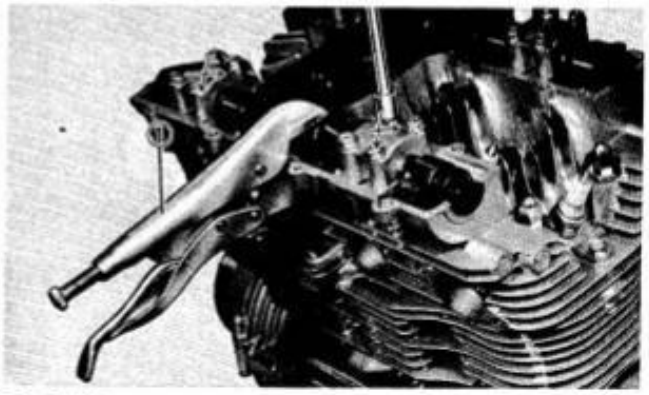

Fig. 2-180

CAM CHAIN TENSIONER ADJUSTER

The tension adjuster used in the Model GS550 is of automatic type in that it adjusts itself to apply a constant tensioning force to the chain by compensating for the stretch of the chain.

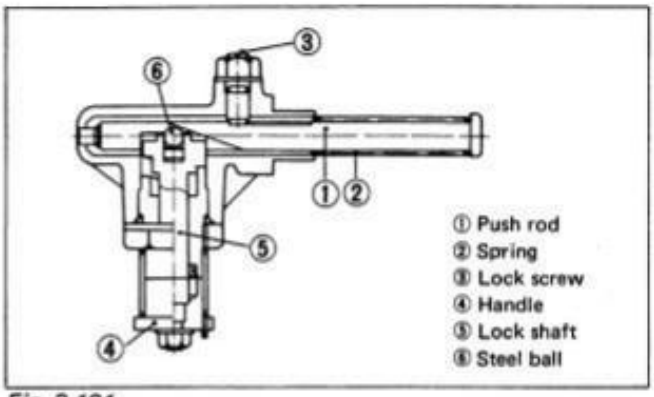

Fig. 2-181

In operation, the running chain shakes more or less, tending to allow the spring-urged push rod to move in and out. This tendency is countered by preventing push rod from backing away by means of steel ball and lock shaft.
Steel ball bears against the sloped face of push rod. Lock shaft is preloaded with spring and keeps ball in contact with push rod by the action of this spring and the tapered contact between lock shaft body and shaft. Thus, ball is capable of moving forward (in the direction of the arrow) but not backward.

Reassembling

1. Apply a high quality molybdenum disulfide lubricant (SUZUKI MOLY PASTE) to the pushrod and engine oil to the pushrod guide hole. Match the lock screw ① to the long groove ② in the pushrod, as shown, and insert the pushrod by pushing it to the indicated position.

99000-25140	SUZUKI Moly paste

Fig. 2-182

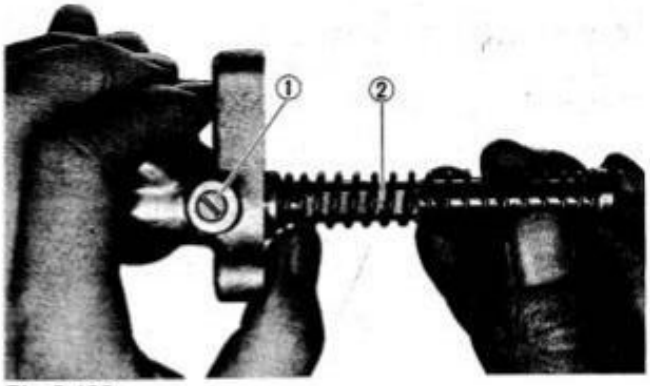

Fig. 2-183

2) While turning the handle counter clockwise, move the pushrod back and forth with fingers to see if it moves smoothly as it should.

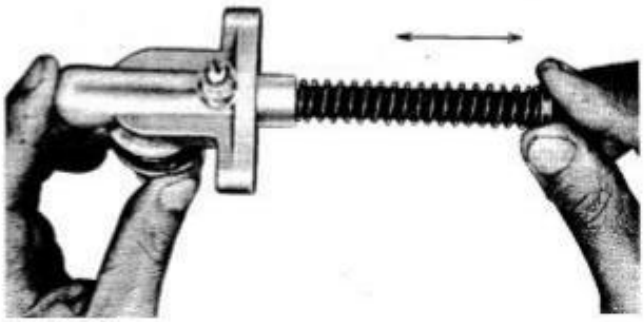
Fig. 2-184

Installing the adjuster

Removal of the tension adjuster is necessitated by engine disassmbly and also by removal of camshafts. In either case, re-install the adjuster on the cylinder block after the camshaft have been installed. The procedure follows:

1. While turning lock shaft handle **counter-clockwise,** push in the pushrod all the way. Keep on turning the handle until it refuses to turn further.

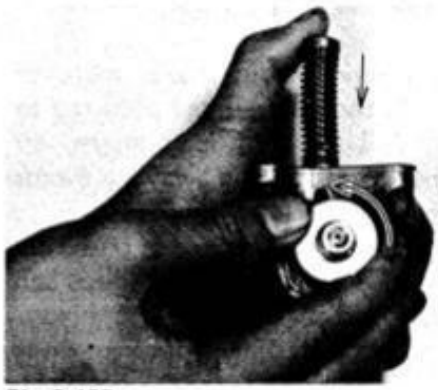

Fig. 2-185

2. Tighten the lock screw to lock the pushrod, so that the pushrod will not plunge out.

3. Secure the adjuster to the cylinder block.

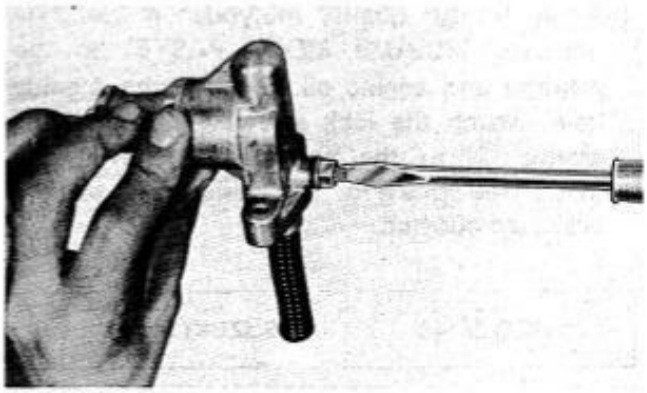

Fig. 2-186

4. Back away the lock screw by one-quarter to half rotation: this separates the tip of this screw from the pushrod, thereby allowing the pushrod to advance under spring force and press the tensioner against the timing chain.

Fig. 2-187

5. Tighten the lock nut.

NOTE: When tightening the lock nut, be careful not to allow the lock screw to turn.

Fig. 2-188

Tensioning action check

After installing the tensioner, check it for tensioning action according to the 3-step procedure, which follows:

CAUTION: As stated previously, do not attempt to turn over crankshaft by torquing bolt ② (which calls for a 12-mm wrench): torque nut ① with a 19-mm wrench, instead.

Fig. 2-189

1. While turning the handle ① counterclockwise, slowly rotate the crankshaft in **reverse** direction (thus causing the chain to push back the tensioner).

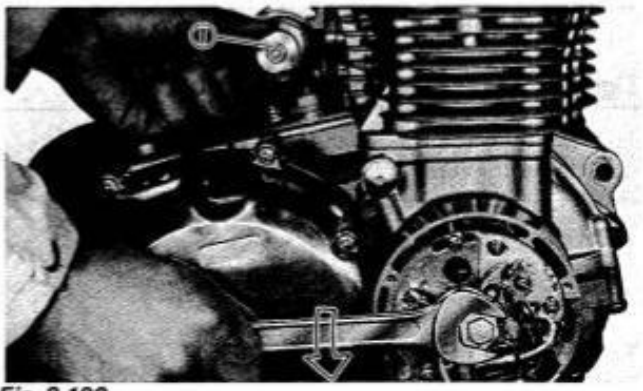

Fig. 2-190

2. Release the handle and slowly turn back the crankshaft in **normal turning direction** (to slacken that portion of the chain extending along the tensioner). See if the handle rotates by itself as the chain becames increasingly slackened; if it does, then the pushrod inside is obviously moving forward under spring force as it should, thus signifying that the tensioner is in good operable condition. If the handle rotates but sluggishly, it means that the pushrod or lock shaft is sticking and, in such a case, remove the tensioner and service the pushrod and lock shaft to make them move smoothly.

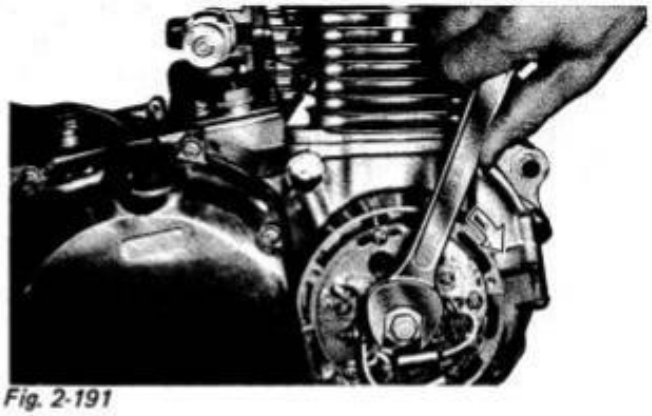

Fig. 2-191

CAUTION: After installing the tensioner and checking it in initially set condition for operation, do not attempt to turn the handle in either direction until the next overhaul.

Tappet clearance check

After checking tensioning action, check all valves for tappet clearance and, as necessary, adjust the clearance to the specification as outlined in page 75.

CYLINDER HEAD COVER

Install four oil separators at the locations indicated.

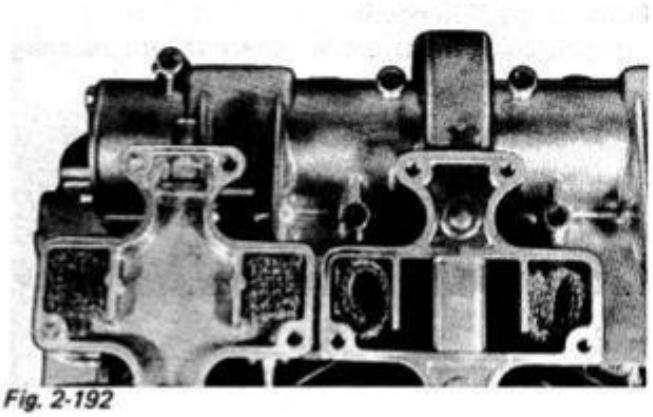

Fig. 2-192

There are 16 bolts for securing the cover to the head. Tighten these bolts so as to make sure that it will be fastened down with evenly distributed pressure.

Tighten the bolts to this torque value:

Head cover bolt tightening torque	0.7 - 1.1 kg-m (5.0 - 8.0 lb-ft)

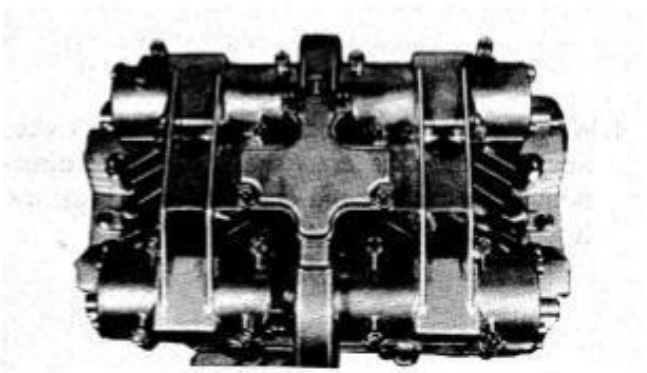

Fig. 2-193

TACHOMETER DRIVE GEAR

Insert this gear after installing the cylinder head cover.

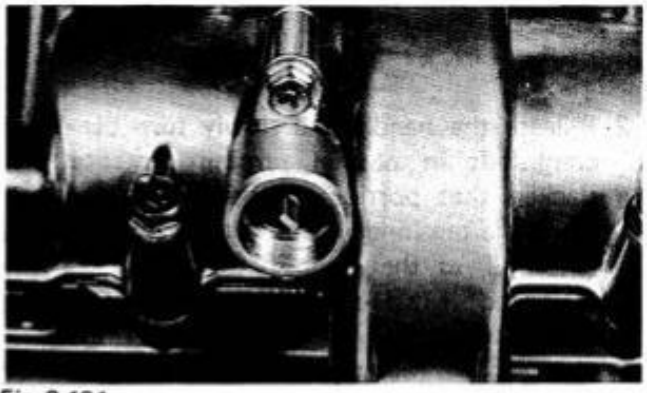

Fig. 2-194

CARBURETORS

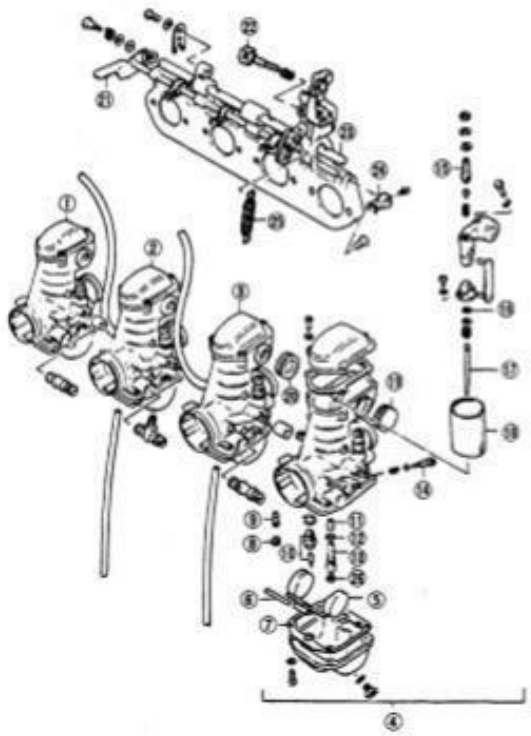

① No. 1 carburetor ass'y
② No. 2 carburetor ass'y
③ No. 3 carburetor ass'y
④ No. 4 carburetor ass'y
⑤ Float
⑥ Float pin
⑦ Gasket
⑧ Pilot jet No. 2
⑨ Pilot jet No. 1
⑩ Needle valve
⑪ Needle jet
⑫ O ring
⑬ Breader pipe
⑭ Adjuster
⑮ Adjuster
⑯ Needle clip
⑰ Jet needle
⑱ Throttle valve
⑲ Cap
⑳ Seal
㉑ Starter shaft
㉒ Throttle stop adjuster
㉓ Throttle shaft
㉔ Starter lever
㉕ Throttle return spring
㉖ Main jet

Fig. 2-195

1. Carburetor identification
   Be sure to identify each carburetor for the cylinder which it serves, and to mount each in the correct position indicated:

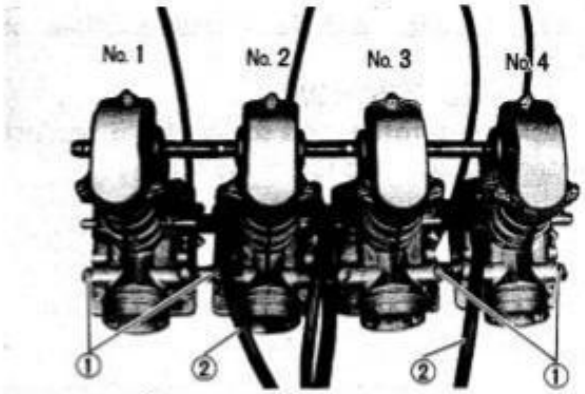

Fig. 2-196 ①*Air screw,* ②*Air vent hose*

2. Grease throttle shaft, and install it in the carburetor in greased condition. Leave the throttle shaft screw loose.

99000-25010	SUZUKI super grease A

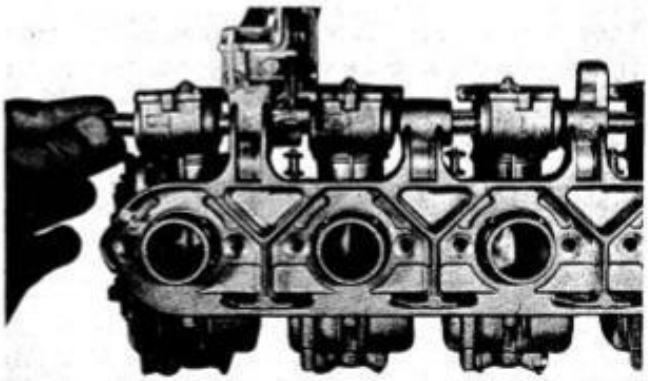

Fig. 2-197

3. Secure the plate by tightening 8 screws. Be sure to apply THREAD LOCK CEMENT to these screws before running them in.

99000-32040	Thread lock cement

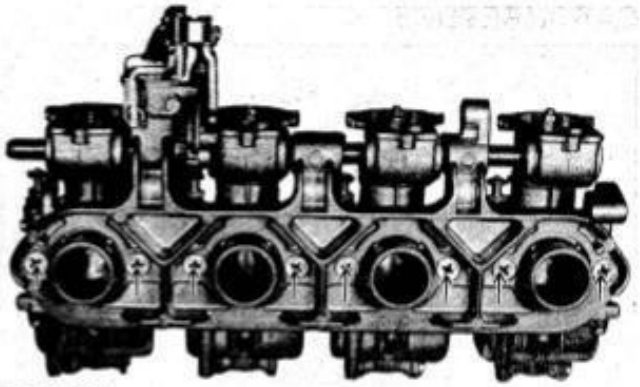

Fig. 2-198

4. Tighten the bolt ① to this torque value:

Bolt ① tightening torque	0.35 kg-m (2.5 lb-ft)

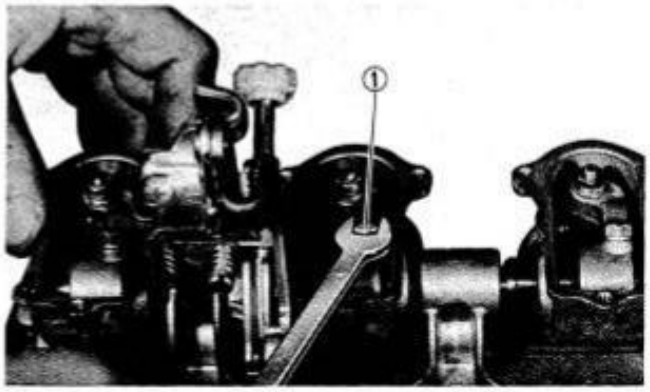

Fig. 2-199

Adjusting full-open and full-closed positions of throttle valves

FULL-CLOSED POSITION

Run back the throttle stop screw ① to produce a clearance between the screw and pulley.

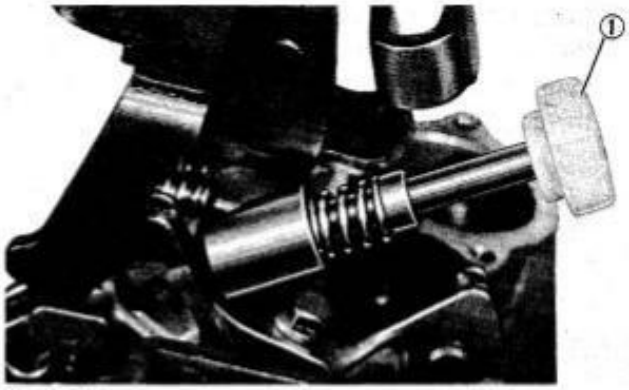

Fig. 2-200

Loosen lock nut. Turn throttle adjusting screw ① to close the throttle valve fully, and tighten the lock nut ② to secure the screw in that position. Carry out this step equally on all four carburetors.

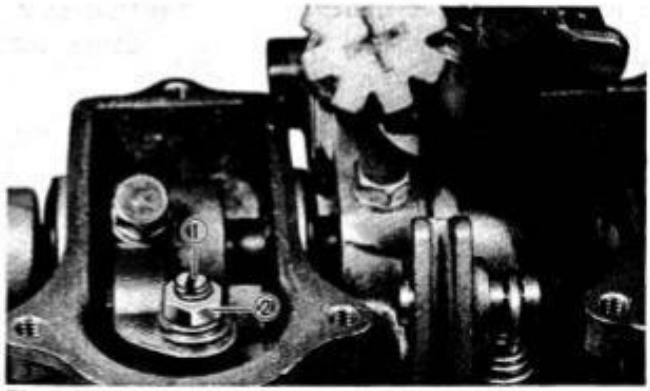

Fig. 2-201

FULL-OPEN POSITION

Adjust the full-throttle stopper ① in such a way that, when the throttle valve is turned to its full-open position, the valve will come to the position indicated.

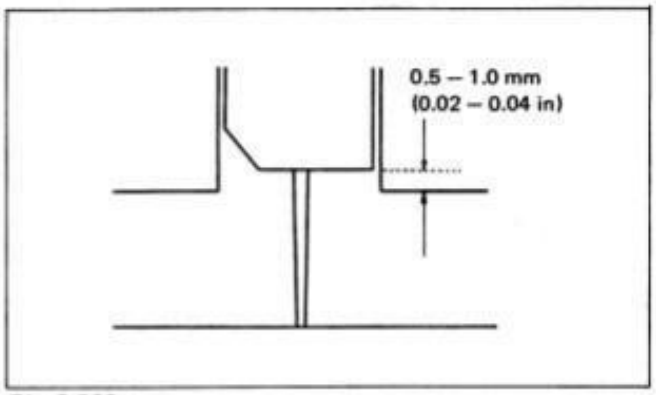

Fig. 2-202

Fig. 2-203

ENGINE REMOUNTING

The sequence of remounting steps is generally the reverse of the removal sequence, but there are several important steps which need comments, explanations or emphasis. Those steps will be taken up in the following:

ENGINE MOUNTING BOLTS

1. Three of the mounting bolts are longer than the others. Insert the long bolts from the left side of the engine.

Tightening torque for engine mounting bolts	
10 mm Dia	4.0 kg-m (29.0 lb-ft)
8 mm Dia	2.0 kg-m (14.5 lb-ft)

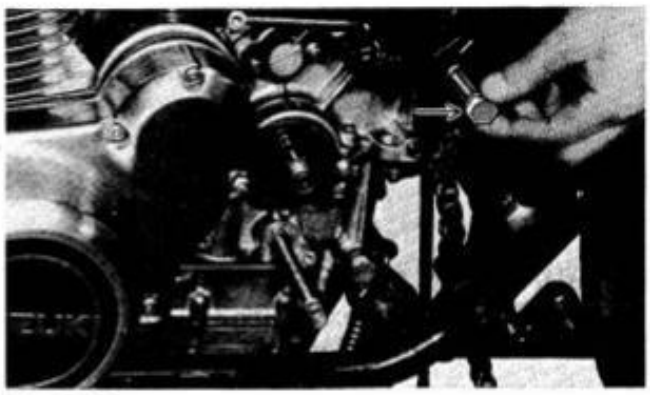

Fig. 2-204

2. The nut ① takes its position in the place indicated.

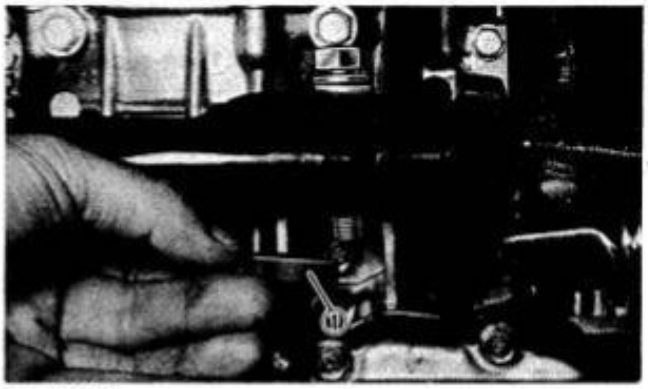

Fig. 2-205

HIGH-TENSION CORDS

Each high-tension cord is labeled to indicate the cylinder it serves. If these labels are missing, be guided by the photos to connect the respective cords.

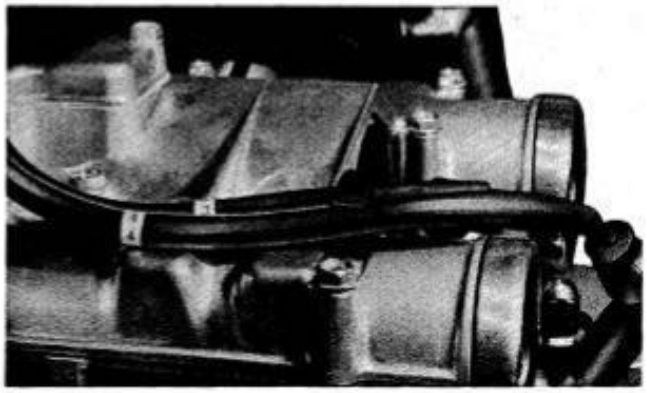

Fig. 2-206

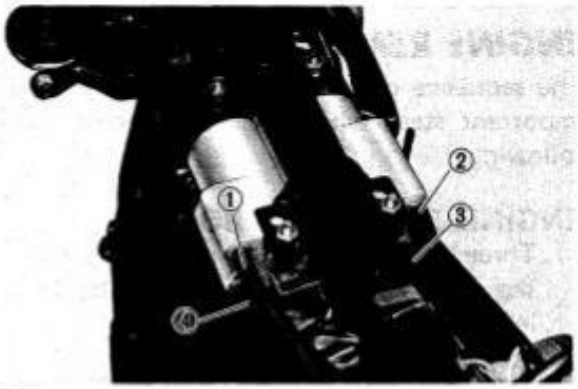

Fig. 2-207

CARBURETOR AIR VENT PIPE

The two air vent pipes extending from Nos. 2 and 4 carburetors should be led at the indicated place.

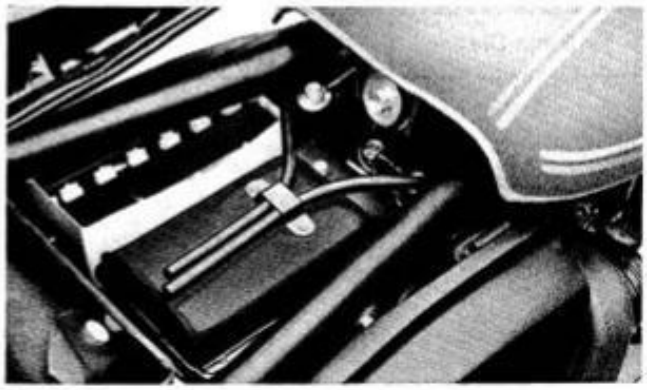

Fig. 2-208

CARBURETOR OVERFLOW PIPE

The four overflow pipes should be clamped at the indicated place. After so clamping them, pass them through the clearance between swing arm and transmission.

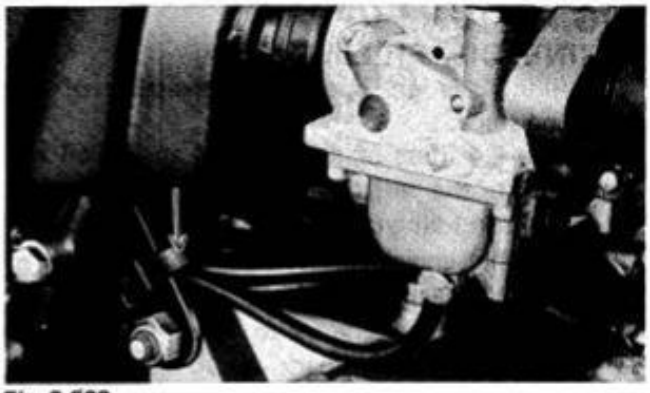

Fig. 2-209

OIL DRAIN PIPE FOR AIR CLEANER

Pass this pipe through the clearance between swing arm and transmission.

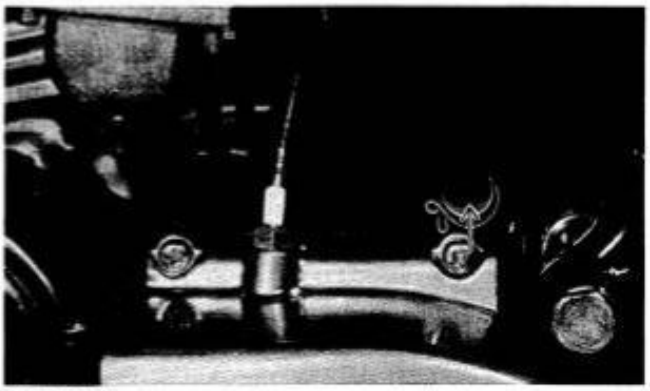

Fig. 2-210

BREATHER PIPE FOR CRANKCASE

Install this pipe, connecting it to the air cleaner case and to the cylinder head, as shown.

Fig. 2-211

ENGINE TUNE UP

ENGINE OIL FILLING

"Oil filling" is an operation consisting of the following steps:

1. **Fill in 2.4 liters of the specifed engine oil and start up the engine to run it for about 10 seconds in idling condition.**
2. Stop the engine and, after one minute of stopping, check oil level.
3. Add oil, as necessary, to raise the level to "F" mark. ① : "F" mark
   ② : "L" mark

Fig. 2-212

THROTTLE CABLE ADJUSTMENT

After installing the throttle cables, set the two adjusters ①, to obtain a play of 0.5–1.0 mm (0.02–0.04 in) as measured at the indicated place.

② : Pull-side wire
③ : Return-side wire

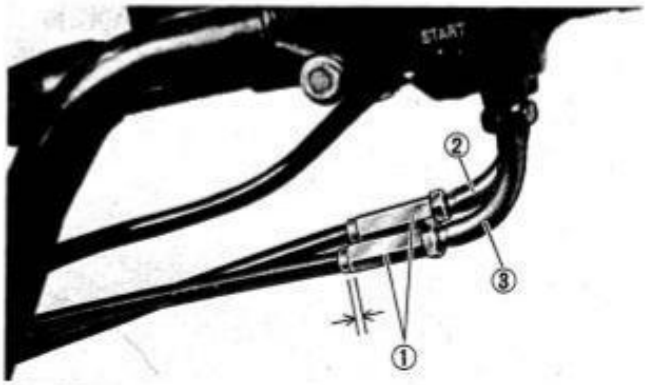

Fig. 2-213

CLUTCH CABLE ADJUSTMENT

1. Loosen lock nut ① and reposition adjuster ② in place to introduce a necessary amount of play for the clutch lever.

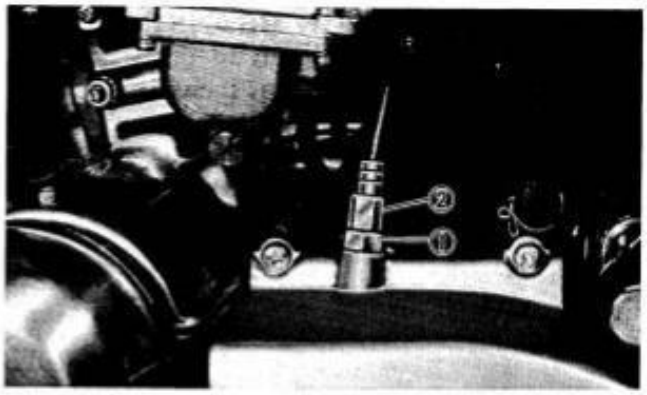

Fig. 2-214

2. Loosen lock nut ③ , and back adjusting screw ④ away two to three rotations.

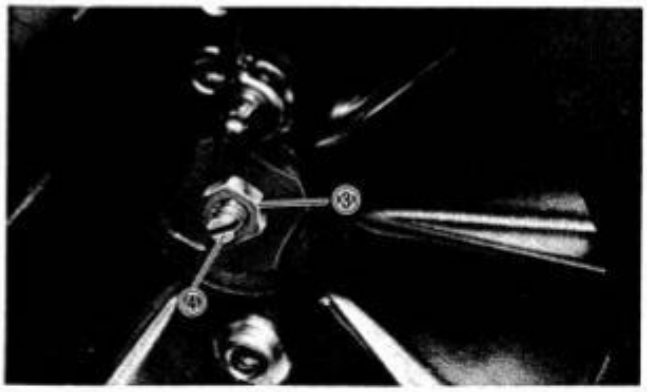

Fig. 2-215

3. From that position of adjusting screw, slowly run it in until it begins to offer high resistance to turning. From this position, back it away ¼ – ½ rotation, and sucure it by tightening lock nut.

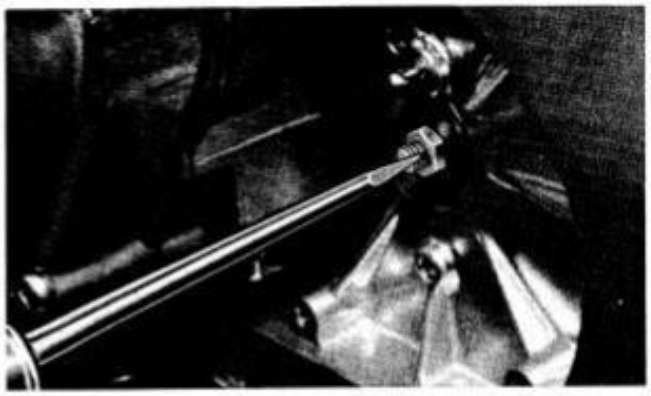

Fig. 2-216

4. Set the adjuster ② (shown in Fig. 2-214) to provide a clutch lever play ⑤ of 4 mm (0.16 in), and tighten the lock nut.

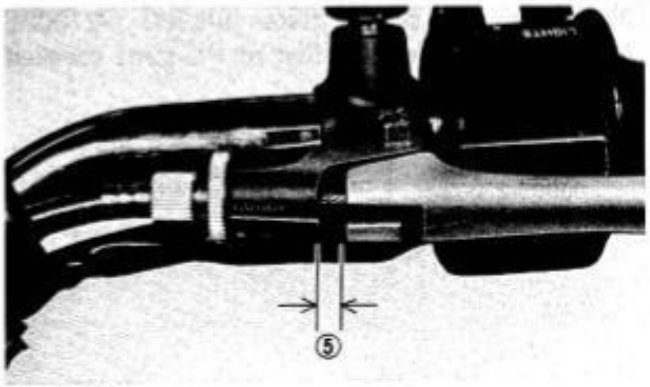

Fig. 2-217

IGNITION TIMING ADJUSTMENT

Ignition timing specifications

Point gap	0.3 - 0.4 mm (0.012 - 0.016 in)
Spark plug gap	0.6 - 0.8 mm (0.024 - 0.031 in)
Ignition timing	17° B.T.D.C. below 1 500 r/min and 37° B.T.D.C. above 2 500 r/min

CAUTION:
1. Be sure to use a 19-mm wrench to turn over crankshaft in the direction shown.
2. Have all four plugs removed until the adjustment is completed.

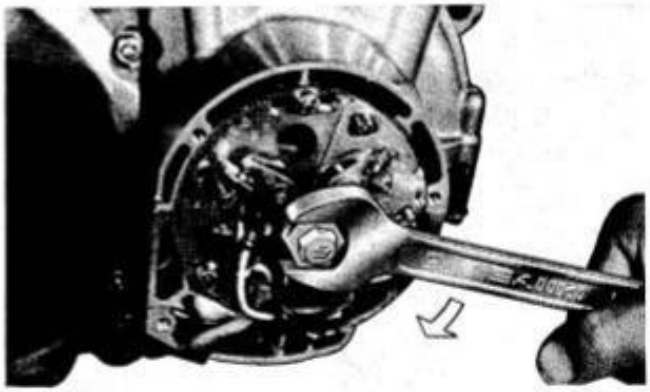

Fig. 2-218

Timing adjustment for Nos. 1 and 4 cylinders

1. Set the contact point gap ① to 0.35 mm in the Nos. 1-4 breaker. To adjust the gap, loosen screw ② and displace terminal ③.

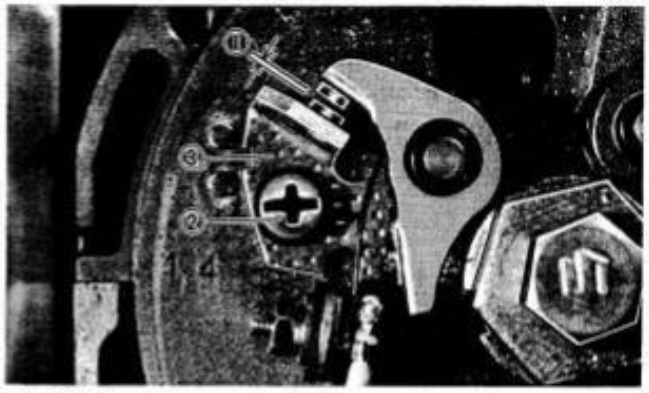

Fig. 2-219

2. Connect the timing tester (09900 - 27003) between the (+) terminal of the same breaker and ground.

09900-27003	Timing tester

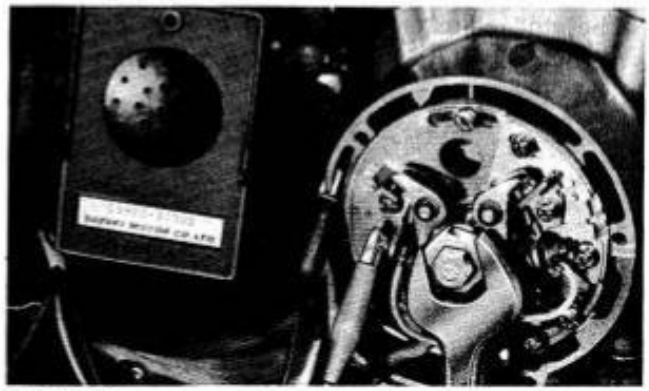

Fig. 2-220

3. Turn over crankshaft in normal running direction to index mark ② (on the Nos. 1-4 side of the advance governor) to timing mark ④.

①: Corresponding to T.D.C. of Nos. 1-4 pistons
②: Timing index mark
③: Ignition advance timing mark

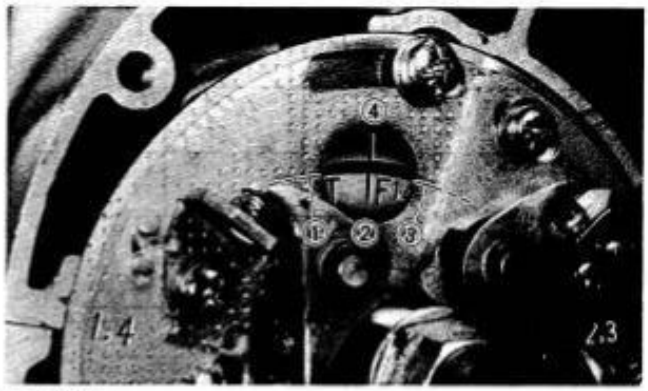

Fig. 2-221

4. With the pistons brought to the specified B.T.D.C. position in Nos. 1 and 4 cylinder, as above, loosen three screws ⑤ securing the breaker plate and turn the plate slowly counter-clockwise until the contact points begin to separate. Secure the plate in that position by tightening the screws ⑤.

5. To check, turn over crankshaft slowly while paying attention to the timing tester. If the breaker begins to open its contact just when mark ② comes into register with mark ④, then it means that the adjustment is correct and that the ignition is timed as specified for Nos. 1 and 4 cylinders.

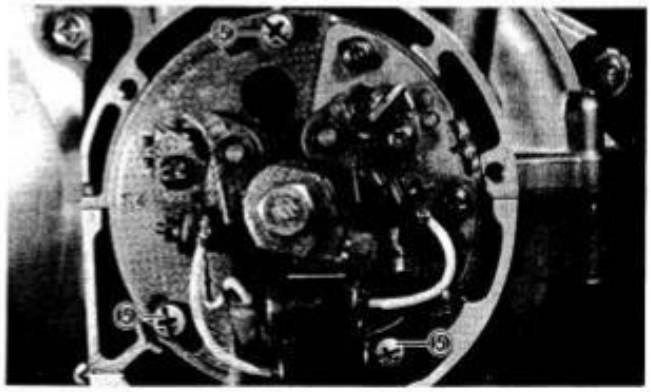

Fig. 2-222

Timing adjustment for Nos. 2 and 3 cylinders

The procedure is identical to the foregoing one except for two points:

1. Bring mark "F" (on Nos. 2-3 side in the advance governor) into register with the timing mark.

Fig. 2-223

2. Loosen two screws ① and move plate ② counterclockwise to determine its position for the beginning of opening action.

③: **Points gap adjusting screw for Nos. 2 and 3 cylinder.**

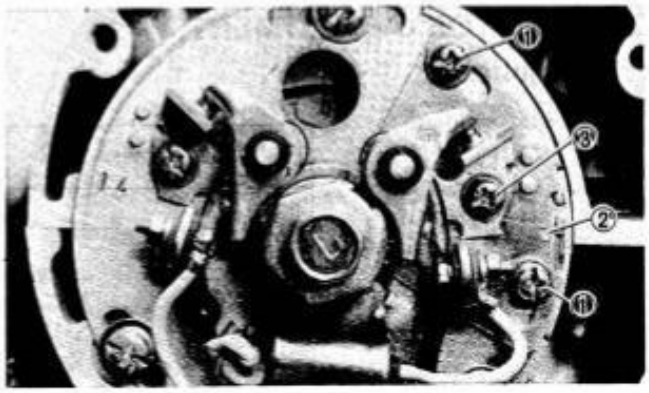

Fig. 2-224

Checking the ignition timing with the timing light

After setting the contact points of the twin breaker by adjusting in the above-described manner, check the performance of the timing mechanism by using the electro tester **(09900-28106)**. Illuminate the advance governor with the timing light of this tester and vary the engine speed to see if the ignition is correctly timed or not. Here's the procedure:

1. Run the engine in the speed range not exceeding **1 500 r/min. Under this condition, "F"** mark ① and timing mark ② should be in perfect alignment: if not, readjust the twin breaker in reference to these marks in the advance governor.

09900-28106	Timing tester

Fig. 2-225

2. Run the engine in the speed range above 2 500 r/min; and similarly observe the position of mark ③ relative to mark ④. If the two marks are in register, it means that the ignition is properly advanced.

3. Carry out the above steps 1. 2. for Nos. 2 and 3 cylinders.

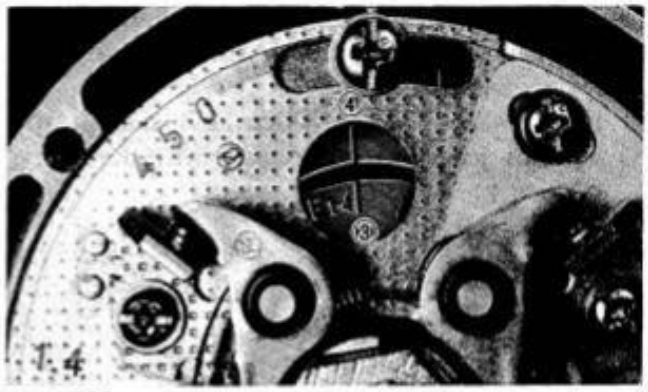

Fig. 2-226

CARBURETOR ADJUSTMENT

Idling adjustment

Idling speed	1 100 r/min
Air screw setting	Back off 2.0 turns from fully run-in position

NOTE: Make this adjustment when the engine is hot.

1. Run in the air screw of each carburetor all the way, taking care not to strip the screw threads by overtorquing it, and back it off 2.0 turns.

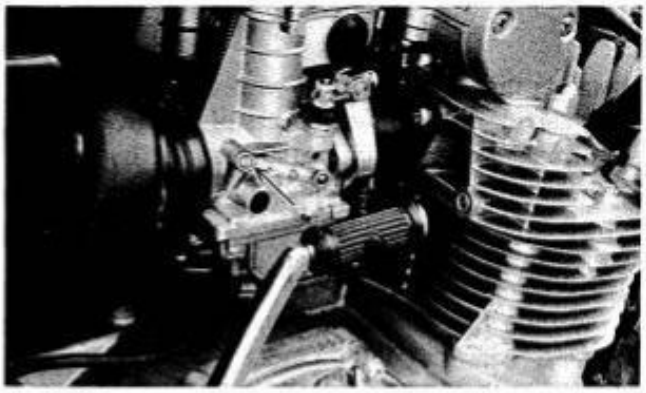

Fig. 2-227

Balancing carburetors

The four carburetors must be balanced after disassembling the engine or the carburetors. As the first step, calibrate the carburetor balancer gauge (special tool), as follows:

1. Remove the vacuum inlet screw (allen bolt) on No. 4 carburetor intake pipe by using 4 mm hexagon wrench (special tool), and install the adaptor (special tool) in the screw hole.

09911-70131	4 mm hexagon wrench

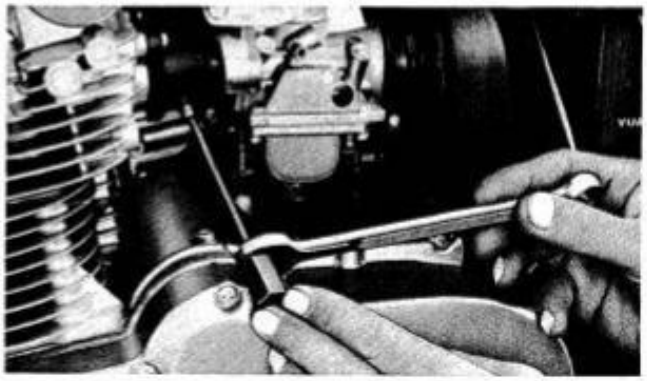

Fig. 2-228

2. Tie one of the four rubber hoses of the balance gauge to this adaptor.
3. **Start up engine, and keep it running at 1 200 r/min.**

09913-13121	Carburetor balancer set

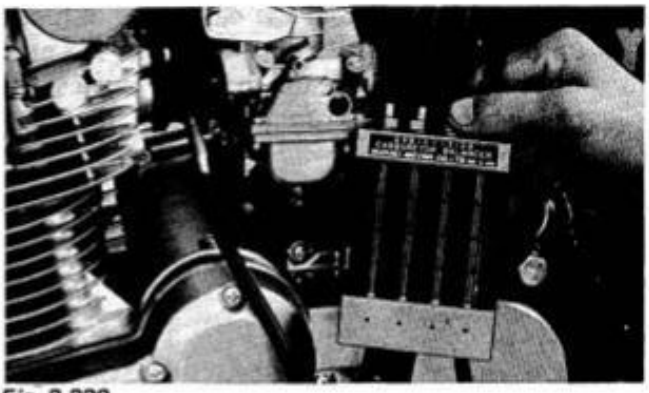

Fig. 2-229

4. Turn the air screw of the gauge so that the vacuum acting on the tube of that hose will bring the steel ball in the tube to the lower level line.

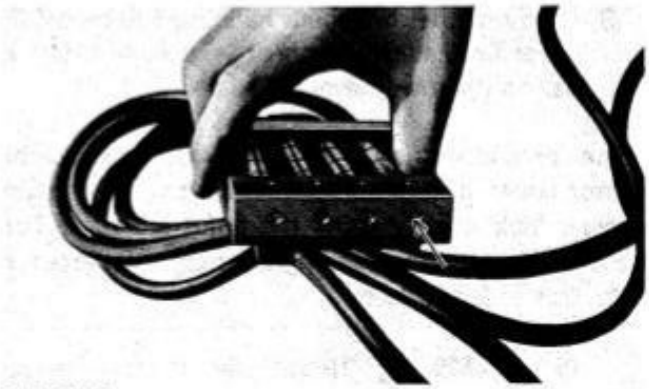

Fig. 2-230

5. Replace the hose by the next hose and, by adjusting the next air screw, bring the steel ball in the next tube to the lower level line.

Fig. 2-231

6. Repeat the process on the third and fourth tubes. The balancer gauge is now ready for use in balancing the carburetors.

Remove the respective vacuum inlet screw and install the adaptors in the holes. Tie the balancer gauge hoses to these adaptors, one hose to one adaptor, and balance the four carburetors as follows:

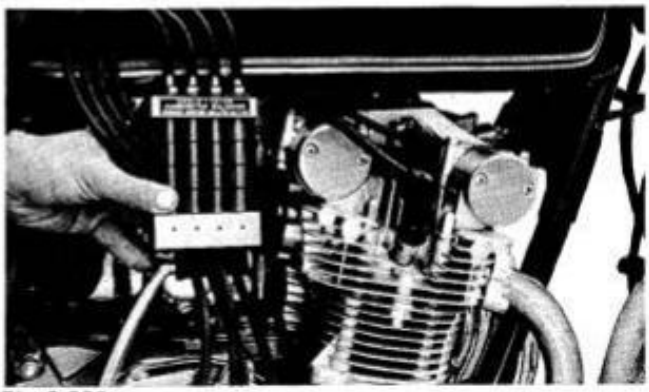

Fig. 2-232

7. Check to be sure that the ball in No. 4 tube is up at the lower level line, and that the other three balls are lined up to this reference steel ball, when engine is running at 1 200 r/min.

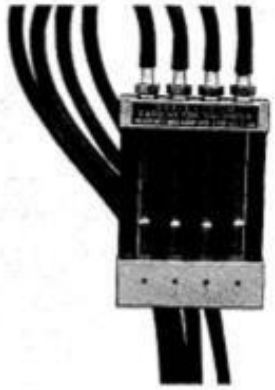

Fig. 2-233

8. If any of the three balls happened to be off the lower line, adjust its throttle valve to bring the ball to the lower level line.

The procedure is as follows: Remove carburetor cover, and loosen the throttle valve adjusting screw lock nut by using the adjusting tool. Turn the adjusting screw to bring the steel ball abreast of the ball of No. 4 tube.

09913-14520	Throttle valve adjusting wrench

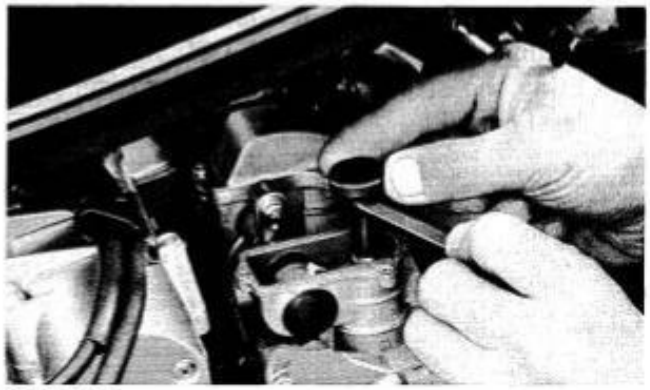

Fig. 2-234

With the three balls lined up equally to that of No. 4 tube, reposition the throttle stop screw, as necessary, to bring the engine speed to the specified idling level.

Idling speed	1 100 r/min

Fig. 2-235

4. Disconnect the balancer gauge hoses and adaptors, and restore the vacuum inlet screws.

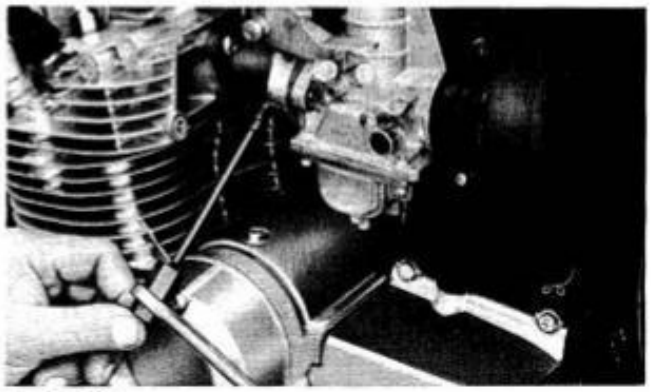

Fig. 2-236

Fuel level check

Check the fuel level in the way outlined on page 20.

TAPPET CLEARANCE ADJUSTMENT

The tappet clearance specification is the same for both intake and exhaust valves. Too small a tappet clearance could reduce the ability of the engine to develop power; too large a tappet clearance increases valve noise and promotes the wear of valve and seat. An engine running with not much noise coming from the valve mechanism and delivering full power has its tappets set to the specified clearance. In the present engine, the tappet clearance is increased or decreased by replacing the shim disc, made of a special wear-resistant material, fitted to the top of the tappet. The shim discs are easy to remove and refit. Tappet clearance adjustment must be checked and adjusted **1) at the time of periodical inspection, 2) when the valve mechanism is serviced, and 3) when the camshafts are disturbed** by removing them for servicing.

Checking the tappet clearance

Tappet clearance specification (for both intake and exhaust valves)	0.03 - 0.08 mm **(0.001 - 0.003 in)**

IMPORTANT:

1. The cam must be at the position Ⓐ or Ⓑ in order to check the tappet clearance or to remove the shim disc. A clearance reading taken with the cam in any other position off these two positions is false.
2. The clearance specification is for COLD state.

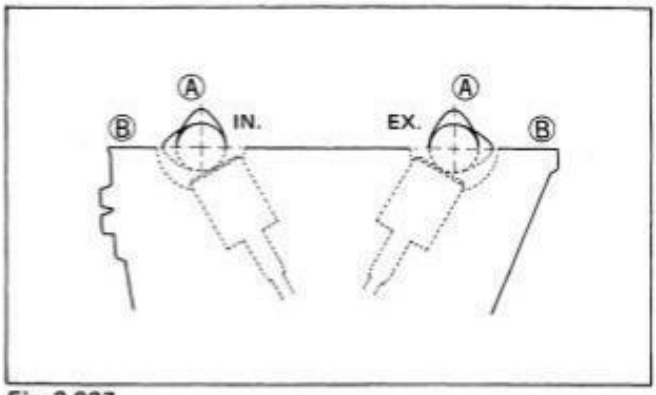

Fig. 2-237

3. To turn the crankshaft for clearance checking, be sure to use a 19-mm wrench and to rotate in normal running direction.

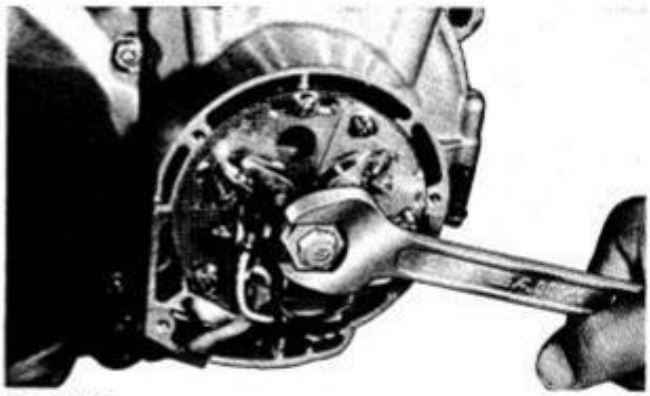

Fig. 2-238

1. Turn crankshaft to bring the exhaust cam of No. 1 cylinder to this position. Under this condition, read the clearance at the exhaust tappets of Nos. 1 and 2 cylinders using thickness gauge.

09900-20803	Thickness gauge

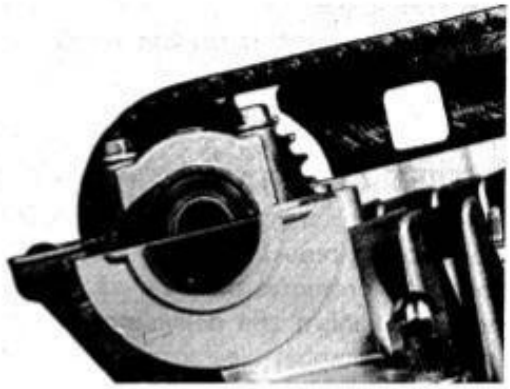

Fig. 2-239

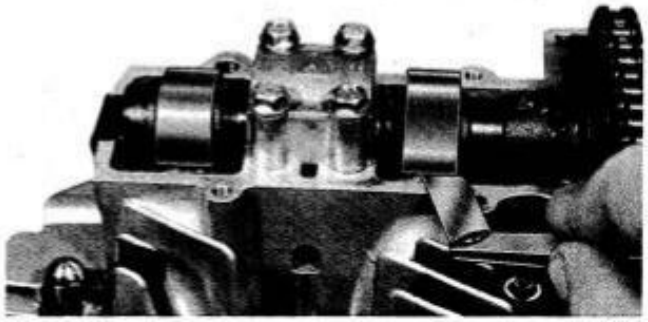

Fig. 2-240

2. The clearance having been set to the specification at the exhaust tappets of Nos. 1 and 2 cylinders, turn crankshaft by 180° (half rotation) to bring the intake cam of No. 1 cylinder to the position indicated. Read the clearance at the intake tappets of Nos. 1 and 2 cylinders and, as necessary, adjust the clearance to the specification at each.

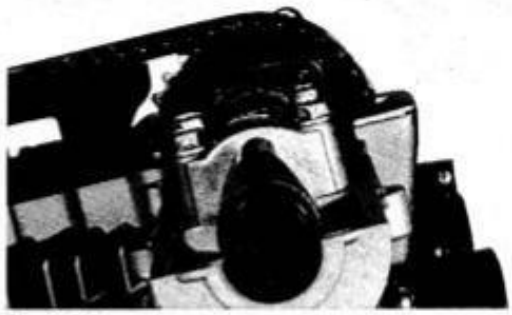

Fig. 2-241

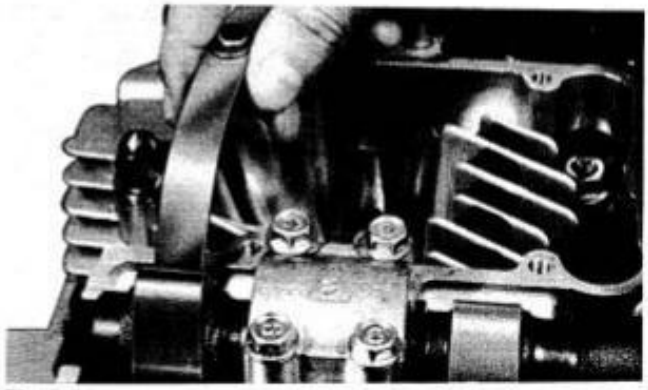

Fig. 2-242

3. Turn over crankshaft another 180°, bringing the exhaust cam of No. 4 cylinder to the position indicated. Under this condition, repeat the checking and adjusting process outlined in step "1" at the exhaust tappets of Nos. 3 and 4 cylinders.

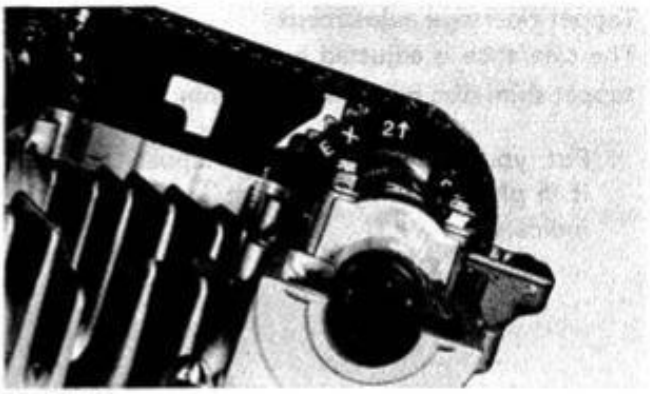

Fig. 2-243

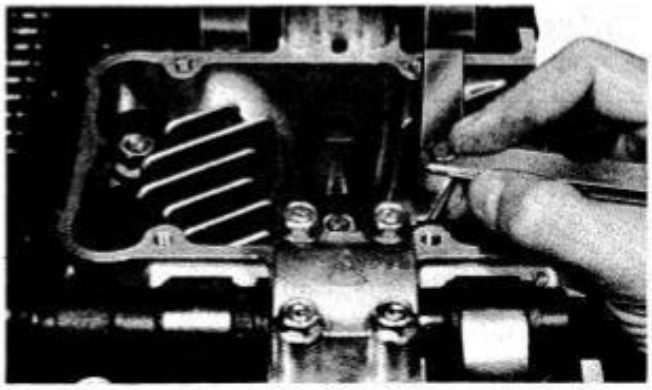

Fig. 2-244

4. Again turn over crankshaft another 180°, bringing the intake cam of **No. 4** cylinder to the position indicated. Similarly check and adjust the clearance at the intake tappets of Nos. 3 and 4 cylinders.

Fig. 2-245

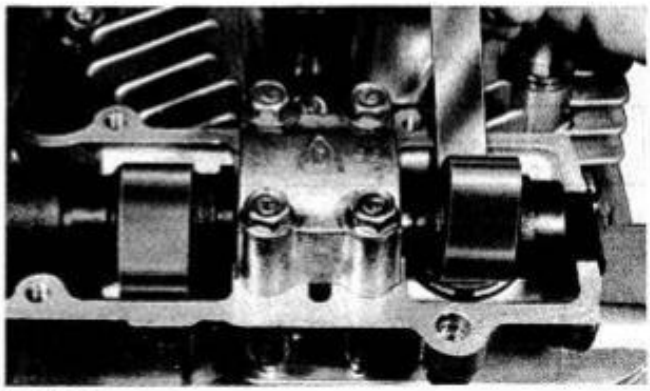

Fig. 2-246

Tappet clearance adjustment

The clearance is adjusted by replacing the existing tappet shim disc by a thicker or thinner disc.

1. Put your fingertips to the tappet, and turn it in place to bring its notch ① to the position indicated.

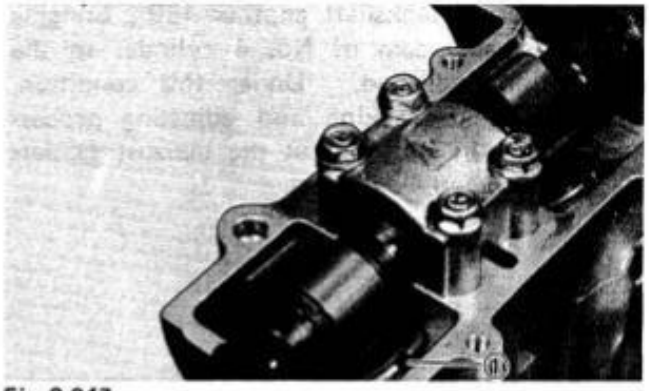

Fig. 2-247

2. Using the tappet depressor, push down the tappet.

09916-64510	Tappet depressor

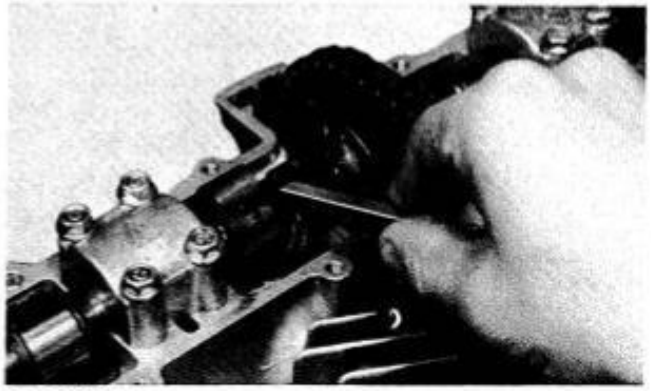

Fig. 2-248

NOTE: Be sure to make the tool bear on the tappet correctly, as shown, with its tip hitched securely.

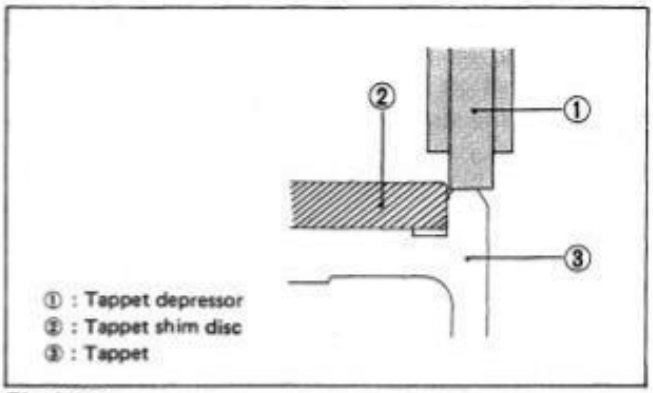

Fig. 2-249

3. Pick out the tappet shim from the tappet, using a pair of forceps.

09916-84510	Forceps

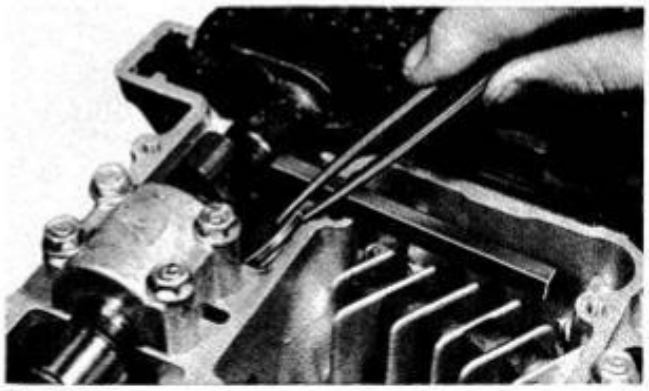

Fig. 2-250

4. Check the figures printed on the shim. These figures tell the thickness of the shim, as illustrated.

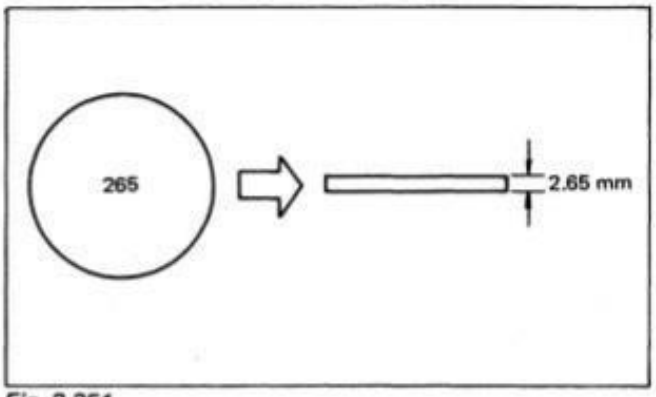

Fig. 2-251

5. Select such a replacement shim as will provide a clearance coming within the specified range (0.03 - 0.08 mm). For the purpose of this adjustment, a total of 20 sizes of tappet shim are available, ranging from 2.15 to 3.10 mm in steps of 0.05 mm each. Put the selected shim to the tappet.

Tappet shim size chart

No.	Thickness (mm)	Part No.	No.	Thickness	Part No.
1	2.15	12892-45000	11	2.65	12892-45010
2	2.20	12892-45001	12	2.70	12892-45011
3	2.25	12892-45002	13	2.75	12892-45012
4	2.30	12892-45003	14	2.80	12892-45013
5	2.35	12892-45004	15	2.85	12892-45014
6	2.40	12892-45005	16	2.90	12892-45015
7	2.45	12892-45006	17	2.95	12892-45016
8	2.50	12892-45007	18	3.00	12892-45017
9	2.55	12892-45008	19	3.05	12892-45018
10	2.60	12892-45009	20	3.10	12892-45019

NOTE: 1. Before fitting the tappet shim to the tappet, be sure to oil its top and bottom faces with engine oil.
2. Fit the tappet shim so that the figured side faces to the tappet.

6. After replacing the tappet shim, check the clearance again to be sure that it is within the specified range.

COMPRESSION PRESSURE

The compression of a cylinder is a good indicator of its internal condition. The decision to overhaul the engine is often based on the results of a compression test. Periodic maintenance records kept at your dealership should include compression readings for each maintenance service.

Compression pressure:

COMPRESSION PRESSURE

Standard	Limit	Max. difference among each cylinder
9 - 12 kg/cm² (128 - 171 psi)	6.5 kg/cm² (92 psi)	2 kg/cm² (28 psi)

A low compression pressure can indicate any of the following malconditions:

* Excessively worn cylinder wall
* Worn-down piston or piston rings
* Piston rings stuck in the grooves
* Poor sealing of valves
* Ruptured or otherwise defective cylinder head gasket

Overhaul the engine in the following cases; 1) compression pressure in any one of the cylinders is less than 6.5 kg/cm², 2) the difference in compression pressure between the highest and lowest measurements is more than 2 kg/cm², and 3) compression pressure in the four cylinders each is below 9 kg/cm² (standard) even when it measures more than 6.5 kg/cm².

Compression pressure test procedure:

NOTE: 1. Before testing the engine for compression pressure, make sure that the cylinder head nuts and bolts are tightened to specified torque values.
2. Warm up the engine before testing.

1. Remove all spark plugs.
2. Fit the compression gauge ① to one of the plug holes, taking care to make the connection absolutely tight.

09915-64510	Compression gauge

3. Twist the throttle grip full open.
4. Crank the engine a few seconds with the starter, and read the highest gauge indication as the compression of that cylinder. Repeat this procedure with the other cylinder.

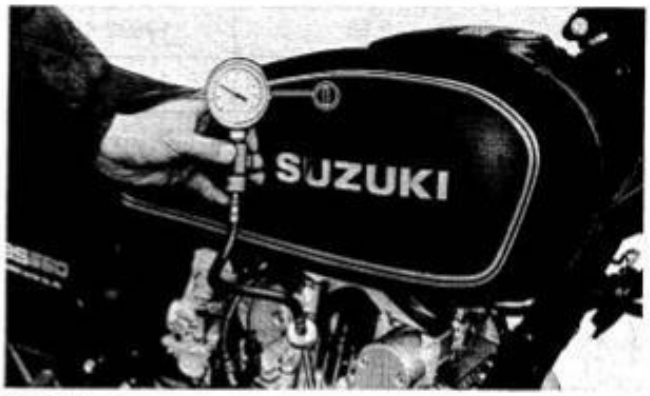

Fig. 2-252

OIL PUMP PRESSURE

Every 5 000 km, test the oil pump for discharge pressure, as follows:

1. Have the oil level standing between "F" ① and "L" ② mark in the inspection window, and check to be sure there is no sign of oil leakage at any part of the lubrication oil circuit. Be sure, also, that both oil strainer (in the sump) and oil filter (in the pump discharge line) are clean.

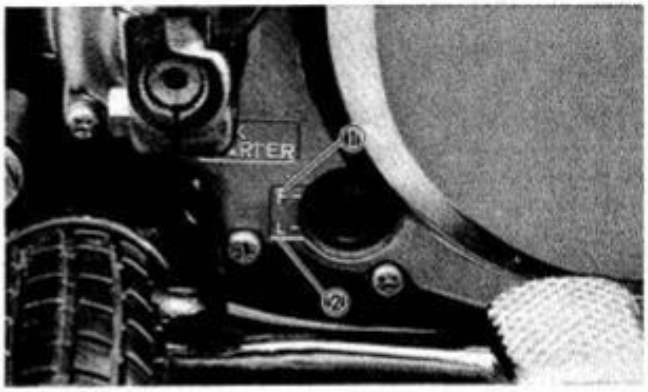

Fig. 2-253

2. Start the engine and check if the oil pump pressure indicator light is turned on. If it keeps on lighting, check the oil pump pressure indicator light circuit. If it is in good condition, check the oil pump pressure in the following manner:
   - Install the oil pressure gauge ① in the position shown in the figure.
   - Warm up the engine as follows:
     Summer 10 min. or so at 2 000 r/min
     Winter 20 min. or so at 2 000 r/min
   - After warming up operation, increase the engine speed to 3 000 r/min, and read the oil pressure gauge.
   - The oil pump pressure is specified below:

Oil pump pressure	Above 0.1 kg/cm² (1.4 psi) and Below 0.5 kg/cm² (7.1 psi) at 3 000 r/min

09915-74510	Oil pressure gauge

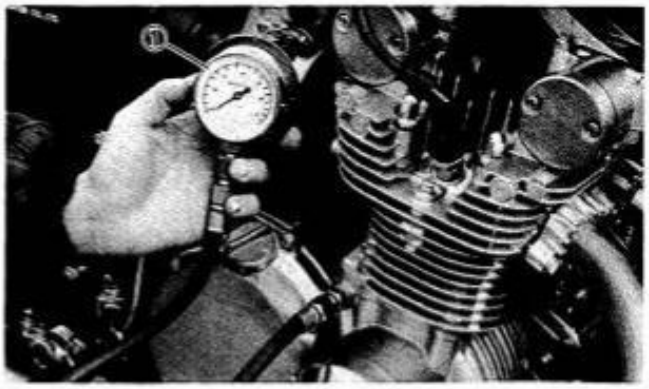

Fig. 2-254

If the pressure is too low, it means that the oil pump is internally worn or otherwise defective and needs to be overhauled. If inner parts are found to be worn down to or beyond the limit, replace the complete oil pump unit.

CHASSIS

GROUP 3

CONTENTS

STEERING 85
DISASSEMBLY 85
INSPECTION 88
REASSEMBLY 88
REPLACEMENT OF STEERING STEM RACES 89
STEERING LOCK 90
FRONT SUSPENTION 91
DISASSEMBLY 92
INSPECTION 93
REASSEMBLY 93
REAR SUSPENSION 95
DISASSEMBLY 95
INSPECTION 95
REASSEMBLY 96
FRONT WHEEL 96
DISASSEMBLY 96
INSPECTION 97
REASSEMBLY 99
REAR WHEEL 100
DISASSEMBLY 101
INSPECTION 103
REASSEMBLY 104
DRIVE CHAIN 106
SWINGING ARM 107
DISASSEMBLY 108
INSPECTION 109
REASSEMBLY 109
FRONT BRAKE CALIPER 111
DISASSEMBLY 112
INSPECTION 113
REASSEMBLY 114
MASTER CYLINDER 117
DISASSEMBLY 117
INSPECTION 118
REASSEMBLY 119
BRAKE PARTS TO BE PERIODICALLY REPLACED 120
RIDING SAFETY INSPECTION GUIDE 121
TIGHTENING TORQUE SPECIFICATIONS 122

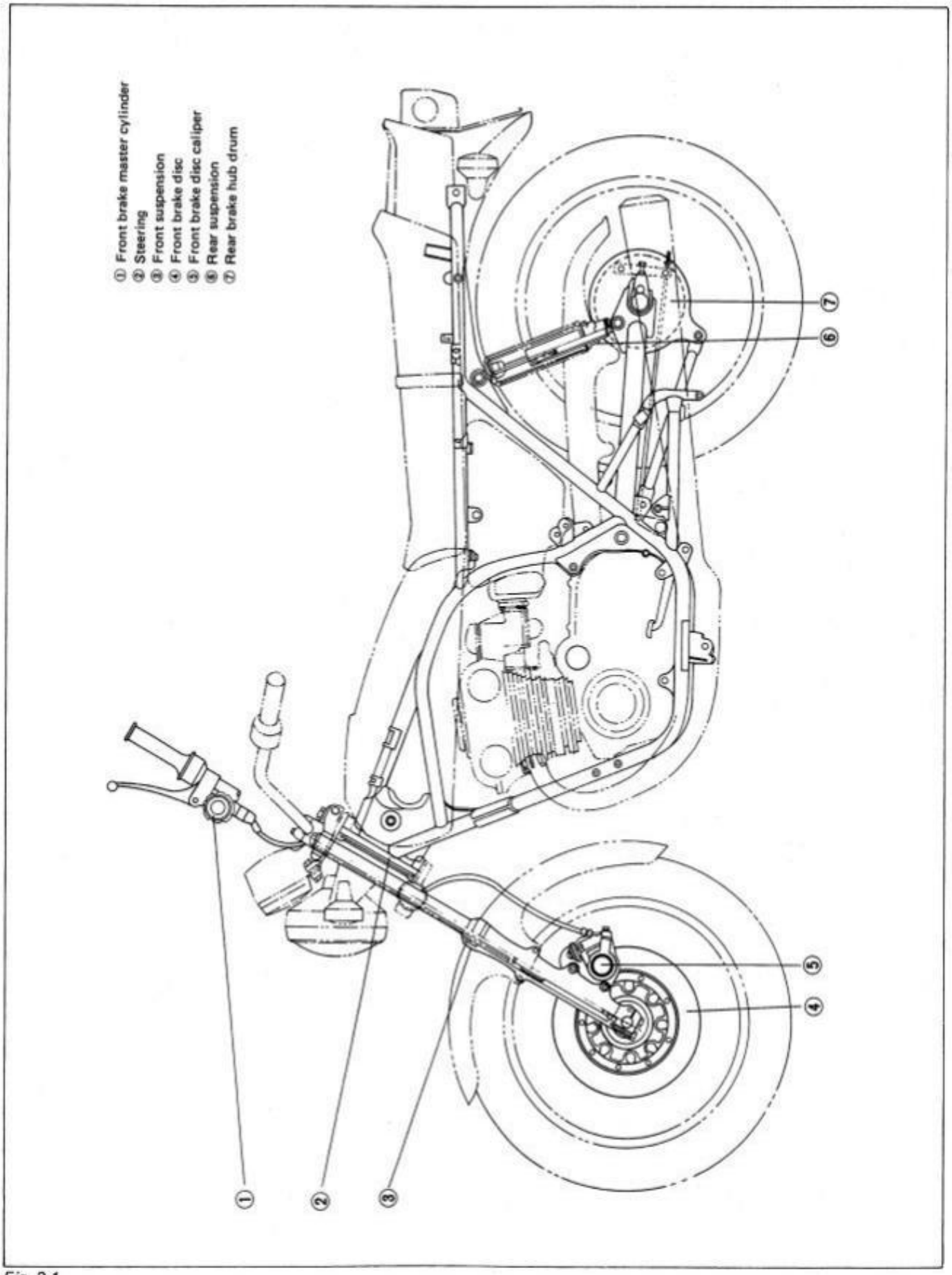
① Front brake master cylinder
② Steering
③ Front suspension
④ Front brake disc
⑤ Front brake disc caliper
⑥ Rear suspension
⑦ Rear brake hub drum
①
②
③
④
⑤
⑥
⑦

Fig. 3-1

STEERING

The steering stem is held by the frame head pipe. The top and bottom ends of the head pipe have an inner and an outer races, with a circular row of steel balls between the two races.

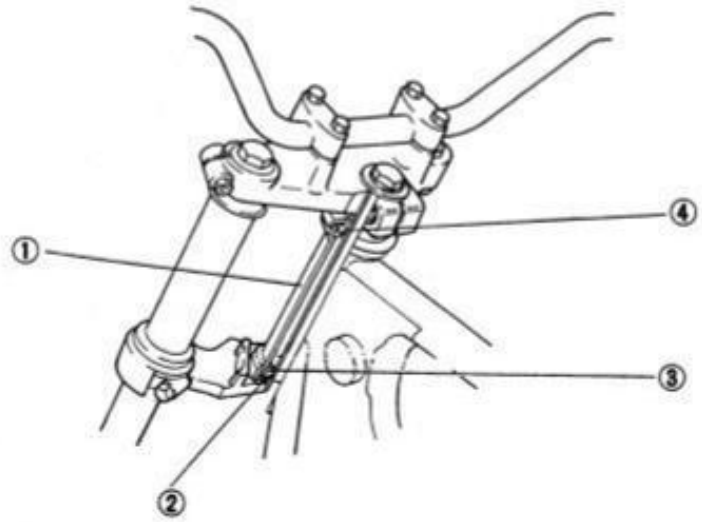

① Frame head pipe
② Outer races
③ Inner races
④ Steel balls

Fig. 3-2

DISASSEMBLY

1. Disconnect the clutch cable at the clutch lever.
2. Disconnect tachometer cable ① and speedometer cable ② from the lower part of the meters.

Fig. 3-3

3. Remove the headlamp unit, and disconnect their lead wires.
4. Remove the headlamp housing ①.

Fig. 3-4

5. Undo the coupler of the meter assembly. Remove the two mounting nuts ① of this assembly, and take it down.

Fig. 3-5

6. Remove the two mounting bolts ① and take down the master cylinder.

Tightening torque:

Master cylinder mounting bolt tightening torque	0.6 - 1.0 kg-m (4.5 - 7.0 lb-ft)

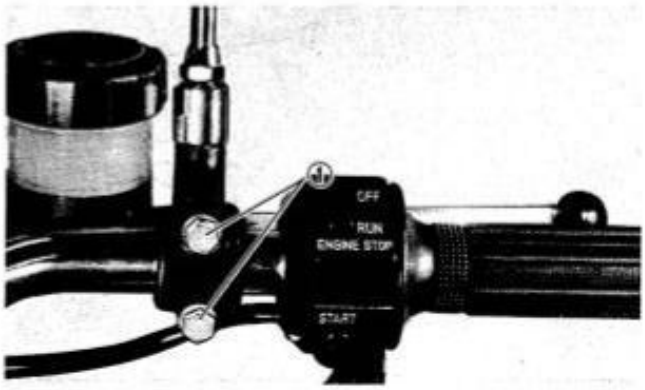

Fig. 3-6

7. The handlebar is secured by four bolts ① . Remove these bolts and take down the handlebar ②.

Tightening torque	1.2 - 2.0 kg-m (8.5 - 14.5 lb-ft)

Fig. 3-7

8. Remove the upper bracket as follow: Loosen fork-tube upper pinch bolts ① and steering stem pinch bolt ②, remove steering stem bolt ③ and lift the upper bracket off.

Tightening torque:

Front fork tube upper pinch bolt	2.0 - 3.0 kg-m (14.5 - 21.5 lb-ft)
Steering stem bolt	3.6 - 5.2 kg-m (26.0 - 37.5 lb-ft)
Steering stem pinch bolt	1.5 - 2.5 kg-m (11.0 - 18.0 lb-ft)

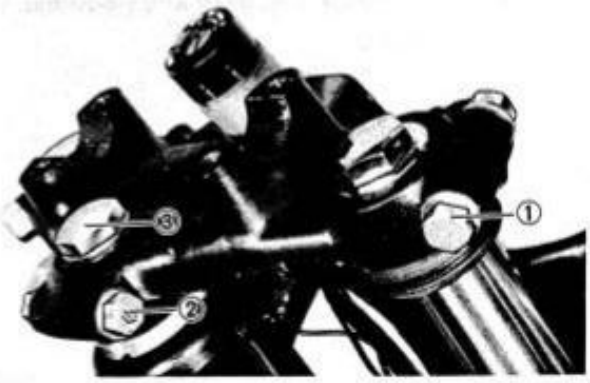

Fig. 3-8

9. Remove two axle holders ①, right and left, take off the front wheel.

NOTE: Prop up the machine by putting a jack under the engine or placing a box under the frame.

Tightening torque	1.5 - 2.5 kg-m (11.0 - 18.0 lb-ft)

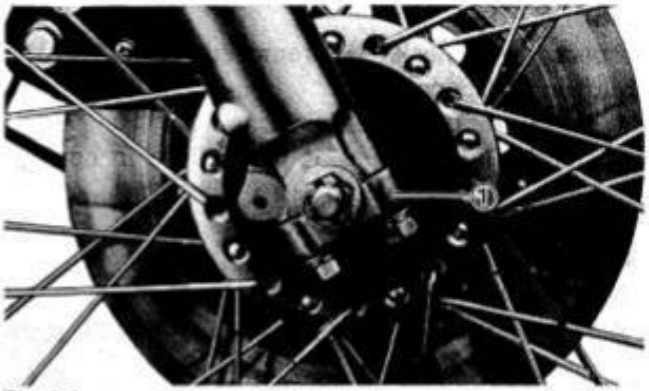

Fig. 3-9

10. Remove the bolt ① securing the two-way joint ② to the lower section of steering stem.
11. Remove the two mounting bolts on front disc caliper assembly, and take down the whole assembly, master cylinder and others.

CAUTION: Be careful not to bend the brake hoses.

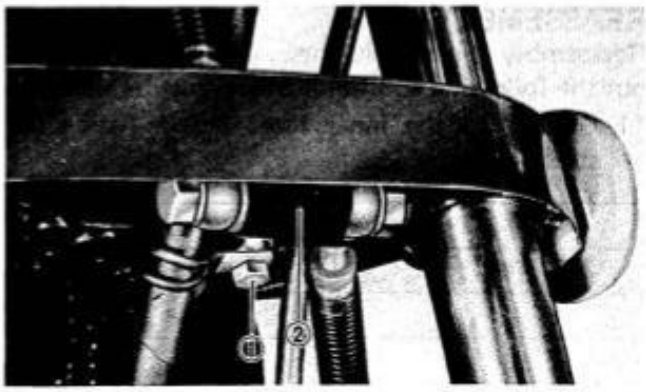

Fig. 3-10

12. Remove the fender. Loosen fork-tube lower pinch bolts ①, and draw out the front fork assembly.

Tightening torque	2.0 - 3.0 kg-m (14.5 - 21.5 lb-ft)

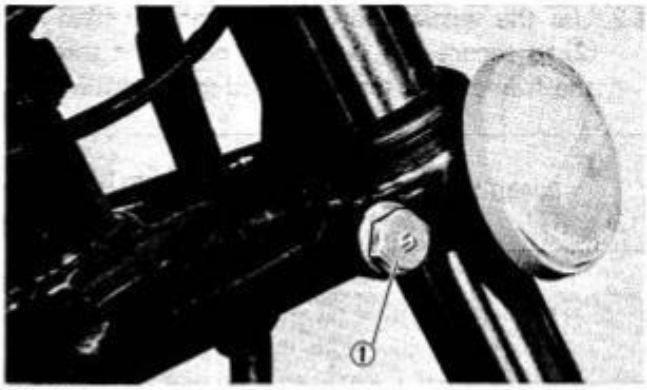

Fig. 3-11

13. Using steering stem nut wrench ②, remove the steering stem nut ①, and slide off the stem. Be careful not to let the steel balls fall off.

09940-10122	Steering stem nut wrench

Fig. 3-12

INSPECTION

Inspect and check the removed parts for the following malconditions:

1. Handlebar distortion
2. Handle holder wear at the surface in contact with the handlebar
3. Broken cables and lead wires
4. Race wear and brinelling
5. Worn or damaged steel balls ①
6. Distortion of steering stem and handle stoppers, right and left

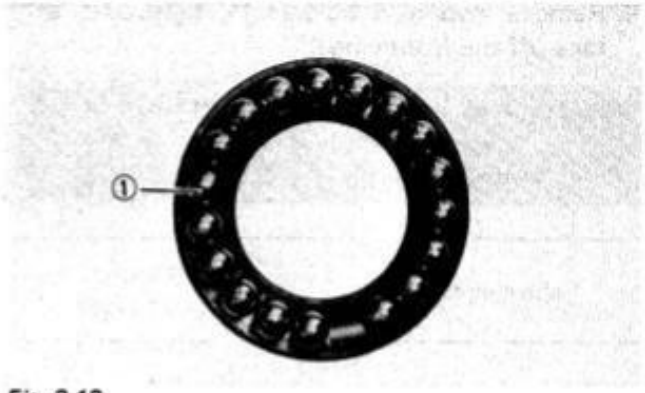

Fig. 3-13

REASSEMBLY

Reassembly is generally the reverse of disassembly, but the following additional steps must be taken:

1. Grease ① the inner races before fitting the steel balls.

Number of steel balls	
TOP	BOTTOM
18	18

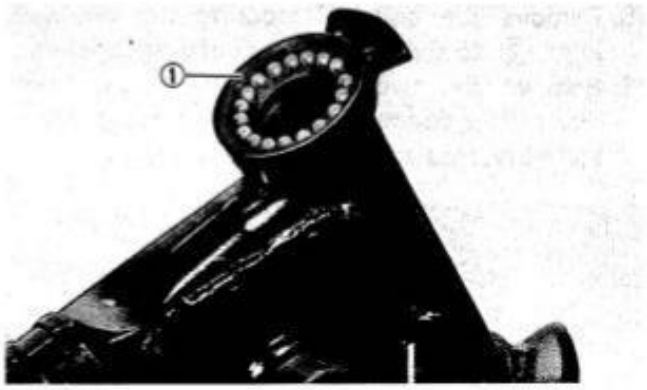

Fig. 3-14

2. Use the special tool ① to tighten the stem nut ② to secure the stem after passing it through the frame head pipe and fitting the outer race.

09940-10122	Steering stem lock nut wrench

NOTE: While tightening the stem nut with the special tool, turn the stem right and left to feel its "heaviness" and stop tightening before it becomes too heavy.

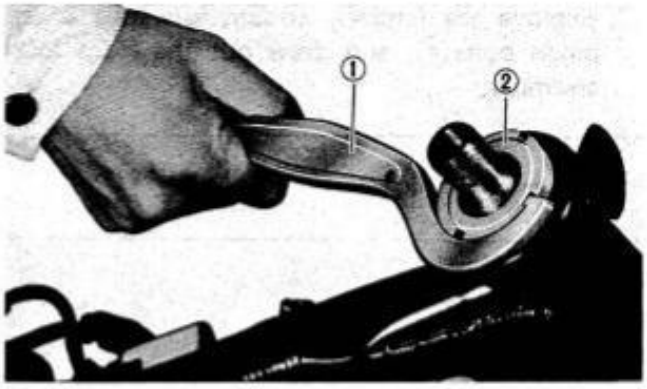

Fig. 3-15

3. When securing the axle holders, be sure to tighten the nuts on each holder in such a way that clearances ① ahead of and behind the axle will become equalized.

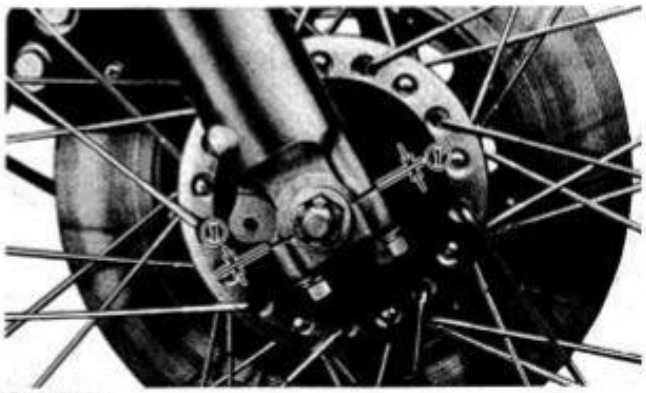

Fig. 3-16

4. Install the front fork assembly, upper bracket and handlebar, in that order. Set the handlebar to match its punched mark ① to the mating face of the holder.

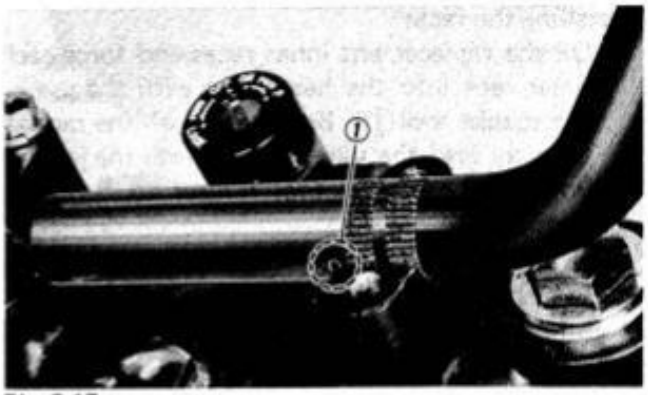

Fig. 3-17

NOTE: As in the case of axle holders, secure each handle holder in such a way that the clearance ① ahead of and behind the handlebar will become equalized.

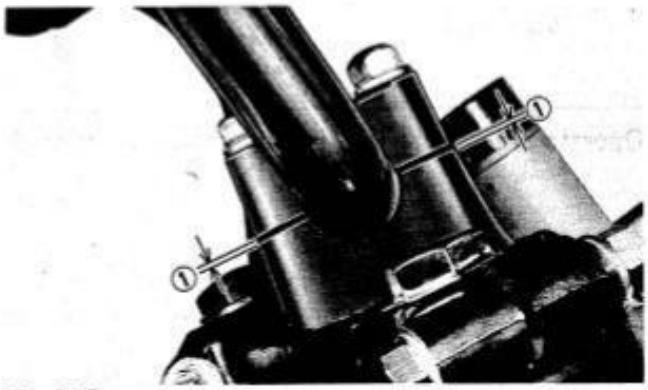

Fig. 3-18

5. Be particularly careful in reconnecting the lead wires inside the headlamp housing. The lead wires for both turn signal lamps, right and left, are black, whereas the lead wires are light green ① (for right-hand turn signal) and black ② (for left-hand turn signal).

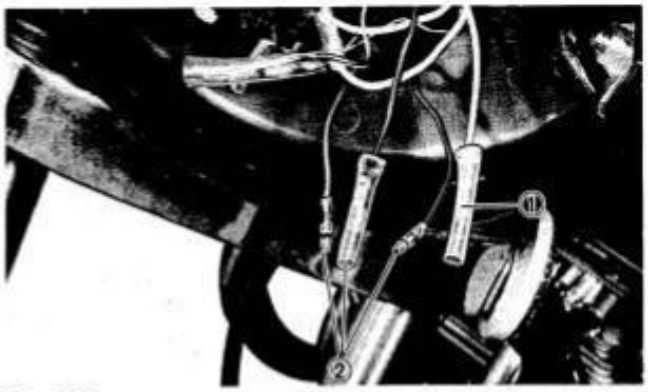

Fig. 3-19

REPLACEMENT OF STEERING STEM RACES

Disassembly

1. Remove the steering stem.
2. Remove the two inner races fitted to the top and bottom ends of head pipe.

Fig. 3-20

Installing the races

1. Oil the replacement inner races and force each inner race into the head pipe with the use of the special tool ①. Be sure to push the race all the way into the pipe, that is, until the jacking bolt of the special tool refuses to turn any further.
2. Reassemble by reversing the disassembly sequence, with the replacement outer races properly fitted. Load the races with steel balls as outlined already.

09941-34511	Steering inner race and swing arm bearing installer

Operate the special tool in the manner illustrated:

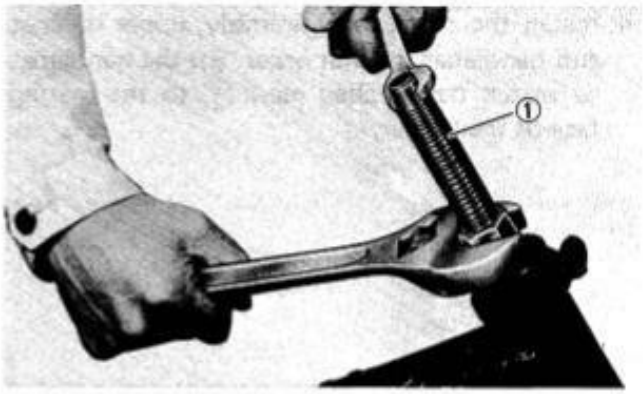

Fig. 3-21

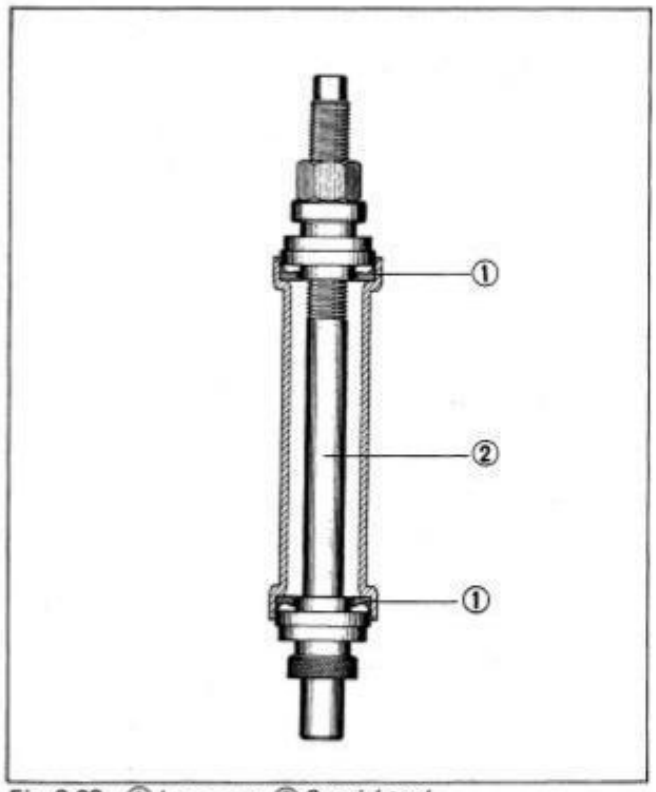

Fig. 3-22 ① Inner race, ② Special tool

STEERING LOCK

The locking mechanism is built in the ignition switch, and serves to lock the switch body and steering stem together.

How to use

Turn the steering handlebar to lock, right or left; and, while pushing down on the switch, rotate it to **LOCK** position. This causes the lock pin to hitch onto the stopper plate integral with steering stem, thereby latching the switch to the stem. The same latching action occurs when the switch is similarly rotated to **P** (for parking) position.

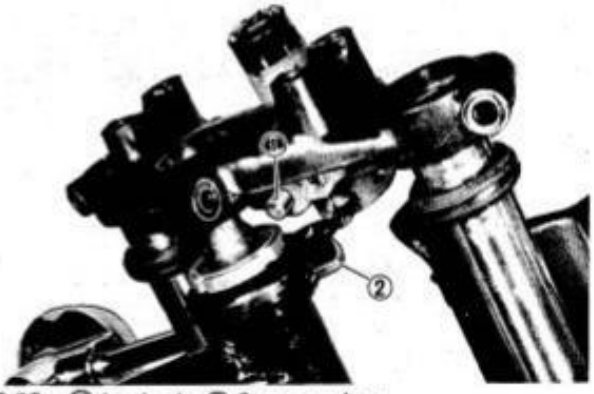

Fig. 3-23 ① Lock pin, ② Stopper plate

FRONT SUSPENSION

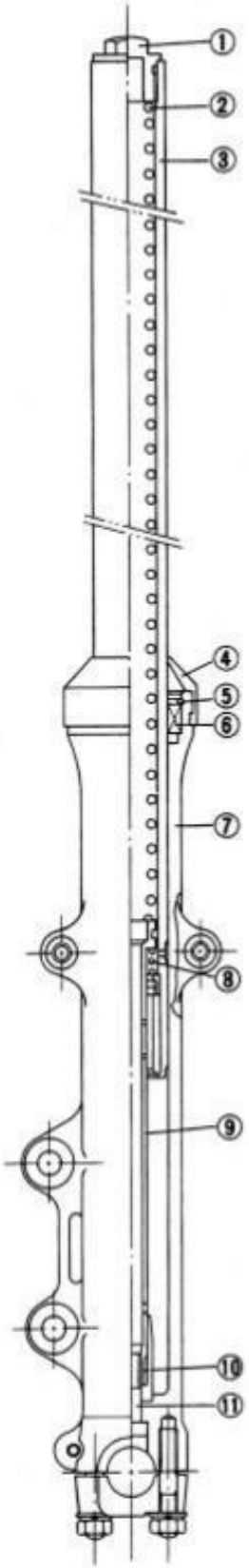

① Cap bolt
② Spring
③ Inner tube
④ Dust seal
⑤ Oil seal stopper ring
⑥ Oil seal
⑦ Outer tube
⑧ Rebound spring
⑨ Damper rod
⑩ Oil lock piece
⑪ Allen bolt

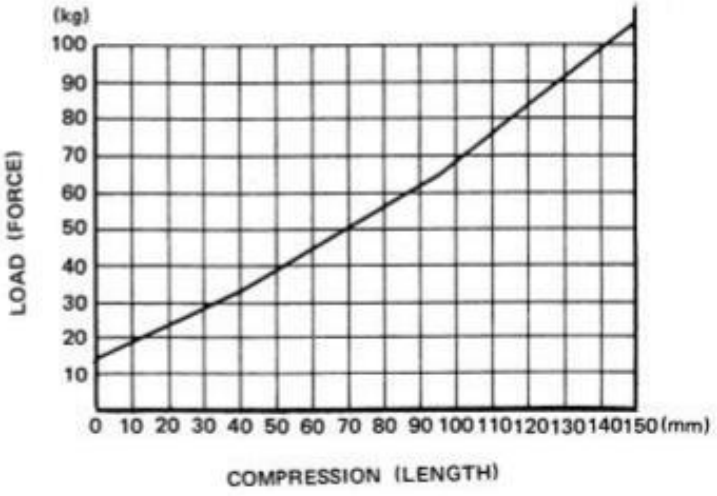

Fig. 3-24

DISASSEMBLY

Place the motorcycle on the center stand, with the front wheel lifted off the floor and the engine blocked up as in "STEERING".

1. Remove two caliper mounting bolts①, and take off the caliper assembly②, taking care not to bend the brake hose.

Tightening torque	2.5 - 4.0 kg-m (18.0 - 29.0 lb-ft)

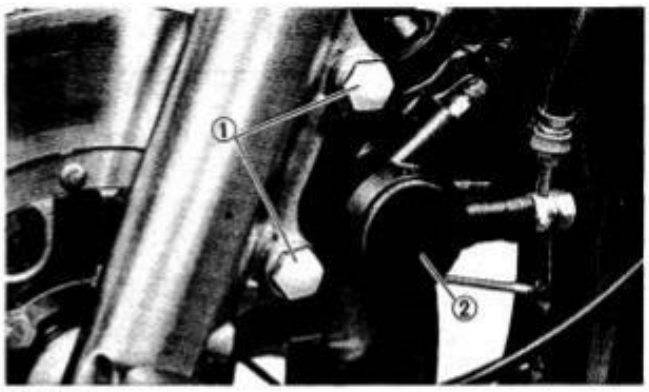

Fig. 3-25

2. Remove the front wheel. Remove the right and left fender bolts①.

NOTE: Before removing this wheel, have the fork cap bolts loosened.

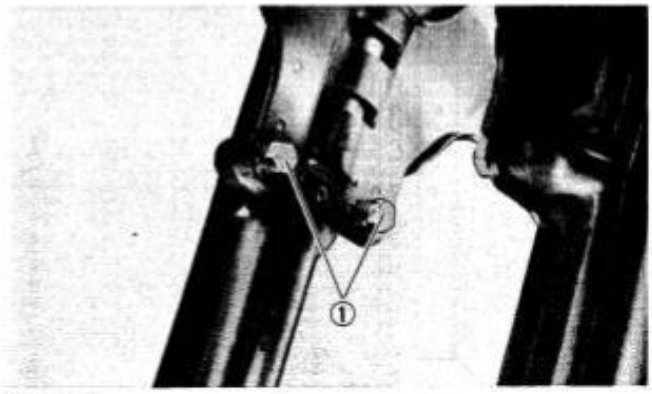

Fig. 3-26

3. With the upper and lower pinch bolts of the fork sufficiently loosened, remove the front fork by drawing it out.

Tightening torque:

Upper pinch nut	2.0 - 3.0 kg-m (14.5 - 21.5 lb-ft)
Lower pinch bolt	2.0 - 3.0 kg-m (14.5 - 21.5 lb-ft)

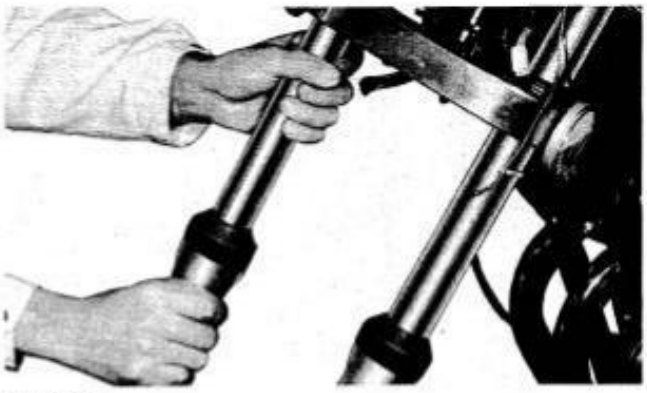
Fig. 3-27

4. Remove fork cap bolts, and drain out fork oil.
5. From the bottom end of each fork removed, remove the allen bolt by torquing it with the Allen wrench ① with a "T" handle ② . This is accomplished by clamping the outer tube in the vise and using the fork assembling tool, as shown.

09914-25811	"T" hexagon wrench
09940-34512	Front fork assembling tool

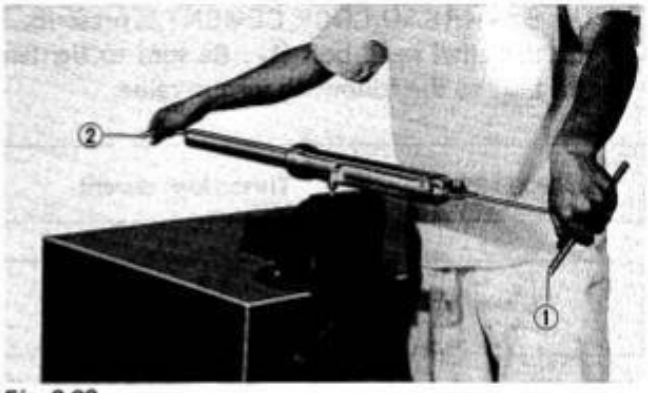

Fig. 3-28

6. Using the oil seal remover, remove the oil seal ring ① and oil seal ② .

09913-50121	Oil seal remover

For U.S.A.

09913-50121	Oil seal remover

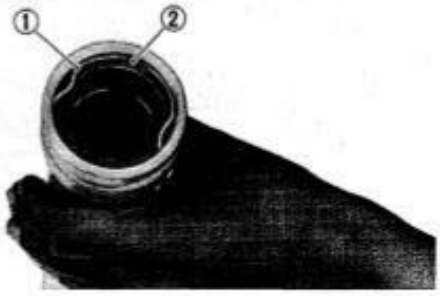

Fig. 3-29

INSPECTION

Oil seals

Replace oil seals found in damaged condition: inspect the sliding surface of each seal for scratch marks. If oil leakage was noted at the time of removing the front fork, the oil seal there should be replaced.

Inner tubes

Inspect the sliding surface of each inner tube for wear or damage. A tube in badly worn or damaged condition must be replaced.

REASSEMBLY

Reverse the sequence of disassembling steps. Observe the following instructions:

1. To install the oil seal, use the front fork oil seal installer ①. Be sure to use new oil seals: oil seals removed in disassembly are not good enough for re-use in most cases.

09940-50111	Front fork oil seal in staller

Fig. 3-30

2. Use of THREAD LOCK CEMENT is prescribed for the allen head bolt ①. Be sure to tighten this bolt to the following torque value.

99000-32040	Thread lock cement

Tightening torque	1.5 - 2.5 kg-m (11.0 - 18.0 lb-ft)

Fig. 3-31

3. For the fork oil, use a half-and-half mixture of motor oil (SAE 10W/30) and ATF. The amount of this mixture needed to fill up each leg is:

Fork leg oil capacity (one leg)	165 ml (5.58/5.81 US/Imp oz)

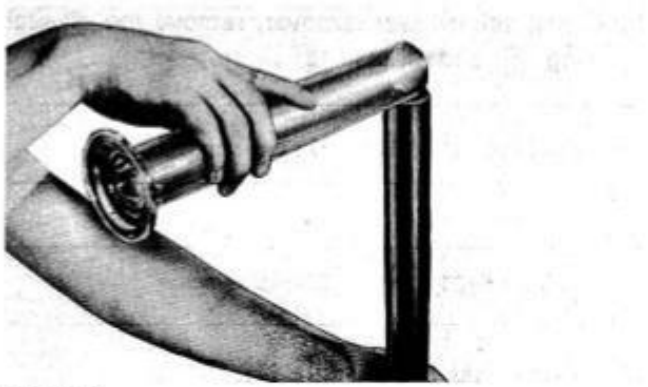

Fig. 3-32

4. When securing the front axle holders, check to be sure to equalize the clearances ①, front and back, on each holder. In order to make sure that the two legs, right and left, are parallel, check as follows: Fasten the two axle holders tentatively and loosen the four mounting bolts of front fender, under this condition, stroke the fork up and down several times to make the two legs parallel. Tighten the bolts on axle holders and fender fully after checking in this manner.

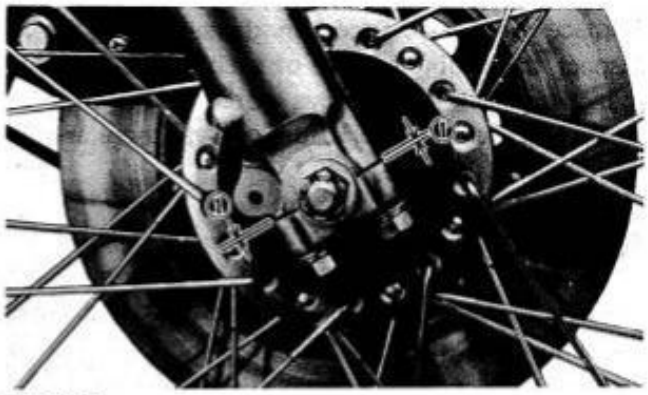

Fig. 3-33

REAR SUSPENSION

Hydraulic dampers, each fitted with a coil spring, absorb road shocks in the rear suspension. The spring preload can be varied in five steps. The total damping stroke is 85 mm (3.35 in).

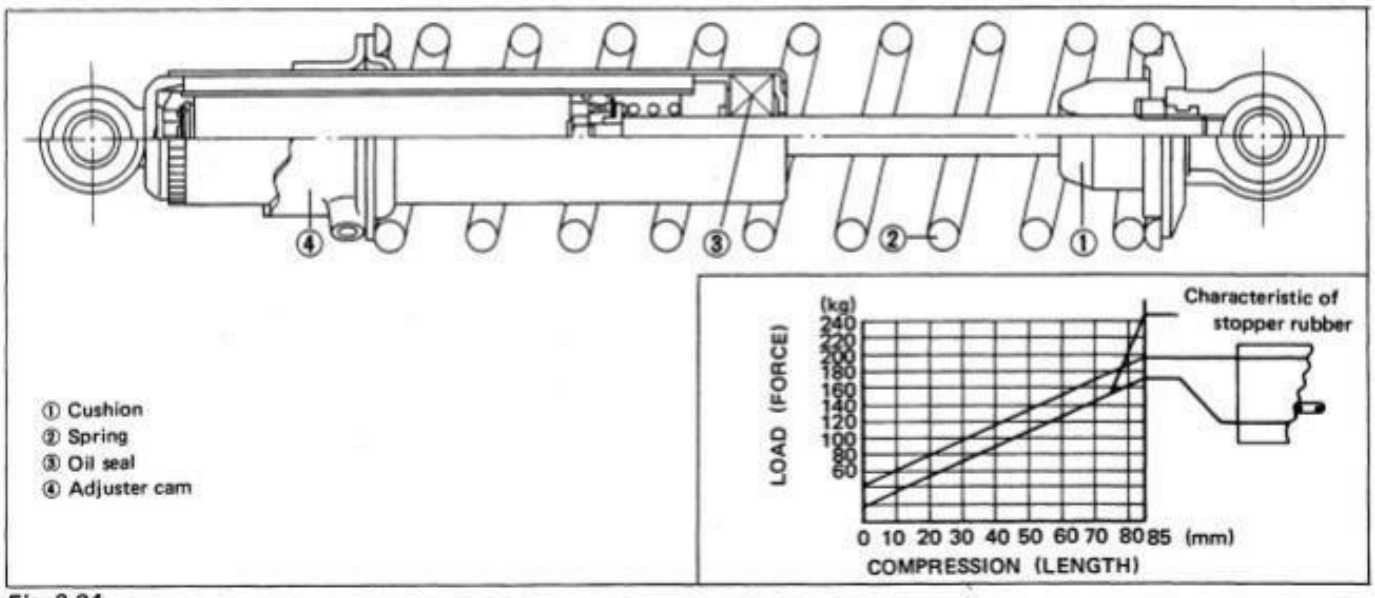

Fig. 3-34

DISASSEMBLY

1. Each rear shock unit — damper and coil spring combination — is secured on frame by two nuts. Remove these nuts and take down the two units.
2. To disassemble the rear shock unit, compress the spring and take out the upper spring seat: this permits the unit to be broken apart into parts.

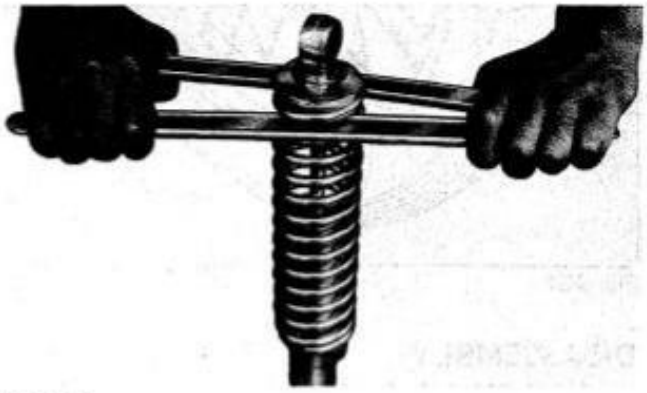

Fig. 3-35

INSPECTION

1. Inspect the hydraulic damper for evidence of oil leakage.
2. Check the piston rod for distortion. Visually inspect the other internals for damage — cracks, dents, galling, etc.

IMPORTANT: There must be a good balance in shock absorbing performance between the two units, right and left. If one unit is so poor in performance as to require replacement, then the two should be replaced at the same time. Always treat the two as an inseparable pair.

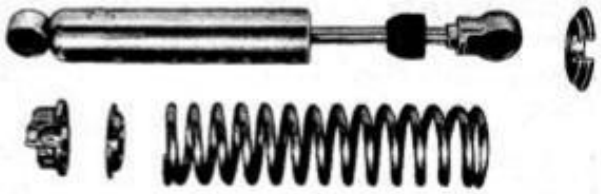

Fig. 3-36

REASSEMBLY

1. Reassemble by reversing the sequential order of removal and disassembly.
2. Adhere to the tightening torque specification:

Rear shock absorber nut	2.0 - 3.0 kg-m (14.5 - 21.5 lb-ft)

FRONT WHEEL

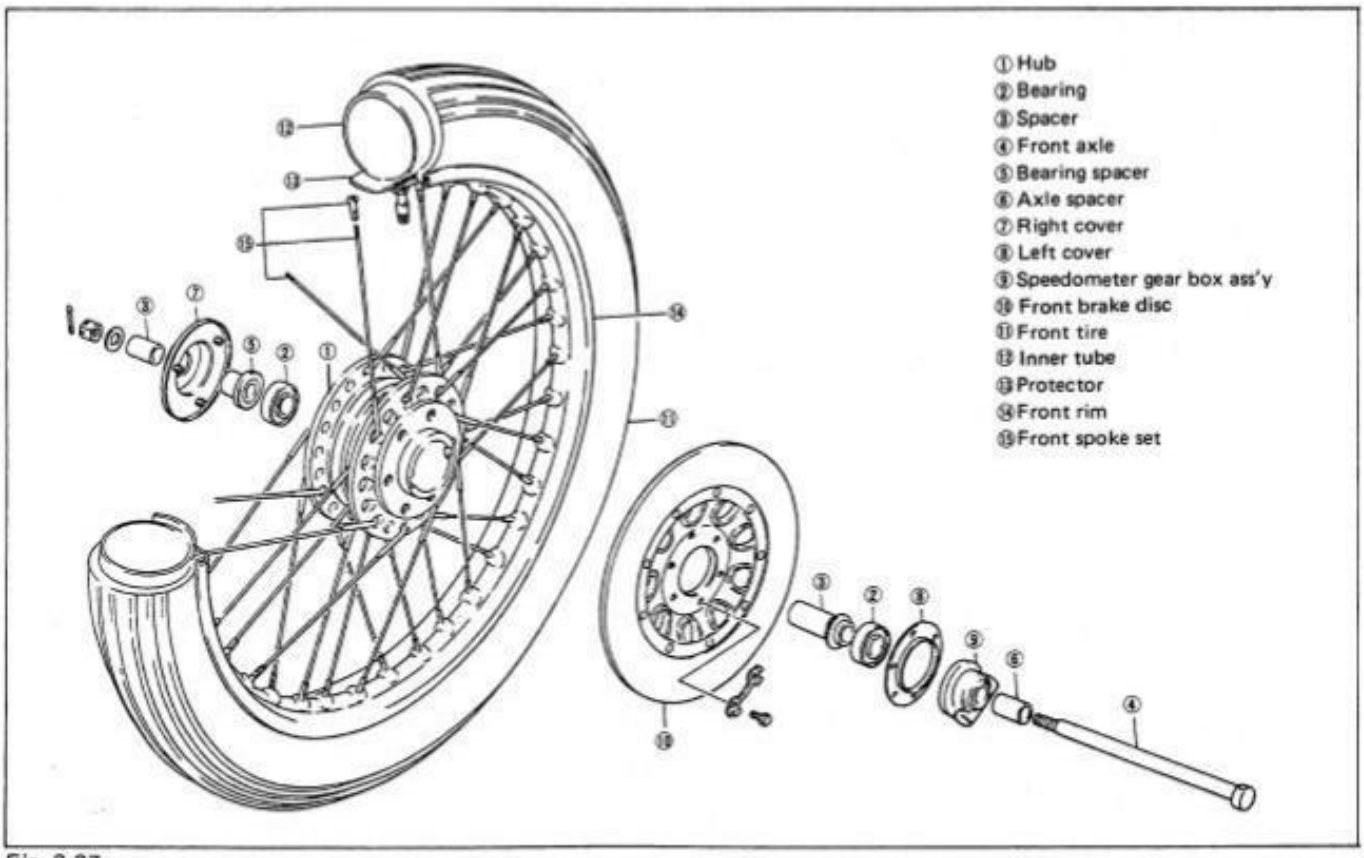

Fig. 3-37

DISASSEMBLY

1. Have the front wheel lifted off the floor by blocking up the engine, with the center stand and a jack resting firmly on the floor.
2. Disconnect speedometer cable at the speedometer gearbox.
3. Pull off cotter pin ① from the axle nut ②; and have this nut loosened. Remove the axle holders, right and left, and take off the wheel.

CAUTION: After removing the front wheel, do not squeeze the front brake lever or the brake pads will move inside the caliper. The pads should be left where they were at the time of wheel removal, otherwise a difficulty will be encountered in reinstalling.

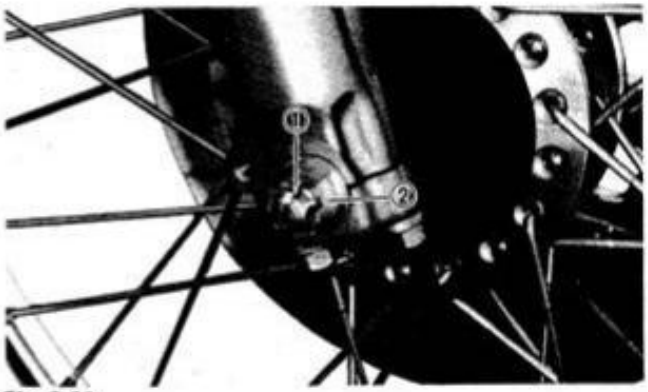

Fig. 3-38

4. Unlock the 6 bolts ① securing the disc to the wheel hub by flatten the lock washers ②. Remove the bolts and separate the disc from the wheel.

Tightening torque	1.5 - 2.5 kg-m (11.0 - 18.0 lb-ft)

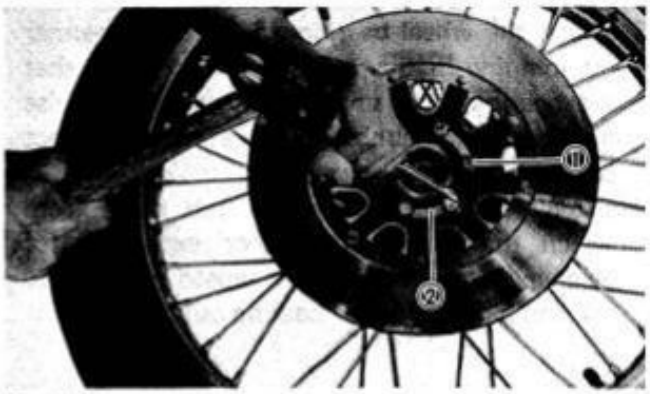

Fig. 3-39

5. Remove wheel bearing ①.

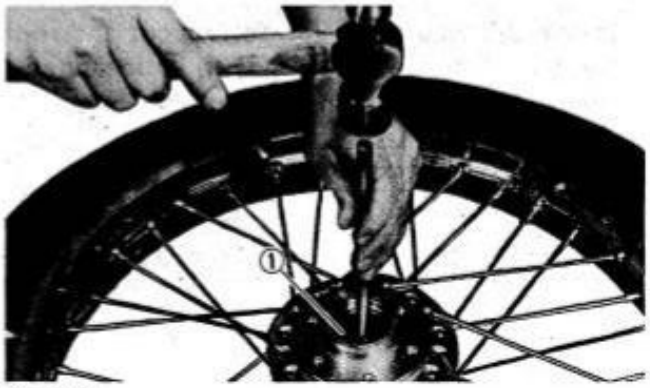

Fig. 3-40

INSPECTION

1. Mike the disc ① to check its thickness for wear. This thickness can be checked with the disc and wheel in place. The service limit is specified for the thickness of this disc:

Front disc thickness	
Standard	Service limit
6.7 mm (0.26 in)	Under 6.0 mm (0.24 in)

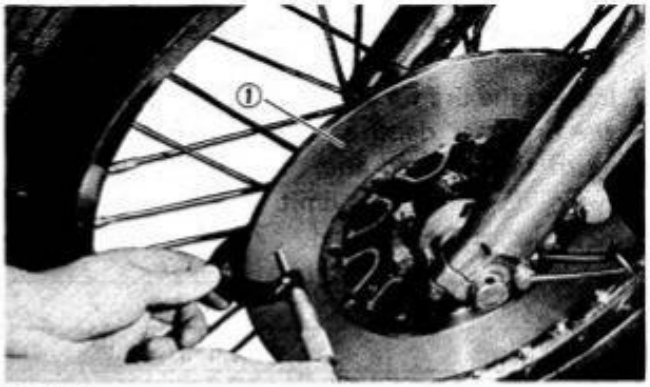

Fig. 3-41

2. With the disc mounted on the wheel, check the disc for face runout with a dial gauge ①, as shown.

Front disc face runout	
Standard	Service limit
0.1 mm (0.004 in)	0.30 mm (0.012 in)

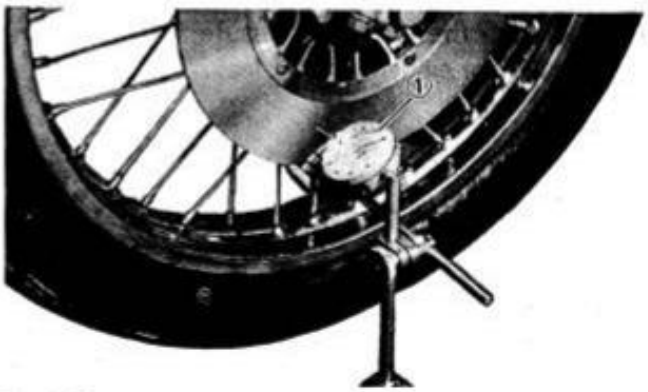

Fig. 3-42

3. Check the wheel bearings in the usual manner by spinning in the wheel hub. Make sure that the bearings spin smoothly without any noise or hitch. If any abnormality was found, extract bearing.
4. Visually inspect the wheel hub bore, from which the bearings have been extracted, for evidence of abnormal wear caused possibly by the creeping, if any, of bearing outer races.

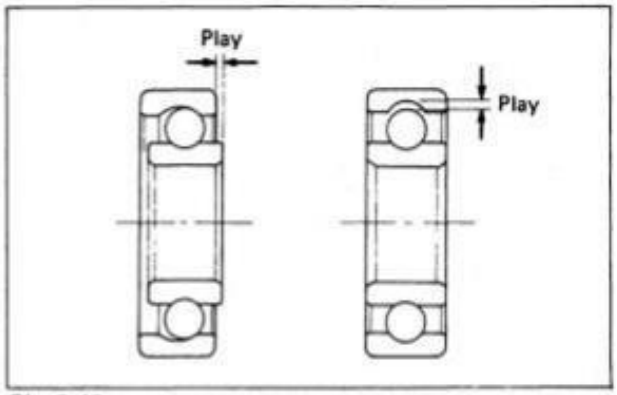

Fig. 3-43

5. Check the axle shaft ① for runout and replace it if it exhibits a runout, as measured with a dial gauge ②, in excess of the limit.

Front axle shaft runout	
Standard	Service limit
0.15 mm (0.006 in)	0.25 mm (0.010 in)

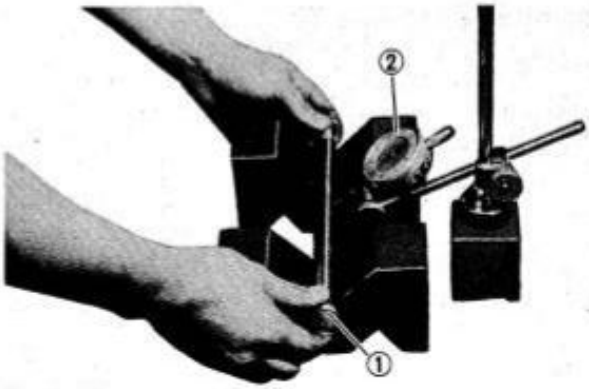

Fig. 3-44

6. Check the spokes for tightness, distortion and damage.
7. Inspect the tire for wear and damage; and check the tire tread depth as shown. Replace a badly worn or damaged tire. A tire with its tread worn down to the limit (in terms of tread depth) must be replaced.

	Service limit
Front	1.6 mm (0.06 in)
Rear	2.0 mm (0.08 in)

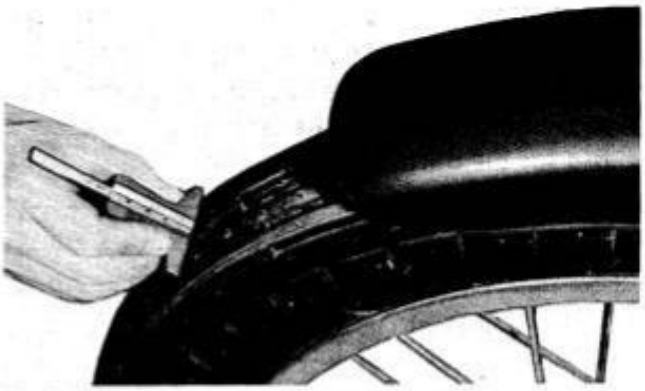

Fig. 3-45

8. Check the tire inflating pressure, and examine the valve for evidence of air leakage.

TIRE INFLATION PRESSURE MODEL GS550		SOLO RIDING		DUAL RIDING	
		KG/CM²	LB/IN²	KG/CM²	LB/IN²
NORMAL RIDING	FRONT	1.75	25	1.75	25
	REAR	2.0	28	2.25	32
CONTINUOUS HIGH SPEED RIDING	FRONT	2.0	28	2.0	28
	REAR	2.25	32	2.8	40
TIRE SIZE: FRONT 3.25H19-4PR REAR 3.75H18-4PR					
* TIRE PRESSURE SHOULD BE MEASURED WHEN TIRE IS IN COLD CONDITION					

Fig. 3-46

9. Check the wheel rim for side runout. Put the dial gauge ① spindle horizontally to the rim ② .

Front wheel rim runout	
Axial & Radial	2.0 mm (0.08 in)

10. Spin the wheel (complete with the brake disc) in free state to check its dynamic balance. Use a 20-gram or 30-gram balancing piece ①, as necessary. Be sure that the wheel comes to its natural halt not in a particular position but in any position through several trials.

Wheel balancer	
Weight	Part Number
20 grams (0.04 lbs)	55411-11000
30 grams (0.07 lbs)	55412-11000

NOTE: Remember the dynamic balance breaks when the tire is replaced or replaced after flattening: the wheel must be rebalanced each time its mass is altered.

REASSEMBLY

1. Reassemble and remount the front wheel by reversing the sequential order of removal and disassembly and also by carrying out the follw-ing steps:
2. Use the special tool ① to install the wheel bearing of the speedometer gearbox side first. Then install the other bearing while holding the gearbox side bearing.

NOTE: Have the bore filled with grease before driving in the bearing with the special tool.

09913-80112	Bearing and oil seal installer

3. Make sure that the brake disc is clean and free of any greasy matter. After securing it in place by tightening its bolts, be sure to lock each bolt by bending up the lock washer ① tongue positively.

Fig. 3-47

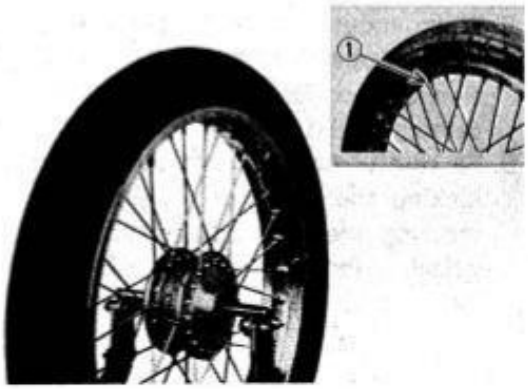

Fig. 3-48

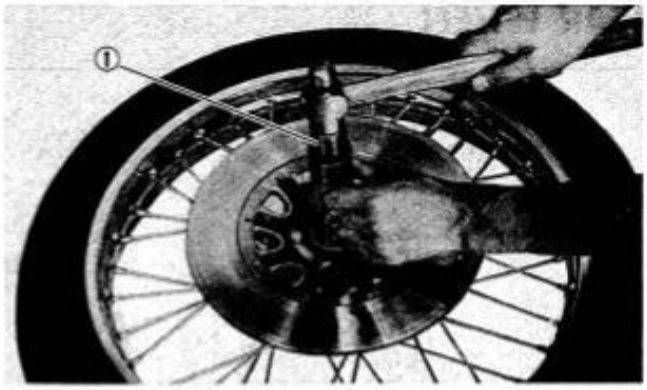

Fig. 3-49

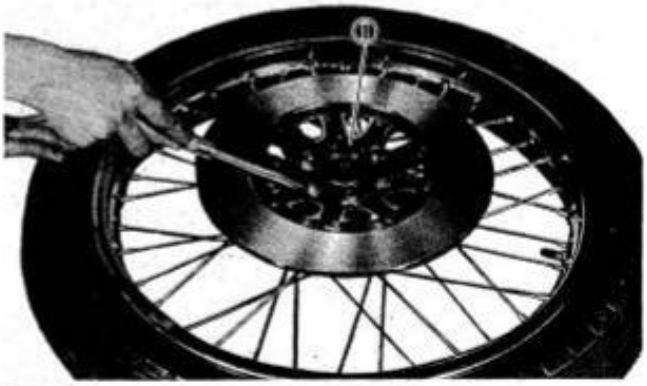

Fig. 3-50

4. Before installing the speedometer gear box ①, grease it and aim its groove ② (for fitting to the hub of two drive pawls) to the hub to insert the gear box to the wheel side.

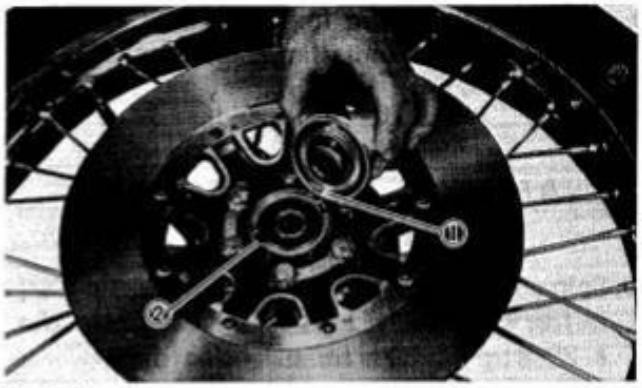

Fig. 3-51

5. When mounting the wheel, check to be sure that the speedometer gearbox ① is in the position shown. Secure the gearbox in the indicated position.
6. Be careful not to leave out the cotter pin for locking the axle nut. As to the method of securing the axle holders after mounting the wheel, refer to the illustration given in page 94.

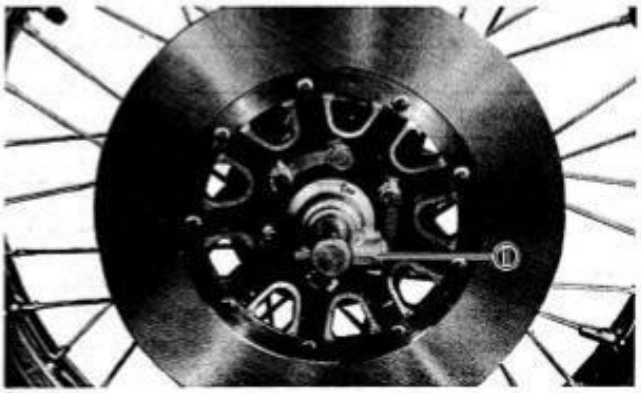

Fig. 3-52

REAR WHEEL

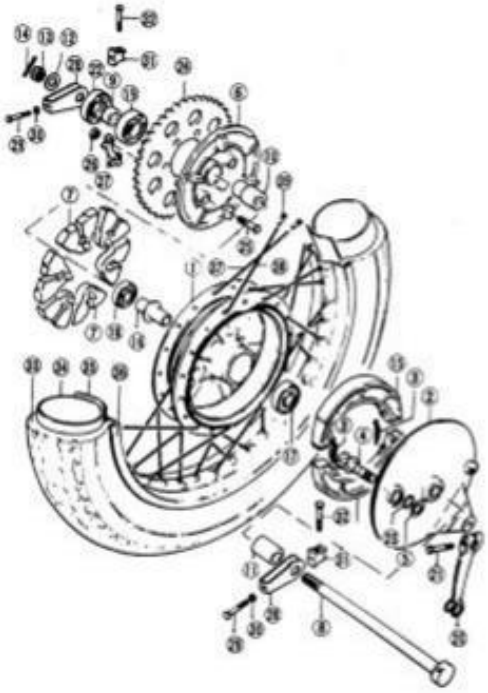

① Rear wheel hub drum
② Panel
③ Spring
④ Brake cam
⑤ Washer
⑥ Sprocket mounting drum
⑦ Rear drum shock absorber
⑧ Rear axle
⑨ Spacer
⑩ Sprocket drum retainer
⑪ Spacer
⑫ Washer
⑬ Nut
⑭ Cotter pin
⑮ Brake shoe
⑯ Bearing spacer
⑰ Bearing
⑱ Bearing
⑲ Bearing
⑳ Brake cam lever
㉑ Bolt
㉒ Oil seal
㉓ O ring
㉔ Rear sprocket
㉕ Bolt
㉖ Nut
㉗ Lock washer
㉘ Chain adjuster
㉙ Bolt
㉚ Nut
㉛ Chain adjuster support
㉜ Bolt
㉝ Tire
㉞ Inner tube
㉟ Inner tube protector
㊱ Rim
㊲ Spoke
㊳ Spoke
㊴ Spoke nipple

Fig. 3-53

DISASSEMBLY

1. Take down the two mufflers to facilitate this disassembly work.
2. Remove brake rod ① and torque link ② from brake panel.

Torque link Tightening torque	2.0 - 2.5 kg-m (14.5 - 18.0 lb-ft)

3. Pull off cotter pin ③ and remove axle nut ④. Draw out the axle shaft.

Tightening torque	9.0 - 11.0 kg-m (65.0 - 80.0 lb-ft)

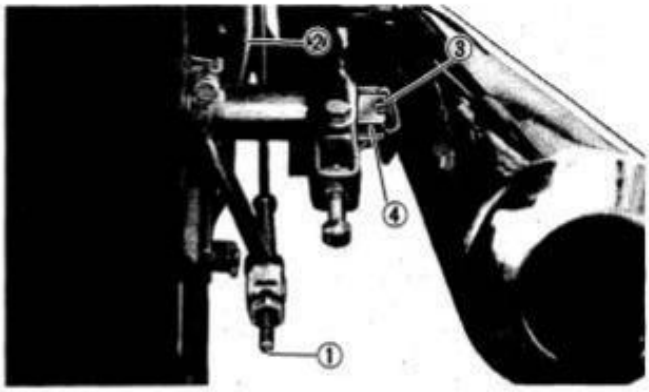

Fig. 3-54

4. Remove from rear wheel the drive chain together with sprocket mounting drum ①.

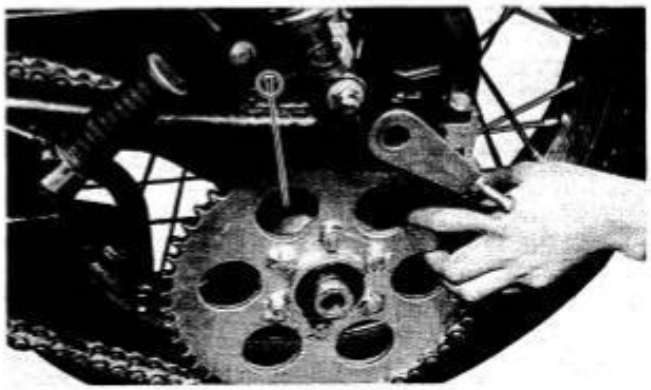
Fig. 3-55

5. Separate sprocket from the drum by removing the 6 nuts ①.

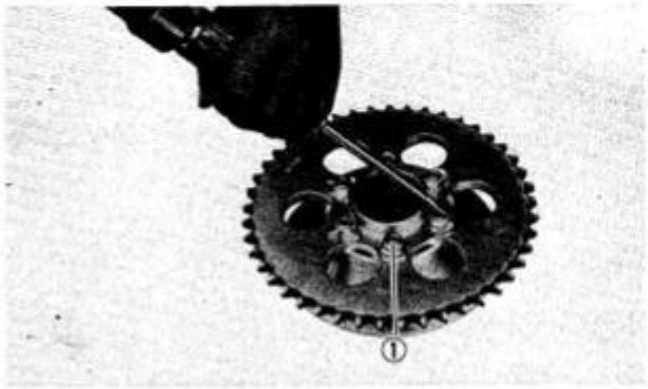

Fig. 3-56

6. Using the pullers ① (special tools), remove oil seal and bearing from the sprocket drum.

09913-50110	Oil seal remover
09913-80112	Bearing and oil seal installer

NOTE: The removed bearing should be replaced.

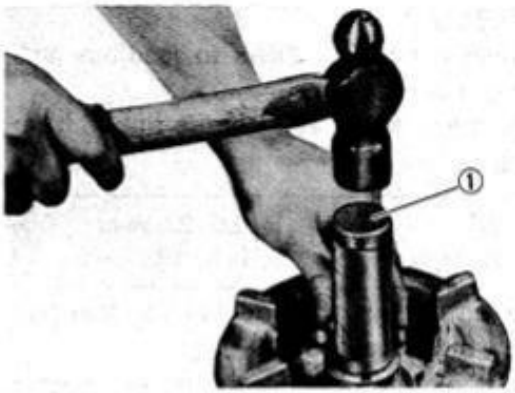

Fig. 3-57

Rear brake panel

1. Spread out brake shoes ①, and take the shoes off, complete with shoe springs.

NOTE: Handle shoes with clean hands. Be careful not to smear shoe linings with greasy matter.

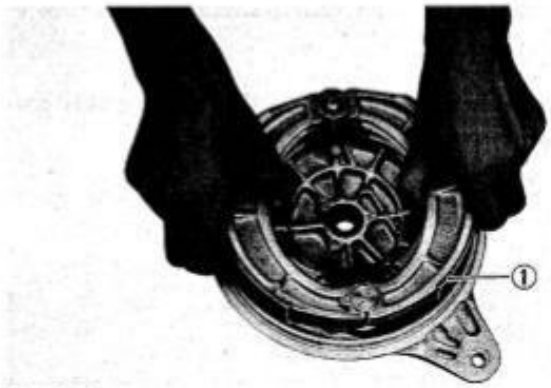

Fig. 3-58

2. Remove 6-mm bolt ① and take off brake cam lever and cam.

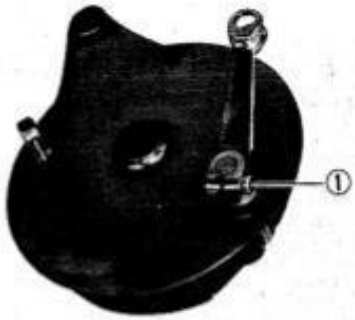

Fig. 3-59

INSPECTION

There is practically no difference between front wheel and rear wheel as far as the items of inspection and checking are concerned. As to the methods and inspection criteria, refer to "INSPECTION, FRONT WHEEL." Items are as follows:

1. Wheel axle shaft for runout
2. Wheel bearing for tightness
3. Wheel rim for wobble and damage
4. Spokes and nipples for tightness, bend and damage
5. Sprocket for wear and damage
6. Tire for wear and damage
7. Tire inflating pressure (see page regarding front wheel)
8. Brake panel for cracks and other kinds of damage.
9. Hub drum, brake shoes and cam for wear

Brake hub drum I.D.	
Standard	Service limit
180 mm (7.09 in)	180.7 mm (7.11 in)

Brake shoe lining thickness	
Standard	Service limit
4.0 mm (0.16 in)	2.0 mm (0.08 in)

10. Brake cam lever and cam serrations for wear
11. Sprocket mounting drum cushion for elastic strength

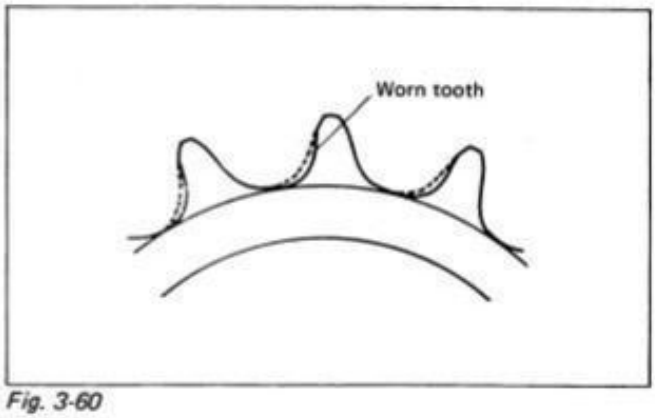

Fig. 3-60

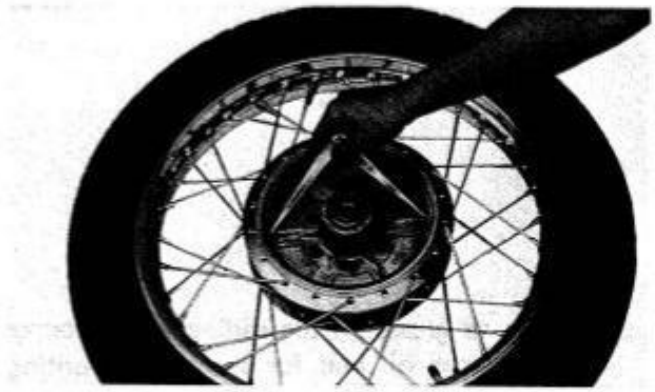

Fig. 3-61

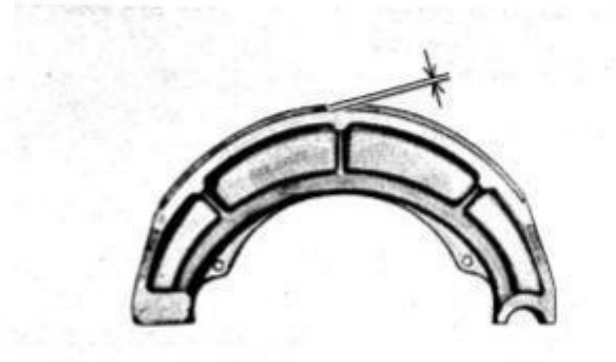

Fig. 3-62

REASSEMBLY

Reverse the disassembling procedure. Make sure that brake shoes, hub drum bore and other brake parts are clean from dust and grease; and adhere to the following instructions:

1. To install the ball bearing, grease the bearing and hub in advance. Put in the spacer first, and fit the bearing as shown.

09913-80112	Bearing and oil seal installer ①

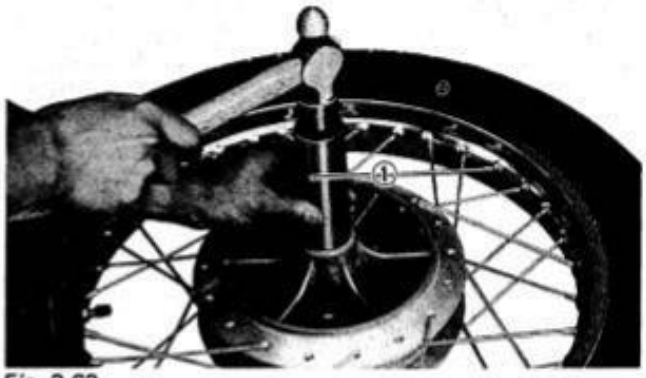

Fig. 3-63

2. After securing the sprocket, be sure to lock the 6 nuts positively by bending the tongues of washer ① firmly against the flats of nuts.

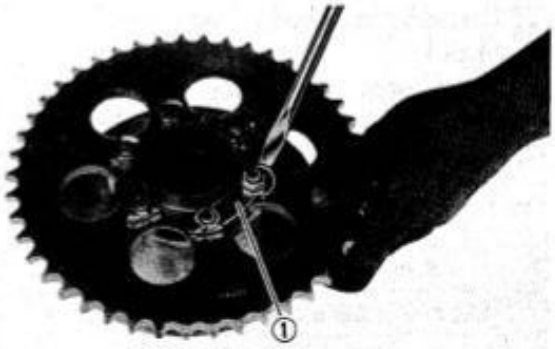

Fig. 3-64

3. Be sure to grease ① the sliding face of brake cam and the oil seal for sprocket mounting drum.

NOTE: Make sure the shoe linings and drum surface are absolutely free of greasy stains. Slipping brake is usually due to sloppy handling of these parts at the time of reassembly.

Fig. 3-65

4. When installing brake hub panel and sprocket mounting drum on the wheel hub, be sure to have the drive chain passed around the sprocket in advance. Also, make bolts and nuts snug-tight: tighten them later when adjusting the chain for proper tension.

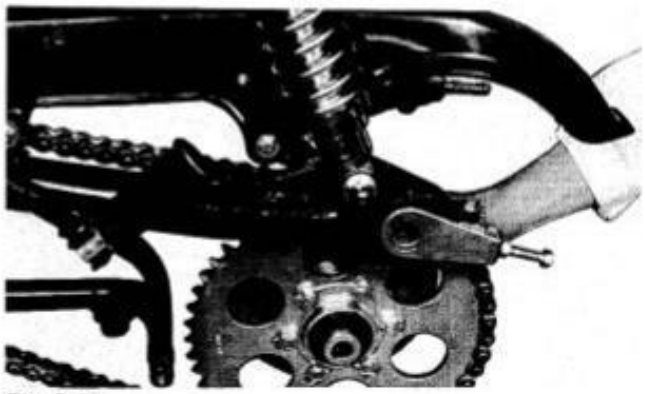
Fig. 3-66

The reassembly work is completed by adjusting 1. chain tension, 2. wheel alignment, 3. brake pedal height and 4. pedal play.

1. Set the two chain adjusters, right and left, equally in such a way that the drive chain will have a prescribed amount of sag at the portion indicated.

Drive chain sag	20 – 30 mm (0.8 – 1.2 in)

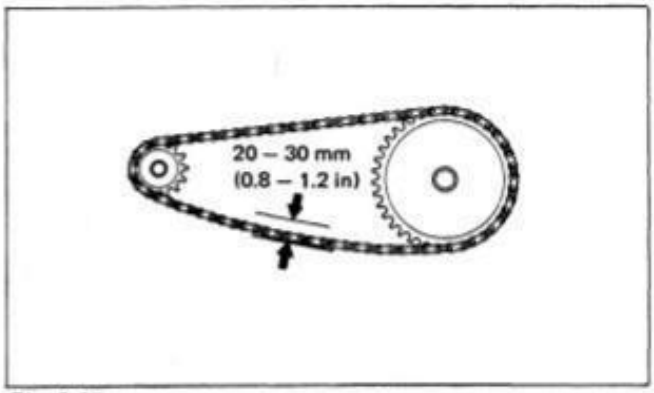

Fig. 3-67

2. Check to be sure that front and rear wheels are in proper alignment, and, as necessary, adjust the alignment outlined in page 121.

Fig. 3-68

3. Set the brake pedal at its proper position for comfortable riding. This is effected by turning **the adjusting bolt ①. Be sure to tighten the** lock nut ② good and hard after setting the bolt.

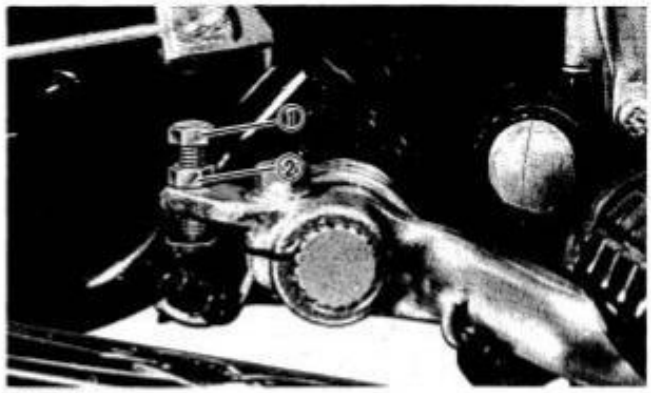

Fig. 3-69

4. By repositioning the adjusting **nut** on brake rod, set the pedal play to between 20 and **30 mm (0.8 – 1.2 in) ① as measured at pedal tip. Check to be sure that rear brake lamp comes on when the pedal is depressed to take up the play.**

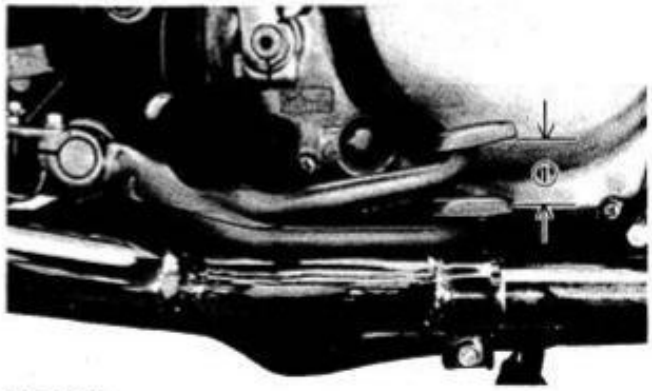

Fig. 3-70

DRIVE CHAIN

The drive chain used in the Model GS550 is of high-durability endless type having 108 links with bushes hermetically containing grease. It is either of DAIDO make (DID 50HDL) or of TAKASAGO make (RK 50SHO), designed to retain the highest stainable reliability demanded of this critical component.

CAUTION: This long-life chain should be treated as an expendable item. Never attempt to shorten its length by removing one or more links. If the chain is found to have stretched abnormally or beyond the limit (indicated below), replace it by a new one.

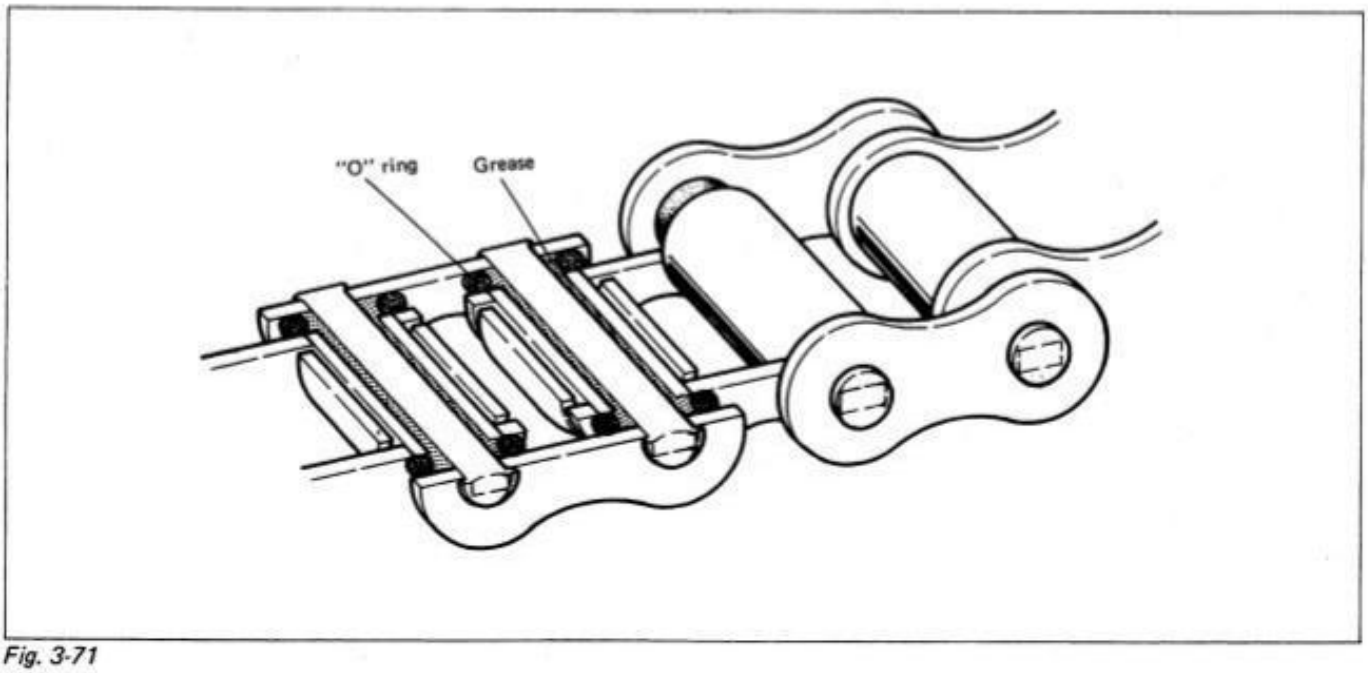

Fig. 3-71

1. Visually inspect the engine sprocket, rear sprocket and drive chain for wear and also for signs of abnormal condition. These are safety components and should be promptly replaced of any flaw is noted.

   The service limit on the chain in terms of elongation is spesified. Check the chain as follows:
   ① Tension the drive chain in place fully by tightening the adjustors.
   ② Using a caliper rule, measure the center-to-center distance between two pins 20 pitches apart (including 19 pins in between the two).

20-pitch length of drive chain	
Standard	Service limit
317.1 - 317.7 mm (12.48 - 12.51 in)	320.0 mm (12.60 in)

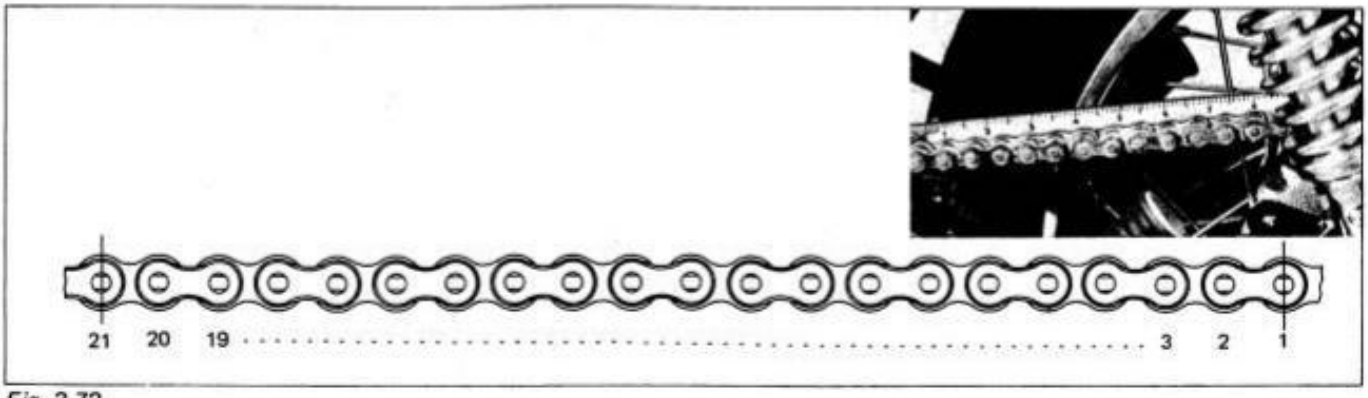

Fig. 3-72

2. Clean and lubricate the drive chain as follows:

NOTE: The bushes do not require relubrication as they contain grease hermetically. The chain rollers, however, must be greased at regular intervals to minimize their wear due to their sliding contact with sprocket teeth.

Washing

At intervals of 1 000 km (600 miles), wash and clean the chain with kerosenne. Do not use gasoline or any similar solvent or the grease in the bushes will become adversely affected. Washing should be effected at shorter intervals if the chain is noted to rust sooner than is anticipated.

NOTE: Remember, the "O" rings fitted to the bushes of the chain are vulnerable to any high-power solvent, including gasoline, benzene and trichlene.

Relubrication

After washing and drying the chain, apply a high-viscosity motor oil to the chain rollers. A so-called "chain lube oil" commonly sold in gas stations should not be used since it could be harmful to the "O" rings.

SWINGING ARM

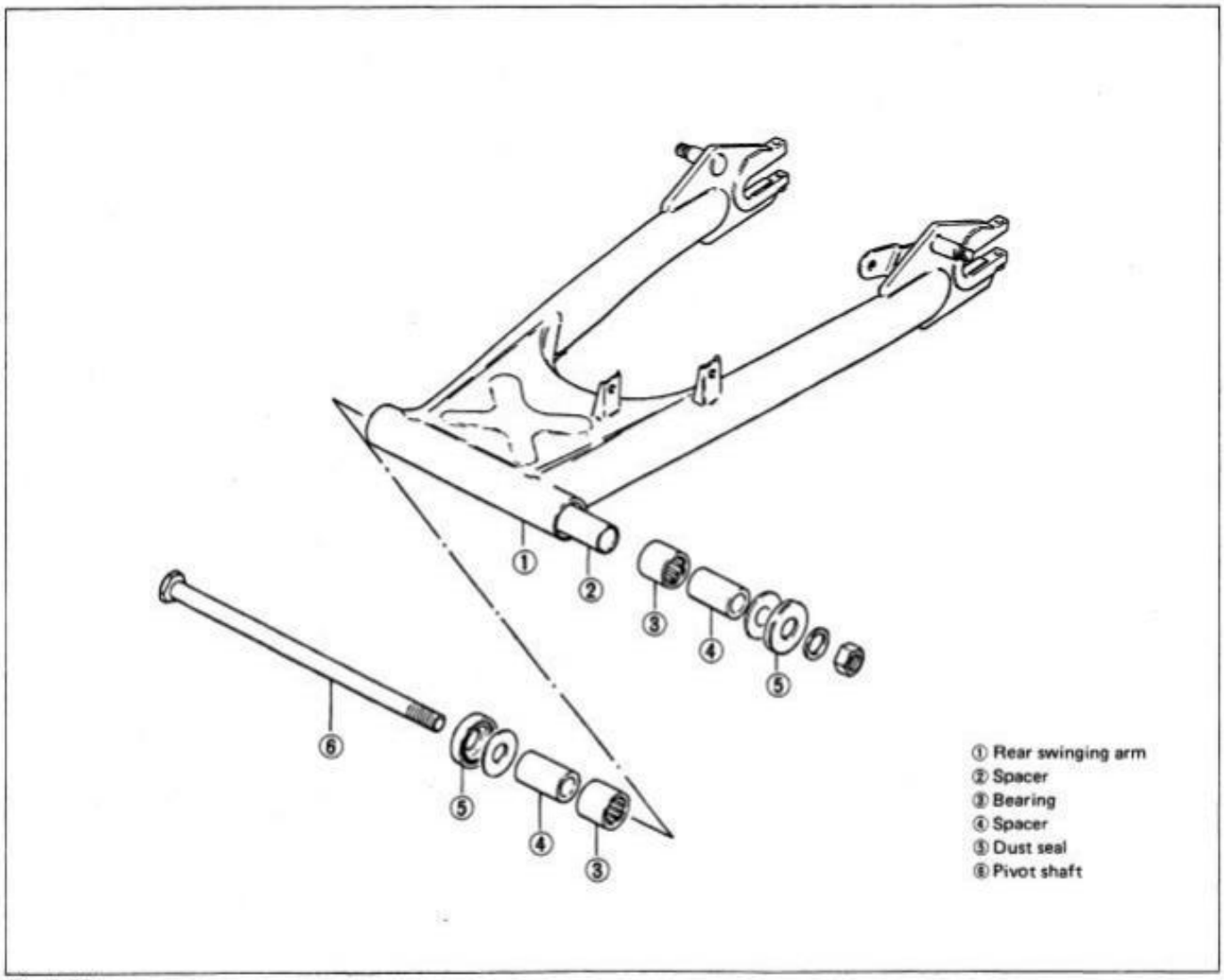

Fig. 3-73

DISASSEMBLY

After removing the rear wheel, proceed as follows:

1. Remove front steps, right and left, mufflers and brake pedal.

Tightening torque: 10 mm bolt	2.7 - 4.3 kg-m (19.5 - 31.0 lb-ft)

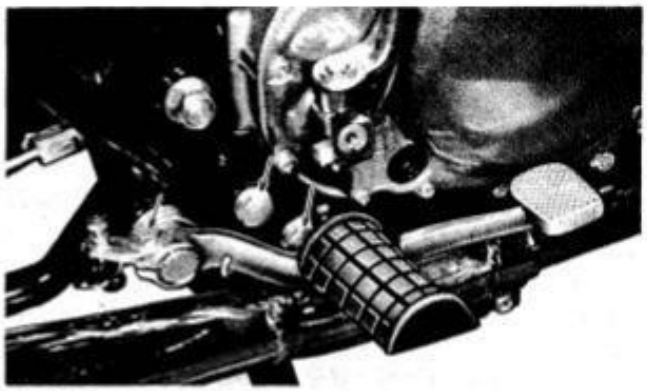

Fig. 3-74

2. Remove rear suspension units, right and left: removing the two nuts ①, top and bottom, allows the suspension unit to come off.

Tightening torque	2.0 - 3.0 kg-m (14.5 - 21.5 lb-ft)

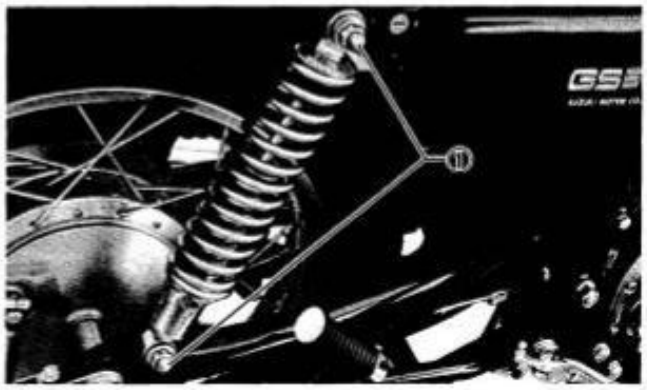

Fig. 3-75

3. Draw out the pivot shaft ①, and remove the swinging arm ②.

Tightening torque	5.0 - 8.0 kg-m (36.0 - 58.0 lb-ft)

Fig. 3-76

Swinging arm bearings

Use the special tool ① to remove the right and left bearings of the swinging arm.

NOTE: Discard the removed bearings. Use replacement bearings in reassembly.

09941-44510	Swinging arm bearing remover

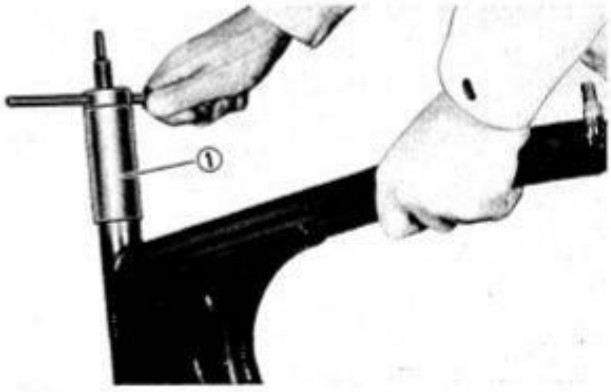

Fig. 3-77

INSPECTION

Inspect and check for these items:

1. Swinging arm for distortion and damage.
2. Bearings for rattle (due to excessive wear of needle roller).
3. Pivot shaft for distortion and wear.
4. Bearing dust seal cap for distortion.

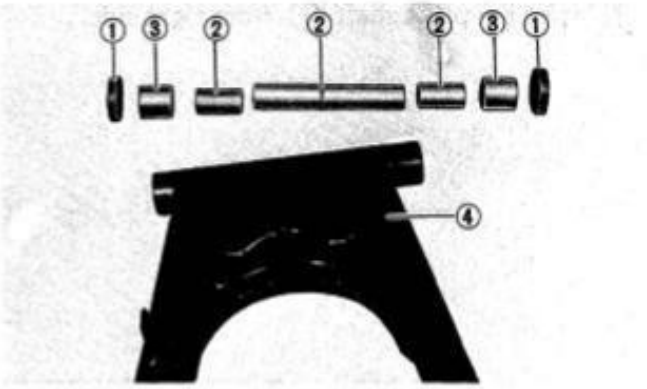

Fig. 3-78 ①Dust seal cover, ②Spacer ③Bearing, ④Swinging arm

REASSEMBLY

Reassembly is reverse of disassembly, but the following instructions must be adhered to:

1. Install the right and left bearings by using the special tool ① in the manner shown. Be sure to have the bore cleaned by wiping, and apply oil to the periphery of each bearing before installing it. Remember, the punch-marked side of the bearing ② comes on outer side when the bearing is in place.

09941-34511	Steering inner race and swing arm bearing installer

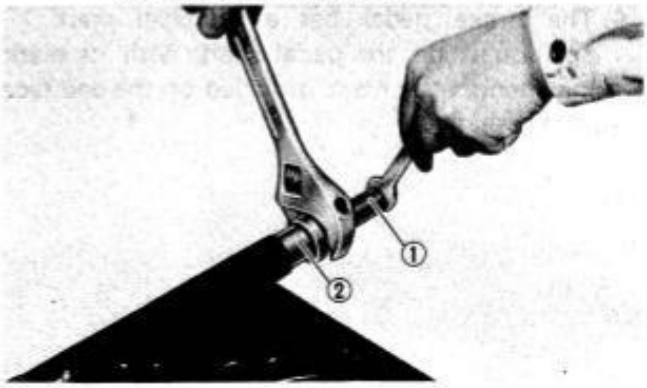

Fig. 3-79

Fig. 3-80

2. A ring will be found fitted to the spacer. Before installing the spacer, remove the ring ①.

NOTE: This ring was fitted originally during manufacture to facilitate the assembling work and does not interfere with or improve the function of the spacer. Its presence on the spacer makes it difficult to operate the special tool.

Fig. 3-81

3. Insert the pivot shaft ① from right side.

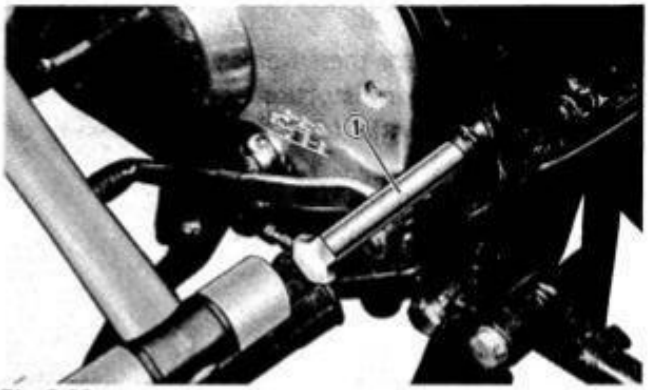

Fig. 3-82

4. The brake pedal has a punched mark ① position it on the pedal shaft, with its mark matched to the mark provided on the end face of this shaft.

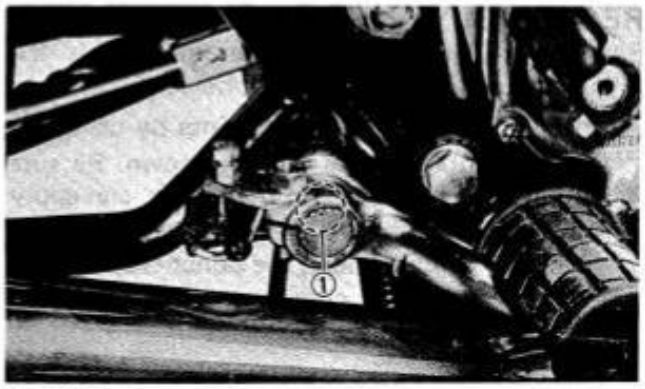

Fig. 3-83

FRONT-BRAKE CALIPER

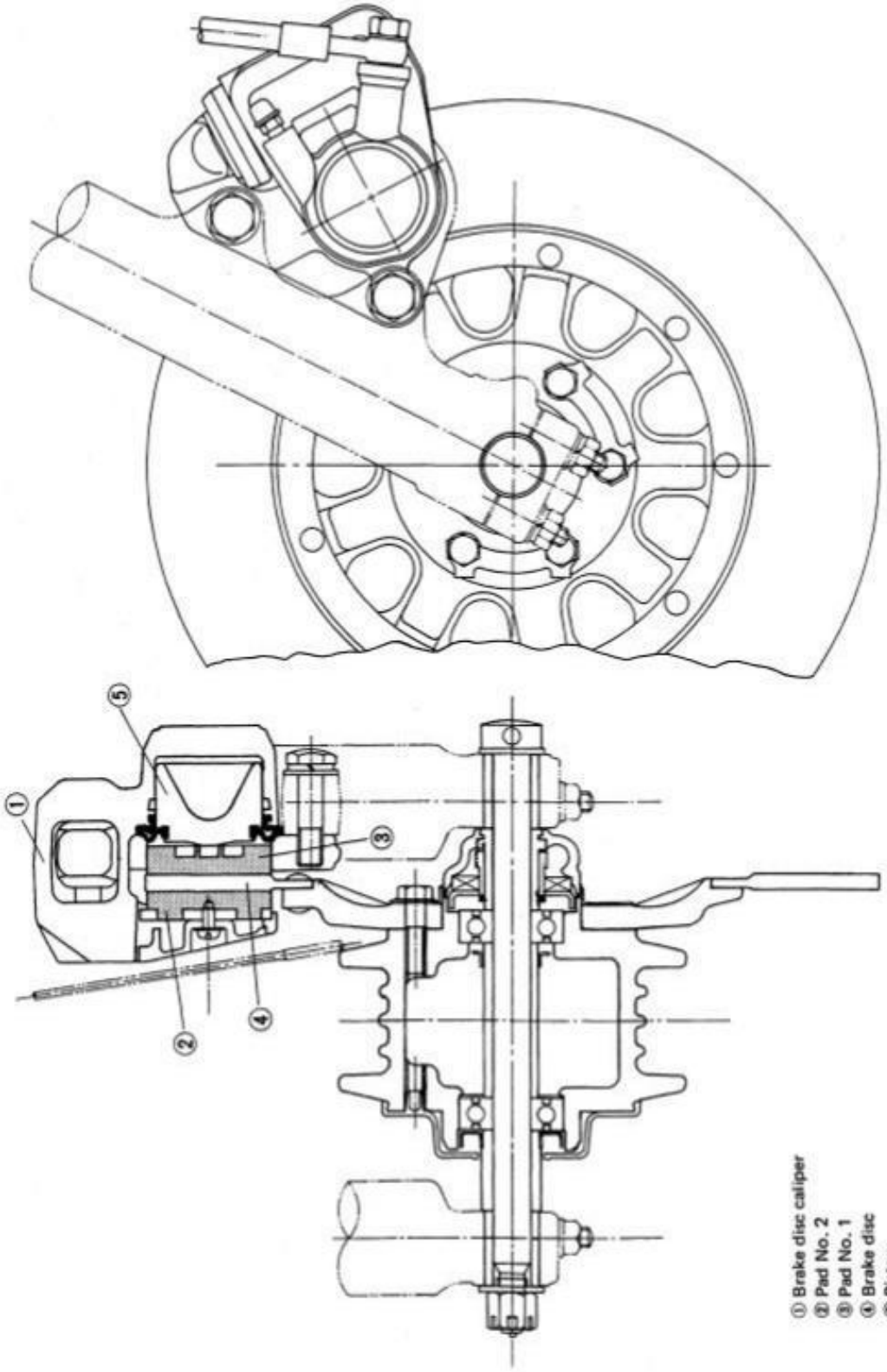

Fig. 3-84

DISASSEMBLY

CAUTION: Take care not to splash the brake oil at the time of removing the caliper assembly.

1. Disconnect brake hose No.2 ① from the caliper, and catch the brake fluid with a proper receptacle. Squeeze the brake lever to let out the fluid.

Fig. 3-85

2. Remove the two mounting bolts ① securing the caliper to the fork. Take off the caliper assembly.

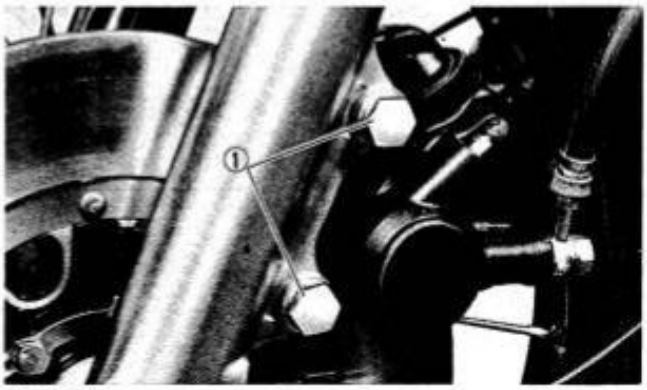

Fig. 3-86

3. Loosen and remove the two caliper axle bolts ①.

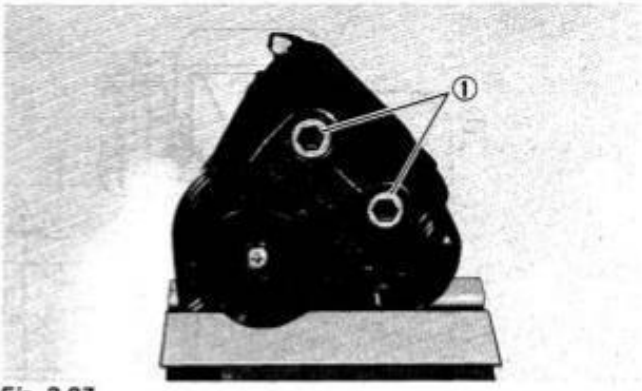

Fig. 3-87

4. Remove the screw ① fastening No.2 pad (stationary) to the caliper body, and take out the pad. Separate the caliper holder from the body.

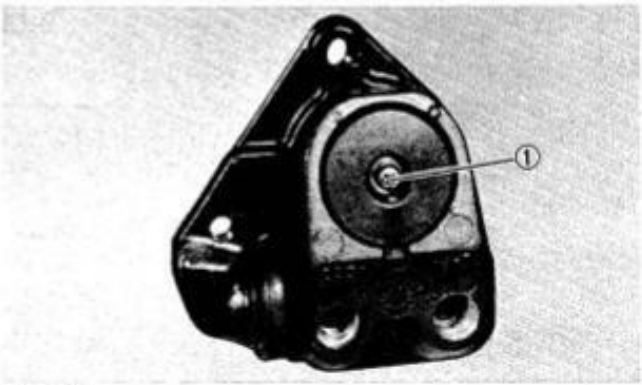

Fig. 3-88

5. Apply compressed air (2 kg/cm², 28 psi) to the internal fluid passage to force each piston out of the bores.

NOTE: Have the piston boot removed to facilitate piston removal.

Fig. 3-89

6. The caliper holder having been removed, take out piston seal, dust seal, piston boot and "O" ring. Wash the piston seal and piston boot clean with fresh brake fluid. Discard the removed dust seal and "O" ring: be sure to use replacement seal and "O" ring in reassembly.

CAUTION: Do not use such a cleaning fluid as trechlene or even gasoline to wash the piston seal and boot.

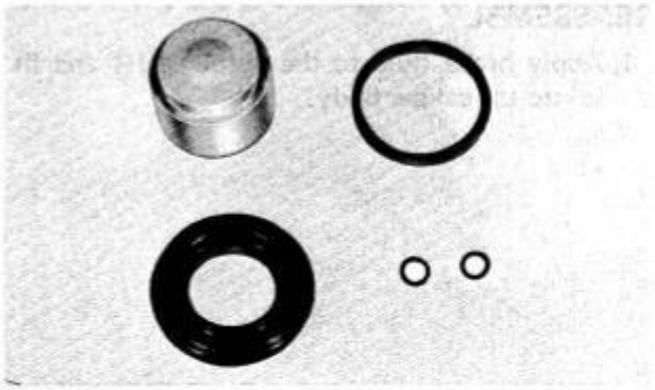

Fig. 3-90

INSPECTION

1. Check brake pads for wear. A pad worn down to the limit (which is the red groove provided on the edge) must be replaced.

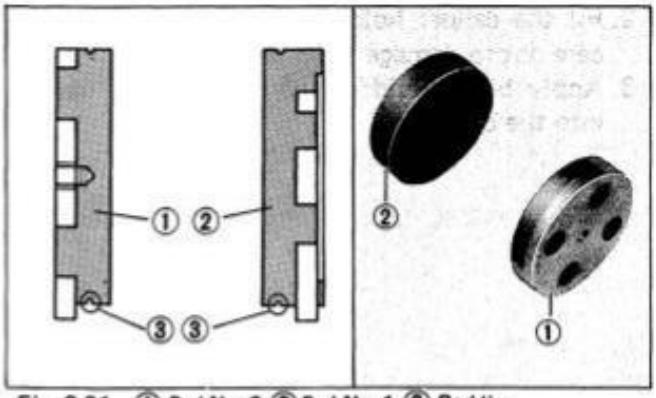

Fig. 3-91 ① Pad No. 2 ② Pad No. 1 ③ Red line

2. Mike the piston and bore to make sure that their diameters are within the limits. Use a cylinder gauge to take the reading on the bore.

Diameter	Standard	Service limit
Bore	42.860 - 42.899 mm (1.6874 - 1.6889 in)	Over 42.999 mm (1.6929 in)
Piston	42.790 - 42.810 mm (1.6846 - 1.6854 in)	Under 42.690 mm (1.6807 in)

Fig. 3-92

3. Inspect the piston seal and boot for wear and damage.
4. Examine the caliper body for damage.

Fig. 3-93

REASSEMBLY

1. Apply brake fluid to the piston seal ① and fit it into the caliper body.

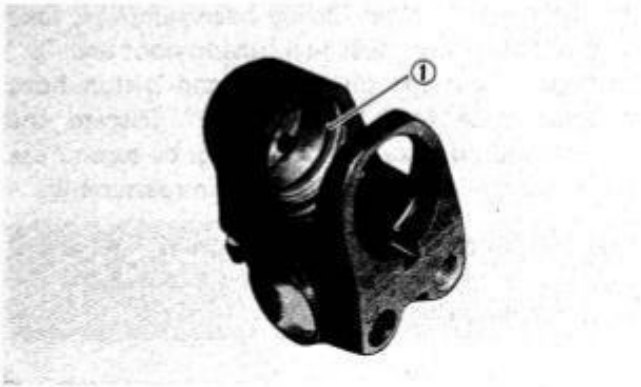

Fig. 3-94

2. Fit the caliper holder ①, to the body, taking care not to damage the dust seal.
3. Apply brake fluid to the piston, and insert it into the bore.

Fig. 3-95

4. Coat the caliper axle bolts ① with SUZUKI PBC grease ②, and install the bolts.
5. Mount the caliper assembly, securing it to the front fork. Check to be sure that the pads are not in an abnormal dragging condition – dragging excessively on the disc.

99000-25110	Suzuki PBC grease

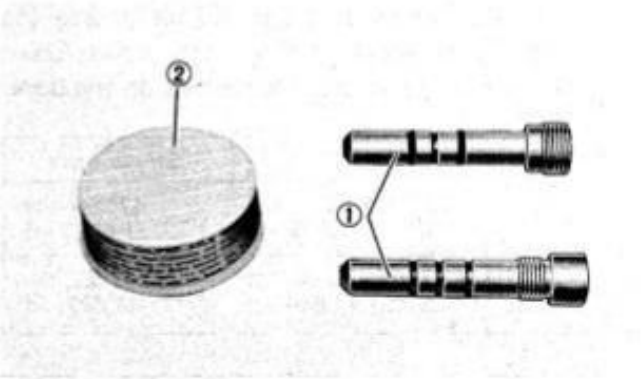

Fig. 3-96

Air bleeding of brake fluid circuit

Air trapped in the fluid circuit acts like a cushion to absorb a large proportion of the pressure developed by the master cylinder and thus interferes with the full braking performance of the caliper brake. Such air is evidenced by the "sponginess" of the brake lever and also by lack of braking force.

Considering the extent of hazard to which the trapped air subjects the machine and rider, it is highly essential that, after remounting the brake and restoring the brake system to the normal condition, the brake fluid circuit be purged of air in the follwing manner:

1. Fill up the master cylinder reservoir ① to "UPPER" level line. Put on the reservoir cap to prevent entry of dirt.

Fig. 3-97

2. Tie a pipe to the caliper bleeder valve. Insert the free end of the pipe into a receptacle.

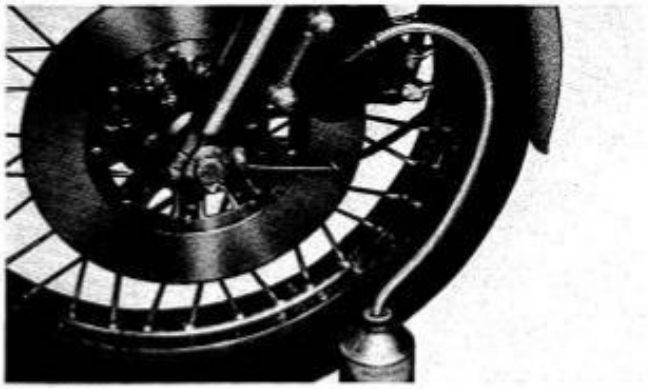

Fig. 3-98

3. Squeeze and release the brake lever several times in rapid succession, and squeeze the lever fully without releasing it. Loosen the bleeder valve by turning it one-quarter rotation or so, spilling the brake fluid into the receptacle; this will cause the brake lever to yield and touch the handle grip. Then, close the valve, pump and squeeze the lever, and open the valve. Repeat this process until the oil flowing into the receptacle ceases to carry air bubbles.

NOTE: Replenish the brake fluid reservoir as necessary while carrying out this bleeding step. Be sure that there is always some fluid visible in the reservoir.

4. Close the bleeder valve, disconnect the pipe. Fill up the reservoir to "UPPER" level line.

CAUTION: Handle the brake fluid with care: the fluid is chemically react to the paint coat, plastics, rubbery substances and the like.

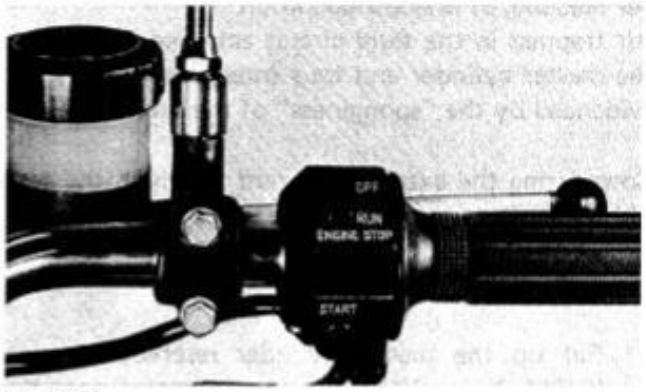

Fig. 3-99

5. Check to be sure that the brake lever has a play of 15 – 20 mm ① (0.6 – 1.0 in) as measured as its tip.

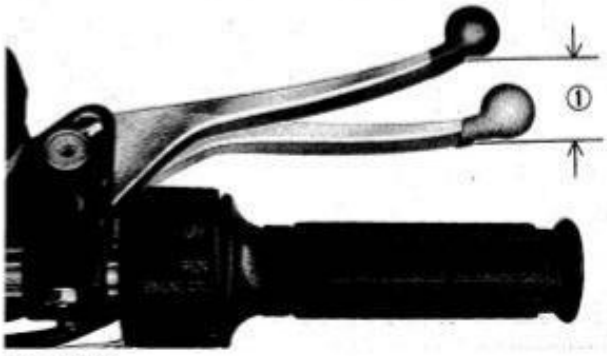

Fig. 3-100

MASTER CYLINDER

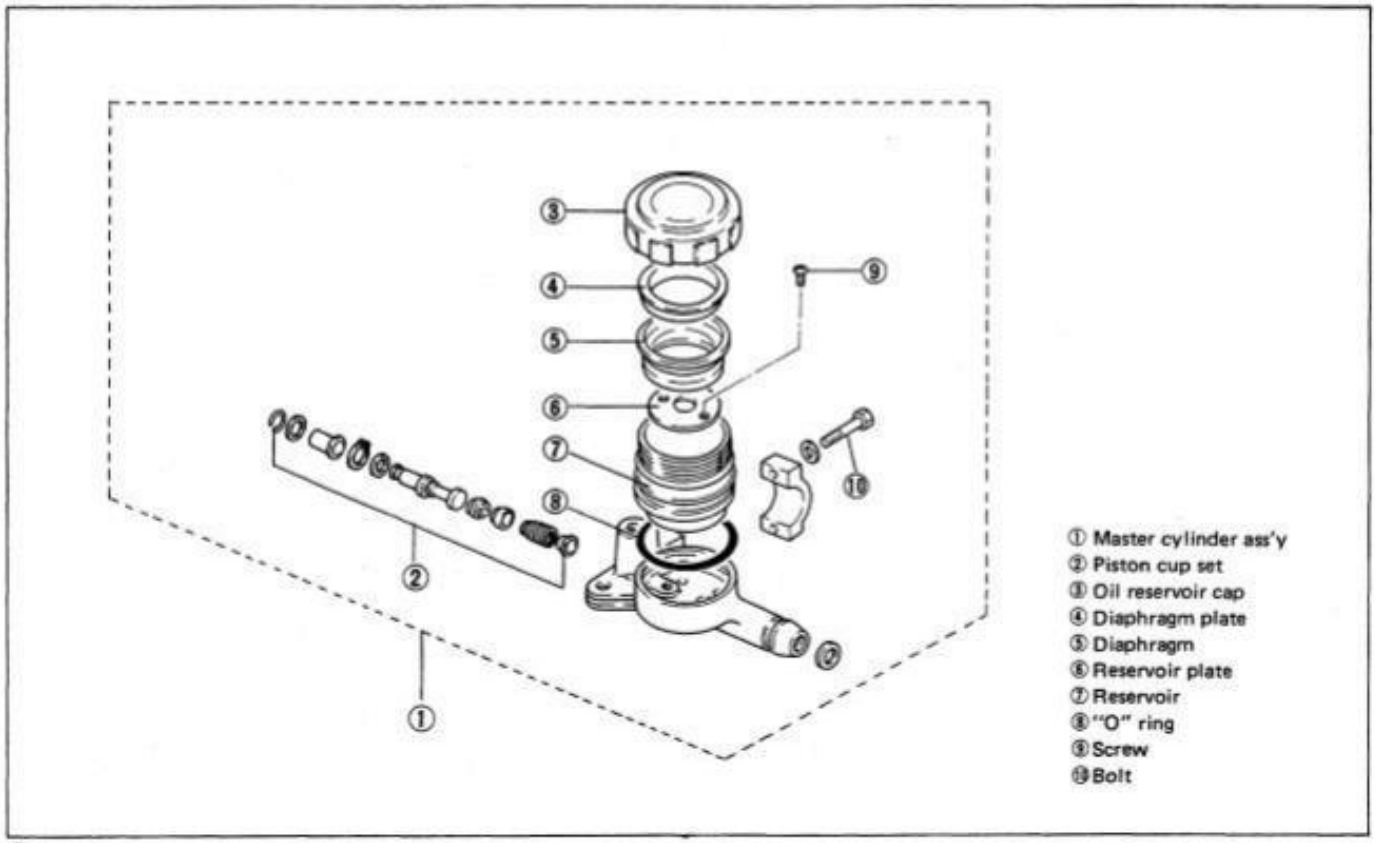

Fig. 3-101

DISASSEMBLY

1. Remove the front brake lever: pull off the cotter pin and remove the nut to free the lever for removal.
2. Remove the boot. Pick out the circlip from the bore of master cylinder with the special tool ①.

09900-06105	Special circlip opener

NOTE: Scrap the removed boot. Use a replacement boot in reassembly.

3. Take out piston, check valve, coil spring and primary cup from the bore.

NOTE: Using a wood or soft-metal stick, push out the check valve, coil spring and primary cup. Be careful not to scratch the bore wall.

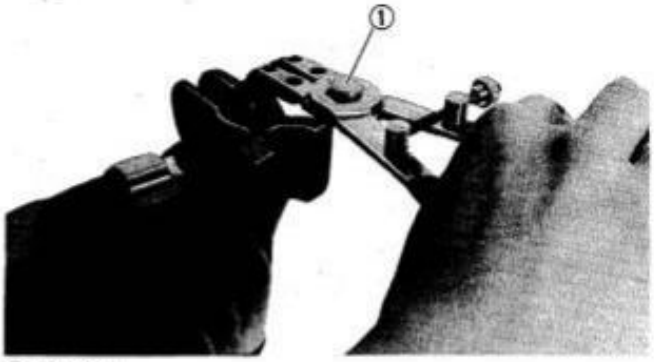

Fig. 3-102

Fig. 3-103

4. Remove the two screws ① securing the reservoir to the master cylinder body, and take off the "O" ring from the body.

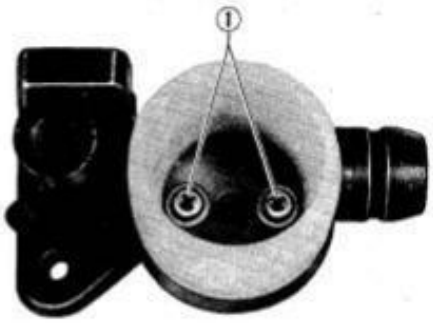

Fig. 3-104

INSPECTION

1. Mike the cylinder bore and piston to see whether these diameters are within the limits. Replace the cylinder or piston or both if the limit is exceeded.

Diameter	Standard	Service limit
Bore	13.900 - 14.043 mm (0.5472 - 0.5529 in)	Over 14.070 mm (0.5547 in)
Piston	13.941 - 13.968 mm (0.5489 - 0.5499 in)	Under 13.920 mm (0.5480 in)

Fig. 3-105

Fig. 3-106

2. Check the fit of the reservoir with the cylinder body. If any signs of fluid was noted at the time of disassembly, replace the "O" ring by which this fit is sealed.
3. Inspect the primary cup for wear and damage, and replace it by a new one as necessary.

Fig. 3-107

REASSEMBLY

Reassemble the master cylinder by reversing the sequential steps of disassembly and by taking the following additional steps:

1. Apply brake fluid to the cylinder bore and all the internals to be inserted into the bore.
2. Do not attempt to insert one internal after another into the bore; assemble the primary cup, coil spring and check valve together, and insert this combination into the bore, taking care not to allow the check valve to become cocked or to unseat the coil spring as it goes into the bore.
3. It is a good practice, though not mandatory, to use a replacement primary cup in re-assembly.
4. After fitting the circlip, try to turn it in place to make sure it is snugly seated in the groove. Use of a replacement circlip is preferred to re-using the circlip removed in disassembly.

09900-06105	Special circlip opener

Fig. 3-108

Fig. 3-109

5. Reconnect the brake lever to the master cylinder before mounting the master cylinder on the handlebar.

CAUTION: Be sure to secure a clearance of about 2 mm ① between the right-hand handle switch and the master cylinder.

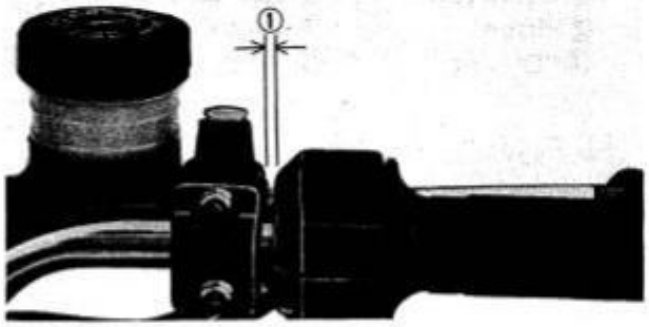

Fig. 3-110

6. Refer to the illustration to reconnect the brake hose to the master cylinder.
7. After filling up the brake fluid reservoir, be sure to carry out an air bleeding operation as outlined in CALIPER.

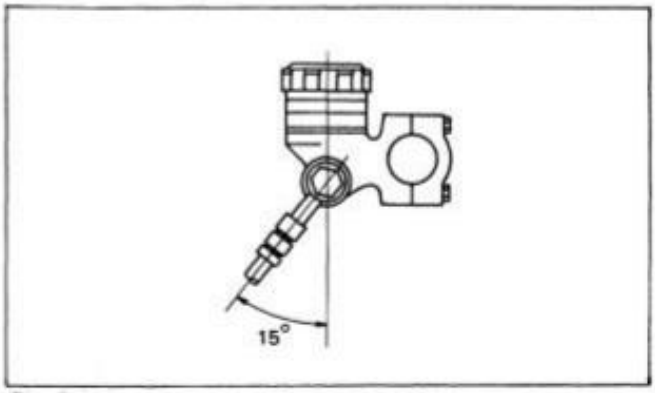

Fig. 3-111

BRAKE PARTS TO BE PERIODICALLY REPLACED

Brakes are critical safety components and must be maintained in best operable condition at all times. In keeping with this view, the following brake parts of the Model GS550 are prescribed to be renewed periodically (at intervals of two years), all at the same time, by replacement.

The parts named are subject to wear or deterioration but may continue to work satisfactorily much longer beyond the two-year interval. Experience, however, tells that replacement after each two years is justified from standpoints of safety and economy. Adherence to this rule is strongly recommended.

Replacement interval: Two years

1. Components of master cylinder assembly (Use Suzuki Genuine Parts: Master cylinder cup set)

① Boot stopper
② Circlip
③ Boot plate
④ Boot
⑤ Spring
⑥ Primary cup
⑦ Piston

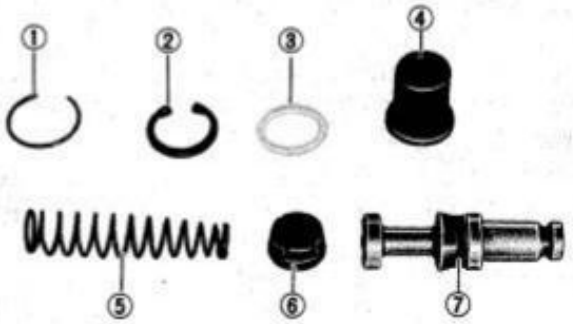

Fig. 3-112

2. Component of caliper assembly
(Use Suzuki Genuine Parts: Pad and piston set)

① Piston boot
② Piston seal
③ Piston
④ "O" ring
⑤ Pad No. 1
⑥ Pad No. 2
⑦ Caliper axle grease
⑧ Holder boot

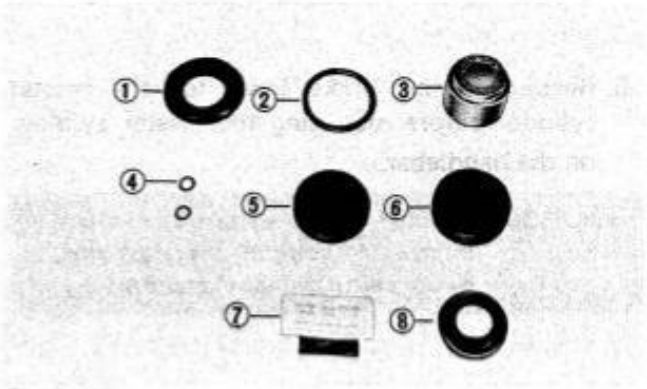

Fig. 3-113

CAUTION: Be sure to wash all component parts in the above sets with clean brake fluid before installing them into the master cylinder or caliper.

RIDING SAFETY INSPECTION GUIDE

The cardinal concern of one servicing the GS550 machines is of course the safety of the rider, pedestrians and other traffic on the road. This truism attaches special importance to some of the inspection and check items prescribed for the periodic inspection and servicing work. Here's a list of those safety-oriented check items and points:

ITEM	CHECK POINTS	WHAT TO DO
WHEEL TIRE	Uneven wear and damage Wear limit: F... 1.6 mm (0.06 in) R... 2.0 mm (0.08 in) Tire pressure: Refer to page 98	For tire **replacement,** use tires of SUZUKI supply.
WHEEL RIM	Distortion Runout limits: **Axial & Radial . . . 2.0 mm (0.08 in)**	Replace defective rims. Reduce the runouts to within the limits by repair **or replacement.**
WHEEL SPOKES	Tightness, distortion and breakage	Retighten loose spokes. Replace badly distorted or broken spokes.
WHEEL BALANCE	Refer to the method outlined in page 99	Use balancer weights, available in two kinds: 20 grams (0.04 lbs) 55411-11000 30 grams (0.07 lbs) 55412-11000
WHEEL ALIGNMENT	Alignment of front and rear wheels Limit: 3 mm (0.1 in) Check with four alignment gauges (09827-00001), two on each rim.	Stretch a twine. Reduce misalignment to within 3 mm (0.1 in) by means of chain adjusters.
	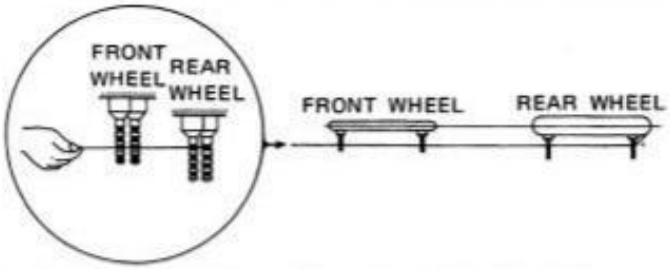 *Fig. 3-114*	
SWINGING ARM	Rattle in the pivot	Check and, as necessary, retighten.
STEERING	Check for rattle with machine supported by main stand to keep front wheel off floor. Adjust steering lock nut so that the handle turned to either side from center will lightly recoil upon meeting the stopper.	Replace brinelled or damaged ball races. Adjust the tightness of steering lock nut. *Fig. 3-115*
ENGINE MOUNT BOLTS AND NUTS	Tightness of bolts and nuts	Refer to TIGHTENING TORQUE SPECIFICATIONS, and retighten as necessary.
FRONT FORK BOLTS	Tightness	Refer to TIGHTENNING TORQUE SPECIFICATIONS, and retighten as necessary.

FRONT AND REAR WHEELS	Bearing rattle Wheel hub wear	Replace bearings rattling excessively. Replace hubs badly or excessively worn down.
AXLES	Tightness	Refer to TIGHTENING TORQUE SPECIFICATIONS, and retighten as necessary.
FRONT AND REAR SUSPENSIONS	Shock absorbing performance	Replace shock absorbing parts as necessary.

TIGHTNING TORQUE SPECIFICATIONS

No.	Item	kg-m	lb-ft	No.	Item	kg-m	lb-ft
①	Front brake master cylinder mounting bolt	0.7	5.0	⑨	Steering stem pinch bolt	2.0	14.5
②	Front brake caliper mounting bolt	3.5	25.5	⑩	Handlebar clamp bolt	1.6	11.5
③	Front fork tube upper pinch nut (right & left)	2.5	18.0	⑪	Brake hose union bolt	1.6	11.5
④	Front fork tube lower pinch bolt (right & left)	2.5	18.0	⑫	Engine mounting bolt (8 mm)	2.0	14.5
⑤	Front axle nut	4.4	32.0	⑬	Engine mounting bolt (10 mm)	3.5	25.5
⑥	Front axle holder nut	2.0	14.5	⑭	Rear swinging arm pivot shaft nut	6.5	47.0
⑦	Front step bolt (10 mm)	3.5	25.5	⑮	Rear shock absorber nut (upper & lower)	2.5	18.0
⑧	Steering stem bolt	4.4	32.0	⑯	Rear brake torque link nut	2.5	18.0
				⑰	Rear brake cam lever bolt	0.7	5.0
				⑱	Rear axle nut	6.5	47.0

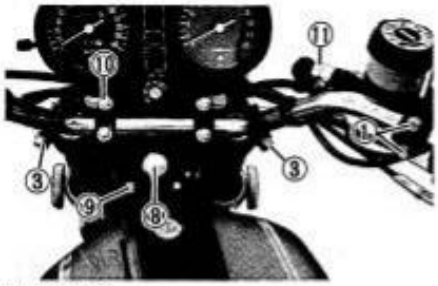

Fig. 3-116

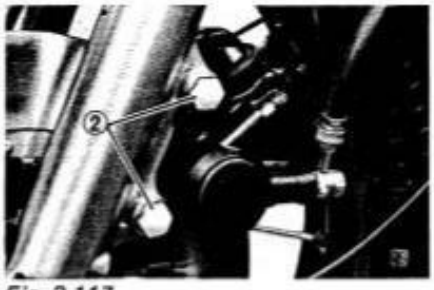

Fig. 3-117

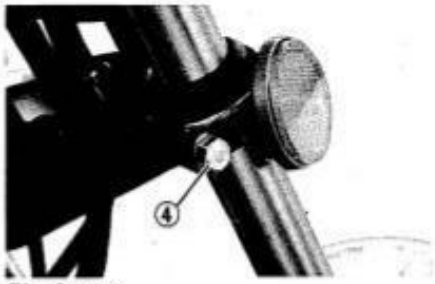

Fig. 3-118

Fig. 3-119

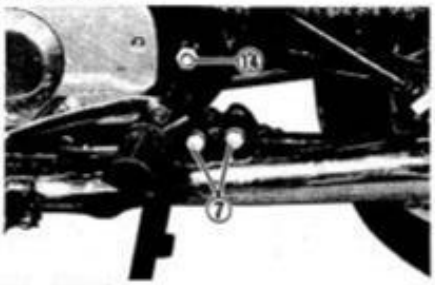

Fig. 3-120

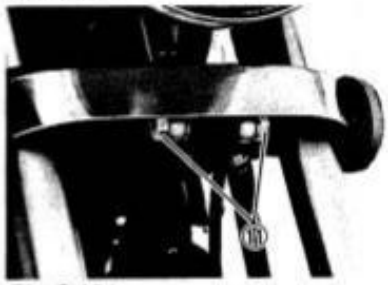

Fig. 3-121

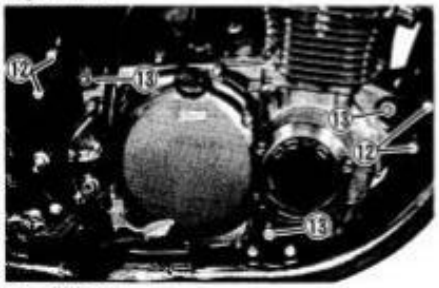

Fig. 3-122

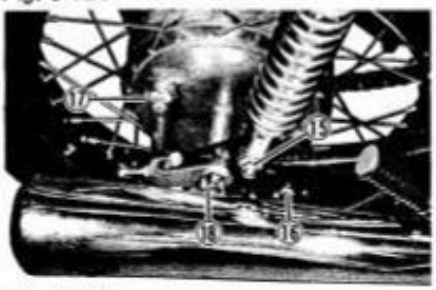

Fig. 3-123

ELECTRICAL EQUIPMENT

GROUP 4

CONTENTS

CHARGING SYSTEM 124
DESCRIPTION 124
INSPECTION 125
STARTING SYSTEM 129
DESCRIPTION 129
INSPECTION 130
BATTERY 132
IGNITION SYSTEM 133
DESCRIPTION 133
INSPECTION 134
UTILITY SWITCHES AND DEVICES 136
IGNITION SWITCH 136
FRONT BRAKE LAMP SWITCH 136
REAR BRAKE LAMP SWITCH 136
LELT HANDLE SWITCH 137
KILL SWITCH AND STARTER SWITCH 138
OIL PRESSURE SWITCH 138
GEARSHIFTING SWITCH AND GEAR POSITION INDICATOR 139
LAMP WATTAGE DATA 139

CHARGING SYSTEM

DESCRIPTION

The major components of the charging system are a three-phase generator, a full-wave rectifier and an SCR voltage regulator. A remotely actuated switch is provided in one of the three-phase output wires of the generator; this switch closes and opens according as the lighting switch is turned on and off by the rider.

Thus, one of the three phases remains out of service when the lighting switch is off as in daytime driving: it is during nighttime driving that the rectifier receives the three-phase output and converts it into a DC output for all electrical loads. With the lighting switch turned off, the rectifier receives a two-phase output.

The voltage regulator is connected between ground and one of the two other output wires and holds down the rectifier output voltage to a predetermined level by passing excess electricity direct to ground.

Charging system diagram

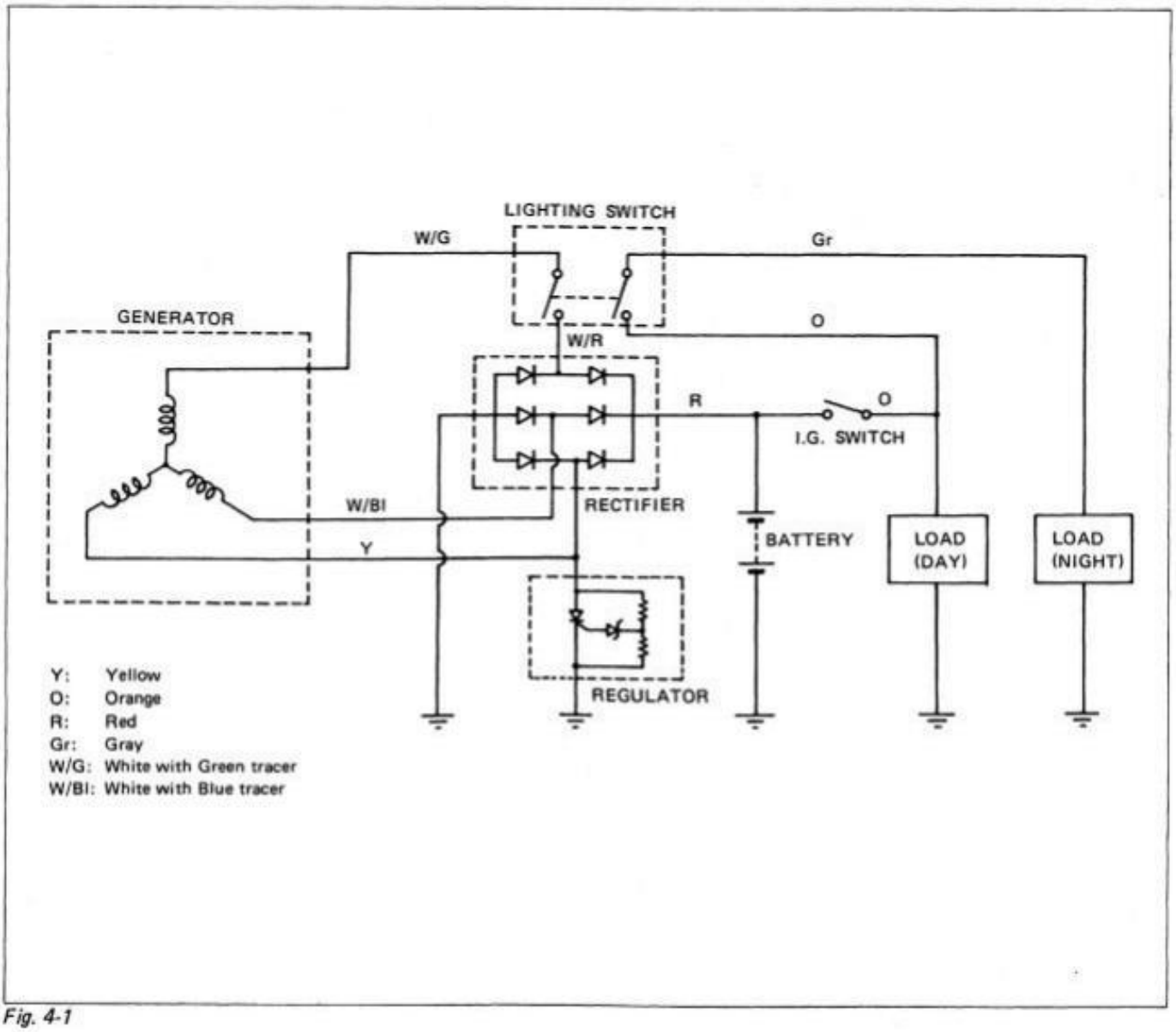

Fig. 4-1

INSPECTION

No-load test

Whether or not the generator-rectifier combination is capable of satisfactory power generation can be told by checking the rectifier output voltage (line voltage) while the generator is run in no-load condition, with the voltage regulator taken out of service. The method is as follows:

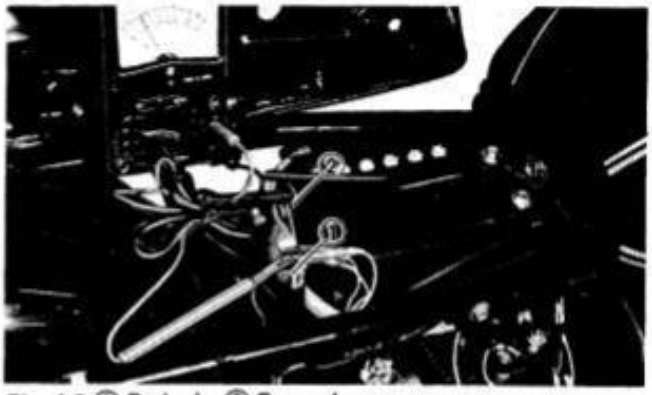

Fig. 4-2 ① Red wire ② Ground

1. Check to be sure that all circuit connections, including ground connections, are tight.
2. Make sure that the battery is in fully charged state.
3. Raise the seat to gain access to the wire harness inside. Modify the three-phase circuit in this manner:

* Undo the coupler of YELLOW wire from the regulator. (This cuts out the regulator.) **Refer to the circuit diagram as shown.**
* Connect WHITE/GREEN phase wire (from the alternator) direct to WHITE/RED phase wire (to the rectifier) by undoing the respective couplers. (This bypasses the switch.)

4. **Turn off the lighting switch. Disconnect any other electrical loads. Start up the engine and run it at steady 5 000 r/min. Under this condition, check the voltage of the RED output line of the rectifier, and diagnose according to this chart:**

Engine speed	DC line voltage	Electrical condition of generator and rectifier
5 000 r/min	16.5 V or over	Both are satisfactory.
	16.5 V or under	Either generator or rectifier or both are faulty.

If too low a voltage reading is obtained, check the alternator and rectifier in the manner to be described subsequently.

5. Next, check the regulator for performance, as follows:
   * Stop the engine, and restore the three-phase circuit to the normal hook-up, placing the switch and regulator back in service. Restart the engine and run it in no-load condition, this time with the lighting switch turned off to cut out one of the three phases.

Fig. 4-3

* Run the engine at 5 000 r/min and check the DC line voltage. Diagnose the regulator according to this chart:

Engine speed	DC line voltage	Electrical condition of voltage regulator
5 000 r/min	14 – 15.5 V	Regulator is satisfactory.
	Under 14V or Over 15.5V	Regulator is faulty.

If the regulator is found faulty by this method, check once again to be sure that the circuit connections are good, and again test the regulator as above before deciding to replace it.

NOTE: For those Model GS550 machines supplied to the U.S.A. and Canada, in which the lighting switch is locked closed, carry out the test by removing the switch knob and opening the switch.

Inspection of components

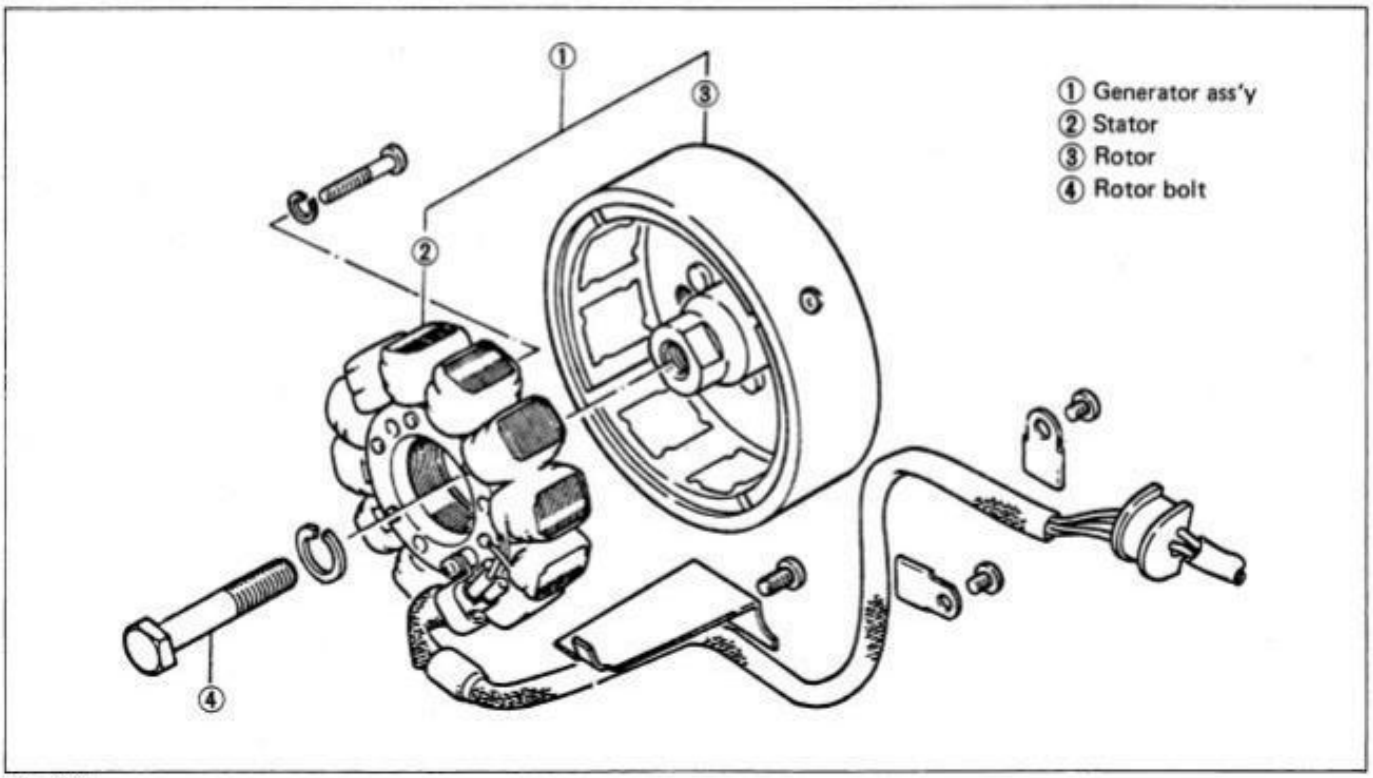

Fig. 4-4

Generator

The rotor is a pot-like mass surrounding the stator. A number of permanent magnets are imbedded in the inside wall of the rotor. A number of coils are circularly disposed on and around the stator; these coils are connected to form a three-phase armature. As the rotor revolves, its revolving magnetic fields induce electromotive force in the stator coils to deliver 14 amperes max, 14V, at 8 000 r/min.

Check to be sure that there is continuity, when checked as shown, between each two of the three lead wires extending from the generator, and there is no continuity between each lead wire and the starter core.

When checking the lead-to-lead continuity, take a resistance reading, which should be 0.65±0.05. A starter found to have no continuity between any two lead wires or to have continuity between the core and any of the three wires must be replaced.

Too large or too small a resistance reading taken means that there is a nearly open-circuited or short-circuited part in the stator winding. Such a stator, too, must be replaced, for continued use of it will result in a run-down battery.

Fig. 4-5

NOTE: Inspect also the insulation coating of the lead wires for evidence of stripping. Stripped wires must be repaired or replaced.
The generator is of either DENSO make or KOKUSAN make. When replacing the stator, be sure that the rotor and the replacement stator are of the same make.

Rectifier

A total of 6 semi-conductor elements are connected as shown, for full-wave rectification. They are encapsulated by molding and contained in a compact case. Each elements is conductive in forward direction and non-conductive in reverse direction. Check each element for this property of directionality with a tester, as follows:

1. Undo all the terminal connections on the rectifier, disconnecting lead wires coming from the generator (YELLOW, WHITE/RED and WHITE/BLUE), from the battery (RED) and from ground (BLACK/WHITE).
2. Put negative (–) probe pin of the tester to ground terminal (BLACK/WHITE), and positive (+) pin to YELLOW, WHITE/RED and WHITE/BLUE, sequentially in that order. The tester should indicate continuity for each.
   Repeat this process with negative (–) pin and positive (+) pin swapped: the tester should not indicate continuity.
3. You have just checked three rectifier elements. Check the other three similarly by putting one probe pin to the output terminal (RED).

If any of the elements is found to be **non-conductive** in forward direction or **conductive** in reverse direction, replace the rectifier unit.

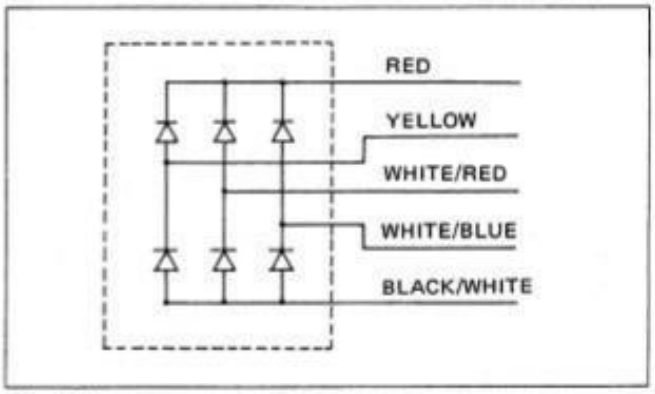

Fig. 4-6

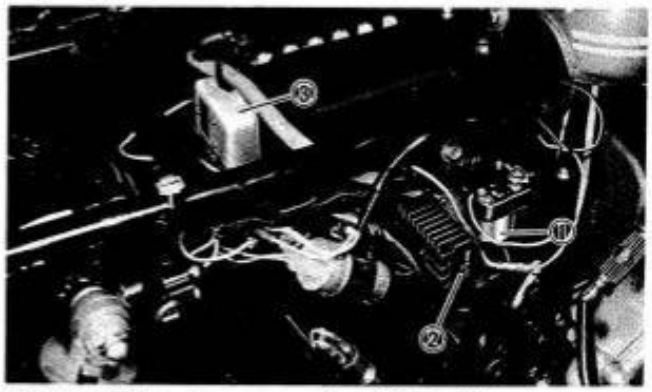

Fig. 4-7 ① *Starting motor relay,* ② *Rectifier* ③ *Regulator*

CAUTION:
1. Be sure to have the output lead wire disconnected to sever the rectifier from the battery side. Checking the rectifier with this lead wire connected may cause the element to get burned due to possible grounding.
2. Never use a megger type instrument to check for continuity: Be sure to use a circuit tester. A megger could rupture the rectifier element.
3. Never pick up engine speed when the output lead wire (RED) has been disconnected or the rectifier elements will suffer damage due to burning.

If should be borne in mind that, when the circuit tester is used for checking ohmic resistance or continuity, its internally contained battery becomes connected to the probe pins: plus (+) polarity appears on negative (–) pin and minus (–) polarity on positive (+) pin.

Voltage regulator

The regulator comprises a silicon-controlled rectifier element, a constant-voltage diode and resistances, connected as shown. It is located between ground and one of the three phase wires and, during operation, is subjected to an alternating voltage.

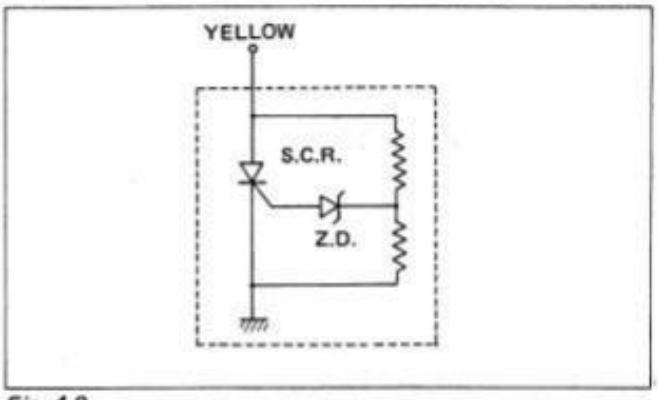

Fig. 4-8

In the internal circuit diagram given here, a P-type SCR is shown. To its gate is connected the constant-voltage diode. In normal operation, an alternating current flows through the resistances. As the generator picks up speed, its output voltage rises and, if it rises to a certain level, the diode becomes conductive in reverse direction for the positive halfwave, thereby applying a halfwave positive voltage to the SCR gate and thus making the SCR conductive. In this manner, the regulator passes excess electricity to ground so as to prevent the DC output voltage of the rectifier from rising above the predetermined level.

A regulator found to be at fault through the test outlined in NO-LOAD TEST, must be replaced by a new one. Be sure to use a replacement regulator of the same maker as that of the generator.

STARTING SYSTEM

DESCRIPTION

The starting system is composed of the devices shown in the diagram given below; namely, the starting motor, relay, starter switch and battery. Depressing the starter button (on the right handle) energizes the relay to close its contact points, thereby connecting the starter motor to the battery. The motor draws about 80 amperes to crank the engine for starting.

Starting system diagram

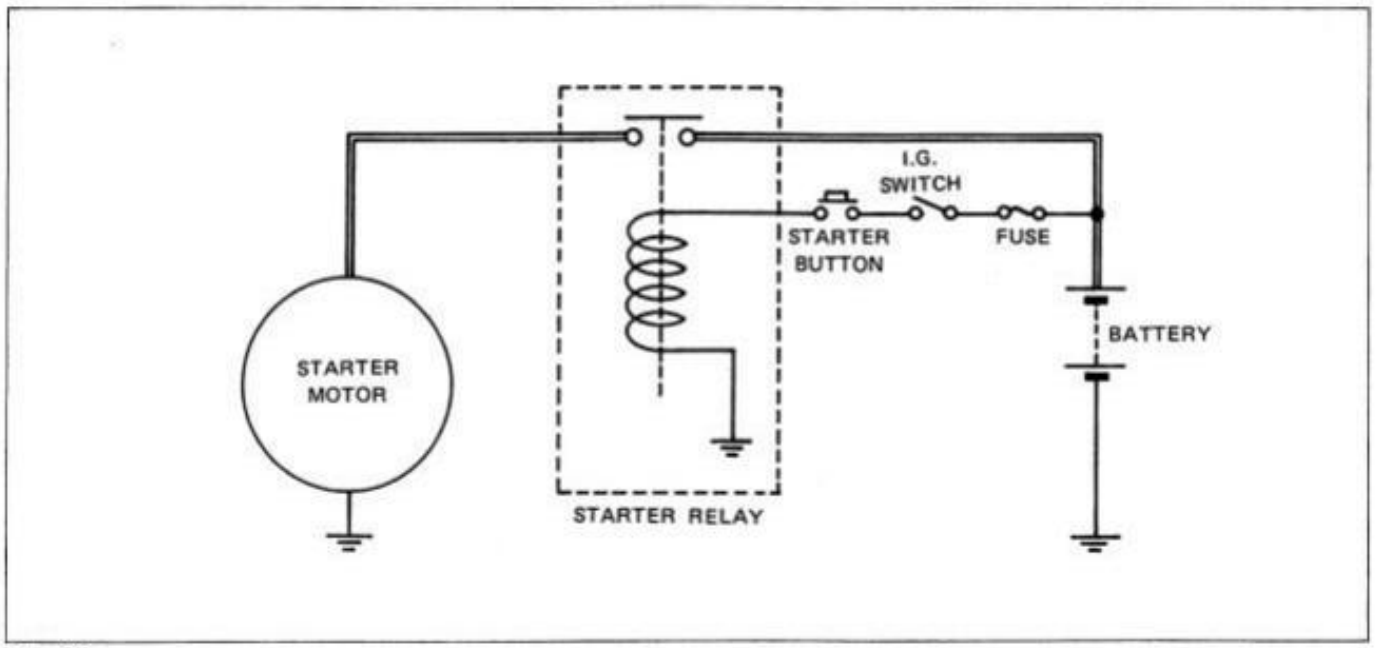

Fig. 4-9

INSPECTION

Inspect the components to be sure that wiring connections are all tight and that the circuit wires are in good condition. Make sure, too, that each component is securely grounded.

When the system is in sound condition, the starter relay will make a single audible click as the starter button is depressed and immediately the motor will crank the engine. Absence of the click, and consequent refusal of the motor to crank the engine mean that the relay is not getting energized possibly because the battery is in run-down condition or there is an open circuited in the coil of the relay.

If the relay "clicks" but the motor will not crank, then it is likely that the relay contact points are defective of the motor is internally open-circuited.

Starter motor specifications

The motor is mounted on top of the crankcase behind the cylinder block, and drives the crankshaft through a train of gear and a one-way clutch mounted on the generator rotor. It is either of DENSO make or of MITSUBA make, and is made to the following electrical specifications:

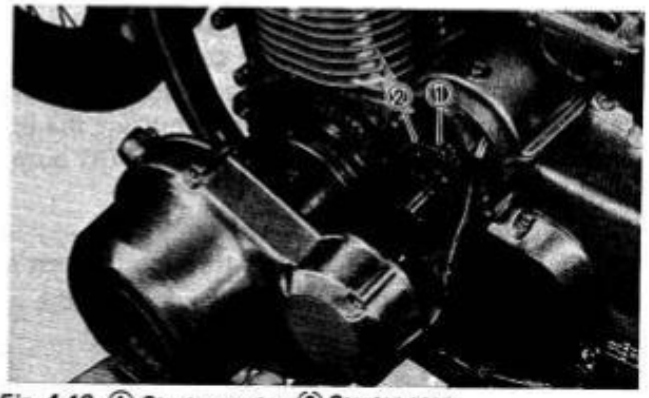

Fig. 4-10 ① Starter motor, ② Starter gear

DENSO-make motor

Item	No-load data	Locked-rotor data
Voltage	11 volts	5.2 volts
Current	45 amperes max.	320 amperes max.
Torque	——	0.4 kg-m min.
Speed	8 000 r/min min.	——

MITSUBA-make motor

Item	No-load data	Locked-rotor data
Voltage	11 volts	5.5 volts
Current	50 amperes max.	280 amperes max.
Torque	——	0.35 kg-m min.
Speed	4 500 r/min over	——

Starter motor

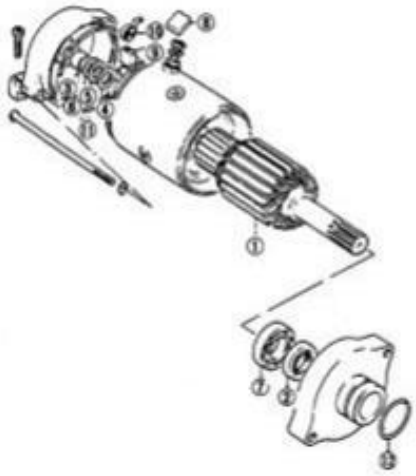

① Armature
② Oil seal
③ Bushing
④ Shim No. 1
⑤ Shim No. 2
⑥ Shim No. 3
⑦ Bearing
⑧ Brush (+)
⑨ Brush (−)
⑩ Spring
⑪ Gasket
⑫ O ring

Fig. 4-11

Inspection of components

Carbon brushes

With its brushes excessively worn down, the motor is unable to draw full current and, consequently, cranks the engine poorly. Measure the length of each brush; replace brushes whose length has shortened to the limit.

Brush length specification		
Make	Standard	Service limit
MITSUBA	12 - 13 mm (0.47 - 0.51 in)	6 mm (0.24 in)
DENSO	14 mm (0.55 in)	9 mm (0.35 in)

Commutator

Inspect the commutator surface for wear, "high mica," and burn or grooving. Smoothen the surface by grinding with sandpaper, as shown in Fig. 4-14. Undercut the mica to the depth specified.

Standard undercut	0.6 mm (0.02 in)
Limit on undercut	0.2 mm (0.008 in)

Armature coil

Using a circuit tester, check the coil for open and ground by putting the probe pins to each commutator segments and rotor core (to test for ground) and to two segments at several places (to test for open), with the brushes lifted off the commutator surface.

If the coil is found open-circuited or grounded, replace the armature. Continued use of such an armature is sure to end up with a sudden failure of the starting motor .

Staring motor relay

This relay is substantially a solenoid switch and, as such, is required to have its coil, contact plunger and contact points in sound condition. It should be borne in mind that its contact points have to pass a very large current drawn by the starting motor.

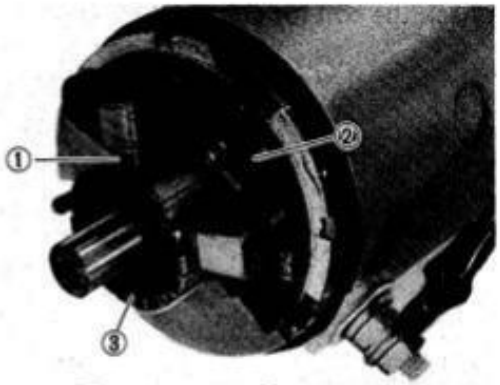

Fig. 4-12 ① Brush, ② Brush Spring, ③ Commutatator

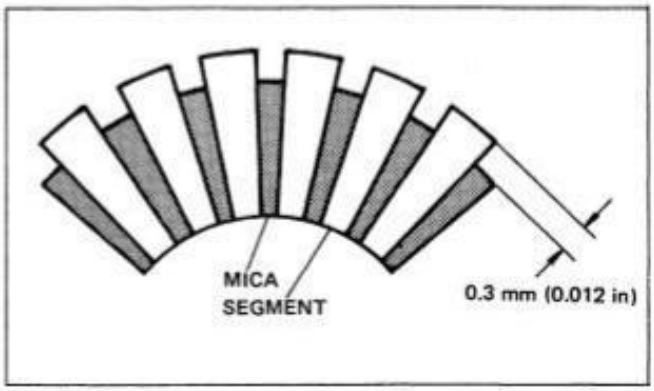

Fig. 4-13

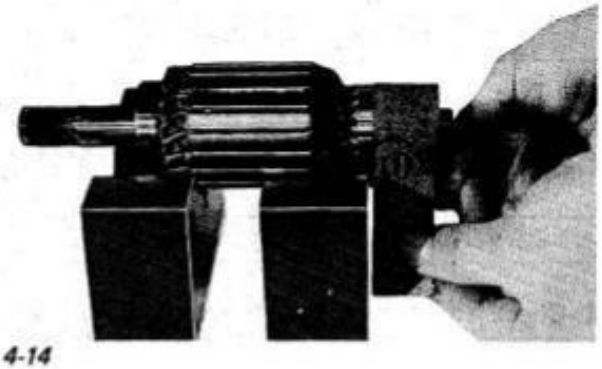

Fig. 4-14

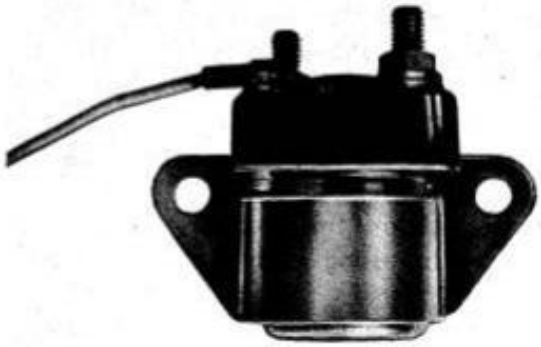

Fig. 4-15

Check the coil for continuity.

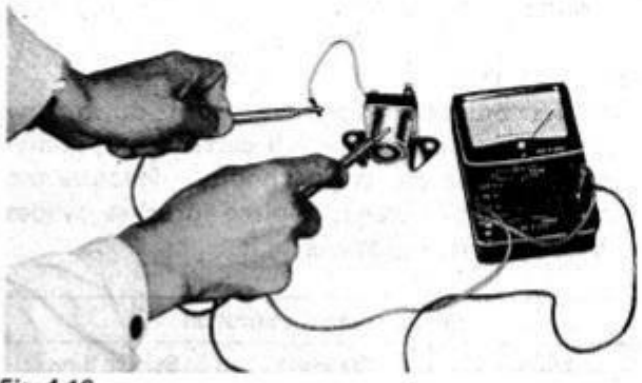

Fig. 4-16

To see whether the contact points are closing fully to pass the large load current, operate it in the usual manner (by depressing the button on the right handle) to connect the battery to the motor and measure the voltage between the positive (+) terminal of motor and ground and also between the positive (+) terminal of battery and ground. If the two readings are equal, it means that the relay contact points are satisfactory. If the difference between the two is large or if no voltage shows up on the motor side, replace the relay for its contact points are satisfactory.

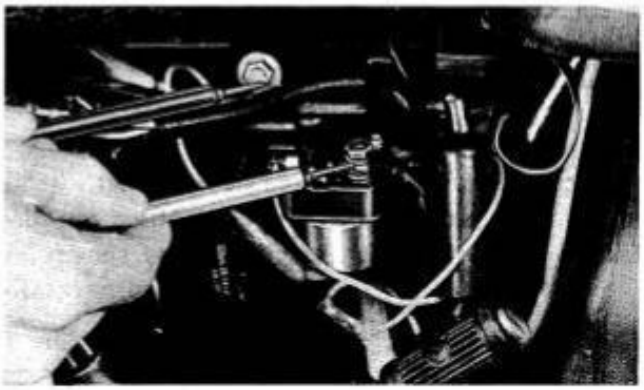

Fig. 4-17

BATTERY

Battery specifications	
Type	YB10L-A2 lead storage battery
Capacity	**12V, 10 Ah/10 HR**
Voltage	12V
Electrolyte S.G.	**1.28 at 20°C**

1. Check to be sure that the vent pipe is secure tight, free of any damage, and is routed as shown.
2. Add distilled water, as necessary, to keep the surface of the electrolyte above the **LOW** level line but not above the HIGH level line.
3. If the electrolyte surface falls rapidly to require frequent addition of distilled water, check the charging system for the cause of low charging rate.
4. Periodically, check the electrolyte for specific gravity by using a hydrometer to tell the state of charge. After adding distilled water, be sure to run the machine to recharge the battery.

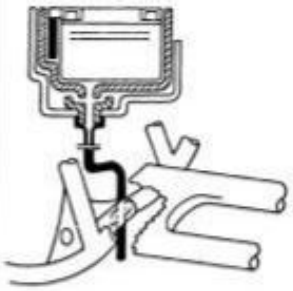

CAUTION:

- Before extracting or reinstalling the battery, first lift up this case approx. **10 mm (0.4 in).**
- Install the battery exhaust pipe securely as shown at left.

Fig. 4-18

IMPORTANT: An S.G. reading of 1.22 (at 20°C) or under means that the battery needs recharging off the machine: take it down and charge it from a recharger. Charging the battery in place from the recharger could promote rusting or even rupture the rectifier.

CAUTION: 1. Be careful not to position the battery in the other way around in place after mounting it on the machine. Misconnection of lead wires to its terminals is sure to burn to damage some components.
2. Any lead storage battery develops hydrogen gas. Never allow any flame to come closer to the battery.

IGNITION SYSTEM

DESCRIPTION

There are two ignition coils, two contact breakers and two condensers to produce sparking energy for the four spark plugs. No. 1 breaker is for Nos. 1 and 4 spark plugs; and No. 2 breaker is for Nos. 2 and 3 spark plugs. Each ignition coil is connected to the plugs as shown.

When No. 1 piston is up on compression stroke, No. 4 piston too is up but on exhaust stroke. Sparks occurring at the same time in Nos. 1 and 4 cylinders present no problem, and the same reasoning applies to Nos. 2 and 3 cylinders. Ignition order is 1-2-4-3, as counted from left to right by the rider mounting the machine. It should be noted that Nos. 1 and 2 breakers operate 180 degrees apart in term of crank angle.

Schematic diagram of ignition system

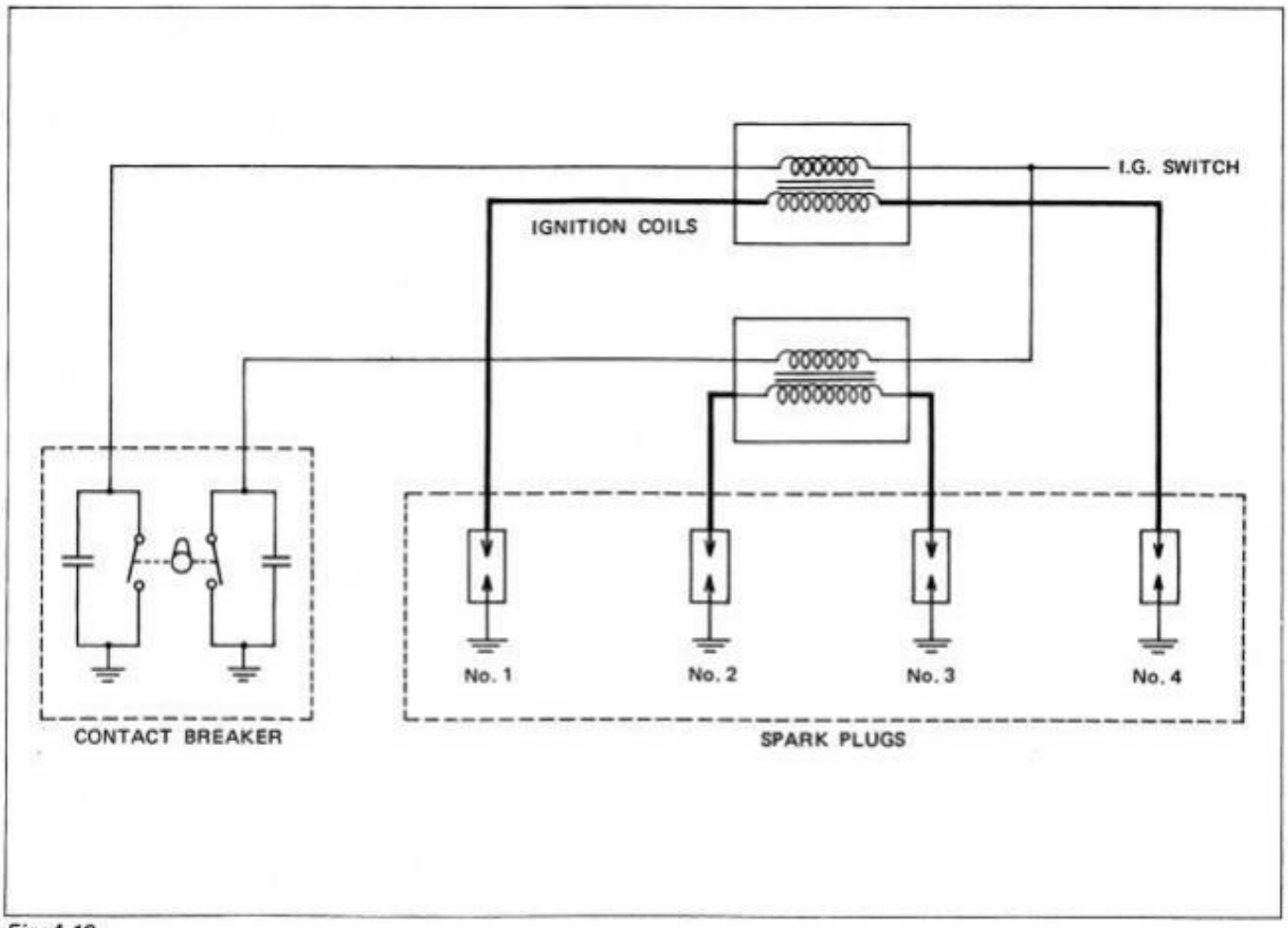

Fig. 4-19

Ignition system data

SPARK PLUG: Type Gap	NGK B-8ES or DENSO W24ES 0.6 - 0.8 mm (0.024 - 0.031 in)
THREE-NEEDLE SPARKING DISTANCE	8 mm (0.3 in) minimum
CONTACT POINT GAP	0.3 - 0.4 mm (0.012 - 0.016 in)
CONDENSER CAPACITANCE: KOKUSAN DENSO	0.25 μF 0.18 μF
CAM DWELL ANGLE : KOKUSAN DENSO	190° 180°
IGNITION TIMING	17° B.T.D.C. below 1 500 r/min 37° B.T.D.C. over 2 500 r/min
FIRING ORDER	1 - 2 - 4 - 3

INSPECTION

Ignition coils

Using the electro tester, test each ignition coil for sparking performance. Test connection is as indicated. Make sure that the three needle sparking distance is at least 8 mm (0.3 in).

09900-28106	Electro tester

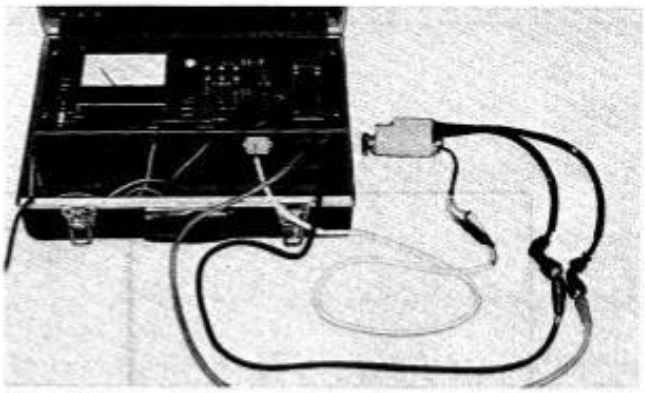

Fig. 4-20

Spark plugs

Clean the plugs in a plug cleaner or by using a wire brush and pin. Use the pin to prick out carbon, taking care not to damage the porcelain.

Check the gap with a thickness gauge, and adjust it, as necessary, to this value:

Plug gap specification	0.6 - 0.8 mm (0.024 - 0.031 in)

The standard plug is either of NGK make or of DENSO make.

Fig. 4-21

Contact breaker points

Check and adjust the contact points as outlined in page 69. Inspect the contact points for wear and burning. If the point faces are dirty, wipe them clean with clean, dry cloth.

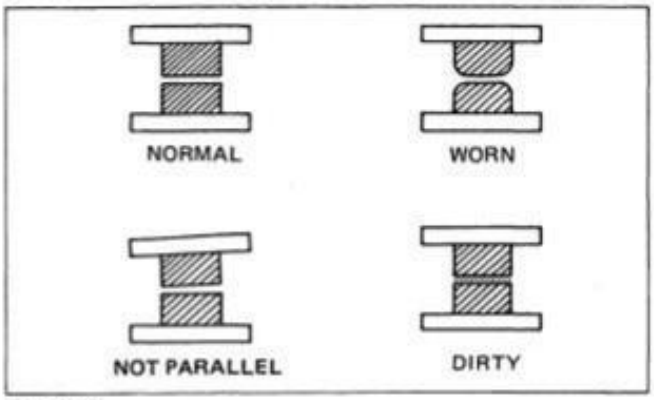

Fig. 4-22

Condensers

Use the electro tester to check each condenser for capacitance. When checking, be sure to lift the condenser off the breaker base plate by removing the screws securing it to the base.

Condenser capacitance	
KOKUSAN	0.25 μF
DENSO	0.18 μF

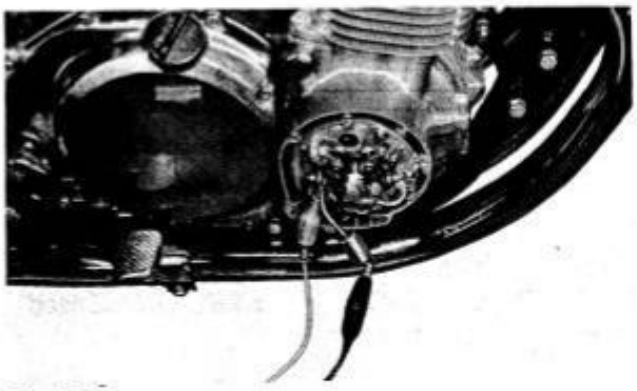

Fig. 4-23

Advance governor

Clean the sliding surfaces, removing dust and stains, and check to be sure that its moving parts are capable of smooth movement. Inspect the advancer pin for wear.

Fig. 4-24

Checking advancing action

Upon starting up the engine, check the engine speeds at which the ignition begins to advance and stops advancing. For the instrument, use the electro tester.

09900-28106	Electro tester

Fig. 4-25

UTILITY SWITCHES AND DEVICES

IGNITION SWITCH

Be sure that the ignition switch, when checked with a circuit tester, show internal continuity as indicated in the chart below, and replace it if any continuity or noncontinuity not indicated in the chart is noted:

Ignition switch continuity chart

Switch Position	Terminals			
	RED	YELLOW	GRAY	BROWN
OFF				
ON	○——	——○	○——	——○
P	○——	——	——	——○

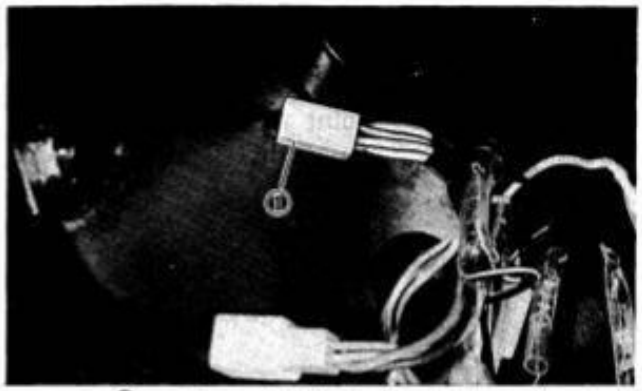

Fig. 4-26 ① Ignition switch lead wire

FRONT BRAKE LAMP SWITCH

See if this switch shows continuity when the front brake lever is squeezed: put the tester probe pins to the WHITE ① and YELLOW ② lead wires of this lamp switch.

NOTE: To advance or retard the action of this switch for the purpose of adjustment, reposition it in place: this is by loosening the 2 screws securing the switch to the body.

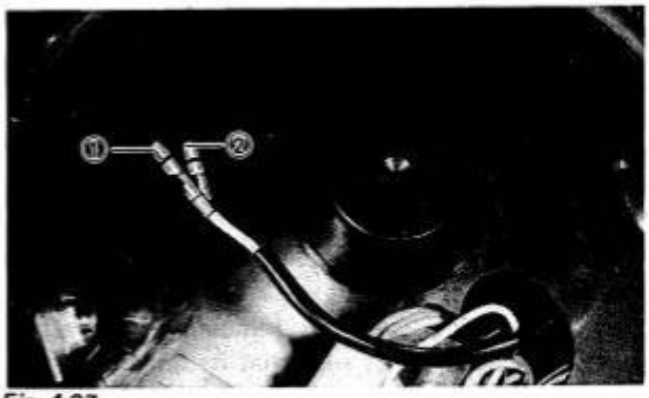

Fig. 4-27

REAR BRAKE LAMP SWITCH

Check this lamp in the same way that the front lamp switch is tested for internal continuity. Its lead wires are WHITE ① and YELLOW ② Depress the brake pedal, and the continuity will be noted.

NOTE: To make the switch close earlier (to turn on the lamp upon depressing the brake pedal), reposition the switch body upward. Lowering this body retards the action.

Fig. 4-28

LEFT HANDLE SWITCH

This is a switch combination comprising **lighting switch, dimmer switch, turn signal switch** and **passing (or courtesy) switch.** Circuit countinuity through each switch component can be checked by putting the two testing prods or pins of the circuit tester to the switch leads (at the coupler).

09900-25002	Pocket tester

Fig. 4-29

Lead wires are identified by colors at the coupler, as follows:

BLACK/WHITE	LIGHT GREEN	ORANGE	WHITE/RED	GREEN	LIGHT BLUE
(no lead)	BLACK	YELLOW	WHITE	GRAY	WHITE/GREEN

Lighting and dimmer switches

The lighting and dimmer switches should exhibit continuity, when checked with the circuit tester, according to this chart:

Lighting and dimmer switches continuity chart

	Orange	Gray	Yellow/White	Blue / White	White	White/Green	White / Red	Yellow
OFF	○			○				
ON Low Beam	○	○	○	○	○	○	○	
ON High Beam	○	○	○	○	○	○	○	○

Two colors, YELLOW/WHITE and BLUE/WHITE, are given to lead wires inside the lighting switch but not at the coupler.

If any abnormally high resistance is noted to accompany the continuity indication, it probably means that the contact points in the switch are in faulty condition and need repair.

Passing switch, horn switch and turn signal switch
Check these switches in the same way that the lighting switch is checked.

Passing switch

Switch Position	YELLOW	WHITE
OFF		
ON	○	○

Horn switch

Switch Position	GREEN	BLACK/WHITE
OFF		
ON	○	○

Turn signal switch

Switch Position	LIGHT GREEN	LIGHT BLUE	BLACK
OFF			
ON, Right	○	○	
OFF, Left		○	○

KILL SWITCH AND STARTER SWITCH

Check these switches in the same way that the lighting switch is checked.

Kill switch

Switch Position	YELLOW	YELLOW/WHITE
OFF		
ON	○	○

Starter switch

Switch Position	YELLOW /GREEN	YELLOW /WHITE
OFF		
ON	○	○

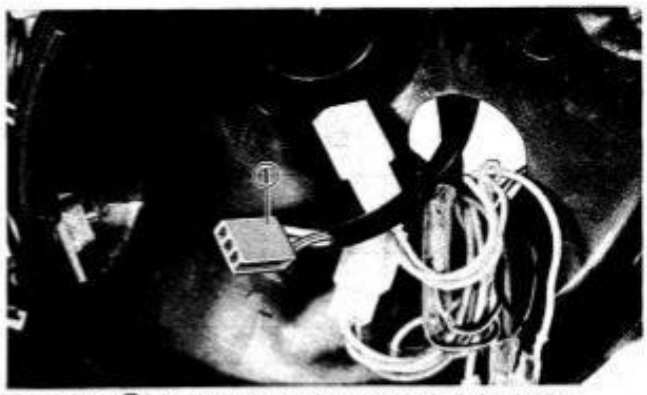

Fig. 4-30 ① Kill switch and starter switch lead wire

OIL PRESSURE SWITCH

This switch is located on the discharge side of the engine oil pump to close and open in response to the discharge pressure and thus to turn the warning lamp on and off.

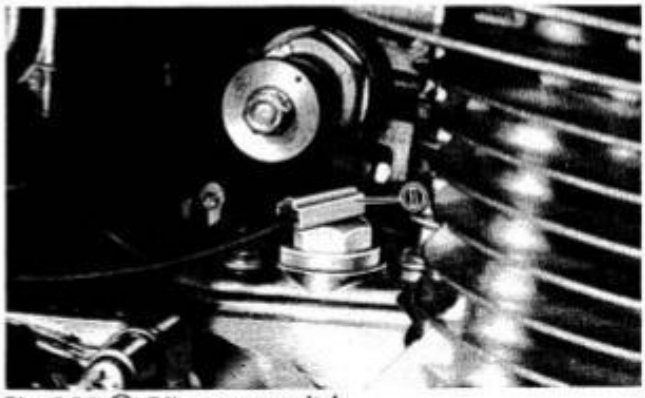

Fig. 4-31 ① Oil pressure switch

Gearshifting switch and gear position indicator

If the neutral lamp and digital-display indicator do not light up partially or totally, check the switch (removed from the transmission but remaining wired) by manually grounding each of its terminals to see whether or not the right indication comes up each time; if it does not, then the switch is defective and requires replacement. Otherwise, the cause could be in the wiring.

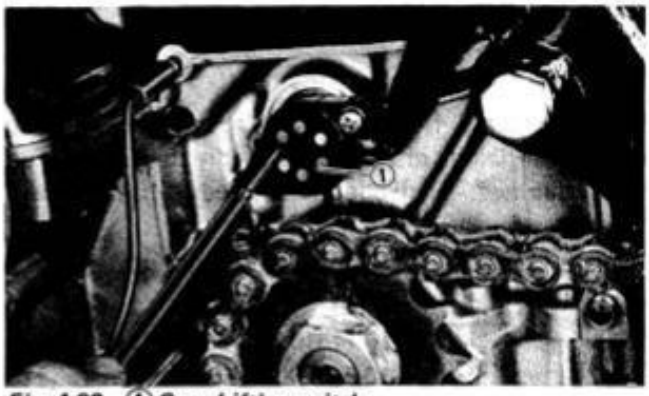

Fig. 4-32 ① Gearshifting switch

If the indicator displays an abnormal digit, such as "8", it is likely that there is a short between lead wires. The circuit tester will quickly reveal and locate such a fault.

Lamp wattage data

The lighting system of Model GS550 uses the lamps with the following rated wattage:

Lamp		Wattage (W)
Headlight:	High beam Low beam	50 40
Meter light		3.4
Turn signal indicator light		3.4
High-beam indicator light		3.4
Neutral indicator light		3.4
Turn signal light		23
Rear combination light:	Tail & parking Stop	8 (3 cp) 23 (32 cp)

NOTE: In the machines supplied to the U.S.A. and Canada, the headlight of 50/35 watts is used.

GROUP 5

SPECIAL TOOLS

The tools listed hereunder are special ones, designed to facilitate maintenance work-disassembly, reassembly, servicing, checking, etc.—on the GS550, and protect the parts and components of the motorcycle against damage. Each shop is advised to have these special tools as standard shop equipment.

Ref. No.	Tool number	Description
1	09916-14510	Valve lifter
2	09916-57320	Ⓐ Valve guide installer handle
	09911-94710	Ⓑ Valve stem oil seal installer attachment
3	09916-44510	Valve guide remover
4	09916-64510	Tappet depressor
5	09916-54530	Valve guide installer attachment
6	09914-24510	Ⓐ "T" handle
	09930-14520	Ⓑ Plug wrench
	09930-14530	Ⓒ Universal joint
	• 09911-74520	Ⓓ 12-mm socket wrench
7	09910-34510	Piston pin puller
8	09913-14510	Fuel level gauge
9	09930-44510	Rotor holder
10	09914-25811	"T" hexagon wrench (6 mm)
11	09916-74521	Ⓐ Piston ring compressor body
	• 09916-74530	Ⓑ Piston ring compressor band (55 – 65 mm bore)
12	09913-14520	Throttle valve adjust wrench (8 mm)
13	09941-44510	Swing arm bearing romover
14	09941-34511	Steering inner race and swing arm bearing installer
15	09916-84510	Forceps
16	09916-34510	Valve guide reamer set
	09916-34520	Ⓐ Reamer (7 mm dia.)
	09916-34530	Ⓑ Reamer (12.2 mm dia.)
	09916-34540	Ⓒ Handle
17	09916-24900	Valve seat cutter set (Except U.S.A. and Canada)
	99103-45011	Valve seat cutter set (U.S.A. and Canada)
18	09913-13121	Carburetor balancer set
19	09911-70131	Hexagon wrench (4 mm)
20	09915-74510	Oil pressure gauge
21	09915-64510	Compression gauge
22	09940-34512	Front fork assembling tool set
23	09912-34510	Cylinder disassembling tool
24	09910-10710	8 mm stud installing tool

NOTE: Asterisked (*) tools are respective for GS550.

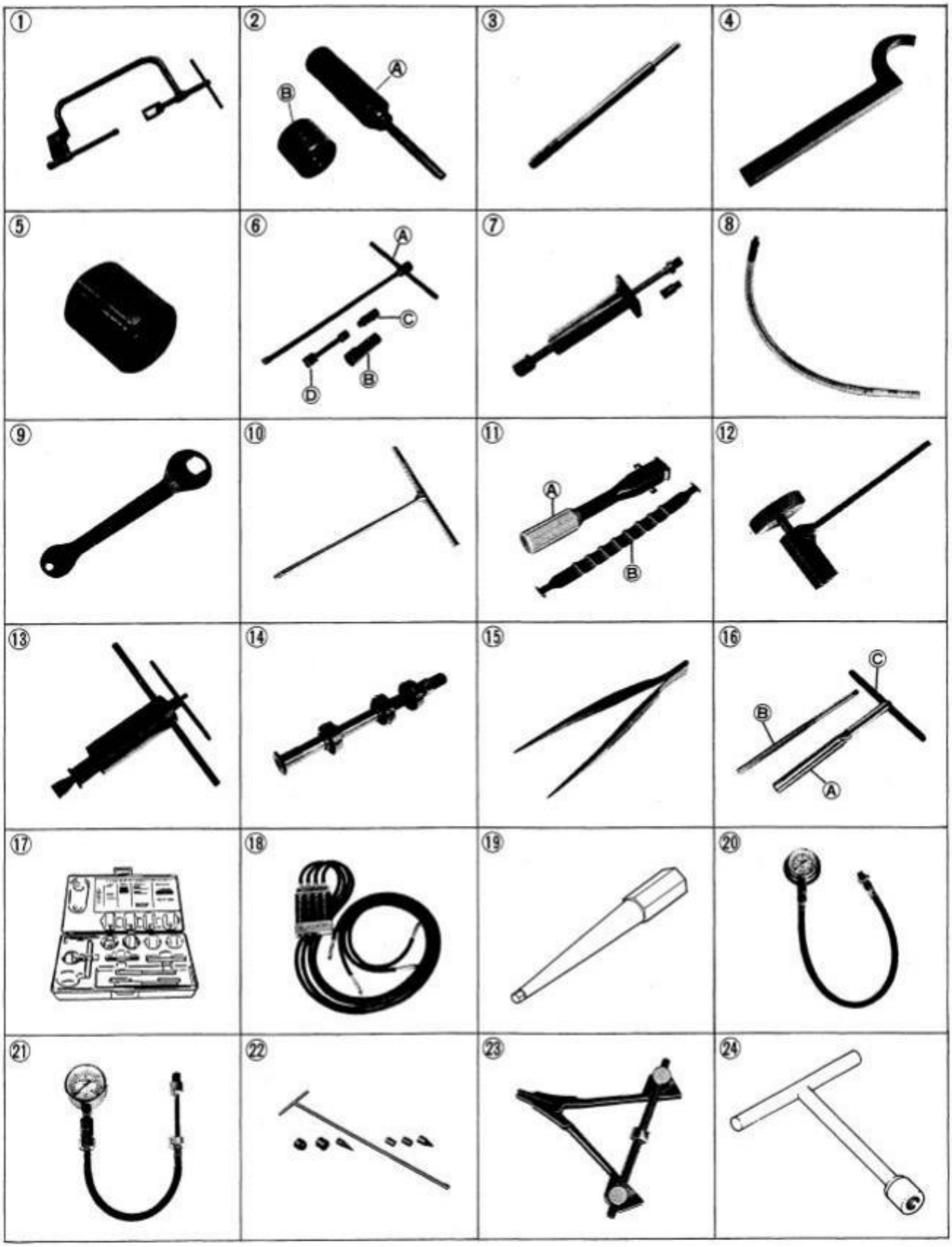
①
②
A
B
③
④
⑤
⑥
A
C
D
B
⑦
⑧
⑨
⑩
⑪
A
B
⑫
⑬
⑭
⑮
⑯
C
B
A
⑰
⑱
⑲
⑳
㉑
㉒
㉓
㉔

Ref. No.	Tool number	Description
25	09913-50121	Oil seal remover
26	09913-60910	Bearing puller
27	09913-61110	Bearing puller (55 mm : A)
28	09913-70122	Bearing and oil seal installing tool (50 mm Dia.)
29	09913-80112	Bearing and oil seal installing tool
30	09920-53710	Clutch sleeve hub holder
31	09900-06105	Snap ring opener
32	09900-06108	Circlip opener
33	09900-06104	Circlip opener
34	09930-33710	Rotor remover attachment
35	09930-40113	Engine sprocket and flywheel holder
36	09940-10122	Steering stem lock nut wrench
37	09940-50111	Front fork oil seal installing tool
38	09940-60113	Spoke nipple wrench
39	09900-09002	Shock driver set
	09900-09202	Ⓐ Driver bit
	09900-09101	Ⓑ Driver holder for loosening
	09900-09102	Ⓒ Driver holder for tightening
40	09900-25002	Pocket tester
41	09900-26004	Engine tachometer
42	09900-27003	Timing tester
43	09900-28106	Electro tester
44	09900-28403	Hydrometer
45	09930-30102	Rotor remover shaft set
46	09900-20803	Thickness gauge
47	09915-24510	Ⓐ Socket wrench joint (for chain tensioner) 9.5 → 12.7 mm
	09915-24520	Ⓑ Socket wrench joint (for chain tensioner) 12.7 → 9.5 mm
48	09941-94510	Wheel rim protector

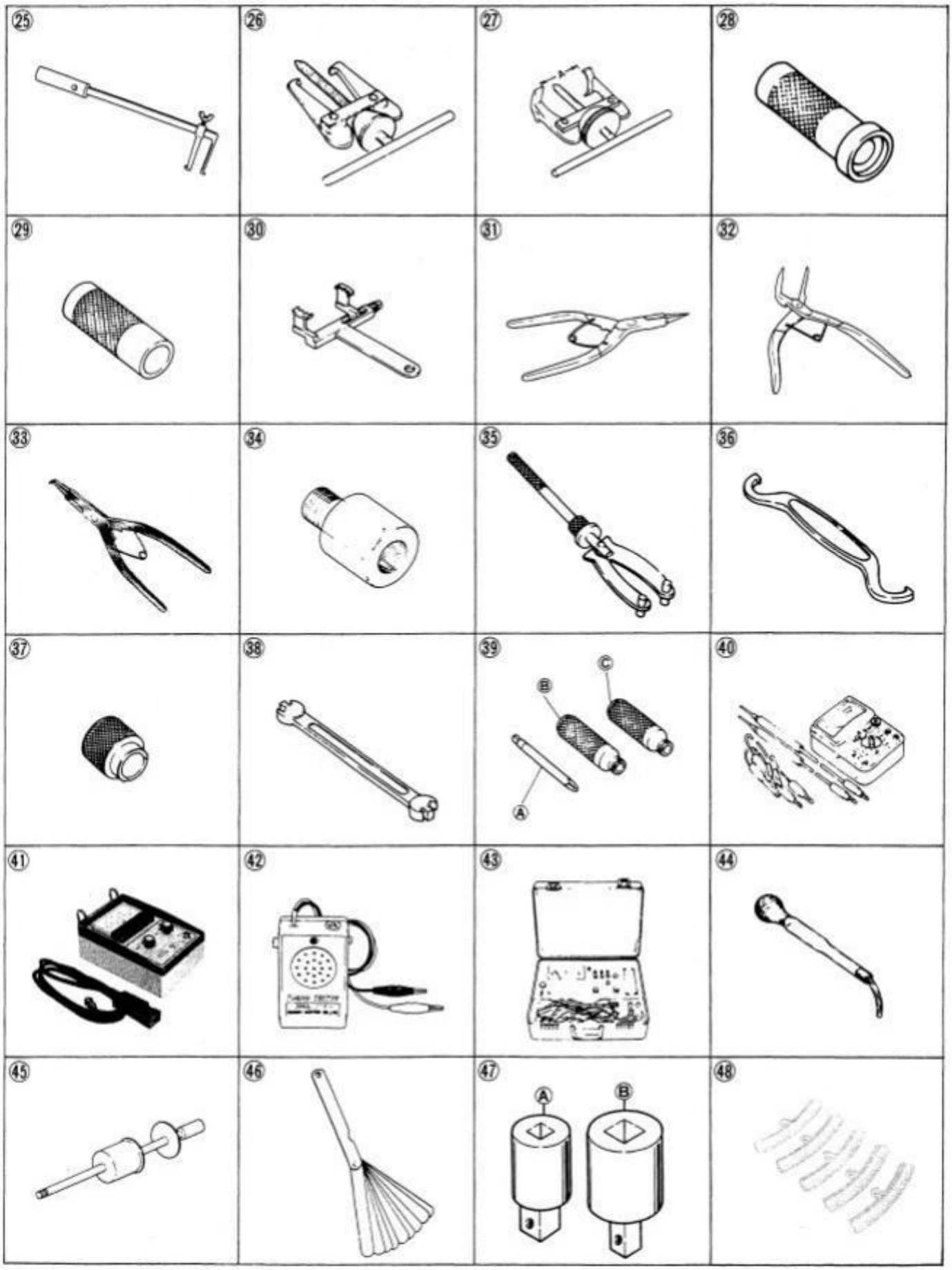
25
26
27
28
29
30
31
32
33
34
35
36
37
38
39
A
B
C
40
41
42
43
44
45
46
47
A
B
48

Ref. No.	Tool number	Description
49	09943-74111	Front fork oil level gauge
50	09950-74510	Tire bead breaker
51	09900-22301	Plasti gauge

NECESSARY MATERIALS

GROUP 6

The materials listed below are needed for maintenance work on the GS550, and should be kept on hand for ready use. They are additions to such standard materials as cleaning fluids, lubricants, emery cloth and the like. How to use them and where to use them are described in the text of this manual.

Ref. No.	Part number	Description or name
1	99000-32040	THREAD LOCK CEMENT
2	99000-32020	SUZUKI LOCK SUPER "1333B"
3	99000-31110	SUZUKI BOND No. 1215
4	99000-25110	SUZUKI PBC GREASE
5	99000-25140	SUZUKI MOLY PASTE
6	99000-25100	SUZUKI SILICONE GREASE
7	99000-32030	SUZUKI LOCK SUPER "1303B"
8	99000-32050	SUZUKI THREAD LOCK "1342"
9	99000-32090	SUZUKI THREAD LOCK SUPER "1332B"

①

②

③

④

⑤

⑥

⑦

⑧

⑨

TIGHTENING TORQUE

ENGINE

Item	Bolt Dia. (mm)	kg-m	lb-ft
Clutch sleeve hub nut	24	4.0 – 6.0	29.0 – 43.5
Drive sprocket nut	20	4.0 – 6.0	29.0 – 43.5
Starter clutch bolt	8	1.5 – 2.0	11.0 – 14.5
Contact breaker cam bolt	8	1.8 – 2.8	13.0 – 20.0
Cam chain tensioner lock nut	6	1.0 – 1.2	7.0 – 8.5
Camshaft sprocket bolt	6	1.0	7.0
Cylinder head bolt	6	0.7 – 1.1	5.0 – 8.0
Cylinder head nut	8	2.3 – 2.7	16.5 – 19.5
Cylinder head cover bolt	6	0.7 – 1.1	5.0 – 8.0
Camshaft holder bolt	6	0.8 – 1.2	6.0 – 8.5
Oil filter cover nut	6	0.6 – 0.8	4.5 – 6.0
Oil pan bolt	6	1.0	7.0
Crankcase bolt	6	1.0	7.0
Crankcase bolt	8	2.0	14.5
Engine mounting bolt	10	4.0	29.0
Engine mounting bolt	8	2.0	14.5
AC generator rotor bolt	12	6.0 – 7.0	43.5 – 50.5

CHASSIS

Item	Bolt Dia. (mm)	kg-m	lb-ft
Front axle holder nut	8	1.5 – 2.5	11.0 – 18.0
Front axle nut	12	3.6 – 5.2	26.0 – 37.5
Front fork tube upper pinch nut (right & left)	10	2.0 – 3.0	14.5 – 21.5
Front fork tube lower pinch bolt (right & left)	10	2.0 – 3.0	14.5 – 21.5
Steering stem pinch nut	8	1.5 – 2.5	11.0 – 18.0
Handlebar clamp bolt	8	1.2 – 2.0	8.5 – 14.5
Brake hose union bolt	10	1.3 – 1.8	9.5 – 13.0
Master cylinder munting bolt	6	0.5 – 0.8	3.5 – 6.0
Front brake caliper air bleeder	8	0.6 – 0.9	4.5 – 6.5
Front brake caliper mounting bolt	10	2.5 – 4.0	18.0 – 29.0
Rear swinging arm pivot shaft nut	14	5.0 – 8.0	36.0 – 58.0
Rear shock absorber nut (Upper & lower)	10	2.0 – 3.0	14.5 – 21.5
Rear axle nut	16	5.0 – 8.0	36.0 – 58.0
Rear brake torque link nut (front & rear)	10	2.0 – 3.0	14.5 – 21.5
Rear brake cam lever bolt	6	0.5 – 0.8	3.5 – 6.0
Front footrest bolt	10	2.7 – 4.3	19.5 – 31.0

For other bolts and nuts not listed above, refer to this chart:

Bolt Diameter	Conventional or "4" marked bolt		"7" marked bolt	
Ⓐ mm	kg-m	lb-ft	kg-m	lb-ft
4	0.1 – 0.2	0.7 – 1.5	0.15 – 0.3	1.0 – 2.0
5	0.2 – 0.4	1.5 – 3.0	0.3 – 0.6	2.0 – 4.5
6	0.4 – 0.7	3.0 – 5.0	0.8 – 1.2	6.0 – 8.5
8	1.0 – 1.6	7.0 – 11.5	1.8 – 2.8	13.0 – 20.0
10	2.2 – 3.5	16.0 – 25.5	4.0 – 6.0	29.0 – 43.5
12	3.5 – 5.5	25.5 – 40.0	7.0 – 10.0	50.5 – 72.5
14	5.0 – 8.0	36.0 – 58.0	11.0 – 16.0	79.5 – 115.5
16	8.0 – 13.0	58.0 – 94.0	17.0 – 25.0	123.0 – 181.0
18	13.0 – 19.0	94.0 – 137.5	20.0 – 28.0	144.5 – 202.5

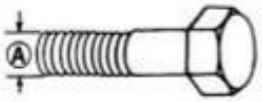

Conventional Bolt

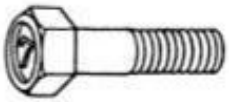

"7" Marked Bolt

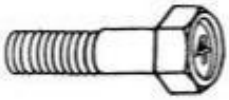

"4" Marked Bolt

TROUBLE SHOOTING

ENGINE AND CHASSIS

Complaint	Symptom and possible causes	Remedy
Engine will not start, or is hard to start.	**"Compression pressure" too low.**	
	1. Tappet clearance out of adjustment.	Adjust.
	2. Worn valve guides or valves seating poorly.	Repair, or replace.
	3. Valves mistimed.	Adjust.
	4. Piston rings excessively worn.	Replace.
	5. Worn-down cylinder bores.	Replace, or rebore
	6. Starter motor cranks but too slowly.	Consult "electrical complaints."
	No sparking on plugs.	
	1. Fouled spark plugs.	Clean or replace
	2. Wet spark plugs.	Clean and dry.
	3. Contact points dirty.	Clean.
	4. Contact points improperly gapped.	Adjust.
	5. Ignition timing out of adjustment.	Adjust.
	6. Defective ignition coil.	Replace.
	7. Open or short in high-tension cords.	Replace.
	8. Ruptured condenser.	Replace.
	No fuel reaching the carburetors.	
	1. Clogged hole in the fuel tank cap.	Clean.
	2. Clogged or defective fuel cock.	Clean or replace.
	3. Defective carburetor float valve.	Replace.
	4. Clogged fuel pipe or sucking air from vacuum pipe	Clean or replace
Engine stalls easily.	1. Fouled spark plugs.	Clean or replace
	2. Dirty contact points.	Clean.
	3. Ignition timing out of adjustment.	Adjust.
	4. Clogged fuel pipe.	Clean.
	5. Clogged jets in carburetors.	Clean.
	6. Tappet clearance out of adjustment.	Adjust.
Noisy engine	**Excessive tappet clatter.**	
	1. Tappet clearance too large.	Adjust.
	2. Weakened or broken valve springs.	Replace.
	Noise appears to come from pistons.	
	1. Pistons or cylinders worn down.	Replace.
	2. Combustion chambers fouled with carbon.	Clean.
	3. Piston pins worn.	Replace.

Complaint	Symptom and possible causes	Remedy
	Noise seems to come from timing chain.	
	1. Stretched chain.	Replace.
	2. Worn sprockets.	Replace.
	3. Tension adjustor not working.	Repair or replace.
	Noise seems to come from clutch.	
	1. Worn splines of countershaft or hub.	Replace.
	2. Worn teeth of clutch discs.	Replace.
	3. Distorted clutch discs, driven and drive.	Repair or replace.
	Noise seems to come from crankshaft.	
	1. Rattling bearings due to wear.	Replace.
	2. Big-end bearings worn and rapping.	Replace.
	Noise seems to come from transmission.	
	1. Gears worn or rubbing.	Replace.
	2. Badly worn splines.	Replace.
	3. Primary gears worn or rubbing.	Replace.
Slipping clutch	1. Clutch control out of adjustment or loss of play.	Adjust.
	2. Weakened clutch springs.	Replace.
	3. Worn or distored pressure plate.	Replace.
	4. Distorted clutch discs, driven and drive.	Replace.
Dragging clutch	1. Clutch control out of adjustment or too much play.	Adjust.
	2. Some clutch springs weakened while the others are not.	Replace.
	3. Distorted pressure plate or clutch discs.	Replace.
Transmission will not shift	1. Broken gearshift cam.	Replace.
	2. Distorted gearshift forks.	Replace.
Transmission will not shift back.	1. Broken return spring on shift shaft.	Replace.
	2. Shift shafts are rubbing or sticky.	Repair.
Transmission jumps out of gear.	1. Worn shifting gears on drive shaft or countershaft.	Replace.
	2. Distorted or worn gearshift forks.	Replace.
	3. Weakened stopper spring on gearshift cam.	Replace.
Engine idles poorly.	1. Tappet clearance out of adjustment.	Adjust.
	2. Poorly seating valves.	Replace.
	3. Defective valve guides.	Replace.

Complaint	Symptom and possible causes	Remedy
Engine idles poorly	4. Ignition timing out of adjustment	Adjust.
	5. Contact points improperly gapped.	Adjust.
	6. Spark plugs gapped too wide.	Repair.
	7. Defective ignition coil or condenser resulting in weak sparking.	Replace.
	8. Float-chamber fuel level out of adjustment in carburetors.	Adjust.
	9. Carburetor pilot screws improperly set.	Adjust.
Engine runs poorly in high-speed range.	1. Valve springs are weakened.	Replace.
	2. Valve timing out of adjustment.	Adjust.
	3. Spark plugs gapped too narrow.	Repair.
	4. Ignition not advanced sufficiently due to poorly working advancer.	Repair.
	5. Weakened springs on breaker arms.	Replace.
	6. Defective ignition coil.	Replace.
	7. Float-chamber fuel level too low.	Adjust.
	8. Clogged element in air cleaner.	Clean.
	9. Clogged fuel pipe, resulting in inadequate fuel supply to carburetors.	Clean, and prime.
	10. Clogged suction cock pipe.	Clean.
Dirty or heavy exhaust smoke.	1. Too much engine oil in the engine.	Check with level gauge; drain out excess oil.
	2. Worn piston rings or cylinders.	Replace.
	3. Worn valve guides.	Replace.
	4. Cylinder walls are scored or scuffed.	Replace.
	5. Worn valve stems.	Replace.
	6. Defective stem seal.	Replace.
Engine lacks power.	1. Loss of tappet clearance.	Adjust.
	2. Weakened valve springs.	Replace.
	3. Valve timing out of adjustment.	Adjust.
	4. Worn piston rings or cylinders.	Replace.
	5. Poorly seating valves.	Repair.
	6. Ignition timing out of adjustment.	Adjust.
	7. Contact points improperly gapped.	Adjust.
	8. Spark plugs improperly gapped.	Repair.
	9. Clogged jets in carburetors.	Clean.
	10. Float-chamber fuel level out of adjustment.	Adjust.
	11. Clogged element in air cleaner.	Clean.
	12. Carburetor balancing screw loose.	Retighten.
	13. Too much engine oil.	Drain out excess oil.

Complaint	Symptom and possible causes	Remedy
Engine overheats.	1. Heavy carbon deposit on piston crowns. 2. Not enough oil in the engine. 3. Defective oil pump or clogged oil circuit. 4. Fuel level too low in float chambers. 5. Ignition timing excessively retarded, accompanied by pinging.	Clean. Add oil. Repair or clean. Adjust. Adjust.
Handle feels too heavy.	1. Steering stem overtightened. 2. Broken steel balls on steering stem. 3. Distorted steering stem. 4. Not enough pressure in wheel tires. 5. Overtightened steering ball races.	Adjust. Replace. Replace. Adjust. Adjust.
Wobbly handle	1. Loss of balance between right and left cushions. 2. Distorted front fork. 3. Distorted front axle or cocked tire.	Replace. Repair or replace. Replace.
Wobbly front wheel	1. Distorted wheel rim. 2. Worn-down front wheel bearings. 3. Loose wheel spokes. 4. Defective or improper tire. 5. Loose nut on axle.	Replace. Replace. Retighten. Replace. Retighten.
Front cushions too soft	1. Weakened springs. 2. Not enough damper oil.	Replace. Refill.
Front cushions too stiff	1. Damper oil too viscous. 2. Too much damper oil.	Replace. Remove excess oil.
Noisy front cushions	1. Not enough damper oil. 2. Loose nuts on cushions.	Refill. Retighten.
Wobbly rear wheel	1. Distorted wheel rim. 2. Worn-down rear wheel bearings. 3. Loose wheel spokes. 4. Defective or improper tire.	Replace. Replace. Retighten. Replace.
Rear cushions too soft.	1. Weakened springs. 2. Rear cushion adjustors set improperly.	Replace. Adjust.
Rear cushions too stiff	Rear cushion adjustors set improperly.	Adjust.

Complaint	Symptom and possible causes	Remedy
Noisy rear cushions	Loose nuts on cushions.	Retighten.
Poor braking (FRONT & REAR)	1. Not enough brake fluid in the reservoir. 2. Air trapped in brake fluid circuit. 3. Pads or linings worn down.	Refill to level mark. Bleed air out. Replace.

ELECTRICAL

Complaint	Possible causes	Remedy
No sparking or poor sparking	1. Defective ignition coil. 2. Defective spark plugs.	Replace. Replace.
Contact points burn or pits prematurely.	Defective condenser.	Replace.
Spark plugs soon become fouled with carbon.	1. Mixture too rich. 2. Idling speed set too high. 3. Improper gasoline. 4. Dirty element in air cleaner. 5. Spark plugs too cold.	Adjust carburetors. Adjust carburetors. Change. Clean. Replace by hot type plugs.
Spark plugs become fouled too soon.	1. Worn piston rings. 2. Pistons or cylinders worn. 3. Too much clearance of valve stems in valve guides.	Replace. Replace. Replace.
Spark plug electrodes overheat or burn.	1. Spark plugs are too hot. 2. The engine overheats. 3. Ignition timing out of adjustment. 4. Spark plugs loose in place. 5. Mixture too lean.	Replace by cold type plugs. Tune up. Adjust. Retighten. Adjust carburetors.
Generator does not charge.	1. Open or short in lead wires, or loose lead connections. 2. Shorted, grounded or open generator coils. 3. Silicon diodes punctured. 4. Shorted regulator lead wire.	Repair, replace or retighten. Replace. Replace. Repair or replace.

Complaint	Possible causes	Remedy
Generator does charge, but charging rate is below the specification.	1. Lead wires tending to get shorted or open-circuited or loosely connected at terminals. 2. Grounded or open-circuited stator coils of generator. 3. Defective silicon diodes. 4. Defective regulator. 5. Not enough electrolyte in the battery. 6. Defective cell plates in the battery.	Repair, or retighten. Replace. Replace. Replace. Add distilled water to raise its level. Replace the battery.
Generator overcharges.	1. Internal short-circuit in the battery. 2. Coil element in the regulator damaged or defective. 3. The regulator poorly grounded.	Replace the battery. Replace the regulator. Clean and tighten ground connection.
Unstable charging	1. Lead wire insulation frayed due to vibration, presenting condition of intermittent short. 2. Generator internally shorted. 3. Defective regullator.	Repair or replace. Replace. Replace.
Starter button is not effective.	1. Battery run down. 2. Defective switch contacts. 3. Brushes not seating properly on commutator in starter motor.	Recharge or replace. Repalce. Repair or replace.
Battery "sulfation"	1. Charging rate too low or too high. (A battery out of use should be recharged at least once a month to avoid sulfation.) 2. Battery electrolyte too much or too little, or its specifiec gravity too high or too low. 3. The battery left out of use too long in cold climate.	Replace the battery. Keep the electrolyte up to the prescribed level, or adjust the S.G. by consulting the battery maker's directions. Replace the battery, if badly sulfated.
Battery discharges itself rapidly.	1. Dirty container top and sides. 2. Impurities in the electrolyte or electrolyte S.G. is too high.	Clean. Change the electrolyte by consulting the battery maker's directions.

SERVICE DATA

ITEM		STANDARD		SERVICE LIMIT	
Cam height (Base circle + lift)	IN. EX.	35.485 - 35.515 mm 35.285 - 35.315 mm	(1.3970 - 1.3982 in) (1.3892 - 1.3904 in)	35.190 mm 34.990 mm	(1.3854 in) (1.3776 in)
Camshaft/journal clearance		0.020 - 0.054 mm	(0.0008 - 0.0021 in)	0.150 mm	(0.0059 in)
Camshaft journal holder inside diameter		21.959 - 21.980 mm	(0.8645 - 0.8654 in)	———	
Camshaft runout		0.03 mm	(0.001 in)	0.1 mm	(0.004 in)
Cylinder head distortion		0.03 mm	(0.001 in)	0.2 mm	(0.008 in)
Thickness of valve head periphery		1.2 - 1.4 mm	(0.039 - 0.055 in)	0.5 mm	(0.020 in)
Valve stem axis runout				0.05 mm	(0.0020 in)
Valve stem diameter	IN. EX.	6.960 - 6.975 mm 6.945 - 6.960 mm	(0.2740 - 0.2746 in) (0.2734 - 0.2740 in)	6.90 mm 6.805 mm	(0.2717 in) (0.2679 in)
Valve guide inside diameter		7.000 - 7.015 mm	(0.2756 - 0.2762 in)	IN. 7.09 mm EX. 7.10 mm	(0.2891 in) (0.2795 in)
Valve/Valve guide clearance	IN. EX.	0.02 - 0.05 mm 0.03 - 0.06 mm	(0.0008 - 0.0020 in) (0.0012 - 0.0024 in)	0.35 mm 0.35 mm	(0.014 in) (0.014 in)
Contact width of valve and valve seat		1.0 - 1.2 mm	(0.039 - 0.047 in)	1.5 mm	(0.059 in)
Valve spring free length NIHON HATSUJO Make, CHUOH HATSUJO Make,	 Inner Outer Inner Outer	 37.00 mm 43.25 mm 35.30 mm 43.00 mm	 (1.457 in) (1.703 in) (1.390 in) (1.693 in)	 33.8 mm 41.5 mm 33.8 mm 41.5 mm	 (1.331 in) (1.634 in) (1.331 in) (1.634 in)
Valve spring tension	Outer Inner	50.4 - 58.3 kg (111 - 129 lbs) for fitting length 27 mm (1.06 in) 29.3 - 34.0 kg (65 - 75 lbs) for fitting length 23 mm (0.91 in)		——— ———	
Compression pressure		9 - 12 kg/cm²	(128 - 170 psi)	6.5 kg/cm²	(92 psi)
Oil pump discharge pressure		over 0.1 kg/cm² (1.42 psi) at 3,000 rpm and at 60°C (140°F)		———	
Cylinder bore		56.000 - 56.015 mm	(2.2047 - 2.2053 in)	56.100 mm	(2.2087 in)
Piston diameter		55.945 - 55.960 mm	(2.2026 - 2.2031 in)	55.800 mm	(2.1969 in)
Cylinder/Piston clearance		0.050 - 0.060 mm	(0.0020 - 0.0024 in)	———	
Piston ring thickness	1st ring 2nd ring	1.175 - 1.190 mm 1.170 - 1.190 mm	(0.0463 - 0.0469 in) (0.0461 - 0.0469 in)	1.100 mm 1.100 mm	(0.0433 in) (0.0433 in)
Piston ring groove width	1st ring 2nd ring Oil ring	1.21 - 1.23 mm 1.21 - 1.23 mm 2.51 - 2.53 mm	(0.047 - 0.048 in) (0.047 - 0.048 in) (0.099 - 0.100 in)	1.30 mm 1.30 mm 2.60 mm	(0.051 in) (0.051 in) (0.102 in)

ITEM	STANDARD	SERVICE LIMIT
Piston ring/Ring groove clearance 1st ring 2nd ring	 0.020 - 0.055 mm (0.0008 - 0.0022 in) 0.020 - 0.060 mm (0.0008 - 0.0024 in)	 0.180 mm (0.0071 in) 0.150 mm (0.0059 in)
Piston ring end gap 1st ring 2nd ring	0.1 - 0.3 mm (0.004 - 0.012 in) 0.1 - 0.3 mm (0.004 - 0.012 in)	0.7 mm (0.03 in) 0.7 mm (0.03 in)
Piston ring free end gap 1st ring 2nd ring	6.5 mm (0.26 in) 6.5 mm (0.26 in)	5.2 mm (0.20 in) 5.2 mm (0.20 in)
Piston pin diameter	15.995 - 16.000 mm (0.6297 - 0.6299 in)	15.96 mm (0.6283 in)
Piston pin bore	16.002 - 16.008 mm (0.6300 - 0.6302 in)	16.08 mm (0.6331 in)
Connecting rod small end bore	16.006 - 16.014 mm (0.6302 - 0.6305 in)	16.05 mm (0.6319 in)
Connecting rod deflection	———	3 mm (0.12 in)
Crankshaft bearing diametral clearance	0.015 - 0.040 mm (0.0006 - 0.0016 in)	0.08 mm (0.0031 in)
Connecting rod side clearance	0.10 - 0.65 mm (0.004 - 0.026 in)	1.00 mm (0.039 in)
Crankshaft runout	Below 0.03 mm (0.0012 in)	0.05 mm (0.002 in)
Tappet clearance	0.03 - 0.08 mm (0.001 - 0.003 in)	———

CHASSIS

ITEM	STANDARD	SERVICE LIMIT
Brake disc thickness	6.7 mm (0.26 in)	Under 6.0 mm (0.24 in)
Brake disc face runout	0.1 mm (0.004 in)	0.30 mm (0.012 in)
Axle runout	0.15 mm (0.006 in)	0.25 mm (0.010 in)
Tire tread depth Front Rear	——— ———	1.6 mm (0.06 in) 2.0 mm (0.08 in)
Wheel rim runout (axial & radial)	———	2.0 mm (0.08 in)
Brake caliper piston diameter Front	42.790 - 42.810 mm (1.6846 - 1.6854 in)	Under 42.690 mm (1.6807 in)
Brake caliper cylinder diameter Front	42.860 - 42.899 mm (1.6874 - 1.6889 in)	Over 42.999 mm (1.6929 in)
Brake master cylinder piston diameter Front	13.941 - 13.968 mm (0.5489 - 0.5499 in)	Under 13.920 mm (0.5480 in)
Brake master cylinder diameter Front	13.900 - 14.043 mm (0.5472 - 0.5529 in)	Over 14.07 mm (0.5547 in)
Rear brake drum diameter	180 mm (7.09 in)	180.7 mm (7.11 in)
Rear brake lining thickness	4.0 mm (0.16 in)	2.0 mm (0.08 in)

LUBRICATION

The maintenance schedule, which follows, is based on this philosophy. It is timed by odometer indication, and is calculated to achieve the ultimate goal of motorcycle maintenance in the most economical manner.

Item \ Interval	Initial 1 000 km (600 miles)	Initial and every 2 500 km (1 500 miles)	Initial and every 5 000 km (3 000 miles)	Initial and every 10 000 km (6 000 miles)
Drive chain	Motor oil every 1 000 Km (600 miles)			
Throttle cable	–	–	Motor oil	Motor oil
Throttle grip	–	–	–	Grease
Contact breaker cam oil felt	–	–	–	Grease
Wheel bearings	Grease every 2 years or 20 000 km (12 000 miles)			
Speedometer gear housing				
Steering stem bearings				
Swinging arm bearings				
Engine oil	Change	Charnge	Change	Change
Front fork oil	Change	–	–	Change
Clutch cable	–	–	Motor oil	Motor oil
Brake pedal	–	–	Grease or oil	Grease or oil

INSPECTION

Item \ Interval	Initial 1 000 km (600 miles)	Initial and every 5 000 km (3 000 miles)	Initial and every 10 000 km (6 000 miles)
Oil filter	Change	Change	Change
Carburetor	Adjust	Adjust	Adjust
Contact breaker point and timing	Check and adjust	Check and adjust	Check and adjust
Spark plug	Clean and adjust gap	Clean and adjust gap	Replace
Air cleaner element	–	Clean	Clean
Clutch	Adjust	Adjust	Adjust
Exhaust pipe and muffler	Retighten	Retighten	Retighten
Compression	Check	Check	Check
Oil pressure	–	Check	Check
Oil sump filter	–	–	Clean
Tappet clearance	Check	Check	Check
Drive chain	Adjust every 1 000 km (600 miles)		
Battery	Check	Check	Check
Brake system (front and rear)	Check	Check	Check
Throttle cable	Adjust	Adjust	Adjust
Tire	–	Check	Check
Fuel hose Brake hose	Change every 2 years		
Steering	Check	Check	Check
All nuts and bolts (Engine and body)	Retighten	Retighten	Retighten

WIRING DIAGRAM

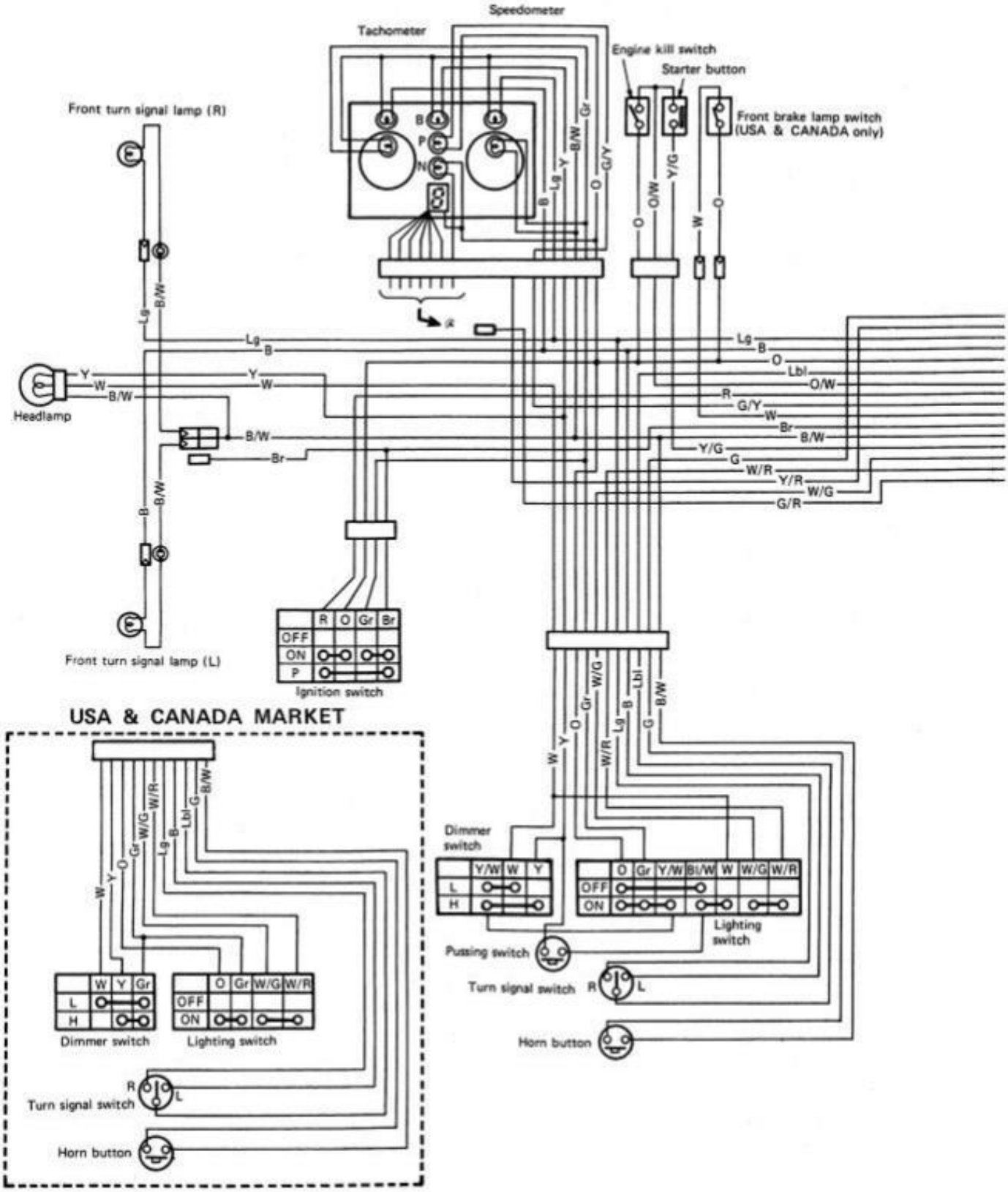

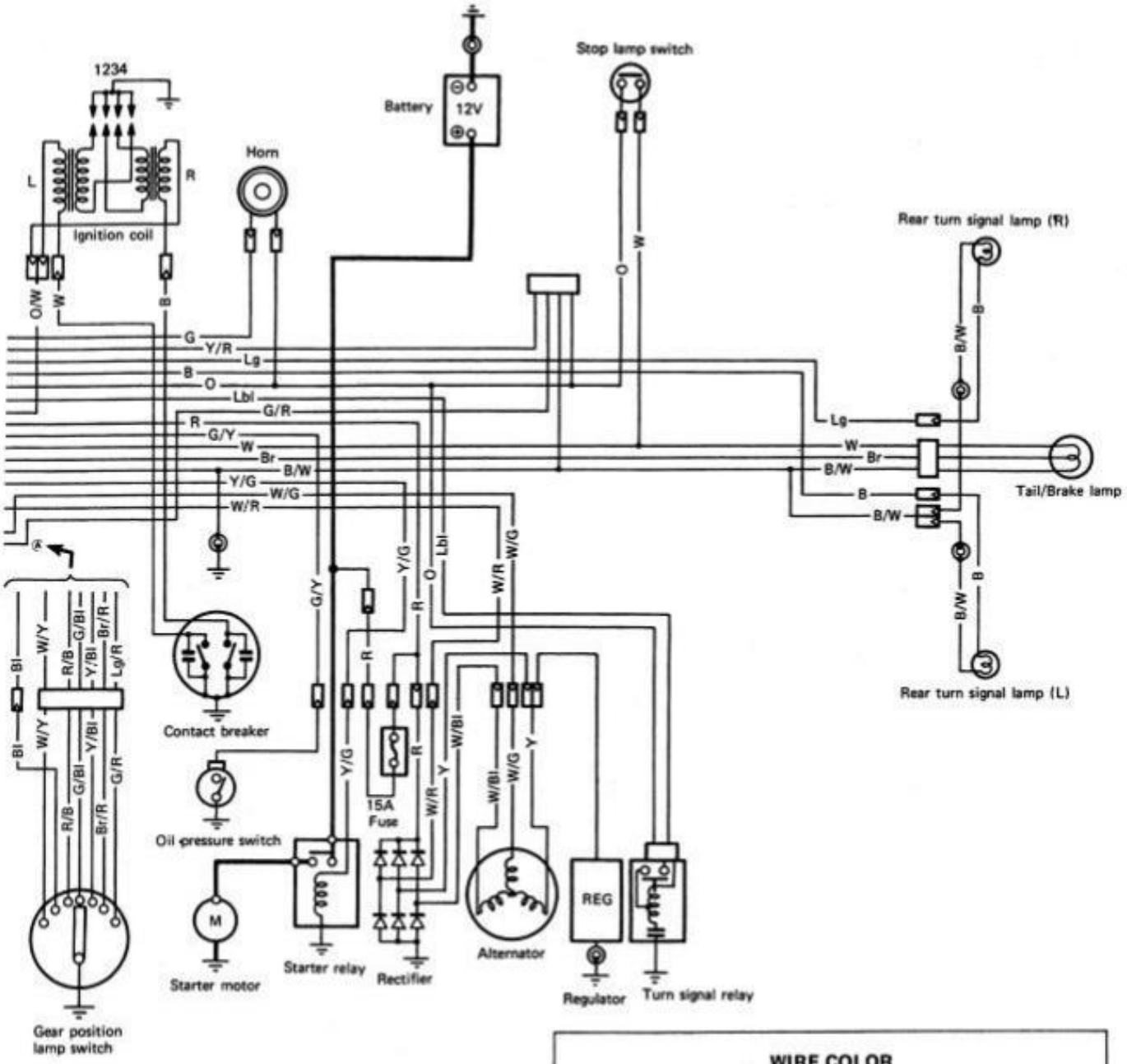

WIRE COLOR

B	Black	B/W	Black with white tracer
W	White	G/R	Green with Red tracer
Y	Yellow	G/Y	Green with Yellow tracer
R	Red	O/W	Orange with White tracer
O	Orange	Y/G	Yellow with Green tracer
G	Green	Y/R	Yellow with Red tracer
Lg	Light green	W/R	White with Red tracer
Br	Brown	W/G	White with Green tracer
Gr	Gray	W/Y	White with Yellow tracer
Bl	Blue	R/B	Red with Black tracer
Lbl	Light blue	G/Bl	Green with Blue tracer
		Y/Bl	Yellow with Blue tracer
		Br/R	Brown with Red tracer
		W/Bl	White with Blue tracer

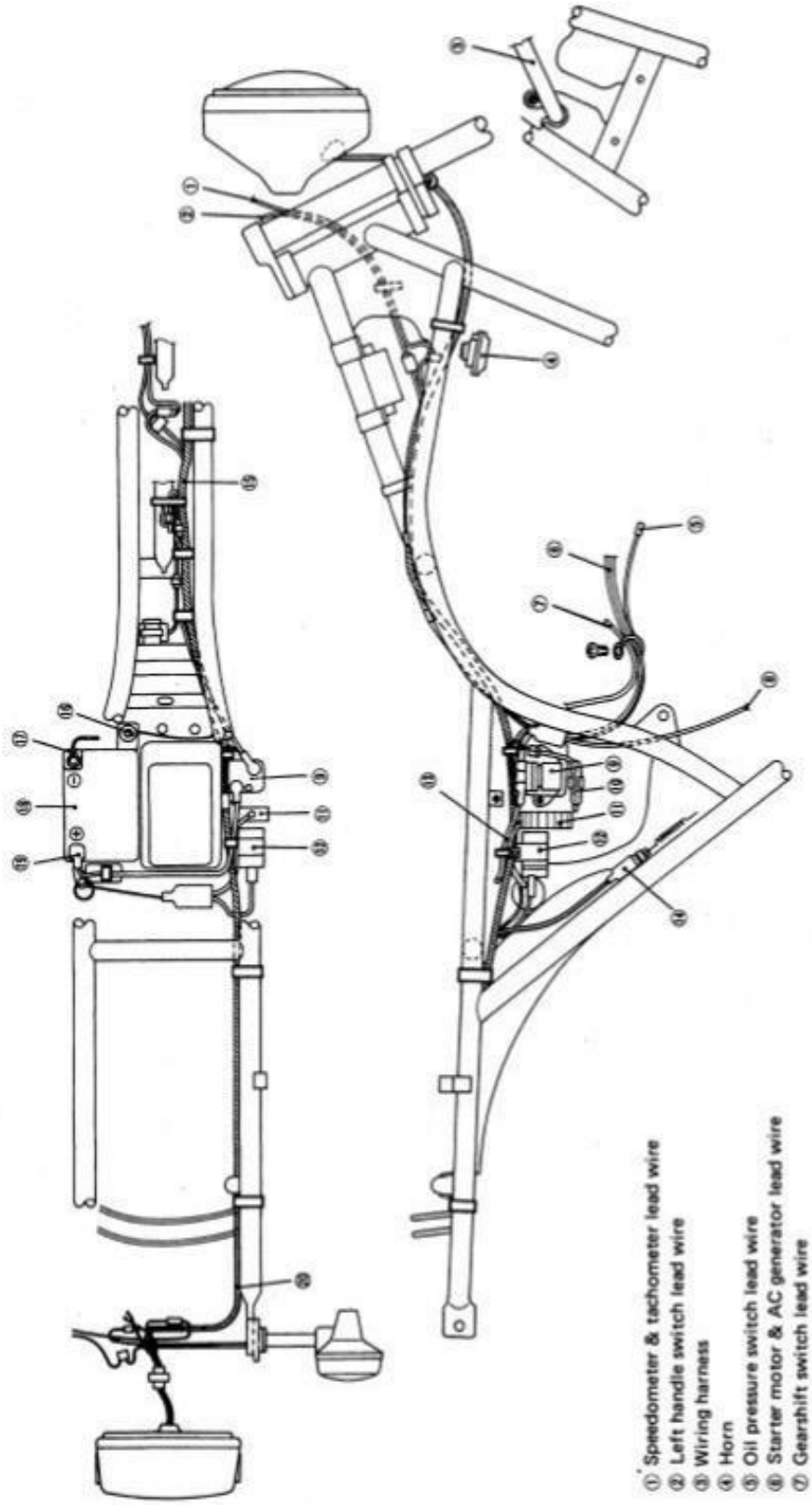

① Speedometer & tachometer lead wire
② Left handle switch lead wire
③ Wiring harness
④ Horn
⑤ Oil pressure switch lead wire
⑥ Starter motor & AC generator lead wire
⑦ Gearshift switch lead wire
⑧ Contact breaker lead wire
⑨ Starter motor relay
⑩ Fuse
⑪ Silicon rectifier
⑫ Turn signal relay
⑬ Rectifier, magneto & battery plus lead wire
⑭ Rear brake lamp switch
⑮ Ignition coil & gearshift switch lead wire
⑯ Body earth
⑰ Minus lead wire
⑱ Battery
⑲ Plus lead wire
⑳ Rear combination & R/L turn signal lamp lead wire

Fig. 11-1

GS550E

GROUP 12

The information contained here supplements the GS550 Service Manual to render this Manual entirely applicable to the GS550E, and deals with the differences between the GS550 (built to the single-disc specifications) and the subject model—GS550E.

Model GS550E incorporates changes in contrast to the single-disc GS550; the changes fall under three headings, as follows:

1. Brake system
   FRONT BRAKE .....From single disc to double disc (for machines shipped to Europe and Australia only)
   REAR BRAKE.....From internally expanding type to disc type
2. Wheels (FRONT and REAR).....From spoke wheel to single-piece casting wheel
3. Suspension (FRONT and REAR) ....Spring characteristic altered (for machines shipped to Europe and Australia only)

FRONT BRAKE

In the GS550E machines shipped to Europe and Australia, the front brake is of double-disc type. Its master cylinder and caliper differ from those of the single-disc front brake in regard only to the diameters of piston and cylinder bore. This difference is due to the change in brake operating pressure.

MASTER CYLINDER

Inspection

The only difference is that the bore diameter is larger. Thus, the servicing instructions (on disassembly, reassembly and inspection) set forth in the GS550 Service Manual already in issue (which is originally for single-disc machines) with respect to the master cylinder are applicable to the subject model.

DIAMETER	STANDARD	SERVICE LIMIT
Bore	15.870 - 15.913 mm (0.6248 - 0.6265 in.)	15.925mm (0.6270 in.)
Piston	15.811 - 15.838 mm (0.6225 - 0.6235 in.)	15.799 mm (0.6220 in.)

CALIPER

Inspection

The bore diameter is smaller, there being no other difference as in the case of master cylinder.

DIAMETER	STANDARD	SERVICE LIMIT
Bore	38.180 - 38.219 mm (1.5031 - 1.5047 in.)	38.319 mm (1.5086 in.)
Piston	38.025 - 38.050 mm (1.4970 - 1.4980 in.)	37.925 mm (1.4931 in.)

Reassembly

Three brake hoses are tied into the hose joint. One is from master cylinder; One is to the left caliper; and one is to the right caliper.

When connecting the hoses to the joint, be sure to make connections as shown.

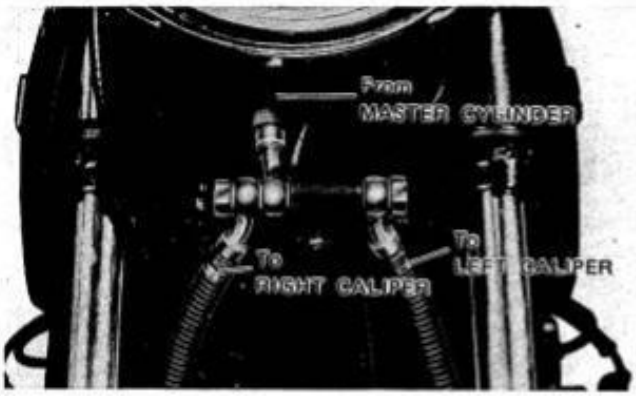

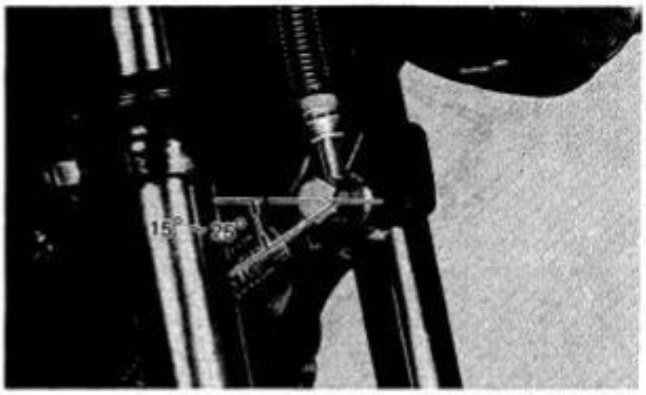

Air bleeding from brake flud circuit

To bleed air out of the calipers, proceed as described in page 115 of the GS550 manual. Bleed out from the left caliper first, and then from the right caliper.

WHEEL

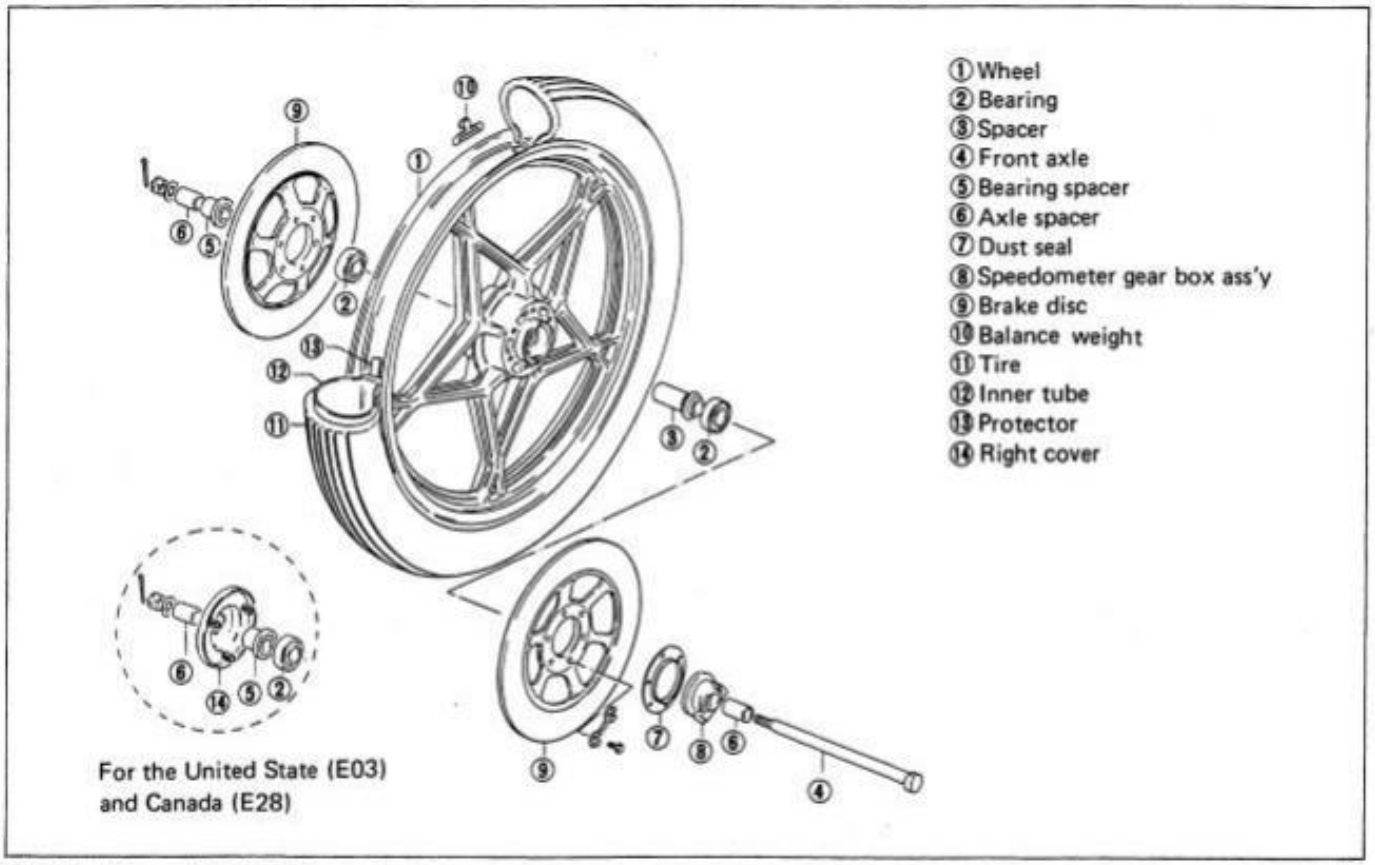

Exploded view of GS550E front wheel

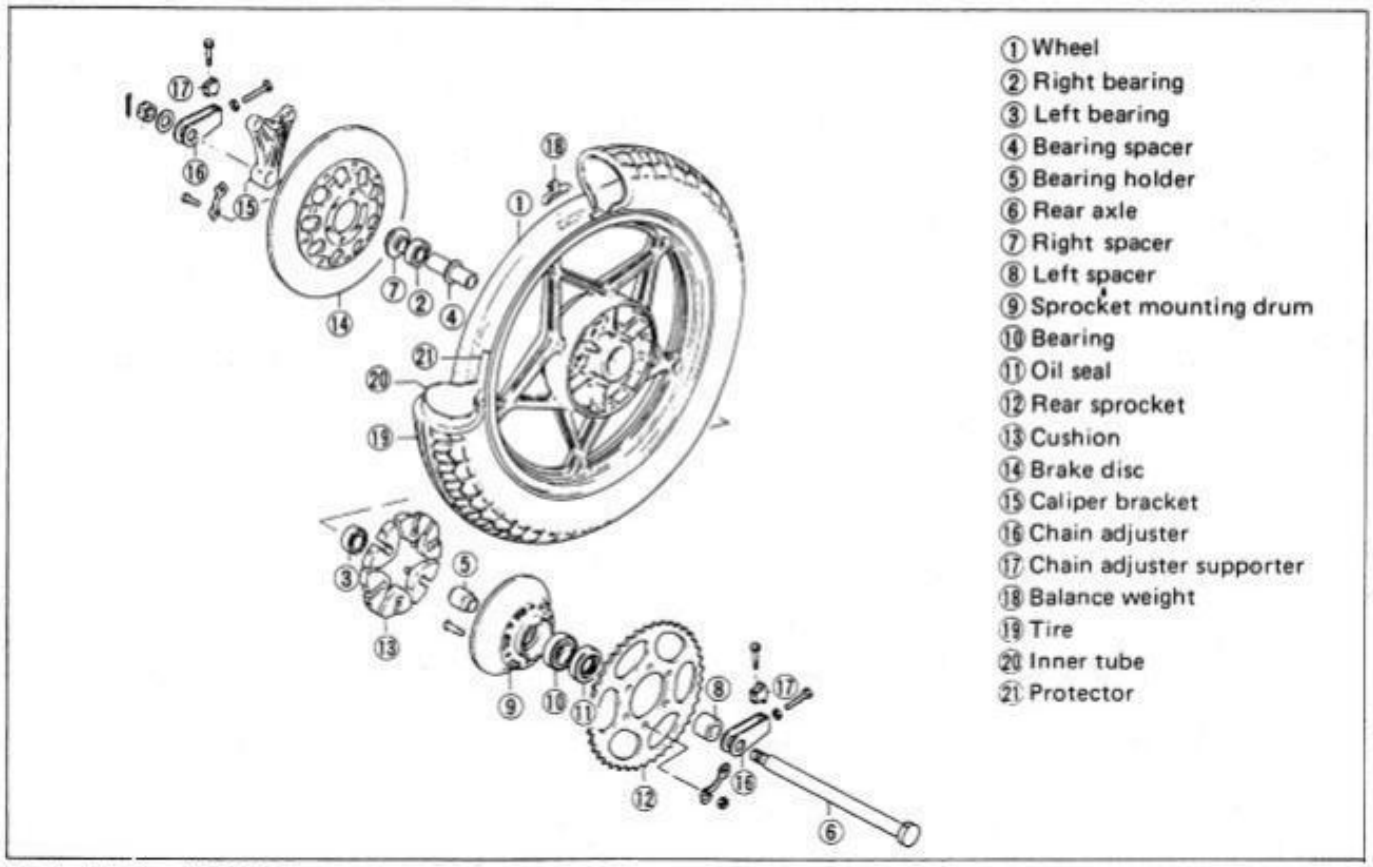

Exploded view of GS550E rear wheel

Disassembly

Either right or left caliper must be removed to allow removal of front wheel.

Tightening torque for caliper mounting bolt	2.5 - 4.0 kg-m (18.0 - 29.0 lb-ft)

NOTE: Be careful in handling the casting wheel as it is made of aluminum alloy and apt to be damaged compared with a general steel wheel.

Inspection

1. Check the wheel for cracks, bends and deflections and replace if such defects are found. Deflected wheel can not be reused after being corrected.
2. CHECKING WHEEL RUN-OUT
   Measure the run-out of the wheel in the axial and radial directions. Replace when allowable limit is exceeded.

	Axial run-out	Radial run-out
Run-out limit	2 mm (0.08 in.)	2 mm (0.08 in.)

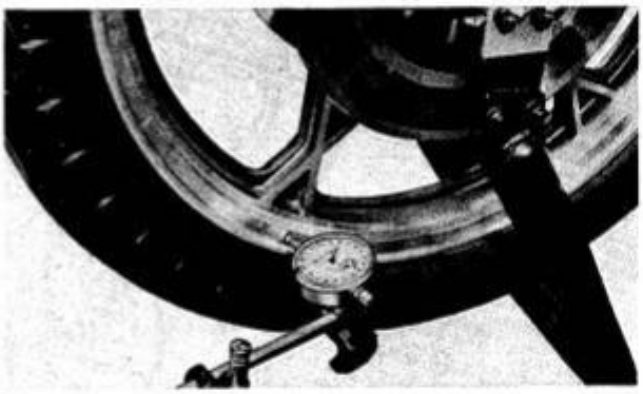

Measuring axial run-out

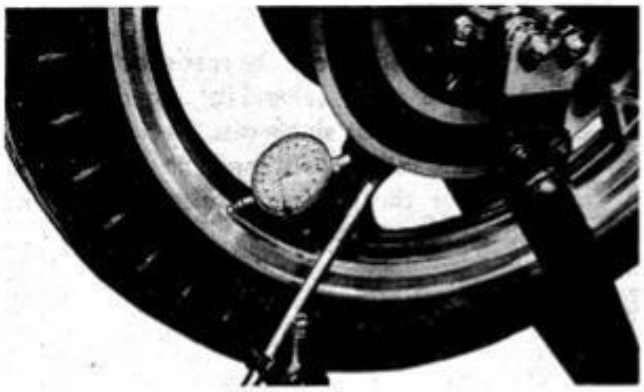

Measuring radial run-out

3. CHECKING THE WHEEL BALANCE

Check the wheel balance in the same way as in GS550. Use a balance weight of 20g or 30g when necessary.

Wheel balancer	
Weight	Part No.
20 g (0.04 lbs)	55411-47000
30 g (0.07 lbs)	55412-47000

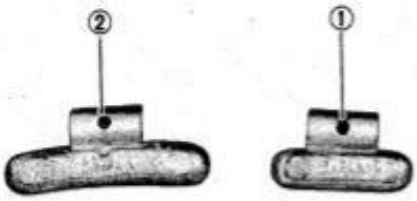

① 20g, ② 30g

NOTE: When thrusting a balance weight to the wheel (rim section), use a plastic hammer to prevent damage to the wheel. Never use a metallic hammer.

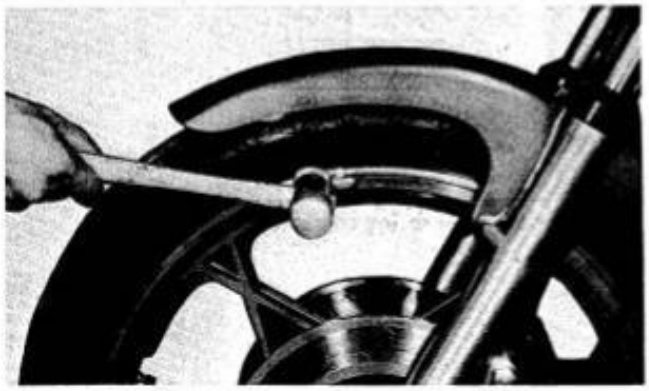

NOTE: When removing a balance weight or when cutting it for minute adjustment, use wheel weight pliers.

Wheel weight pliers

4. CHECKING DISC WEAR

In the '78 machines of the GS series, to which the GS550E belongs, front brake discs are 6 mm thick, that is, 0.7 mm less thick than those of the preceding-year models, in which the thickness is 6.7 mm. Because of this change, the service (wear) limit is lowered as indicated here:

Front disc thickness	
STANDARD	SERVICE LIMIT
6.0 mm (0.24 in.)	5.5 mm (0.22 in.)

NOTE: For U.S.A. and Canada models, single disc brake is applied for front wheel, so the service limit remains as follows.

Service Limit	6.0 mm (0.24 in)

FRONT SUSPENSION

Two front fork specifications are provided for the GS550E: one is for machines shipped to the United States (E03) and Canada (E28) and is the same as that for single-disc machines; and the other is for those shipped to Europe and Australia.

(a) U.S.A. and Canadian specifications

(b) European and Australian specifications

The difference in spring characteristic will be noted in these two graphs:

(a) U.S.A. and Canadian specifications

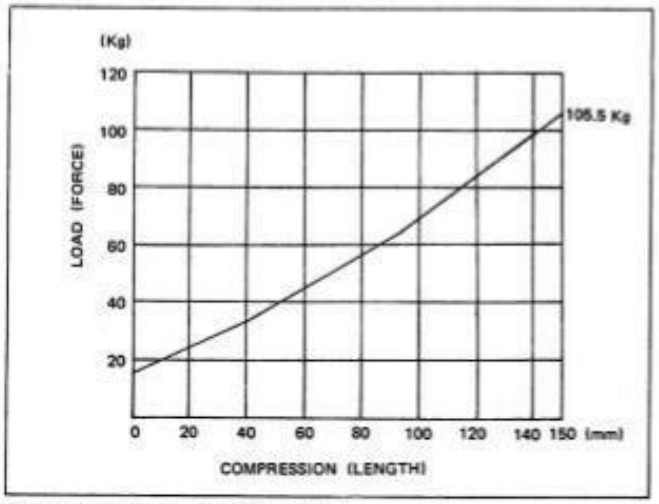

Front fork spring characteristic

(b) European and Australian specifications

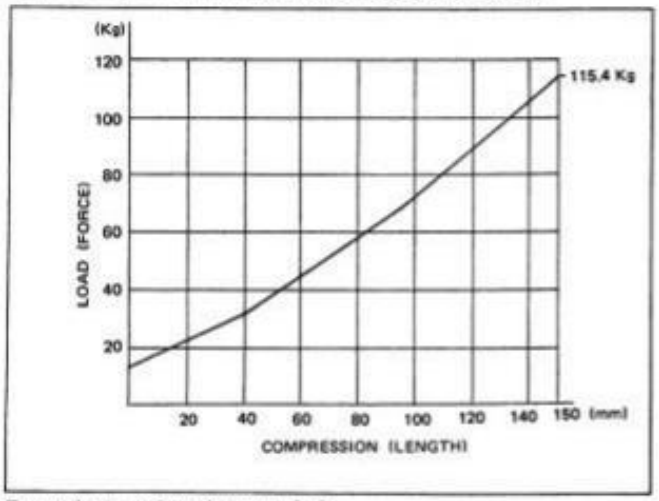

Front fork spring characteristic

REAR SUSPENSION

Just as for front suspension, the rear shock absorber specifications are two, (a) and (b). Specifications (a) are the same as for single-disc machines, spec. (b) being for the machines shipped to Europe and Australia. Note the difference in spring characteristic between the two:

(a) U.S.A. and Canadian specifications

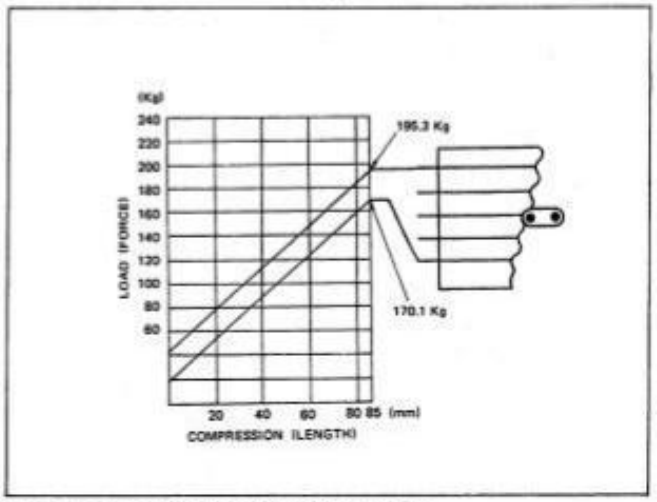

Rear shock absorber spring characteristic

(b) European and Australian specifications

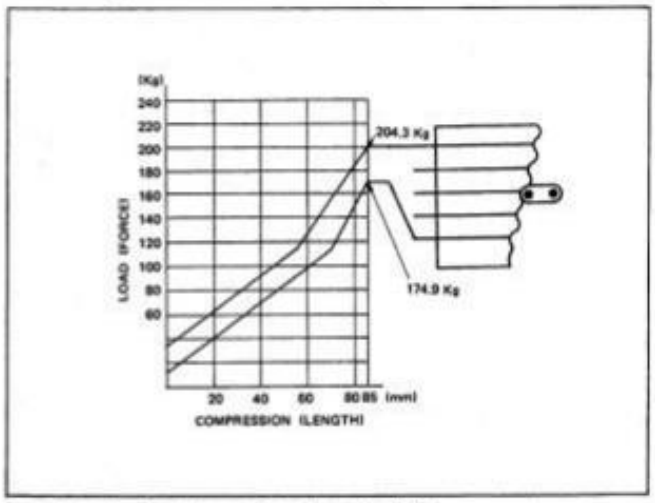

Rear shock absorber spring characteristic

REAR-BRAKE

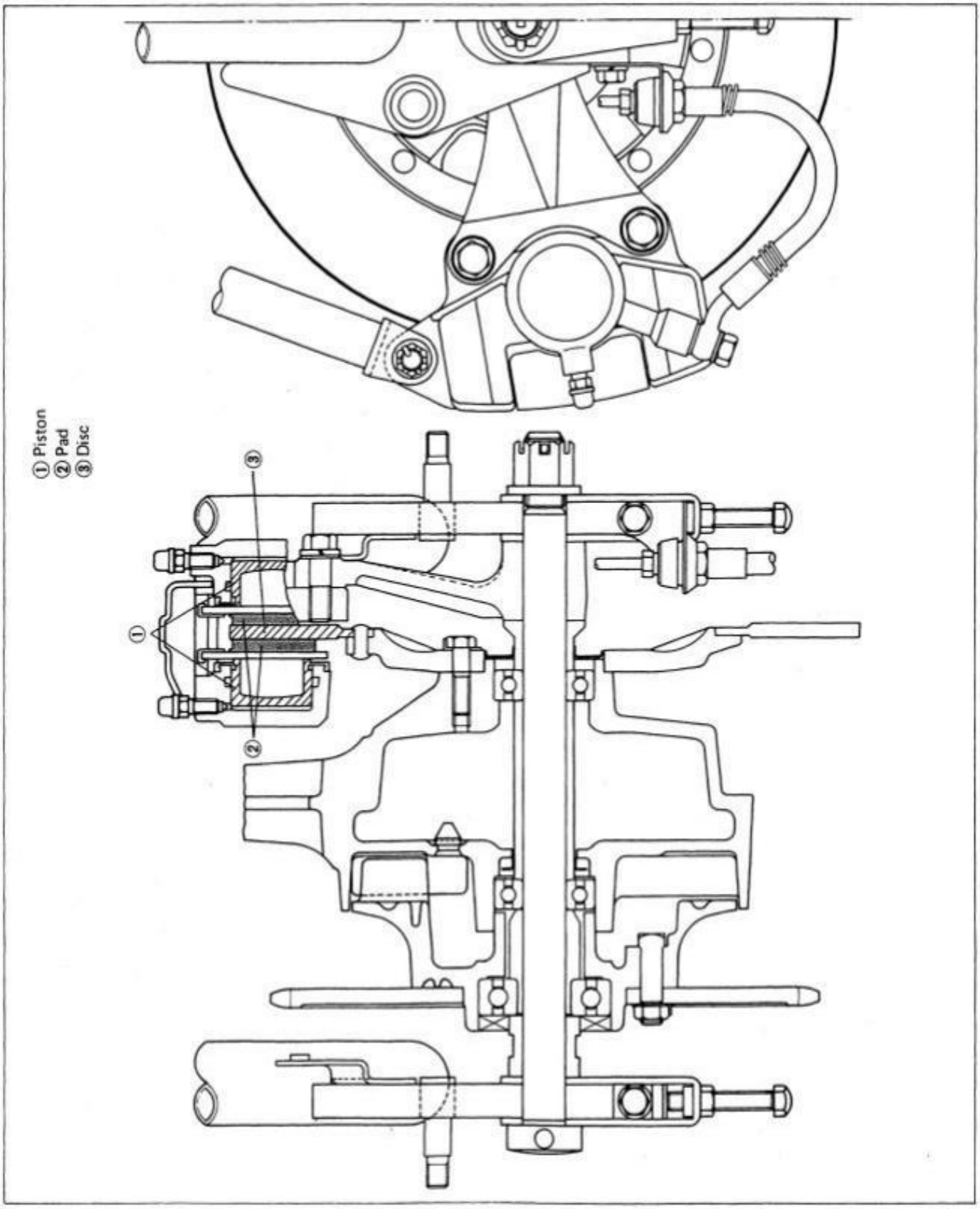

This caliper assembly is of double-piston type. Its two pistons are in opposition across the disc; operating pressure is admitted into the caliper body from a single line and divided, inside the body, into two paths leading to the respective pistons. The other features are similar to those of the front-brake caliper assembly.

CALIPER

Disassembly

1. Remove torque link rear nuts. Remove the two bolts securing the caliper assembly in place.

2. Disconnect the brake hose from the caliper assembly by removing the union bolt. Take down the caliper assembly.

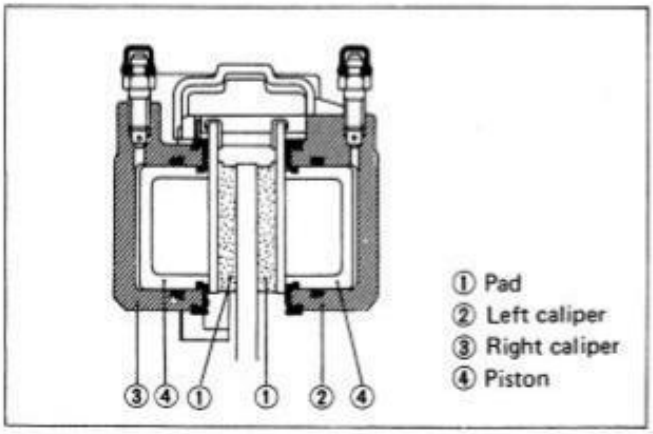

Tightening torque	
Torque link nut	2.0 - 3.0 kg-m (14.5 - 21.5 lb-ft)
Caliper bolt	2.5 - 4.0 kg-m (18.0 - 29.0 lb-ft)
Union bolt	1.5 - 2.5 kg-m (11.0 - 18.0 lb-ft)

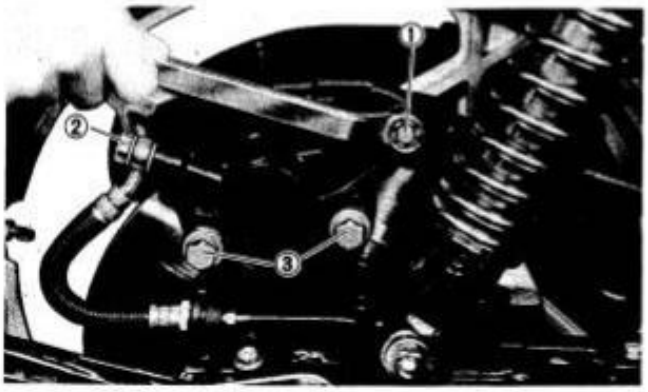

① Torque link nut, ② Union bolt
③ Caliper bolt

3. Remove the pad inspection cap. Draw out the two pins supporting each pad: a stop pin must be pulled off first from the end of each pin. At the same time, remove two springs.

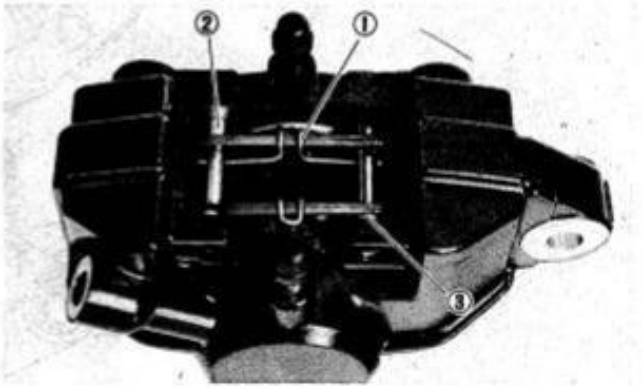

① Spring, ② Pin, ③ Stop pin

4. Remove the two bolts fastening the two caliper body halves together, and separate the two halves.

Caliper axle bolt tightening torque	2.5 - 3.5 kg-m (18.0 - 25.5 lb-ft)

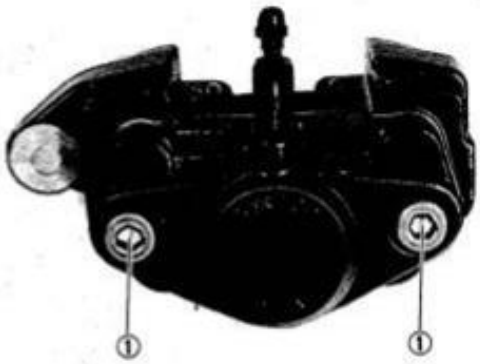

① Caliper axle bolt

5. Remove the boot from each piston. Apply compressed air (2 kg/cm², 28 psi) to the internal fluid passage to force each piston out of its bore.

Inspection

1. Mike the cylinder bore and piston to see whether these diameters are within the limits. Replacement is necessary where the limits are exceeded.

Diameter	Standard	Service limit
Bore	38.180 - 38.230 mm (1.5031 - 1.5051 in.)	38.330 mm (1.5091 in.)
Piston	38.116 - 38.148 mm (1.5006 - 1.5019 in.)	38.016 mm (1.4967 in.)

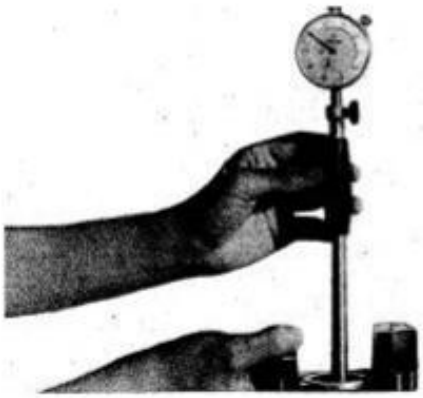

2. Inspect the piston boot and seal of each piston for wear and damage.

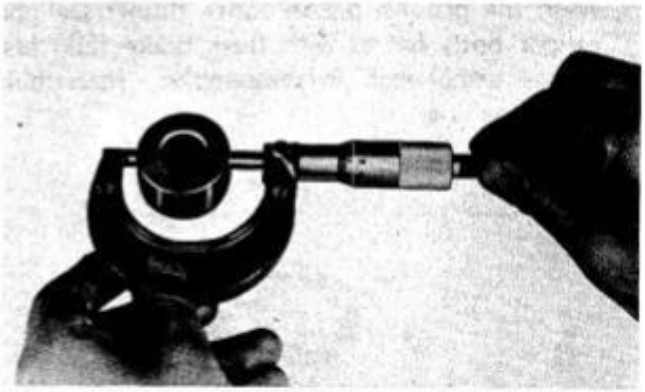

3. Check brake pads for wear. Each pad is stepped at its edge to present two edge faces, one being painted red and the other being 1.5 mm (0.06 in.) thick. The pad may be kept in service until this 1.5 mm (0.06 in.) face disappears due to wear.

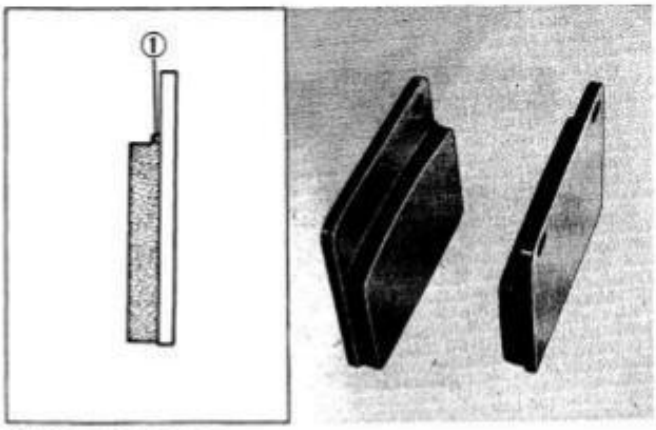

①*Wear limit line*

Reassembly

Reassemble in the procedure reverse to disassembly paying attention to the following points.

1. Wash the pistons, piston boots, rubber seal and caliper body halves with fresh brake fluid just before using each in reassembly: reassemble while washing.

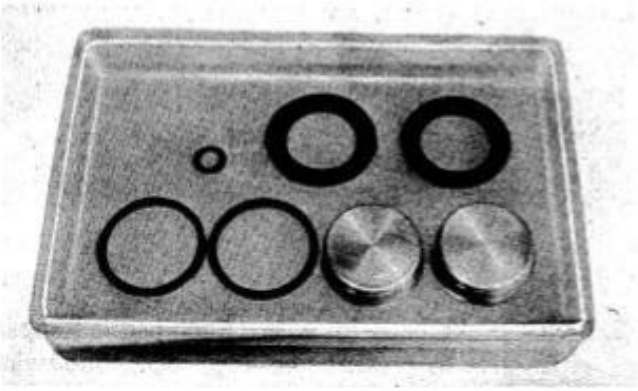

2. Fit a brake pad shim to the backside of the brake pad so that " ► hole" in the shim points frontward.

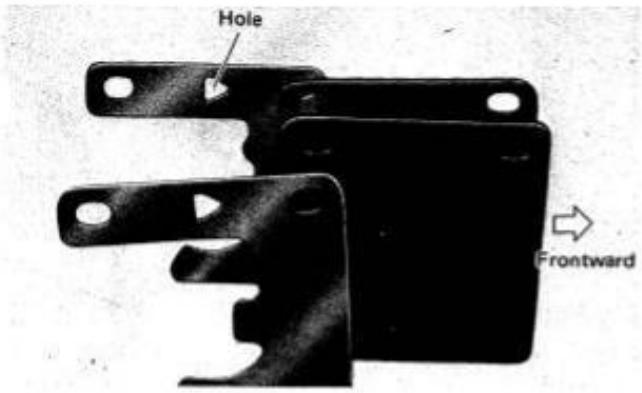

3. When reconnecting the brake hose to the caliper body, be sure to point the hose in the direction shown.

IMPORTANT: Most of the steps enumerated for reassembly of the front-brake caliper assembly are applicable to this rear-brake caliper assembly. Be sure to carry out those applicable ones.

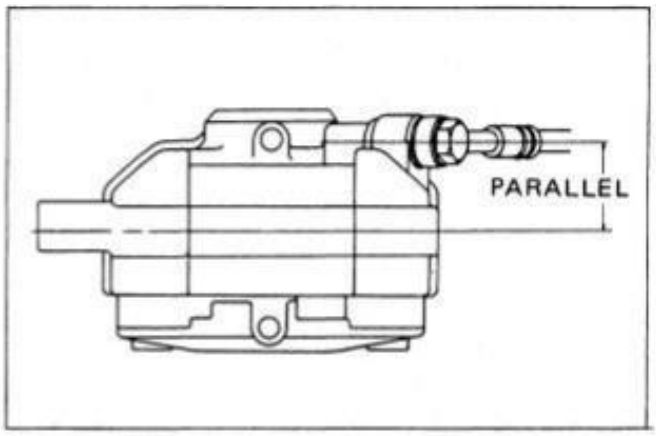

Air bleeding of the brake fluid circuit

Refer to the procedure outlined in FRONT-BRAKE ASSEMBLY; the underlying principles are the same. Differences, however, are due to the fact that the master cylinder is actuated by a pedal and that there are two bleeder valves. Bleed air out from the inboard valve first, and then from the outboard valve.

Operate the pedal in the way the brake lever is operated to drive air out. The pedal being depressed will yield and go down as the fluid is spilled into the receptacle; in the case of the front brake, the lever touches the handle. When the pedal comes within 10 mm (0.39 in.) from the footrest in so yielding, close the bleeder valve and release the pedal. Repeat the process of pumping and depressing the pedal fully to spill more fluid until air bubbles disappear in the fluid being spilled into the receptacle.

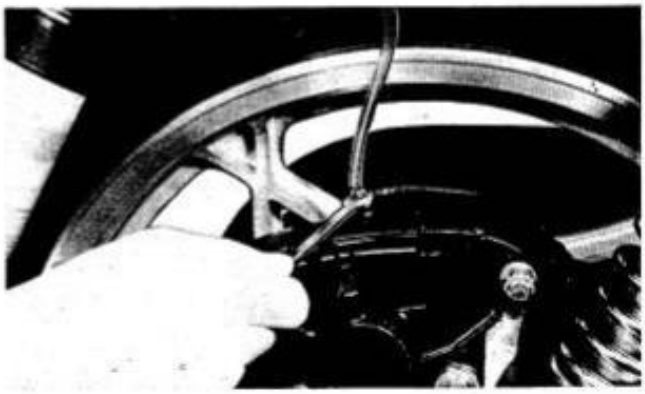

CAUTION: As in the case of front-brake caliper assembly, it is highly important that the air bleeding operation be carried out after restoring the rear brake system to the original condition.

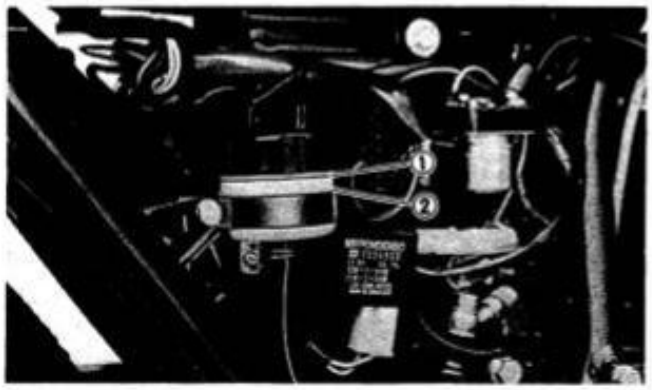

①Upper level, ②Lower level

Brake pedal adjustment

Adjust the pedal height in the following manner:

1. Loosen lock nut "B". Loosen the return stopper bolt on the brake pedal.

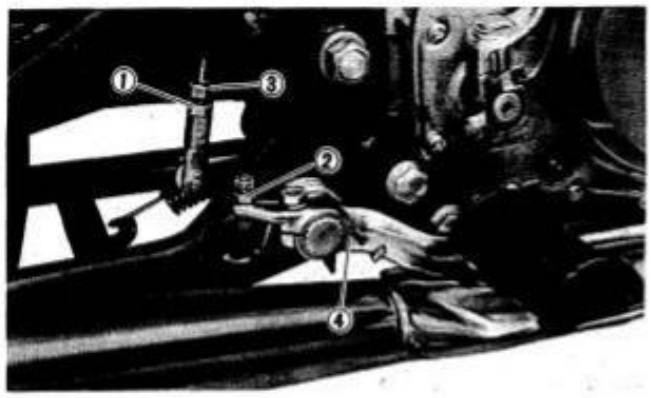

①Lock nut "A", ②Lock nut "B", ③Push rod ④Brake pedal

2. Loosen lock nut "A". Rotate the pushrod to bring the pedal to the elevation 10 mm (0.39 in.) below the top face of the footrest; and secure the pedal there by tightening the nut "A".

3. Adjust the clearance between pedal arm and return stopper to 0.5 mm (0.02 in), and tighten lock nut "B".

Pad replacement

The pads can be replaced from the caliper assembly in place, by removing the pins supporting the pads and their stop pins and springs, but this method is not recommendable because the piston boots too might come off: it is almost impossible to accurately refit the boot when the assembly is in place.

The reliable and accurate replacement is ensured by removing the caliper assembly and by installing the replacement pads in the assembly off the machine.

MASTER CYLINDER

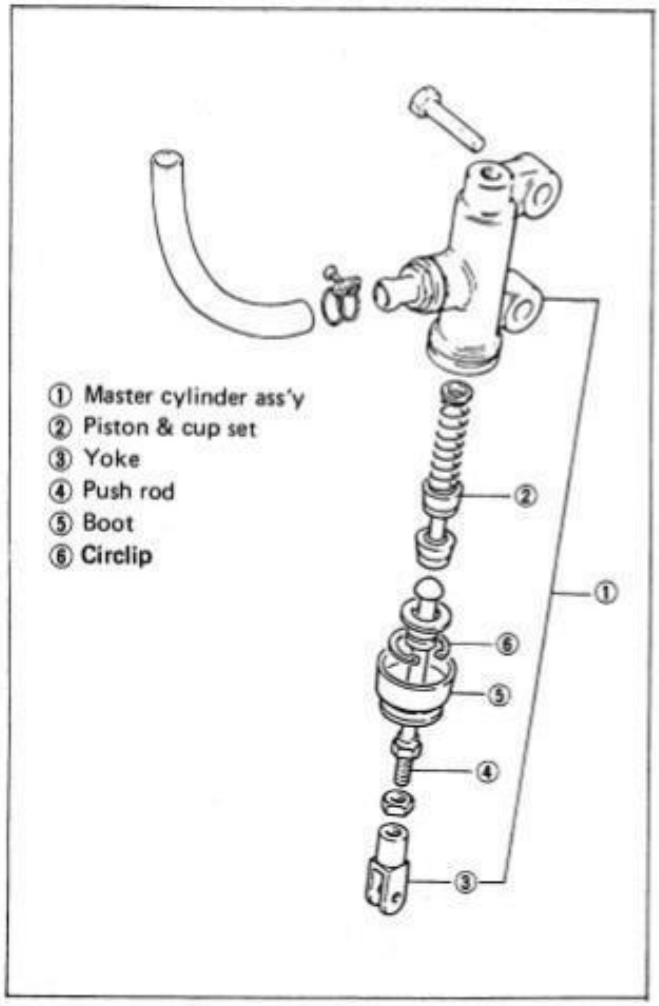

Disassembly

1. Remove the rear brake pedal.
2. Pull off the split pin from the lower end of pushrod, and disconnect the master cylinder rod from the brake pedal arm.

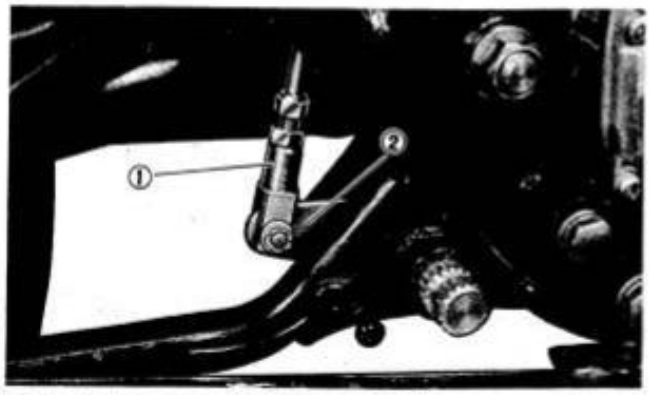

①*Push rod* ②*Brake pedal arm*

3. Remove the oil union bolt on the master cylinder, and disconnect the brake hose.
4. Disconnect the oil hose.
5. Remove the two bolts securing the master cylinder to the frame, and take down the cylinder.

Tightening torque	1.5 - 2.5 kg-m (11.0 - 18.0 lb-ft)

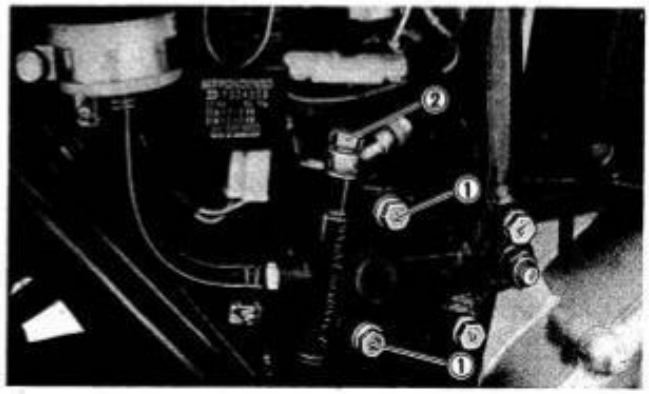

①*Master cylinder bolt,* ②*Oil union bolt*

6. Take off the boot, and pick out the circlip by using the special tool.

09900-06105	Circlip remover

7. Take out piston, check valve, coil spring and primary cup from the cylinder.

NOTE: Using a wood or soft-metal stick, push these internals out of the cylinder bore, so as not to nick or mar bore wall. Be careful, too, not to damage them.

Inspection

1. Mike the cylinder bore and piston to see whether these diameters are within the limits; if not, replace the cylinder or piston or both.

Diameter	Standard	Service limit
Bore	14.000 - 14.043 mm (0.5512 - 0.5529 in)	Over 14.055 mm (0.5533 in)
Piston	13.941 - 13.968 mm (0.5489 - 0.5499 in)	Under 13.929 mm (0.5484 in)

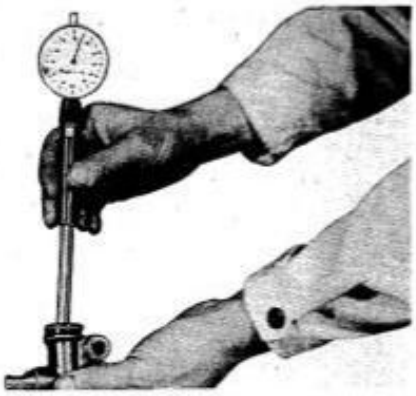

2. Inspect the primary cup and boot for wear and damage and, as necessary, replace them.

Reassembly

Reassemble the master cylinder by reversing the sequential steps of disassembly and by taking the following additional steps:

1. Be sure to apply brake fluid to the cylinder bore and all the internals to be inserted into the bore.
2. Combine the check valve, coil spring and primary cup outside the cylinder, and insert the combination into the bore, taking care not to unseat the coil spring off the check valve. Remember, the spring could readily come off the valve. Be careful not to allow the primary cup to cock inside the bore.
3. It is a good practice to use a replacement primary cup unless the cup removed in disassembly is perfectly in good condition.

4. After fitting the circlip, try to turn it in place to make sure it is snugly seated in the groove. Use of a replacement circlip is preferred to re-using the one removed in disassembly.

5. Mount the master cylinder on the frame first and make up the connection between its push rod and the brake pedal next. Be sure to lock the link pin by bending the legs of split pin apart and around the link pin.
6. When installing the brake pedal, be sure to align the match marks at the pivot part, thereby positioning the pedal correctly.
7. Carry out an air bleeding operation as outlined previously.
8. Adjust the brake pedal height as outlined previously.

BRAKE PARTS TO BE PERIODICALLY REPLACED

GS550E employs hydraulic brake for both front and rear wheels. Replace the piston and seal etc. of the master cylinder and caliper periodically once every two years. Refer to GS550 Service Manual as for the front master cylinder, caliper, piston and seal etc. Rear master cylinder and caliper to be replaced periodically are as follows.

REAR MASTER CYLINDER

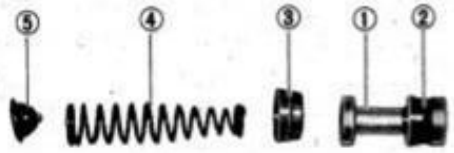

①*Piston* ②*Secondary cup*
③*Primary cup* ④*Spring*
⑤*Check valve*

REAR CALIPER

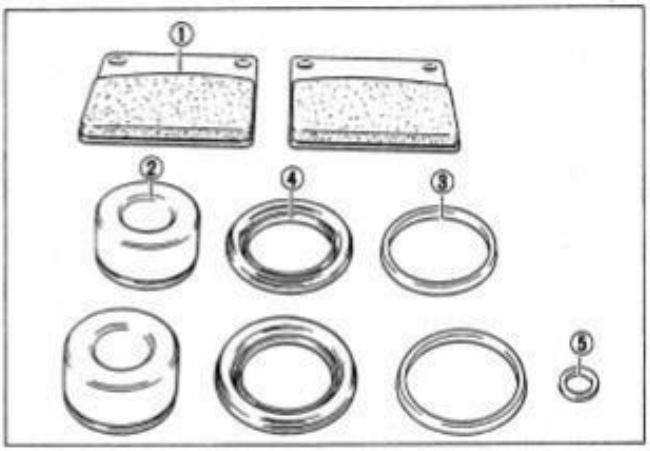

①*Pad* ②*Piston*
③*Piston seal* ④*Piston boot*
⑤*Rubber seal*

GS550L(E-03)

GROUP 13

This section provides new technical informations for GS550L, under E-03 specification, which differ from those of the GS550 and GS550E.

CONTENTS

GENERAL INFORMATION
- SPECIFICATIONS 177
- SERVICE DATA 179
- EMISSION CONTROL CARBURETOR COMPONENTS 185

CHASSIS
- FRONT FORK 186
- REAR SHOCK ABSORBER 187

WHEELS
- FRONT WHEEL 188
- TIRE AND TUBE REMOVAL 189

ELECTRICAL
- CHARGING SYSTEM 191
- INSPECTION AND SERVICING 192
- COMBINATION METER 196
- FUEL GAUGE 197

WIRE AND CABLE ROUTING 202

WIRING DIAGRAM 204

VIEW OF GS550L

Left Side

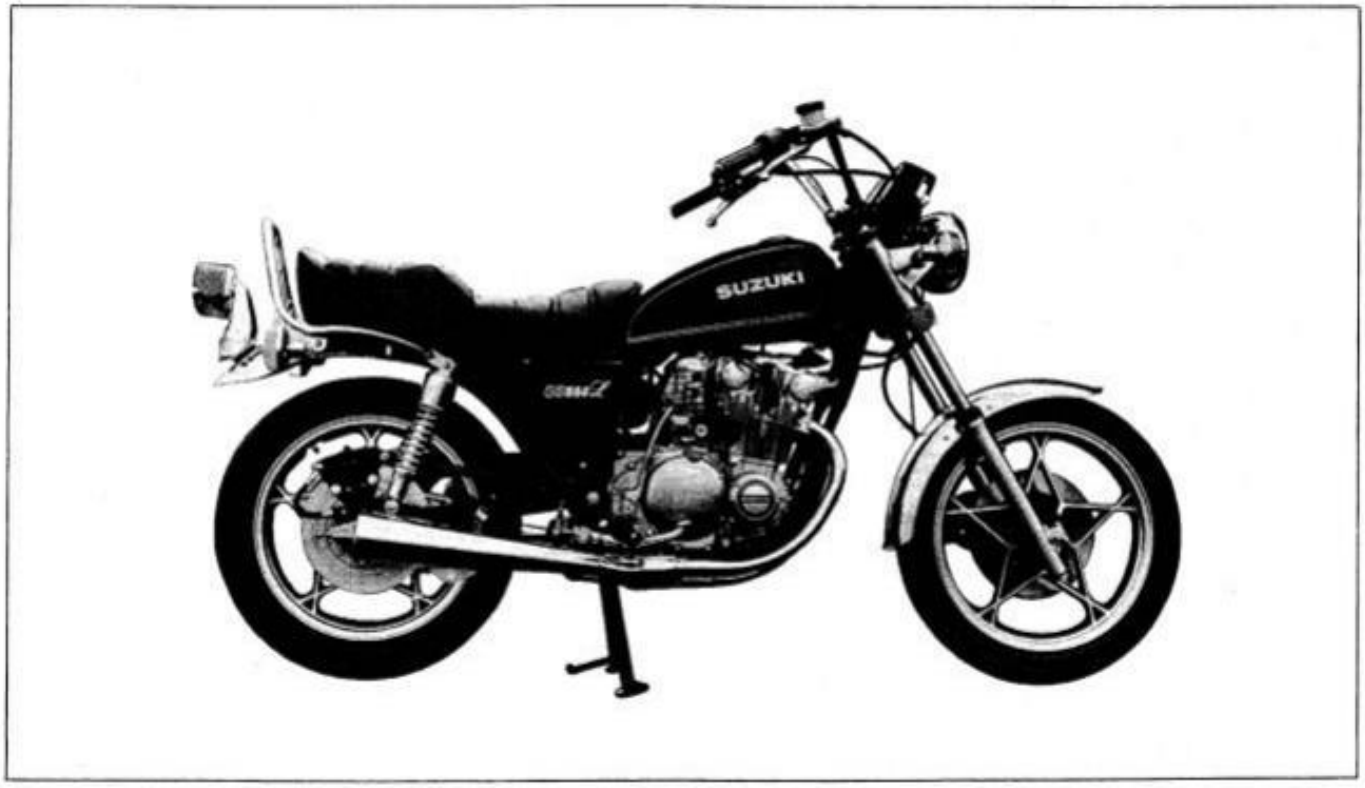

Right Side

SPECIFICATIONS

DIMENSIONS AND DRY MASS

Overall length	2 190 mm (86.2 in)
Overall width	890 mm (35.0 in)
Overall height	1 215 mm (47.8 in)
Wheelbase	1 480 mm (58.3 in)
Ground clearance	165 mm (6.5 in)
Dry mass	206 kg (454 lbs)

ENGINE

Type	Four-stroke cycle, air-cooled, DOHC
Number of cylinders	4
Bore	56.0 mm (2.205 in)
Stroke	55.8 mm (2.197 in)
Piston displacement	549 ml (33.5 cu.in)
Compression ratio	8.6 : 1
Carburetor	MIKUNI VM22SS, four
Air cleaner	Polyurethane foam element
Starter system	Electric and kick
Lubrication system	Wet sump

TRANSMISSION

Clutch	Wet multi-plate type
Transmission	6-speed constant mesh
Gearshift pattern	1-down 5-up
Primary reduction	1.977 (87/44)
Final reduction	3.333 (50/15)
Gear ratios, Low	2.666 (32/12)
2nd	1.777 (32/18)
3rd	1.380 (29/21)
4th	1.173 (27/23)
5th	1.045 (23/22)
Top	0.956 (22/23)
Drive chain	DAIDO D.I.D. 50HDL or TAKASAGO RK50SHO,110 links

CHASSIS

Front suspension	Telescopic, oil dampened
Rear suspension	Swinging arm, oil dampened, spring 5-way adjustable
Steering angle	40° (Right and Left)
Caster	62°00′
Trail	118 mm (4.6 in)
Turning radius	2.6 m (8.5 ft)
Front brake	Disc brake
Rear brake	Disc brake
Front tire size	3.25H19-4PR
Rear tire size	3.75H18-4PR

ELECTRICAL

Ignition type	Battery ignition
Ignition timing	17° B.T.D.C. below 1 500 r/min and 37° B.T.D.C. above 2 500 r/min
Spark plug	NGK B8ES or NIPPON DENSO W24ES
Battery	12V 12Ah/10HR
Generator	Three-phase A.C. generator
Fuse	15/10/10/10A
Headlight	12V 60/55W
Tail/Brake light	12V 8/23W (3/32 cp)
Turn signal light	12V 23W (32 cp)
Speedometer light	12V 3.4W
Tachometer light	12V 3.4W
Neutral indicator light	12V 3.4W
High beam indicator light	12V 3.4W
Turn signal indicator light	12V 3.4W
Oil pressure light	12V 3.4W

CAPACITIES

Fuel tank including reserve	13 L (3.4 US gal)
reserve	3.0 L (3.2 US qt)
Engine oil	2.4 L (2.5 US qt)
Front fork oil	217 ml (7.33 US oz) in each leg

SERVICE DATA

Valve + Guide

mm (in)

ITEM		STANDARD	LIMIT
Valve lift	IN	7.2 (0.28)	–
	EX	7.0 (0.27)	–
Tappet clearance or valve clearance (cold engine)	IN	0.03 – 0.08 (0.001 – 0.003)	
	EX	0.03 – 0.08 (0.001 – 0.003)	
Valve guide – Valve stem clearance	IN	0.025 – 0.055 (0.0009 – 0.0022)	0.35 (0.014)
	EX	0.040 – 0.070 (0.0016 – 0.0028)	0.35 (0.014)
Valve guide I.D.	IN & EX	7.000 – 7.015 (0.2756 – 0.2762)	–
Valve stem O.D.	IN	6.960 – 6.975 (0.2740 – 0.2746)	–
	EX	6.945 – 6.960 (0.2734 – 0.2740)	–
Valve stem deflection	IN & EX	–	0.05 (0.002)
Valve head thickness	IN & EX	–	0.5 (0.02)
Valve seat width	IN & EX	1.0 – 1.2 (0.04 – 0.05)	
Valve head radial runout	IN & EX	–	0.03 (0.001)
Valve spring free length	INN	35.3 – 37.0 (1.39 – 1.46)	33.9 (1.33)
	OUT	43.0 – 43.25 (1.69 – 1.70)	41.3 (1.63)
Valve spring tension	INN	29.3 – 34.0 kg/23 (64.59 – 74.96 lbs)/(0.91)	–
	OUT	50.4 – 58.3 kg/27 (111.11 – 128.53 lbs)/(1.06)	–

Camshaft

mm (in)

ITEM		STANDARD	LIMIT
Cam height	IN	35.485 – 35.515 (1.3970 – 1.3982)	35.190 (1.3854)
	EX	35.285 – 35.315 (1.3892 – 1.3904)	34.990 (1.3776)
Camshaft – Journal clearance	IN & EX	0.020 – 0.054 (0.0008 – 0.0021)	0.150 (0.0059)
Camshaft journal holder I.D.	IN & EX	22.000 – 22.013 (0.8661 – 0.8667)	–
Camshaft journal O.D.	IN & EX	21.959 – 21.980 (0.8645 – 0.8654)	–
Camshaft deflection	IN & EX	–	0.10 (0.004)
Cam chain 20 pitch length		–	157.80 (6.213)

Piston + Ring + Cylinder

mm (in)

ITEM		STANDARD	LIMIT
Compression pressure		9 – 12 kg/cm² (128 – 171 psi)	6.5 kg/cm² (92.4 psi)
Difference between cylinders		–	2 kg/cm² (28.5 psi)
Piston – Cylinder clearance		0.050 – 0.060 (0.0020 – 0.0024)	0.120 (0.0047)
Cylinder bore		56.000 – 56.015 (2.2047 – 2.2053)	56.080 (2.2079)
Piston dia./Measurement point		55.945 – 55.960/15 (2.2026 – 2.2031)/(0.59)	55.880 (2.2000)
Cylinder distortion		–	0.2 (0.008)
Cylinder head distortion		–	0.2 (0.008)
Piston ring free end gap	1st	Approx. 6.5 (0.26)	5.2 (0.20)
	2nd	Approx. 6.5 (0.26)	5.2 (0.20)
Piston ring end gap	1st	0.1 – 0.3 (0.004 – 0.012)	0.7 (0.03)
	2nd	0.1 – 0.3 (0.004 – 0.012)	0.7 (0.03)
Piston ring – Groove clearance	1st	0.020 – 0.055 (0.0008 – 0.0022)	0.180 (0.0071)
	2nd	0.020 – 0.060 (0.0008 – 0.0024)	0.150 (0.0059)
Piston ring groove width	1st	1.21 – 1.23 (0.047 – 0.048)	–
	2nd	1.21 – 1.23 (0.047 – 0.048)	–
	Oil	2.51 – 2.53 (0.099 – 0.100)	–
Piston ring thickness	1st	1.175 – 1.190 (0.0463 – 0.0469)	–
	2nd	1.170 – 1.190 (0.0461 – 0.0469)	–
Piston pin – Pin bore clearance		0.002 – 0.013 (0.0001 – 0.0005)	0.120 (0.0047)
Piston pin bore I.D.		16.002 – 16.008 (0.6300 – 0.6302)	–
Piston pin O.D.		15.995 – 16.000 (0.6297 – 0.6300)	–

Crankshaft

mm (in)

ITEM	STANDARD	LIMIT
Con-rod small end bore – Piston pin clearance	0.006 – 0.019 (0.0002 – 0.0007)	0.080 (0.0031)
Con-rod small end bore I.D.	16.006 – 16.014 (0.6302 – 0.6305)	–
Piston pin O.D.	15.995 – 16.000 (0.6297 – 0.6300)	–
Big end side clearance	0.10 – 0.65 (0.004 – 0.026)	1.00 (0.039)
Con-rod big end wear	–	0.08 (0.003)
Crankshaft runout	–	0.05 (0.002)

Oil Pump

mm (in)

ITEM	STANDARD	LIMIT
Oil pump reduction ratio	1.821 (87/44 x 35/38)	
Oil pressure (for 60°C)	Above 0.1 kg/cm² (1.42 psi), Below 0.5 kg/cm² (7.11 psi) at 3 000 r/min	
Tip clearance	–	0.20 (0.008)
Outer rotor clearance	–	0.25 (0.010)
Side clearance	–	0.15 (0.006)

Clutch

mm (in)

ITEM	STANDARD	LIMIT
Drive plate thickness	2.9 – 3.1 (0.11 – 0.12)	2.6 (0.10)
Drive plate distortion	–	0.2 (0.008)
Driven plate thickness	1.6 (0.06)	–
Driven plate distortion	–	0.1 (0.004)
Drive plate claw width	11.8 – 12.0 (0.46 – 0.47)	11.0 (0.43)
Clutch spring free length	38.4 (1.51)	35.9 (1.41)
Pri. drive – Driven gear backlash	0 – 0.03 (0 – 0.001)	0.08 (0.003)

Transmission

mm (in)

ITEM		STANDARD	LIMIT
Primary reduction		1.977 (87/44)	
Final reduction		3.333 (50/15)	
Gear ratios,	Low	2.666 (32/12)	
	2nd	1.777 (32/18)	
	3rd	1.380 (29/21)	
	4th	1.173 (27/23)	
	5th	1.045 (23/22)	
	Top	0.956 (22/23)	
Gear backlash	1st, 2nd, 3rd and 4th	0 – 0.04 (0 – 0.002)	0.09 (0.004)
	5th and Top	0.05 – 0.10 (0.002 – 0.004)	0.15 (0.006)
Shift fork – Groove clearance		0.1 – 0.3 (0.004 – 0.012)	0.5 (0.020)
Shift fork groove width		5.5 – 5.6 (0.217 – 0.220)	–
Shift fork thickness		5.3 – 5.4 (0.209 – 0.213)	–
Drive chain size		DAIDO 50HDL or TAKASAGO RK50SHO, 110 links	
20 pitch length		317.1 – 317.7 (12.48 – 12.51)	320.0 (12.60)

Carburetor

mm (in)

ITEM	SPECIFICATION
Idle r/min	1 000 – 1 200 r/min
Carburetor type	MIKUNI VM22SS
I.D. No.	47110
Bore size	22 (0.87)
Float height	24.0 ± 1.0 (0.95 ± 0.04)
Fuel level	4.0 ± 1.0 (0.16 ± 0.04)
Air screw	PRE-SET
Cut away	1.5
Jet needle	5DL37-3
Pilot screw	PRE-SET
Pilot jet	#15
Pilot outlet	0.6
Needle jet	0 – 4
By-pass	0.7
Main jet	#80

Electrical

mm(in)

ITEM	STANDARD	LIMIT
Ignition timing	17° B.T.D.C. below 1 500 r/min and 37° B.T.D.C. above 2 500 r/min	
Firing order	1. 2. 4. 3.	
Spark plug	NGK B8ES or NIPPON DENSO W24ES	
Spark plug gap	0.6 – 0.8 (0.024 – 0.031)	
Contact point gap	0.3 – 0.4 (0.012 – 0.016)	
Dwell angle	190°	
Spark performance	Over 8 (0.3) at 1 atm	
Condensor capacity	0.25 ± 0.03μF	
Ignition coil resistance (primary)	Approx. 4Ω	
Ignition coil resistance (secondary)	Approx. 15 kΩ	
Battery capacity	12V 43.2kC (12 Ah)/10 HR	
Specific gravity	1.28 at 20°C	
Regulated voltage	14 – 15.5V at 5 000 r/min	
Fuse size	15/10/10/10A	
Generator no-load data	More than 70V (AC) at 5 000 r/min	
Starter motor brush length	12 – 13 (0.47 – 0.51) . . . . . MITSUBA	6 (0.24)
	14 (0.55) . . . DENSO	9 (0.35)

Brake + Wheel

mm (in)

ITEM		STANDARD	LIMIT
Axle runout	Front & Rear	–	0.25 (0.010)
Brake disc thickness	Front	6.5 – 6.9 (0.26 – 0.27)	6.0 (0.24)
	Rear	6.5 – 6.9 (0.26 – 0.27)	6.0 (0.24)
Brake disc runout	Front & Rear	–	0.30 (0.012)
Master cylinder cylinder dia.	Front	14.00 (0.551)	–
	Rear	14.00 (0.551)	–
Master cylinder piston dia.	Front	13.96 (0.550)	–
	Rear	13.96 (0.550)	–
Brake caliper cylinder bore	Front	42.85 (1.687)	–
	Rear	38.18 (1.503)	–
Brake caliper piston dia.	Front	42.82 (1.686)	–
	Rear	38.15 (1.502)	–
Wheel rim runout	Radial & Axial	–	2.0 (0.08)
Tire size	Front	3.25H19 – 4PR	
	Rear	3.75H18 – 4PR	
Tire tread depth	Front	–	1.6 (0.06)
	Rear	–	2.0 (0.08)

Tire air pressure

Cold Inflation Tire Pressure	FRONT						REAR					
	Solo Riding			Dual Riding			Solo Riding			Dual Riding		
	kPa	psi	kg/cm²	kPa	psi	kg/cm²	kPa	psi	kg/cm²	kPa	psi	kg/cm²
Normal Riding	175	25	1.75	175	25	1.75	200	28	2.00	225	32	2.25
Continuous High Speed Riding	200	28	2.00	200	28	2.00	225	32	2.25	280	40	2.80

Suspension

mm(in)

ITEM		STANDARD	LIMIT
Front fork stroke		160 (6.30)	
Rear wheel travel		100 (3.9)	
Front spring free length	Lower	467.0 (18.39)	451 (17.76)
	Upper	165.8 (6.53)	153 (6.02)
Fork oil level		229 (9.02)	
Swinging arm pivot shaft runout		–	0.3 (0.012)

Capacity

mm (in)

ITEM		SPECIFICATION
Fuel tank including reserve		13 L (3.4/2.9 US/Imp gal)
	reserve	3.0 L (3.2/2.6 US/Imp qt)
Engine oil	Change	2.4 L (2.5/2.1 US/Imp qt)
	Filter change	2.6 L (2.7/2.3 US/Imp qt)
	Overhaul	2.7 L (2.8/2.4 US/Imp qt)
Front fork oil (each leg)		217 ml (7.33/7.64 US/Imp oz)
Fuel type		Use only unleaded or low-lead type gasoline of at least 85 – 95 pump octane ($\frac{R+M}{2}$ method) or 89 octane or higher rated by the Research method.
Engine oil type		SAE 10W/40
Front fork oil type		Mixture ratio SAE 10W/30 : SAE 5W/20 = 1 : 1

Wattage (W)

Head light	HI	60
	LO	55
Tail/Brake light		8/23
Turn signal light		23
Turn signal indicator light		3.4
Neutral indicator light		3.4
High beam indicator light		3.4
Speedometer light		3.4
Tachometer light		3.4
Oil pressure light		3.4

EMISSION CONTROL CARBURETOR COMPONENTS

The GS550L utilizes a specially manufactured carburetor to limit emissions. Emission type carburetors require different components and other special adjustments if they are to perform properly.
There are seven (7) carburetor mixture control components in each carburetor assembly. Three (3) of these components are machined to much closer tolerances than standard carburetor jets. These three (3) jets, MAIN JET, NEEDLE JET, PILOT JET, must not be replaced by standard jets. To aid identification of these three (3) jets a different style letter and number are used. If replacement of these close tolerance jets becomes necessary, be sure to replace them with the same type of close tolerance jet marked in the same manner as the examples shown below.

Emission Type Figures Used On Close Tolerance Jet Components	1 2 3 4 5 6 7 8 9 0

The throttle Slide and the Jet Needles are not special tolerance components. Either of these two parts may be replaced by standard tolerance parts, provided that they are the same size. The carburetor specifications for the emission-controlled GS550L are as follows.

Carburetor I.D. No.	Main Jet	Needle Jet	Jet Needle	Cut Away	Pilot Jet	Air Screw	Pilot Screw
47110	#80	0-4	5DL37-3	1.5	#15	PRE-SET	PRE-SET
						DO NOT ADJUST	

DO NOT ADJUST THE AIR SCREW AND PILOT SCREW. Adjusting, interfering with, replacing, or resetting of either of these adjustable metering components may affect the carburetor performance adversely and cause the machine to exceed the emission levels. Tampering with either of these two adjustments may also subject the person to fines under the federal emission regulations and also the state regulations regarding tempering. The air screw and pilot screw are pre-set by the factory using specialized testing and adjusting procedures. It is not possible to duplicate these adjustments. If persons, who are unaware of these special adjustments or the anti-tampering laws, have tampered with the carburetor adjustments, the Suzuki dealer should contact the distributor's representative for further technical information and assistance.

FRONT FORK

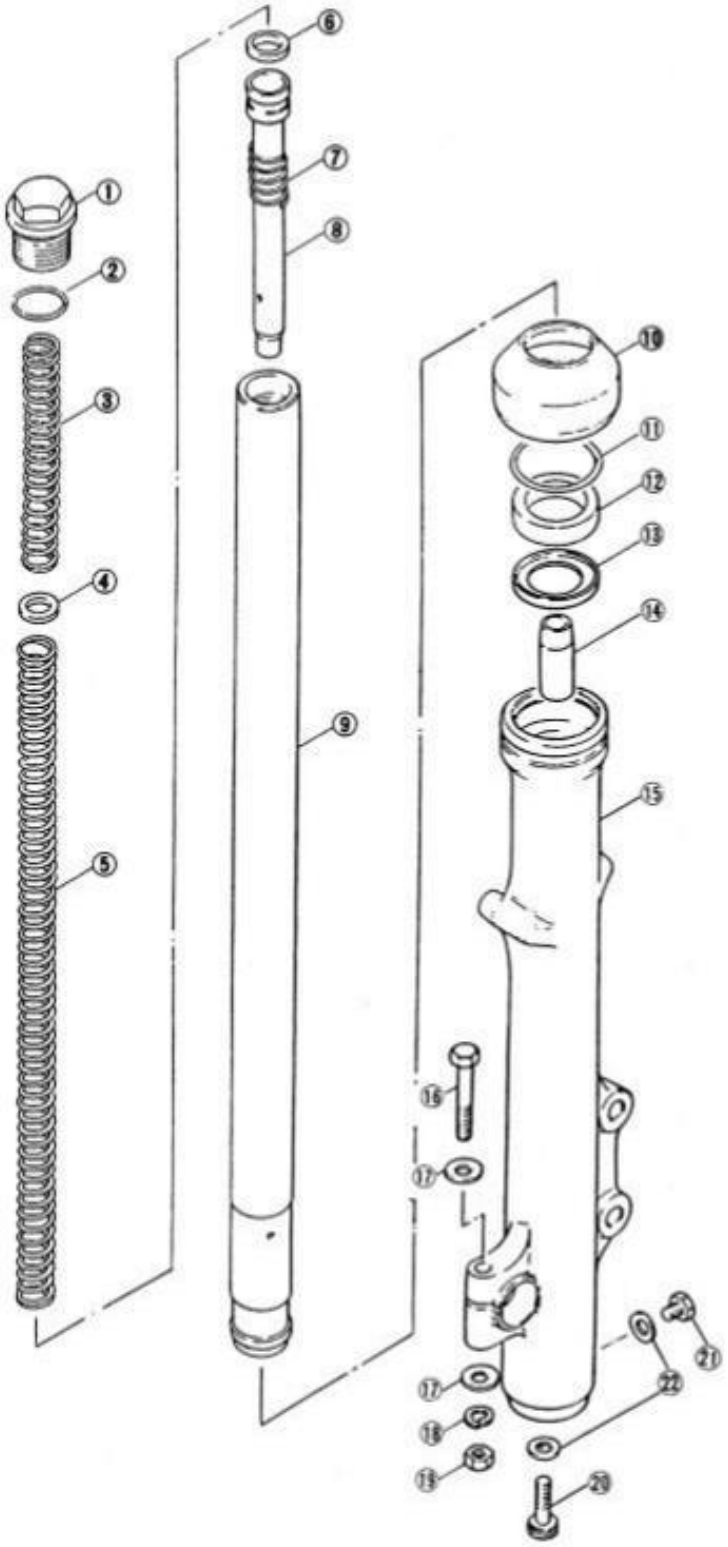

① Cap bolt
② O ring
③ Upper spring
④ Washer
⑤ Lower spring
⑥ Piston ring
⑦ Rebound spring
⑧ Damper rod
⑨ Inner tube
⑩ Dust seal
⑪ Oil seal stopper ring
⑫ Oil seal
⑬ Oil seal spacer
⑭ Oil lock piece
⑮ Outer tube
⑯ Pinch bolt
⑰ Washer
⑱ Lock washer
⑲ Nut
⑳ Allen bolt
㉑ Drain plug
㉒ Gasket

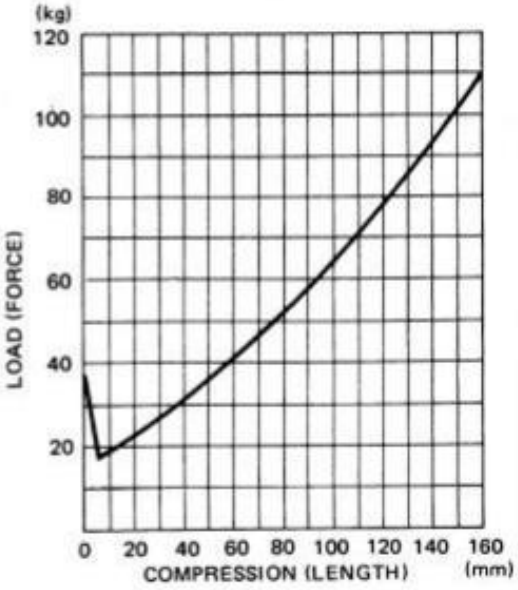

FRONT FORK SPRING CHARACTERISTICS

REAR SHOCK ABSORBER

Hydraulic dampers, each fitted with a coil spring, absorb road shocks in the rear suspension. The spring preload can be varied in five steps. The total damping stroke is 85 mm (3.35 in).

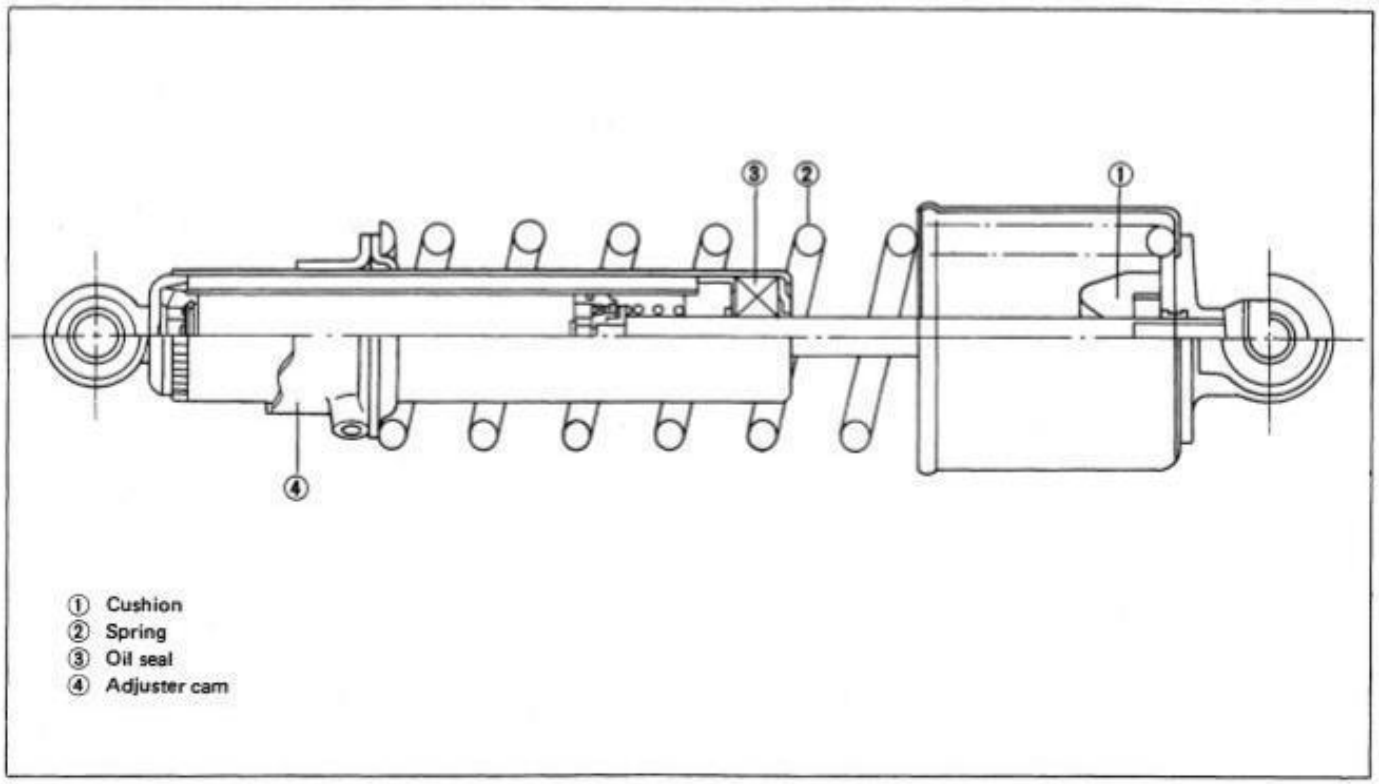

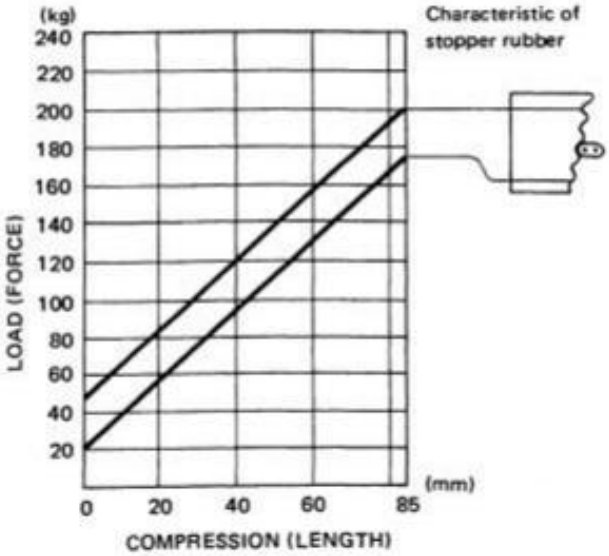

FRONT WHEEL

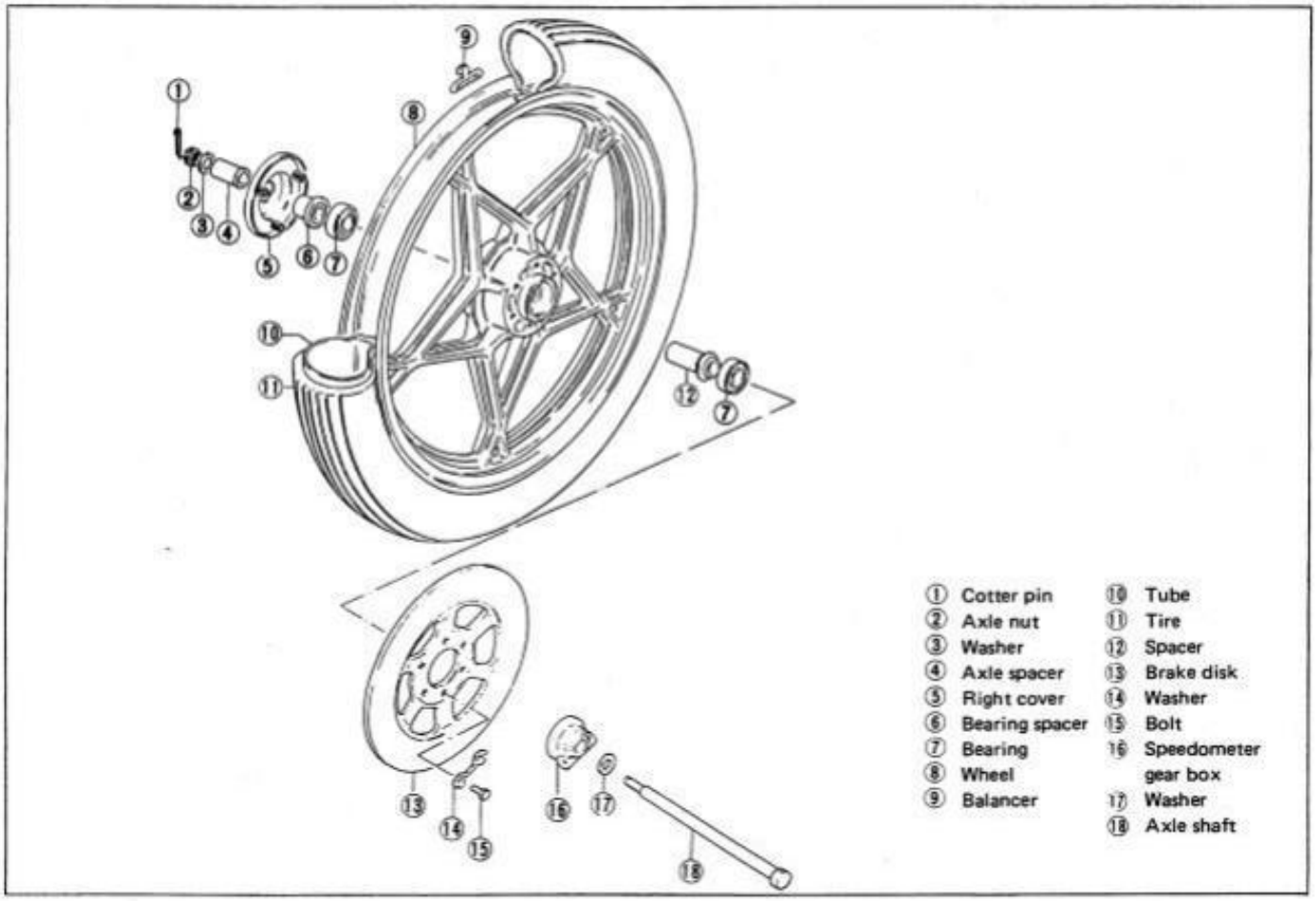

DISASSEMBLY

1. Lift the front wheel off the floor by raising up the engine, with the center stand and jack resting firmly on the floor.
2. Loosen axle nut ② after pulling off cotter pin ①, and loosen axle pinch bolt ③
3. Draw out the axle shaft and take off the wheel.

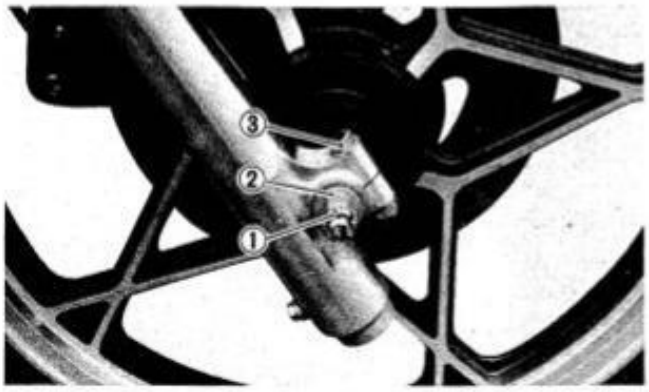

Tightening torque	
Axle pinch bolt	15 – 25 N·m (1.5 – 2.5 kg-m / 11.0 – 18.0 lb-ft)
Axle nut	36 – 52 N·m (3.6 – 5.2 kg-m / 26.0 – 37.5 lb-ft)

TIRE AND TUBE REMOVAL

- Mark the position of the valve stem and rotational direction of the tires with chalk.
- Remove the valve cap and let out the air.
- Remove the valve fastening nut and fully loosen the bead protector nut.

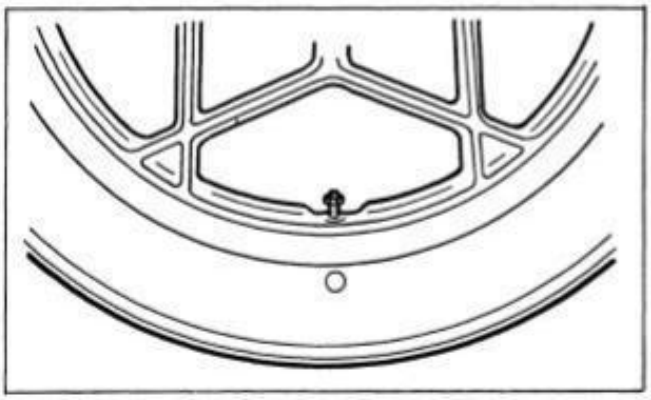

- Step on the tire bead, push it down and as shown below, install the five wheel rim protectors (special tools) to the wheel.

09941-94510	Wheel rim protector
09950-74510	Tire bead breaker

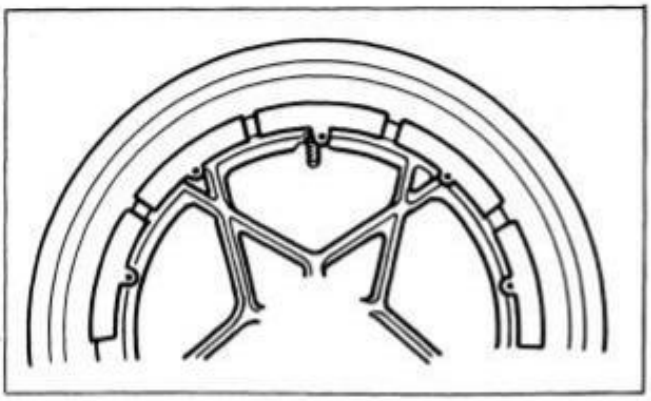

- Using flat tire levers, work the tire bead over the rim, starting near the valve stem.

CAUTION: 1. Always use the wheel rim protectors. If not, the tire rim could be damaged by the tire lever.
2. The tire lever should be applied over the wheel rim protectors.

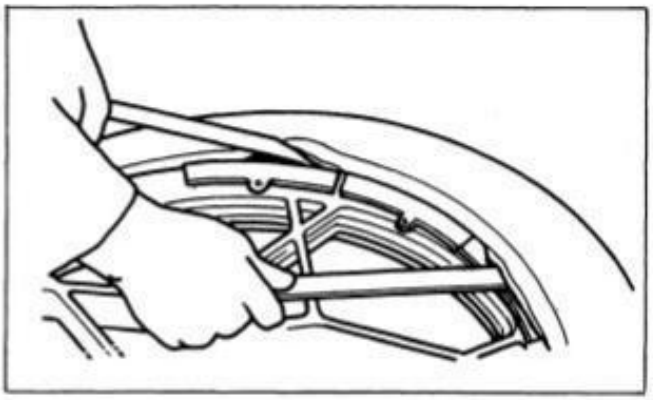

- Remove the tube.
- Remove the tire from the wheel.

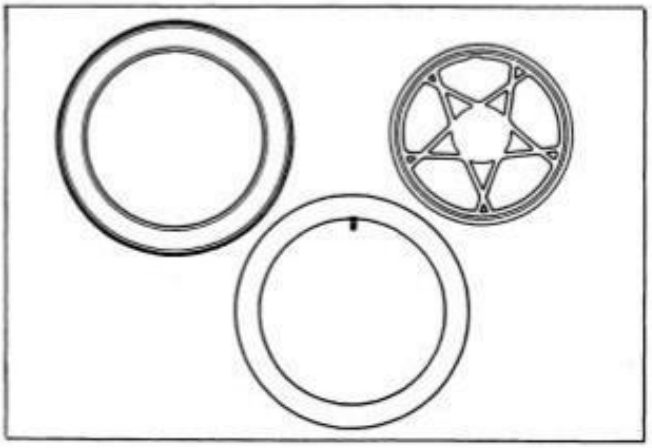

REASSEMBLY

- Inflate the tube sufficiently so that the tube does not fold.
- Push one side of the tire beads into the wheel rim. Be sure that the embossed arrow mark on the tire faces toward the rotational direction of the wheel.

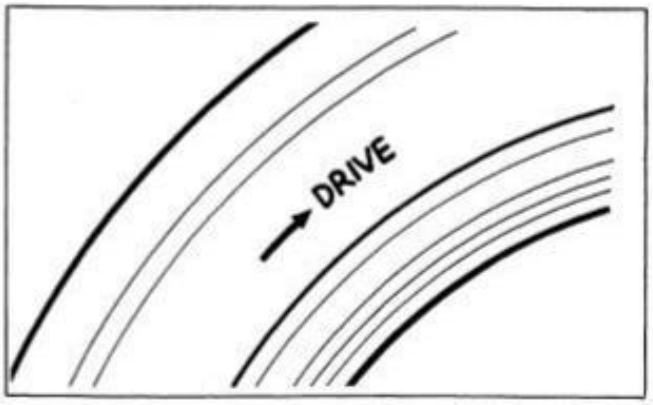

- Next, install the tube, insert the valve into the rim, and tighten the valve nut temporarily. An arrow indicating the rotational direction is marked on the rear tire.
  A yellow mark is provided on the valve portion to aid checking of the tire balance.

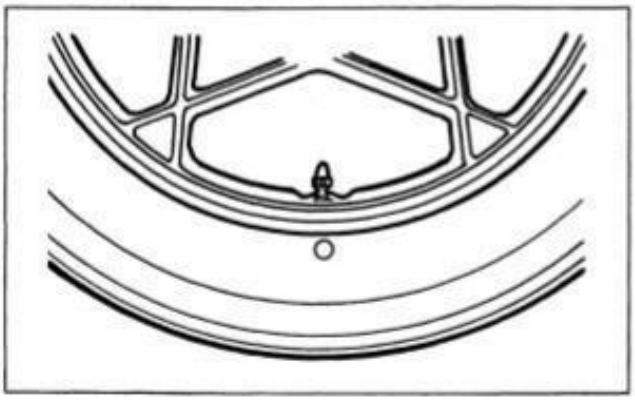

- Apply soapy water to the tire bead.
- Hook the bead protector on the bead portion of the tire.
- Fit the rest of the tire using tire levers in a position well away from the valve.

CAUTION: 1. Avoid inserting the tire lever too deeply into the tube (to avoid damaging the tube).
2. As in tire removal, use the wheel rim protectors.

- By pushing the tire, confirm that the tube is not caught between the rim and tire.
- Inflate the tire to the specified pressure (see page 184).
- Tighten the bead protector nut and then the valve nut.
- Fit the valve cap to the valve.

CHARGING SYSTEM

The GS550E is provided with a regulator and a rectifier but the new GS550L with an integrated type regulator/rectifier.
The following diagram shows the charging circuits for both models:

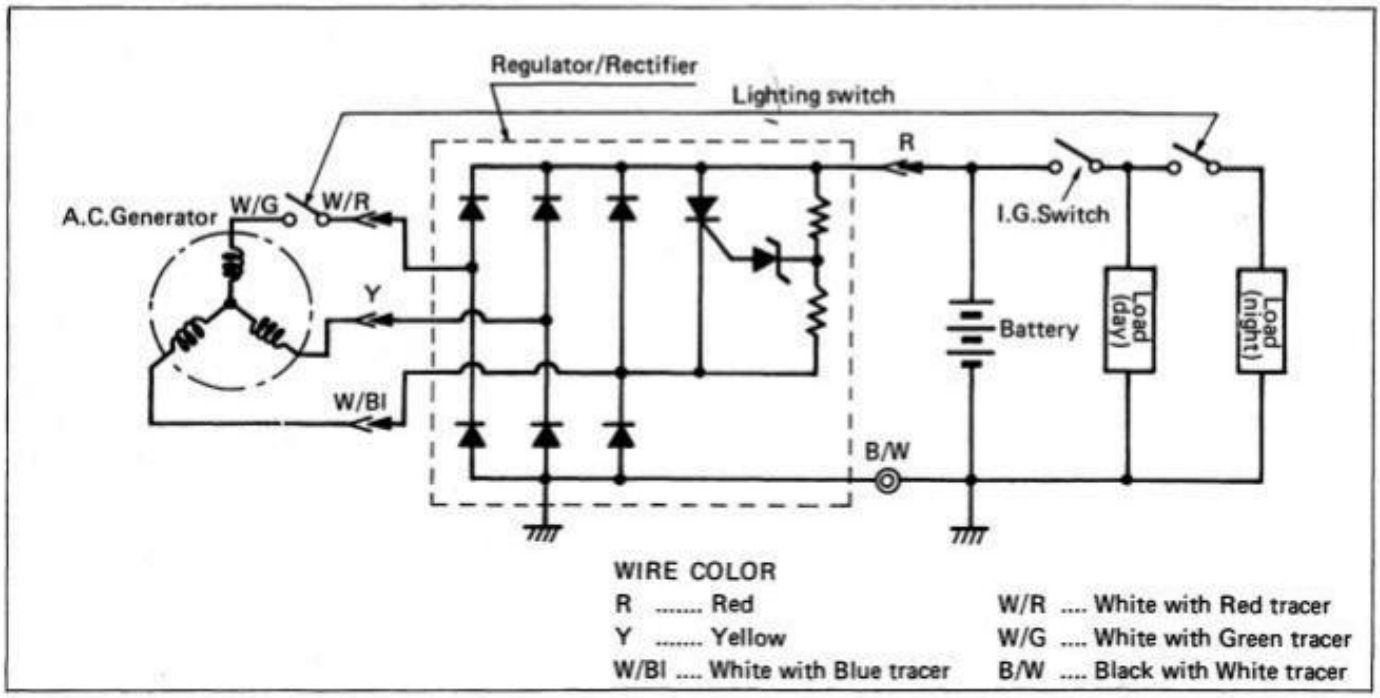

GS550L

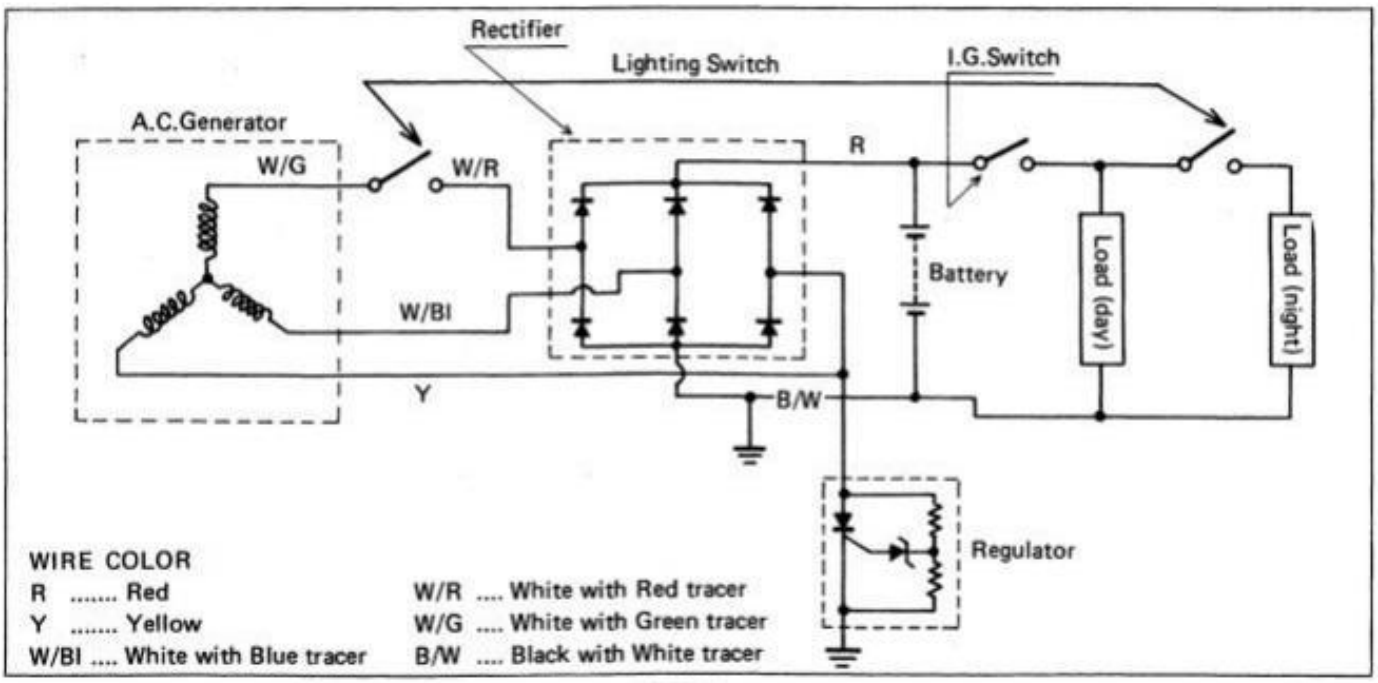

GS550E

INSPECTION AND SERVICING

Due to modifications of the charging circuit, the procedure for inspection of the A.C. generator, regulator and rectifier has been changed as described below.
As the GS550L has an integrated type regulator/rectifier, both regulator and rectifier can be inspected at the same time.

A.C. Generator test:

- Disconnect lead wires, Y, W/G and W/Bl from the A.C. generator.
- Start the engine and keep it running at 5 000 r/min.
- Using the pocket tester (range: A.C. 250V) measure the A.C. voltage between Y – W/G, W/G – W/Bl, and Y – W/Bl.

Engine Speed	A.C. Line Voltage	Electrical condition of A.C. generator
5 000 r/min	70V or over	A.C. generator is satisfactory
	70V under	A.C. generator is faulty

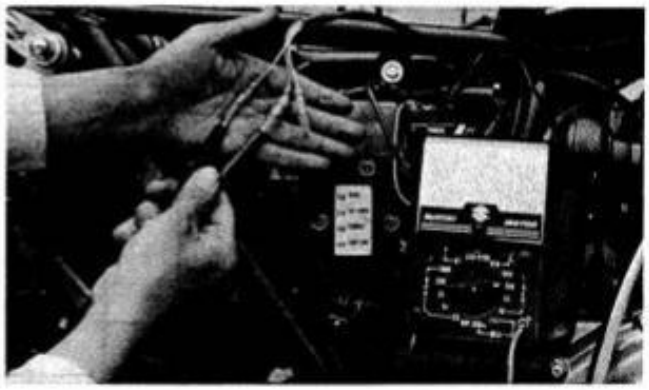

CAUTION: Voltage measurement should be done as quickly as possible to prevent engine overheat.

09900-25002	Pocket Tester

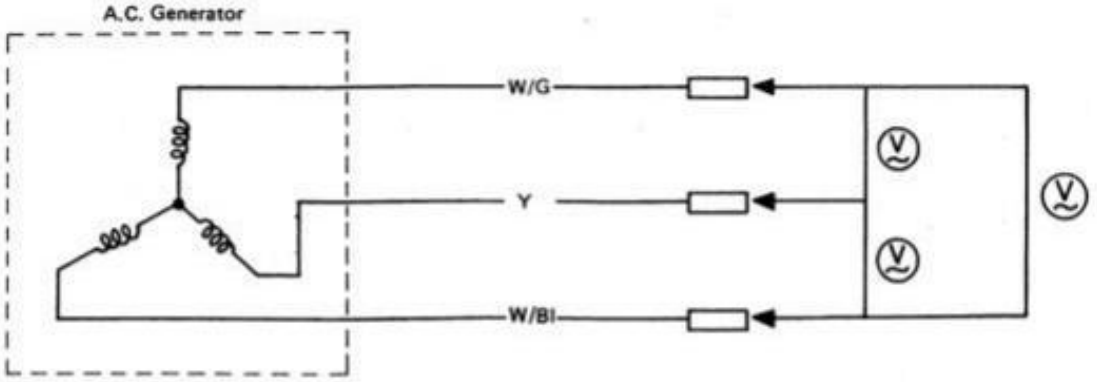

WIRE COLOR
Y ..... Yellow
W/Bl .... White with Blue tracer
W/G .... White with Green tracer

Stator test:

- Using the Pocket Tester, check continuity between the lead wires, Y, W/G and W/Bl. Also check that the stator core is insulted.
- If there is no continuity between the lead wires, or if there is continuity between the lead wires and stator core, replace the stator with a new one.

Rotor test:

- If the stator is in good condition but the A.C. generator is faulty, replace the rotor with a new one.

CAUTION: Do not give any shock to the rotor to prevent reducing magnetic force.

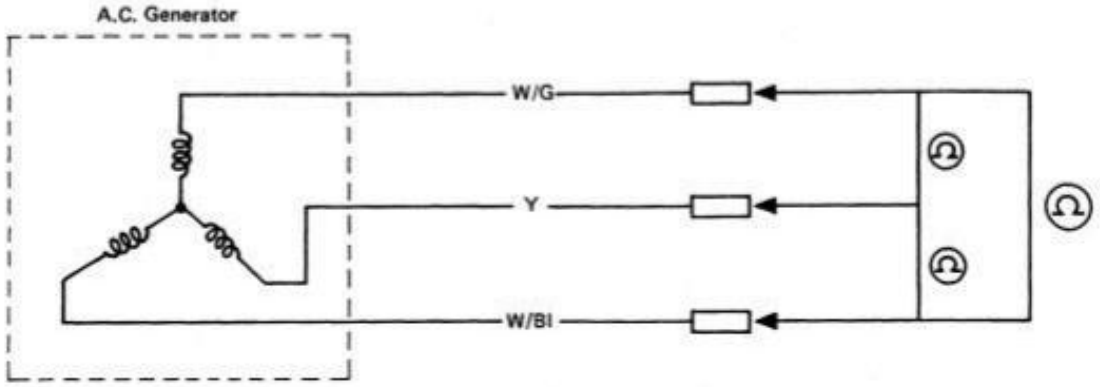

WIRE COLOR
Y ..... Yellow
W/Bl .... White with Blue tracer
W/G .... White with Green tracer

Tester Range: Ω x 1

Regulator/Rectifier test:

- Start the engine and keep it running at 5 000 r/min with the lighting switch turned OFF.
- Contact the (+) lead probe of the Pocket Tester to the (+) terminal of the battery, and connect the (–) lead probe to the (–) terminal, then measure the D.C. voltage.
- If the A.C. generator is in good condition but the regulator/rectifier is faulty, replace the latter with a new one.

09900-25002	Pocket Tester

Engine speed	D.C. line voltage	Electrical condition of Regulator/Rectifier
5 000 r/min	14V – 15.5V	Regulator/Rectifier is satisfactory
	14V under, or 15.5V or over	Regulator/Rectifier is faulty

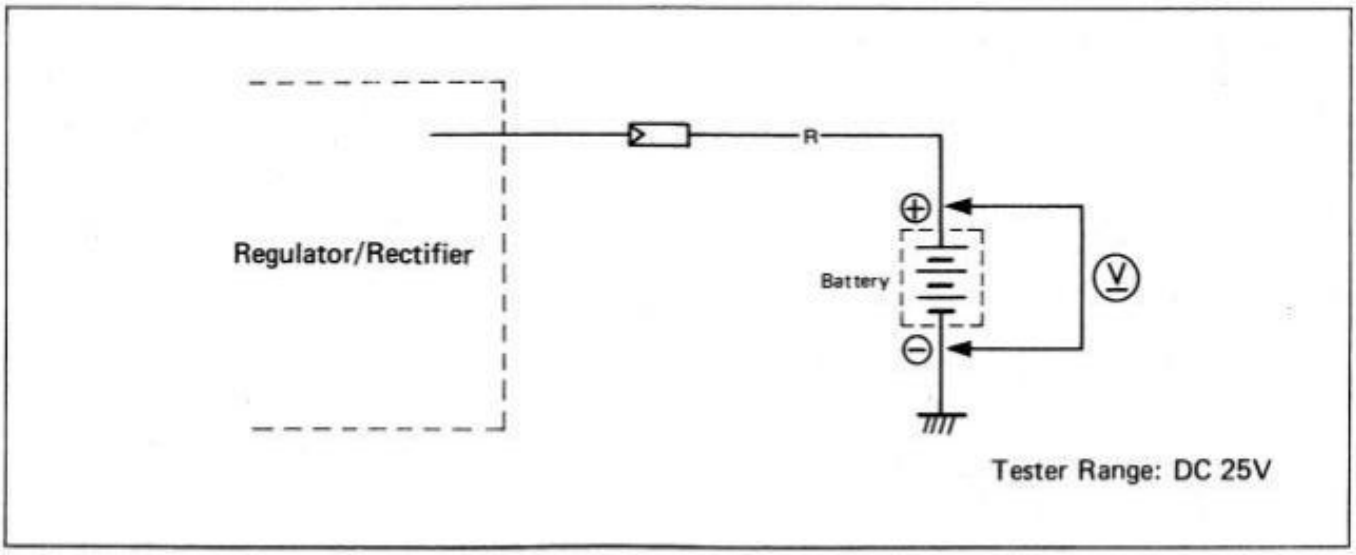

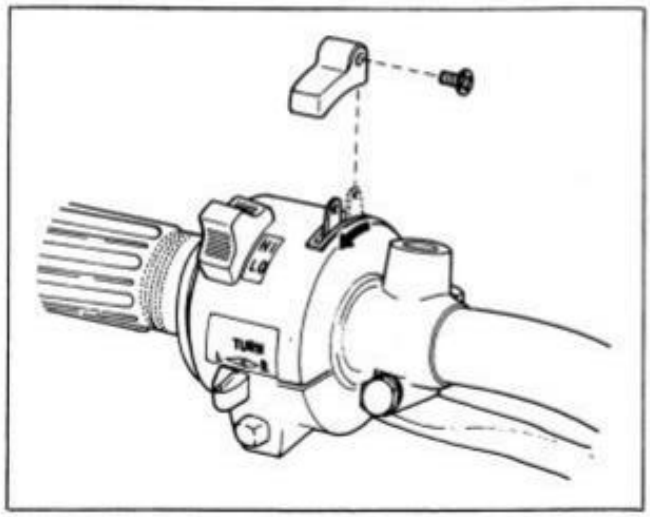

NOTE: When making this test, be sure the battery is in a fully-charged condition.
The switch knob must be removed to place the lighting switch in the OFF position.

– Check resistance between the lead wires using the Pocket Tester.
If the resistance measured is incorrect, replace the regulator/rectifier.
To make this check-up, refer to the charts below:

Tester Range: Ω x 1000

(–) \ (+)	W/R	Y	W/BI	R	B/W
W/R		OFF	ON	ON	OFF
Y	OFF		ON	ON	OFF
W/BI	OFF	OFF		ON	OFF
R	OFF	OFF	ON		OFF
B/W	ON	ON	ON	ON	

R ..... Red
Y ..... Yellow
B/W .... Black with White tracer
W/BI .... White with Blue tracer
W/R .... White with Red tracer

COMBINATION METER

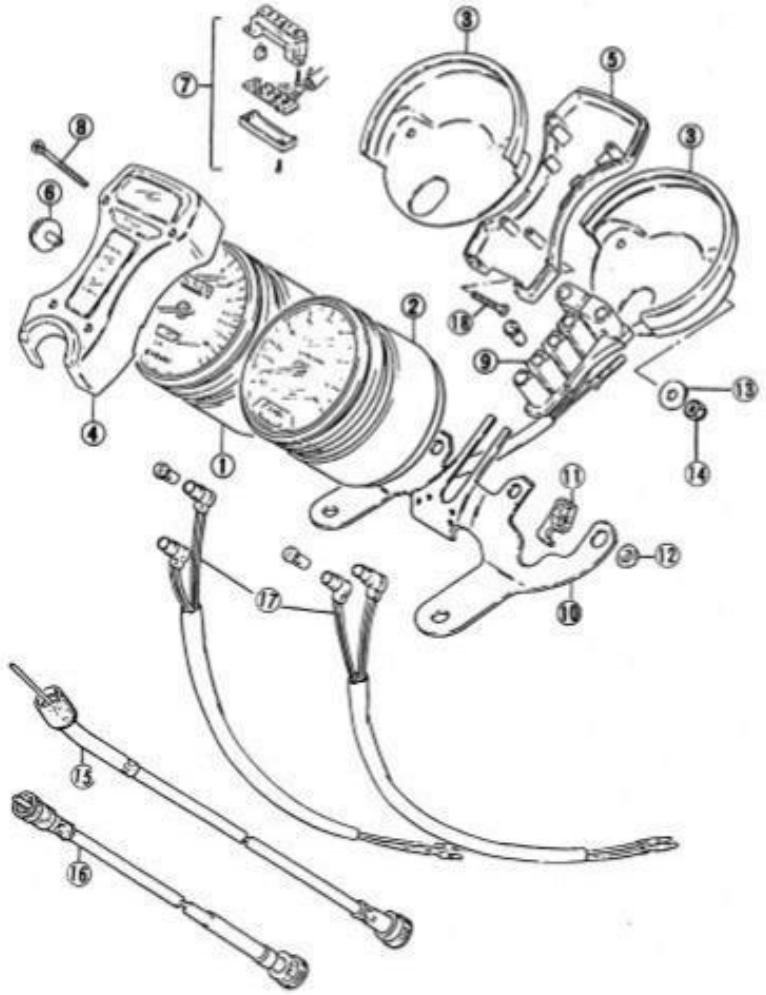

① Speedometer
② Tachometer
③ Under cover
④ Indicator light upper case
⑤ Under cover
⑥ Knob
⑦ Gear position indicator light ass'y
⑧ Securing screw
⑨ Indicator bulb socket
⑩ Meter bracket
⑪ Meter cushion
⑫ Meter cushion
⑬ Washer
⑭ Cap nut
⑮ Speedometer cable
⑯ Tachometer cable
⑰ Meter bulb socket
⑱ Securing screw

INDICATOR LIGHT BULB REPLACEMENT

- Remove the four indicator light upper case securing screws and take off the upper case.
- After installing a new bulb, check for continuity. If the bulb does not light, inspect the wiring for open or short circuits.

METER DISASSEMBLY

- Disconnect the speedometer cable and tachometer cable.
- Loosen the four under-cover cap nuts. Pull out the speedometer and tachometer.

NOTE: When removing the under-cover, speedometer and tachometer, be careful so that the meter cushions, washers and cap nuts are not lost.

FUEL GAUGE

WIRING

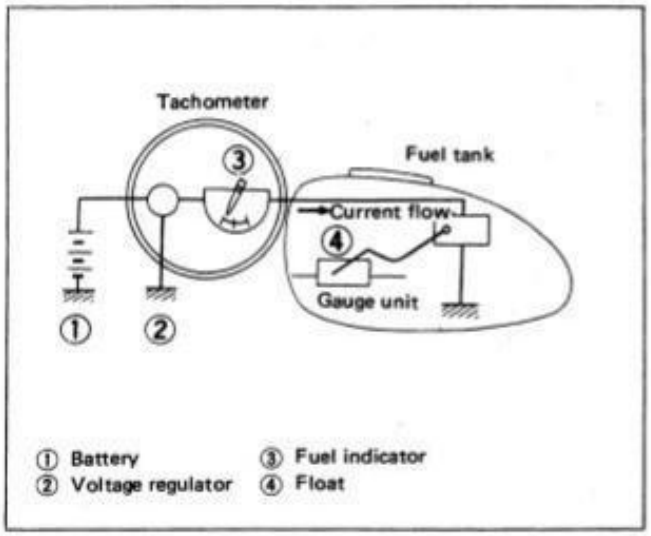

1. The above drawing is a schematic of fuel gauge wiring. The internal resistance value of the gauge unit is adapted to vary with the height of the float. It is difficult for current to pass through the circuit when the resistance value is high, and consequently the swing of the meter is small (close to point E).
   The more current passes through the circuit, increasing the swing of the pointer (close to point F), when the resistance value is low.
2. The relationships between the amount of gasoline and meter indications are as follows:

Amount of gasoline (L)	Meter indication
1.5	Point E −2°30′
1.9	E
3.6	Red zone max. limit
4.8	1/2
8.2	F
9.1	Point F + 5°

The meter points to E −2°30′ when the amount of gasoline is between 0 to 1.5 liters. Also the meter points to F +5° when the amount of gasoline in the tank is between 9.1 liters and full.

3. Construction of each portion and operating meter.

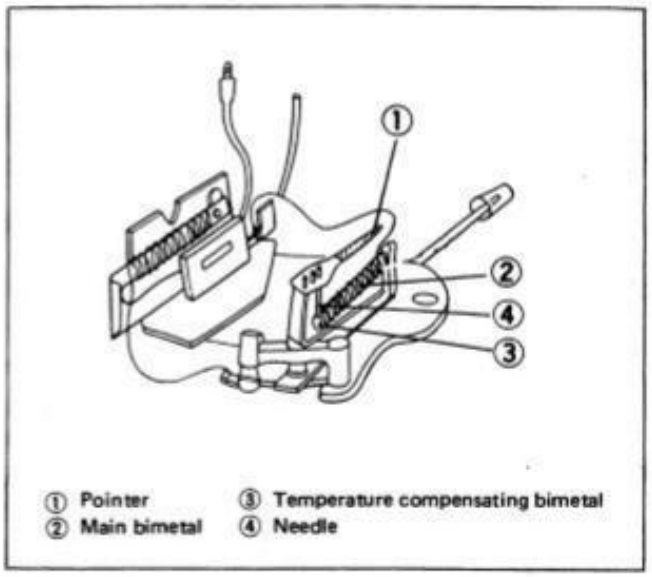

- Main operation
  Current passing through the heater wire deflects the main bimetal causing the pointer to move.
- Auxiliary operation
  This compensates for variations in temperature and voltage. A temperature compensating bimetal is provided so that no indication errors occur due to temperature changes inside the meter:

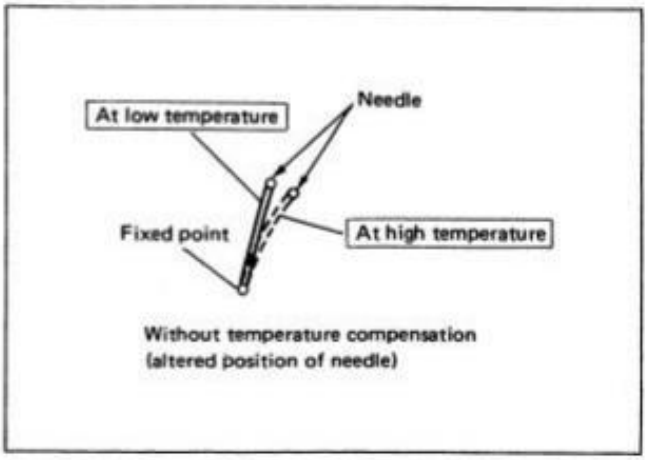

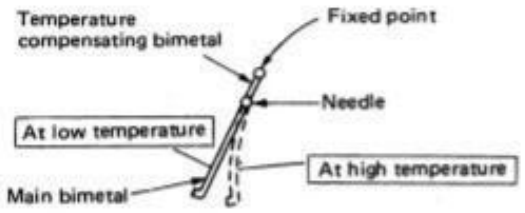

With temperature compensation (constant position of needle)

Even if the temperature rises inside the meter and causes the main bimetal to deflect as shown in the above drawing, the temperature compensating bimetal will deflect to the same degree as the main bimetal, in the reverse direction, to keep the needle position constant.

- Voltage regulator

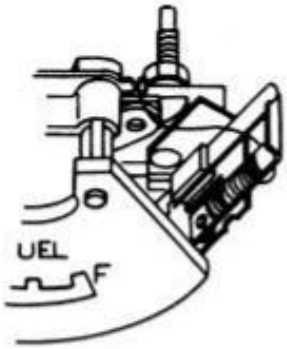

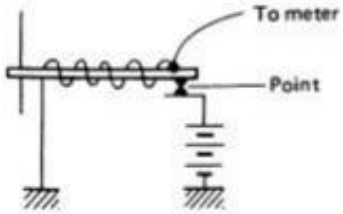

The passage of current through the heater wire deflects the bimetal and causes point separation. This point separation stops the current until the bimetal begins to cool which causing the point to connect again.

A large amount of current passes through the heater wire when the supply voltage is high, causing the bimetal to deflect quickly, and the points to separate. This is illustrated in the following drawing which shows that the average current is constant.

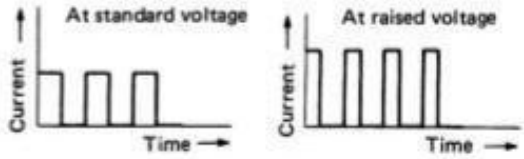

Average output voltage: 7V

- Gauge unit
  The displacement of the float changes the position of the contact plate which slides on a wire wound resistor causing the resistance value to vary.

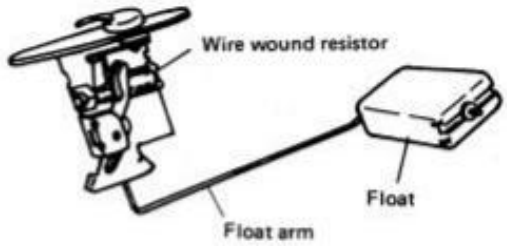

INSPECTION OF FUEL METER AND GAUGE

The fuel meter is enclosed within the tachometer assembly.
The following table is used for troubleshooting.

Amount of gasoline (L)	1.5	1.9	3.6	4.8	8.2	9.1
Resistance (Ω)	110	95	50	32.5	7	3

Pointer failure and minus indication
(1) Meter pointer fails to move.
(2) Meter has a substantial minus indication when key is turned on.

Checking method

(1) Determine whether trouble is within meter or gauge.
Remove gauge connector to short-circuit meter side of same connector (make gauge resistance equal to zero Ω), and observe meter indication.

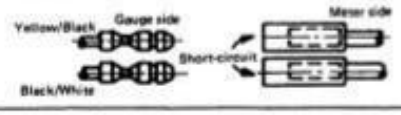

- Meter pointer fails to move → Meter side defective → Check (2)
- Meter pointer swings to extreme position → Gauge defective → Check (3)

(2) Meter check.
Ground meter terminal of meter side connector directly to frame and observe meter indication.

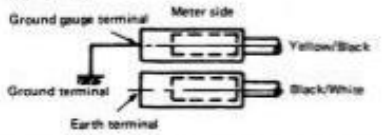

- Meter pointer fails to move → Meter side defective → Check (5)
- Meter pointer swings to extreme position → Wiring harness defective → Check (4)
  (Contact of connector terminal)

(3) Gauge check.
Measure resistance value between two terminals of gauge side connector.
(Full = 1 ~ 5 Ω : Empty = 103 ~ 117 Ω)

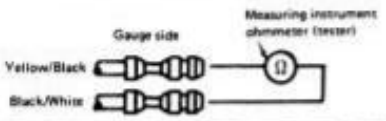

- Large, unstable resistance (More than 117 Ω) → Gauge defective → Replace gauge
- Normal resistance value (1 – 117 Ω) → Wiring harness defective → Check (4)
  (Contact of connector terminal)

(4) Connector contact check (wiring harness side).
Strengthen spring pressure against terminal at wiring harness side connector (to improve contact) and observe meter indication.
(by normal wiring)

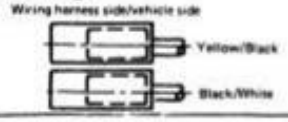

- Normal indication of meter

(5) Connector contact check (wiring harness side).
Strengthen spring pressure against terminal of 3-pole connector at wiring harness side (to improve contact) and observe meter indication.

Carry out check (2) at the same time.

- Meter pointer swings to extreme position → Connector contact defective
- Meter pointer fails to move → Meter defective → Change meter

Meter pointer swings to extreme position and indicates plus.
(1) Swinging-up of pointer.
(2) Substantially plus indication of meter.

Method of checking

(6) Meter side check.
Remove gauge connector (without connecting gauge) and observe meter indication.

- With meter indication (operates) → Meter defective → Change meter
- With no meter indication → Check (7)

(7) Gauge side check.
Measure resistance value of gauge according to (3).

- Small resistance, 0 Ω → Defective unit → Change meter
  (Full → less than 0.5 Ω)
  (Empty → less than 102 Ω)
- Normal resistance value → Check (8)

(8) Meter side check (operate voltage regulator).
Check meter voltage between gauge terminal (yellow/black lead wire) of meter or gauge terminal (as it is connected) of connector for gauge and ground.

- Indicates interrupted voltage → Meter defective → Change meter
  (Even when meter is normal, interrupted voltage can be obtained. However, here, the meter is defective because the pointer swings to extreme position.)
- Indicates constant voltage → Check (9)

(9) Meter side check.
Remove 3-pole meter side connector and measure resistance value between positive terminal and ground terminal.

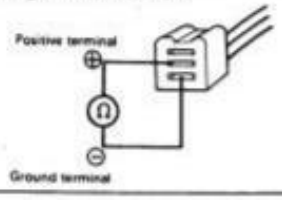

- Large resistance infinite → Meter defective → Change meter
- Resistance value (55 – 85 Ω) → Wiring harness defective → Check (10)

(10) Ground connector check.
Check grounding condition of ground terminal of 3-pole meter side connector at vehicle side. Measure resistance value between ground terminal shown in drawing (5) and frame grounding.

- Large resistance, no conductance → Ground wire harness defective → Check (11)
- Resistance 0 Ω → Defective contact of meter side connector → Check (11)

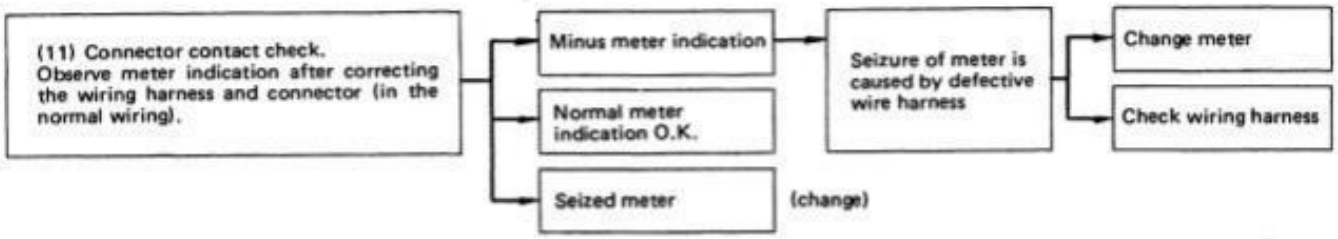

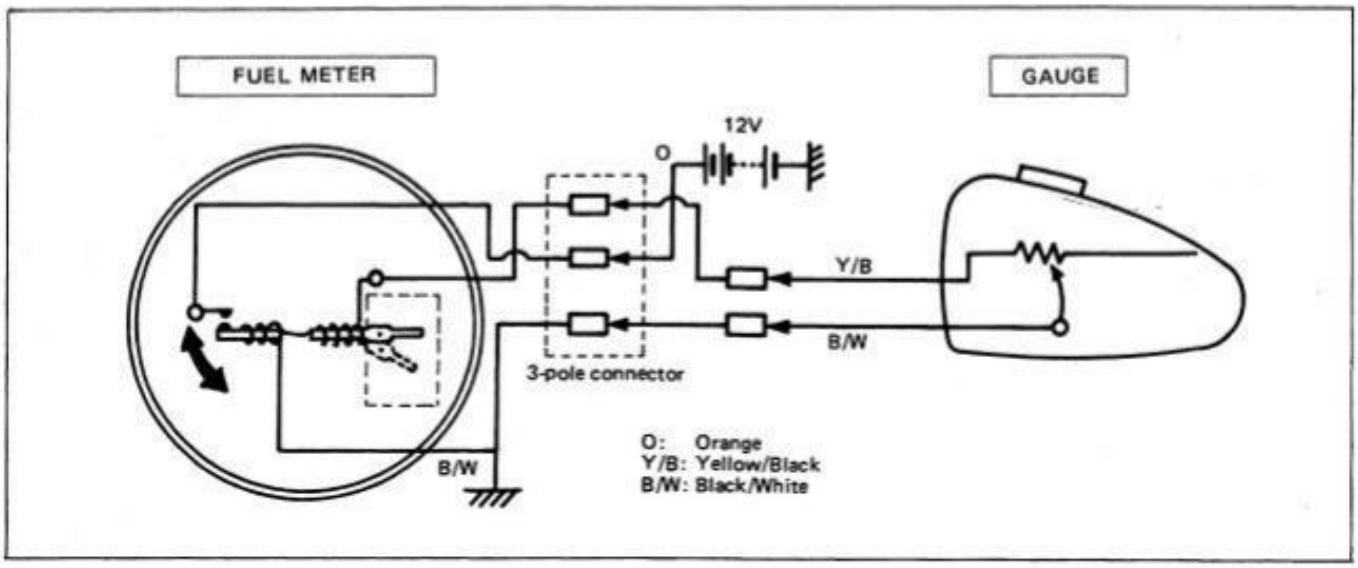

Check of resistance value between terminals
Meter side

Orange — Yellow/Black 45 – 65 Ω
Orange — Black/White 55 – 85 Ω

Gauge side

Full 1 – 5 Ω
Empty 103 – 117 Ω

WIRE AND CABLE ROUTING

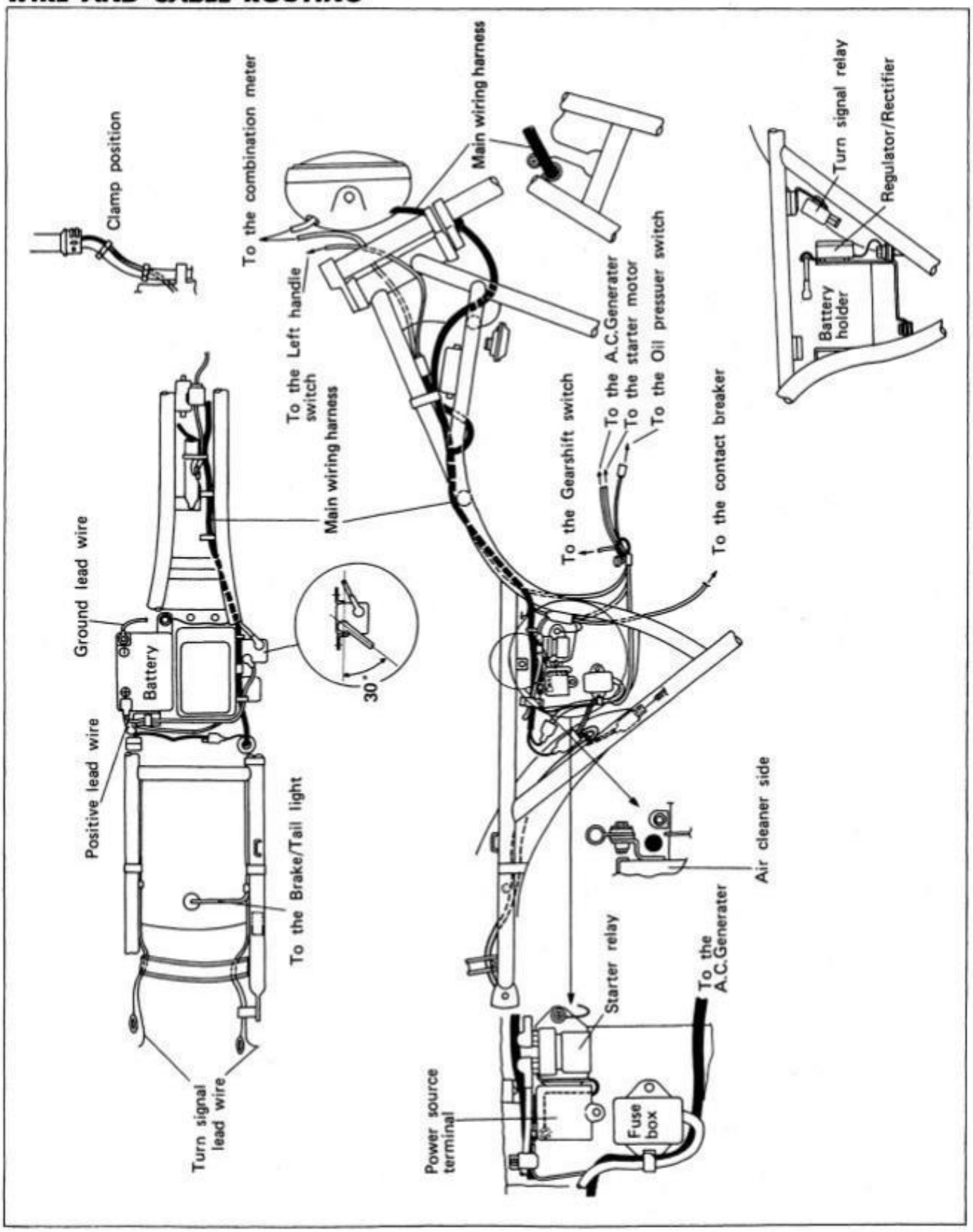

How to set the high-tension cord.

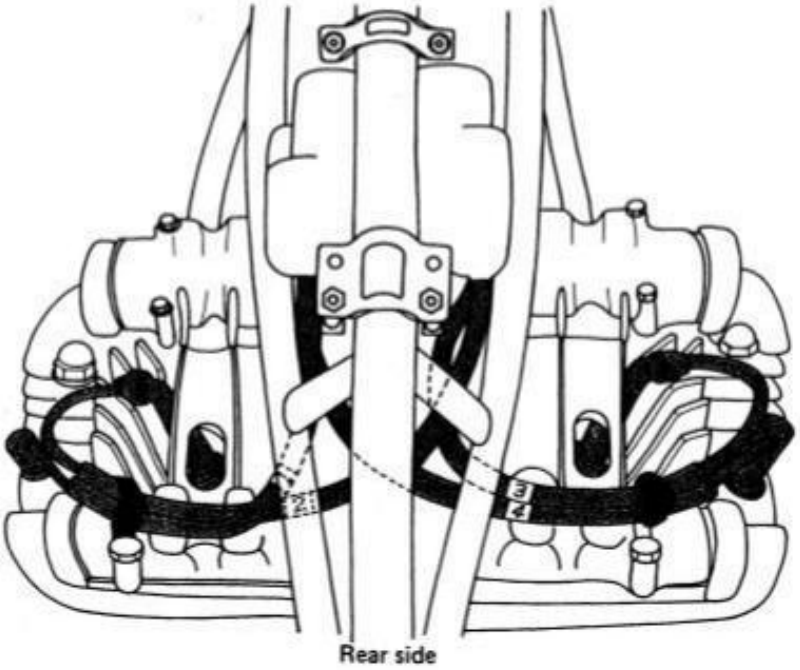

CABLE ROUTING

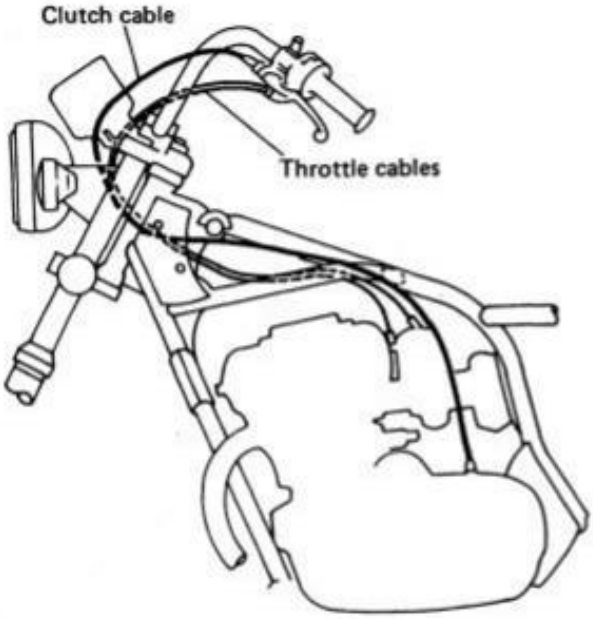

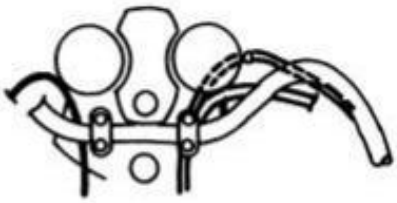

WIRING DIAGRAM

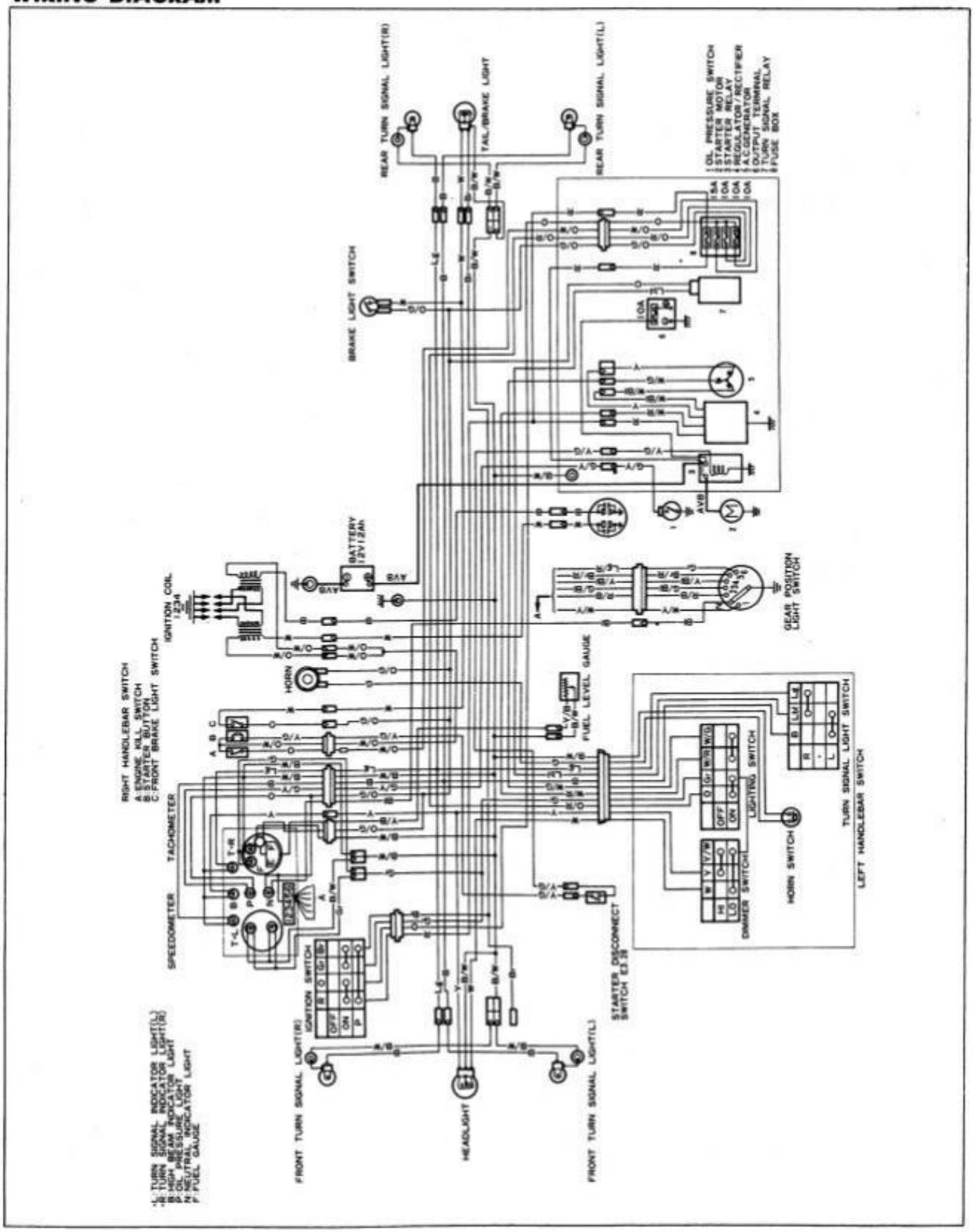

GS550L(E-28)

GROUP 14

This section provides new technical informations for GS550L, under E-28 specification, which differ from those of the GS550 and GS550E.

CONTENTS

GENERAL INFORMATION
- SPECIFICATIONS 207
- SERVICE DATA 209

CHASSIS
- FRONT FORK 215
- REAR SHOCK ABSORBER 216

WHEELS
- FRONT WHEEL 217
- TIRE AND TUBE REMOVAL 218

ELECTRICAL
- CHARGING SYSTEM 220
- INSPECTION AND SERVICING 221
- COMBINATION METER 225
- FUEL GAUGE 226

WIRE AND CABLE ROUTING 231

WIRING DIAGRAM 233

VIEW OF GS550L

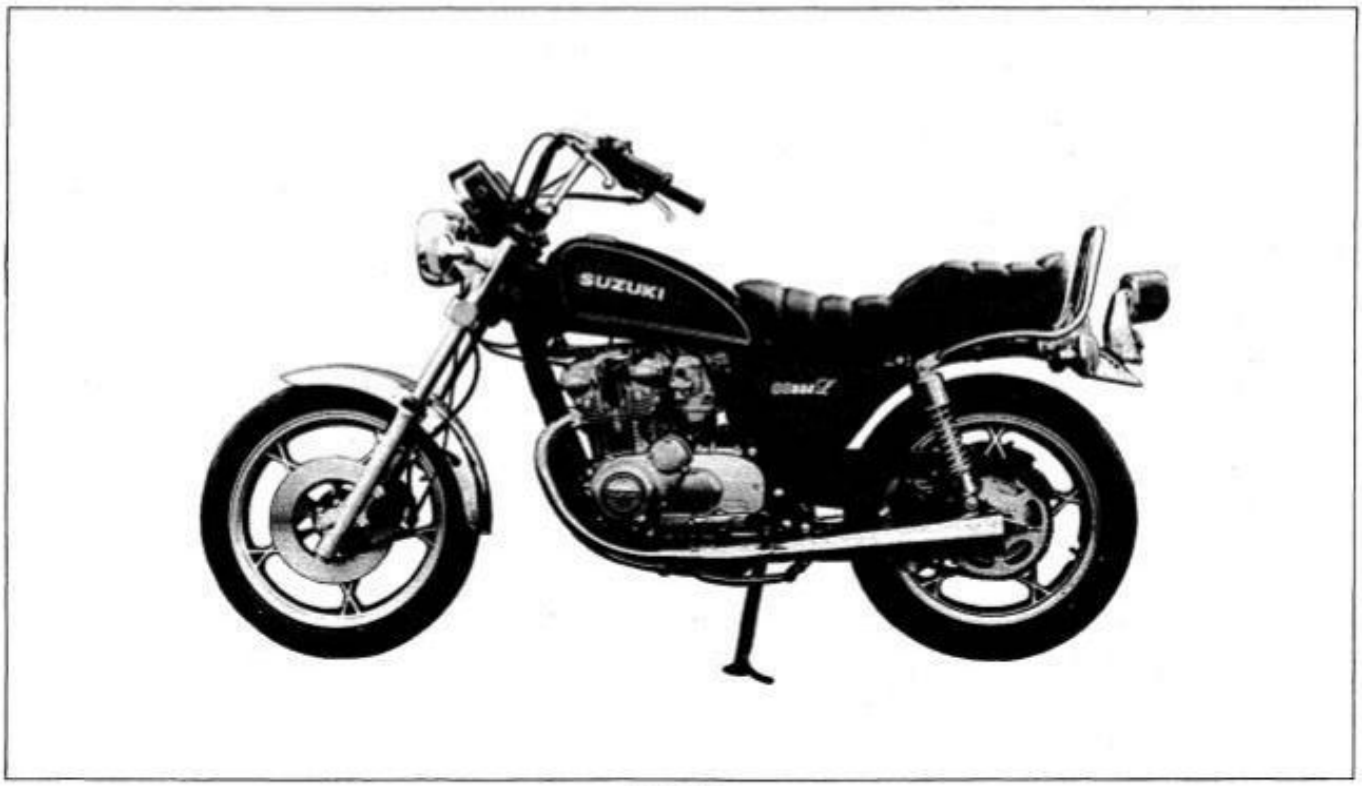

Left Side

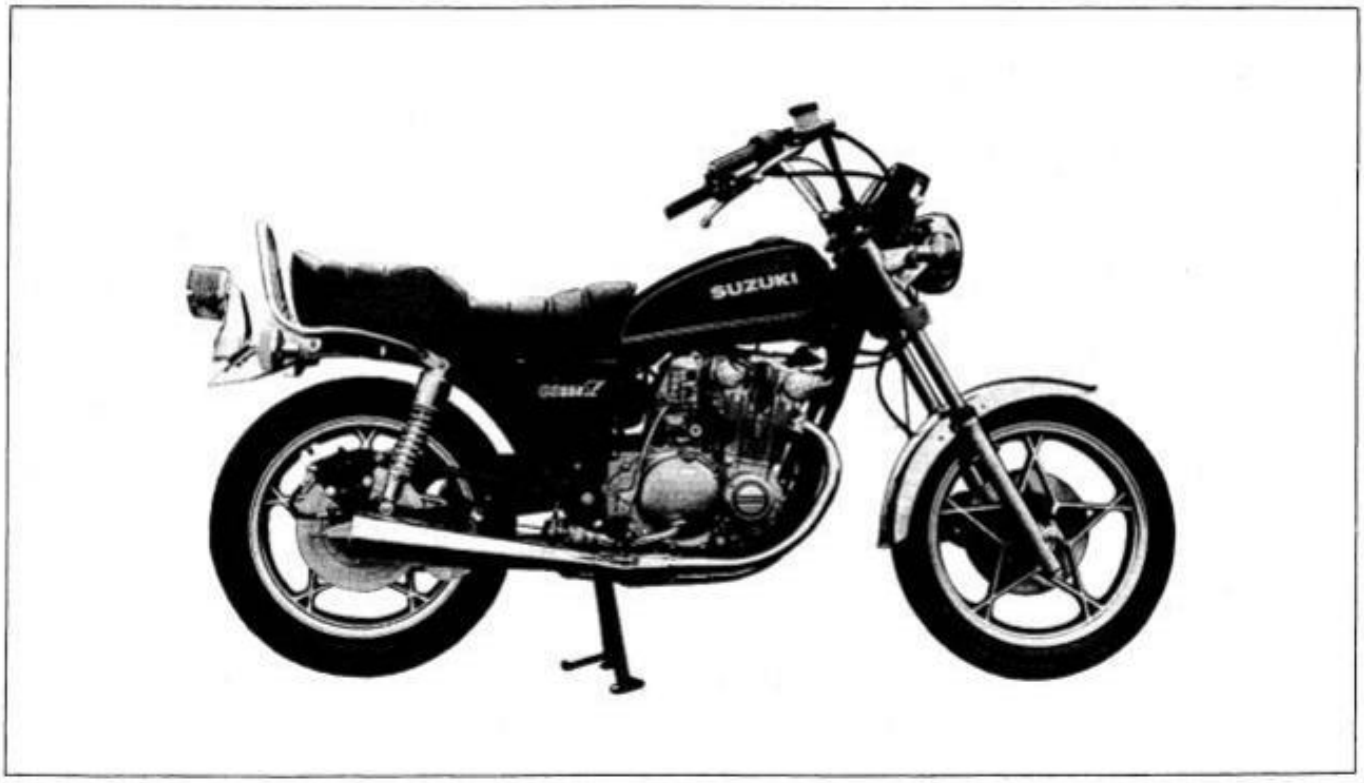

Right Side

SPECIFICATIONS

DIMENSIONS AND WEIGHT

Overall length	2 190 mm (86.2 in)
Overall width	890 mm (35.0 in)
Overall height	1 215 mm (47.8 in)
Wheelbase	1 480 mm (58.3 in)
Ground clearance	165 mm (6.5 in)
Dry weight	206 kg (454 lbs)

ENGINE

Type	Four-stroke cycle, air-cooled, DOHC
Number of cylinders	4
Bore	56.0 mm (2.205 in)
Stroke	55.8 mm (2.197 in)
Piston displacement	549 ml (33.5 cu.in)
Compression ratio	8.6 : 1
Carburetor	MIKUNI VM22SS, four
Air cleaner	Polyurethane foam element
Starter system	Electric and kick
Lubrication system	Wet sump

TRANSMISSION

Clutch	Wet multi-plate type
Transmission	6-speed constant mesh
Gearshift pattern	1-down 5-up
Primary reduction	1.977 (87/44)
Final reduction	3.333 (50/15)
Gear ratios, Low	2.666 (32/12)
2nd	1.777 (32/18)
3rd	1.380 (29/21)
4th	1.173 (27/23)
5th	1.045 (23/22)
Top	0.956 (22/23)
Drive chain	DAIDO D.I.D. 50HDL or TAKASAGO RK50SHO,110 links

CHASSIS

Front suspension	Telescopic, oil dampened
Rear suspension	Swinging arm, oil dampened, spring 5-way adjustable
Steering angle	40° (Right and Left)
Caster	62°00′
Trail	118 mm (4.6 in)
Turning radius	2.6 m (8.5 ft)
Front brake	Disc brake
Rear brake	Disc brake
Front tire size	3.25H19-4PR
Rear tire size	3.75H18-4PR

ELECTRICAL

Ignition type	Battery ignition
Ignition timing	17° B.T.D.C. below 1 500 r/min and 37° B.T.D.C. above 2 500 r/min
Spark plug	NGK B8ES or NIPPON DENSO W24ES
Battery	12V 12Ah/10HR
Generator	Three-phase A.C. generator
Fuse	15/10/10/10A
Headlight	12V 60/55W
Tail/Brake light	12V 8/23W (3/32 cp)
Turn signal light	12V 23W (32 cp)
Speedometer light	12V 3.4W
Tachometer light	12V 3.4W
Neutral indicator light	12V 3.4W
High beam indicator light	12V 3.4W
Turn signal indicator light	12V 3.4W
Oil pressure light	12V 3.4W

CAPACITIES

Fuel tank including reserve	13 L (3.4 US gal)
reserve	3.0 L (3.2 US qt)
Engine oil	2.4 L (2.5 US qt)
Front fork oil	217 ml (7.33 US oz) in each leg

SERVICE DATA

Valve + Guide

mm (in)

ITEM		STANDARD	LIMIT
Valve lift	IN	7.2 (0.28)	–
	EX	7.0 (0.27)	–
Tappet clearance or valve clearance (cold engine)	IN	0.03 – 0.08 (0.001 – 0.003)	
	EX	0.03 – 0.08 (0.001 – 0.003)	
Valve guide – Valve stem clearance	IN	0.025 – 0.055 (0.0009 – 0.0022)	0.35 (0.014)
	EX	0.040 – 0.070 (0.0016 – 0.0028)	0.35 (0.014)
Valve guide I.D.	IN & EX	7.000 – 7.015 (0.2756 – 0.2762)	–
Valve stem O.D.	IN	6.960 – 6.975 (0.2740 – 0.2746)	–
	EX	6.945 – 6.960 (0.2734 – 0.2740)	–
Valve stem deflection	IN & EX	–	0.05 (0.002)
Valve head thickness	IN & EX	–	0.5 (0.02)
Valve seat width	IN & EX	1.0 – 1.2 (0.04 – 0.05)	
Valve head radial runout	IN & EX	–	0.03 (0.001)
Valve spring free length	INN	35.3 – 37.0 (1.39 – 1.46)	33.9 (1.33)
	OUT	43.0 – 43.25 (1.69 – 1.70)	41.3 (1.63)
Valve spring tension	INN	29.3 – 34.0 kg/23 (64.59 – 74.96 lbs)/(0.91)	–
	OUT	50.4 – 58.3 kg/27 (111.11 – 128.53 lbs)/(1.06)	–

Camshaft

mm (in)

ITEM		STANDARD	LIMIT
Cam height	IN	35.485 – 35.515 (1.3970 – 1.3982)	35.190 (1.3854)
	EX	35.285 – 35.315 (1.3892 – 1.3904)	34.990 (1.3776)
Camshaft – Journal clearance	IN & EX	0.020 – 0.054 (0.0008 – 0.0021)	0.150 (0.0059)
Camshaft journal holder I.D.	IN & EX	22.000 – 22.013 (0.8661 – 0.8667)	–
Camshaft journal O.D.	IN & EX	21.959 – 21.980 (0.8645 – 0.8654)	–
Camshaft deflection	IN & EX	–	0.10 (0.004)
Cam chain 20 pitch length		–	157.80 (6.213)

Piston + Ring + Cylinder

mm (in)

ITEM		STANDARD	LIMIT
Compression pressure		9 – 12 kg/cm² (128 – 171 psi)	6.5 kg/cm² (92.4 psi)
Difference between cylinders		–	2 kg/cm² (28.5 psi)
Piston – Cylinder clearance		0.050 – 0.060 (0.0020 – 0.0024)	0.120 (0.0047)
Cylinder bore		56.000 – 56.015 (2.2047 – 2.2053)	56.080 (2.2079)
Piston dia./Measurement point		55.945 – 55.960/15 (2.2026 – 2.2031)/(0.59)	55.880 (2.2000)
Cylinder distortion		–	0.2 (0.008)
Cylinder head distortion		–	0.2 (0.008)
Piston ring free end gap	1st	Approx. 6.5 (0.26)	5.2 (0.20)
	2nd	Approx. 6.5 (0.26)	5.2 (0.20)
Piston ring end gap	1st	0.1 – 0.3 (0.004 – 0.012)	0.7 (0.03)
	2nd	0.1 – 0.3 (0.004 – 0.012)	0.7 (0.03)
Piston ring – Groove clearance	1st	0.020 – 0.055 (0.0008 – 0.0022)	0.180 (0.0071)
	2nd	0.020 – 0.060 (0.0008 – 0.0024)	0.150 (0.0059)
Piston ring groove width	1st	1.21 – 1.23 (0.047 – 0.048)	–
	2nd	1.21 – 1.23 (0.047 – 0.048)	–
	Oil	2.51 – 2.53 (0.099 – 0.100)	–
Piston ring thickness	1st	1.175 – 1.190 (0.0463 – 0.0469)	–
	2nd	1.170 – 1.190 (0.0461 – 0.0469)	–
Piston pin – Pin bore clearance		0.002 – 0.013 (0.0001 – 0.0005)	0.120 (0.0047)
Piston pin bore I.D.		16.002 – 16.008 (0.6300 – 0.6302)	–
Piston pin O.D.		15.995 – 16.000 (0.6297 – 0.6300)	–

Crankshaft

mm (in)

ITEM	STANDARD	LIMIT
Con-rod small end bore – Piston pin clearance	0.006 – 0.019 (0.0002 – 0.0007)	0.080 (0.0031)
Con-rod small end bore I.D.	16.006 – 16.014 (0.6302 – 0.6305)	–
Piston pin O.D.	15.995 – 16.000 (0.6297 – 0.6300)	–
Big end side clearance	0.10 – 0.65 (0.004 – 0.026)	1.00 (0.039)
Con-rod big end wear	–	0.08 (0.003)
Crankshaft runout	–	0.05 (0.002)

Oil Pump

mm (in)

ITEM	STANDARD	LIMIT
Oil pump reduction ratio	1.821 (87/44 x 35/38)	
Oil pressure (for 60°C)	Above 0.1 kg/cm² (1.42 psi), Below 0.5 kg/cm² (7.11 psi) at 3 000 r/min	
Tip clearance	–	0.20 (0.008)
Outer rotor clearance	–	0.25 (0.010)
Side clearance	–	0.15 (0.006)

Clutch

mm (in)

ITEM	STANDARD	LIMIT
Drive plate thickness	2.9 – 3.1 (0.11 – 0.12)	2.6 (0.10)
Drive plate distortion	–	0.2 (0.008)
Driven plate thickness	1.6 (0.06)	–
Driven plate distortion	–	0.1 (0.004)
Drive plate claw width	11.8 – 12.0 (0.46 – 0.47)	11.0 (0.43)
Clutch spring free length	38.4 (1.51)	35.9 (1.41)
Pri. drive – Driven gear backlash	0 – 0.03 (0 – 0.001)	0.08 (0.003)

Transmission

mm (in)

ITEM		STANDARD	LIMIT
Primary reduction		1.977 (87/44)	
Final reduction		3.333 (50/15)	
Gear ratios,	Low	2.666 (32/12)	
	2nd	1.777 (32/18)	
	3rd	1.380 (29/21)	
	4th	1.173 (27/23)	
	5th	1.045 (23/22)	
	Top	0.956 (22/23)	
Gear backlash	1st, 2nd, 3rd and 4th	0 – 0.04 (0 – 0.002)	0.09 (0.004)
	5th and Top	0.05 – 0.10 (0.002 – 0.004)	0.15 (0.006)
Shift fork – Groove clearance		0.1 – 0.3 (0.004 – 0.012)	0.5 (0.020)
Shift fork groove width		5.5 – 5.6 (0.217 – 0.220)	–
Shift fork thickness		5.3 – 5.4 (0.209 – 0.213)	–
Drive chain size		DAIDO 50HDL or TAKASAGO RK50SHO, 110 links	
20 pitch length		317.1 – 317.7 (12.48 – 12.51)	320.0 (12.60)

Carburetor

mm (in)

ITEM	SPECIFICATION
Idle r/min	1,000 – 1,200 r/min
Carburetor type	MIKUNI VM22SS
I.D. No.	47120
Bore size	22 (0.87)
Float height	24.0 ± 1.0 (0.95 ± 0.04)
Fuel level	4.0 ± 1.0 (0.16 ± 0.04)
Air screw	2.0 turns back
Cut away	1.5
Jet needle	5DL35-3
Pilot screw	1.0
Pilot jet	#15
Pilot outlet	0.6
Needle jet	0 – 6
By-pass	1.0
Main jet	#80

Electrical

mm(in)

ITEM	STANDARD	LIMIT
Ignition timing	17° B.T.D.C. below 1 500 r/min and 37° B.T.D.C. above 2 500 r/min	
Firing order	1. 2. 4. 3.	
Spark plug	NGK B8ES or NIPPON DENSO W24ES	
Spark plug gap	0.6 – 0.8 (0.024 – 0.031)	
Contact point gap	0.3 – 0.4 (0.012 – 0.016)	
Dwell angle	190°	
Spark performance	Over 8 (0.3) at 1 atm	
Condensor capacity	0.25 ± 0.03μF	
Ignition coil resistance (primary)	Approx. 4Ω	
Ignition coil resistance (secondary)	Approx. 15 kΩ	
Battery capacity	12V 43.2kC (12 Ah)/10 HR	
Specific gravity	1.28 at 20°C	
Regulated voltage	14 – 15.5V at 5 000 r/min	
Fuse size	15/10/10/10A	
Generator no-load data	More than 70V (AC) at 5 000 r/min	
Starter motor brush length	12 – 13 (0.47 – 0.51) ..... MITSUBA 14 (0.55) . . . DENSO	6 (0.24) 9 (0.35)

Brake + Wheel

mm (in)

ITEM		STANDARD	LIMIT
Axle runout	Front & Rear	–	0.25 (0.010)
Brake disc thickness	Front	6.5 – 6.9 (0.26 – 0.27)	6.0 (0.24)
	Rear	6.5 – 6.9 (0.26 – 0.27)	6.0 (0.24)
Brake disc runout	Front & Rear	–	0.30 (0.012)
Master cylinder cylinder dia.	Front	14.00 (0.551)	–
	Rear	14.00 (0.551)	–
Master cylinder piston dia.	Front	13.96 (0.550)	–
	Rear	13.96 (0.550)	–
Brake caliper cylinder bore	Front	42.85 (1.687)	–
	Rear	38.18 (1.503)	–
Brake caliper piston dia.	Front	42.82 (1.686)	–
	Rear	38.15 (1.502)	–
Wheel rim runout	Radial & Axial	–	2.0 (0.08)
Tire size	Front	3.25H19 – 4PR	
	Rear	3.75H18 – 4PR	
Tire tread depth	Front	–	1.6 (0.06)
	Rear	–	2.0 (0.08)

Tire air pressure

Cold Inflation Tire Pressure	FRONT						REAR					
	Solo Riding			Dual Riding			Solo Riding			Dual Riding		
	kPa	psi	kg/cm²	kPa	psi	kg/cm²	kPa	psi	kg/cm²	kPa	psi	kg/cm²
Normal Riding	175	25	1.75	175	25	1.75	200	28	2.00	225	32	2.25
Continuous High Speed Riding	200	28	2.00	200	28	2.00	225	32	2.25	280	40	2.80

Suspension

mm(in)

ITEM		STANDARD	LIMIT
Front fork stroke		160 (6.30)	
Rear wheel travel		100 (3.9)	
Front spring free length	Lower	467.0 (18.39)	451 (17.76)
	Upper	165.8 (6.53)	153 (6.02)
Fork oil level		229 (9.02)	
Swinging arm pivot shaft runout		–	0.3 (0.012)

Capacity

mm (in)

ITEM		SPECIFICATION
Fuel tank including reserve		13 L (3.4/2.9 US/Imp gal)
	reserve	3.0 L (3.2/2.6 US/Imp qt)
Engine oil	Change	2.4 L (2.5/2.1 US/Imp qt)
	Filter change	2.6 L (2.7/2.3 US/Imp qt)
	Overhaul	2.7 L (2.8/2.4 US/Imp qt)
Front fork oil (each leg)		217 ml (7.33/7.64 US/Imp oz)
Fuel type		Unleaded or low-lead type gasoline is recommended. The gasoline should be at least 85 – 95 octane.
Engine oil type		SAE 10W/40
Front fork oil type		Mixture ratio SAE 10W/30 : SAE 5W/20 = 1 : 1

Wattage (W)

Head light	HI	60
	LO	55
Tail/Brake light		8/23
Turn signal light		23
Turn signal indicator light		3.4
Neutral indicator light		3.4
High beam indicator light		3.4
Speedometer light		3.4
Tachometer light		3.4
Oil pressure light		3.4

FRONT FORK

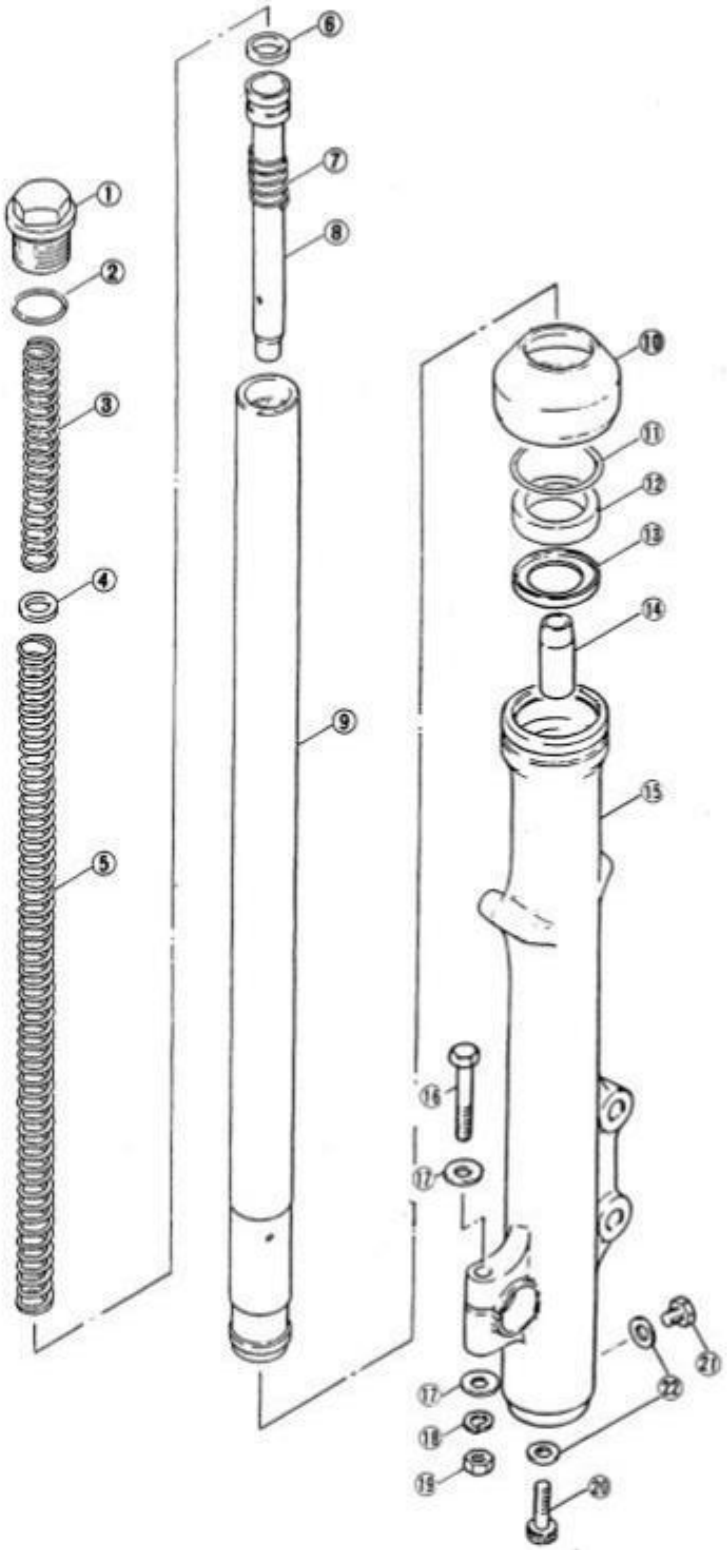

① Cap bolt
② O ring
③ Upper spring
④ Washer
⑤ Lower spring
⑥ Piston ring
⑦ Rebound spring
⑧ Damper rod
⑨ Inner tube
⑩ Dust seal
⑪ Oil seal stopper ring
⑫ Oil seal
⑬ Oil seal spacer
⑭ Oil lock piece
⑮ Outer tube
⑯ Pinch bolt
⑰ Washer
⑱ Lock washer
⑲ Nut
⑳ Allen bolt
㉑ Drain plug
㉒ Gasket

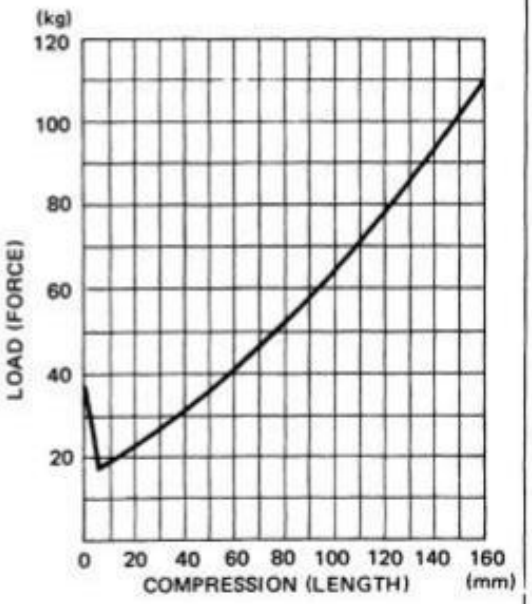

FRONT FORK SPRING CHARACTERISTICS

REAR SHOCK ABSORBER

Hydraulic dampers, each fitted with a coil spring, absorb road shocks in the rear suspension. The spring preload can be varied in five steps. The total damping stroke is 85 mm (3.35 in).

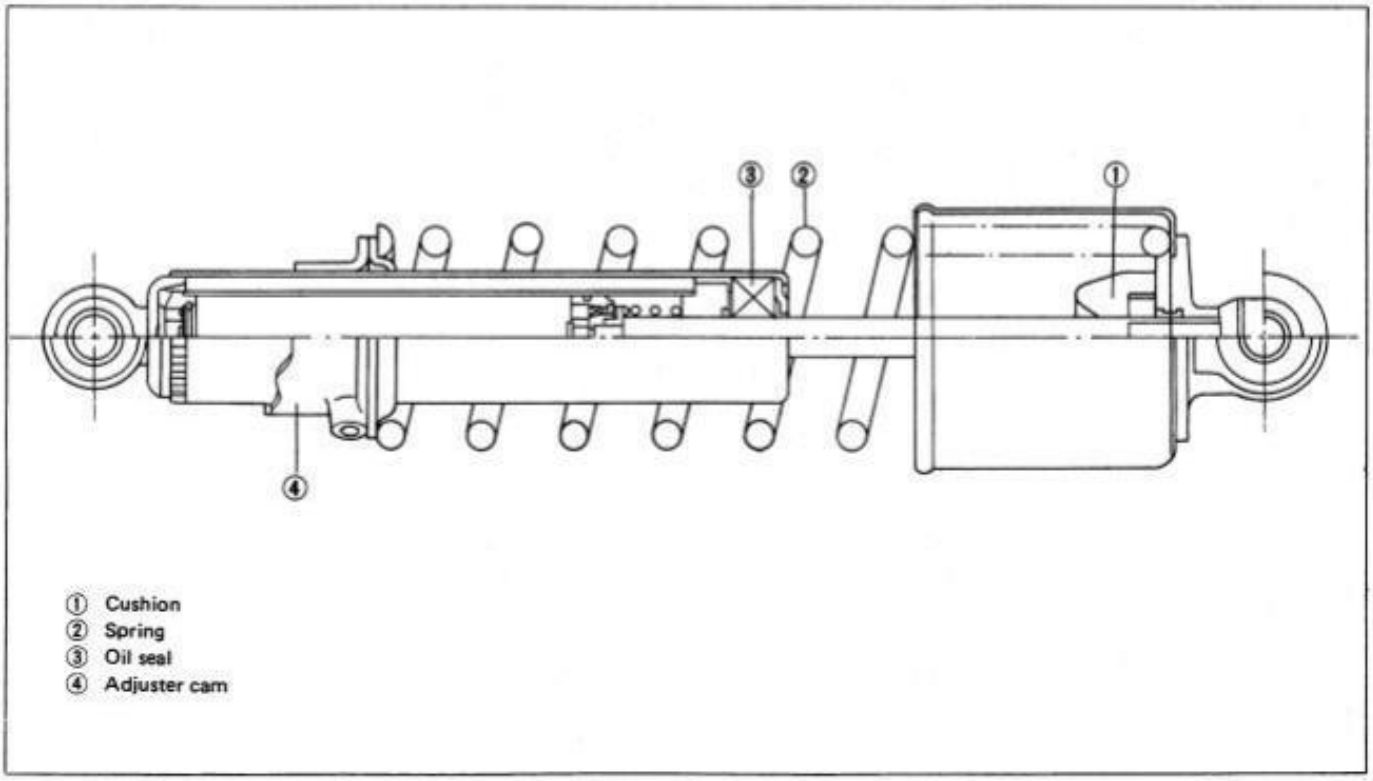

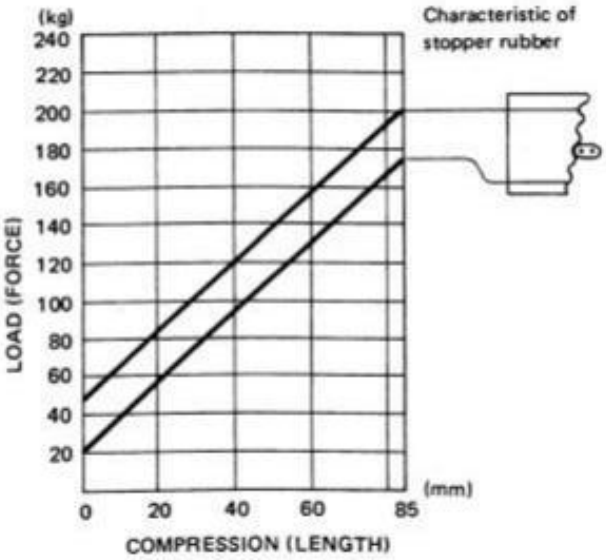

FRONT WHEEL

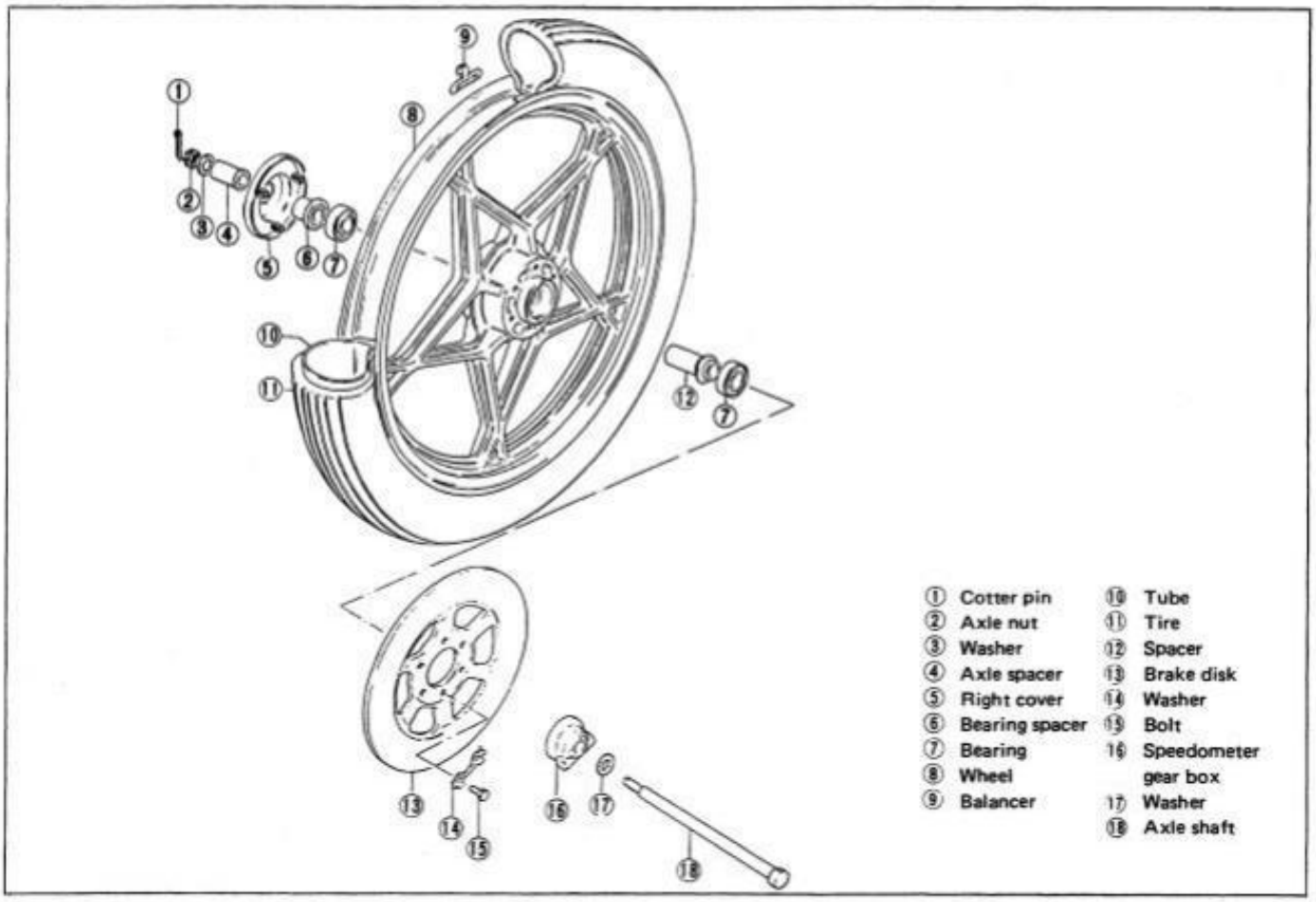

DISASSEMBLY

1. Lift the front wheel off the floor by raising up the engine, with the center stand and jack resting firmly on the floor.
2. Loosen axle nut ② after pulling off cotter pin ①, and loosen axle pinch bolt ③
3. Draw out the axle shaft and take off the wheel.

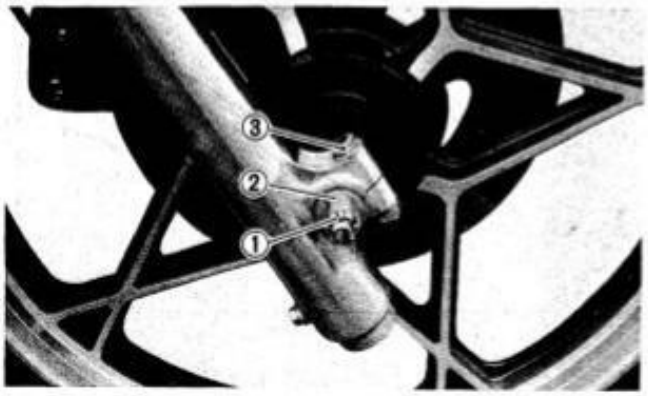

Tightening torque	
Axle pinch bolt	15 – 25 N·m (1.5 – 2.5 kg·m / 11.0 – 18.0 lb-ft)
Axle nut	36 – 52 N·m (3.6 – 5.2 kg·m / 26.0 – 37.5 lb-ft)

TIRE AND TUBE REMOVAL

- Mark the position of the valve stem and rotational direction of the tire with chalk.
- Remove the valve cap and let out the air.
- Remove the valve fastening nut and fully loosen the bead protector nut.

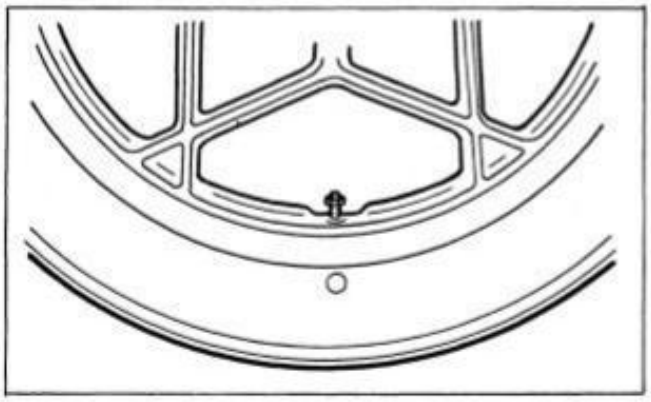

- Step on the tire bead, push it down and as shown below, install the five wheel rim protectors (special tools) to the wheel.

09941-94510	Wheel rim protector
09950-74510	Tire bead breaker

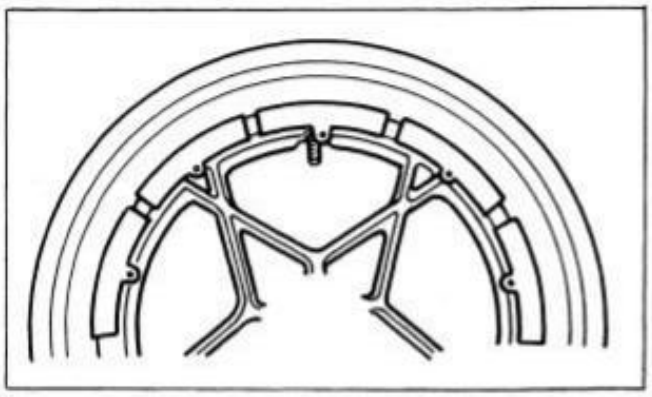

- Using flat tire levers, work the tire bead over the rim, starting near the valve stem.

CAUTION: 1. Always use the wheel rim protectors. If not, the tire rim could be damaged by the tire lever.
2. The tire lever should be applied over the wheel rim protectors.

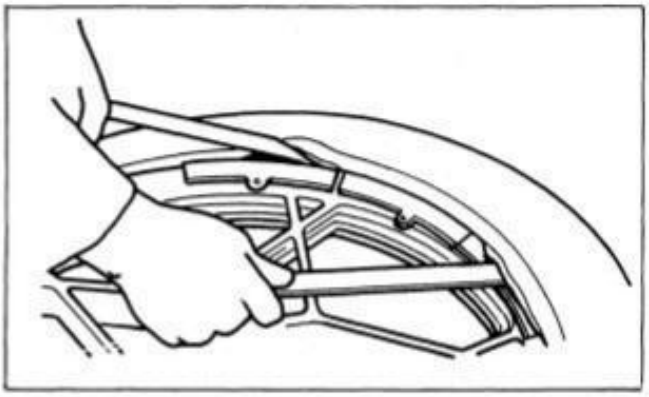

- Remove the tube.
- Remove the tire from the wheel.

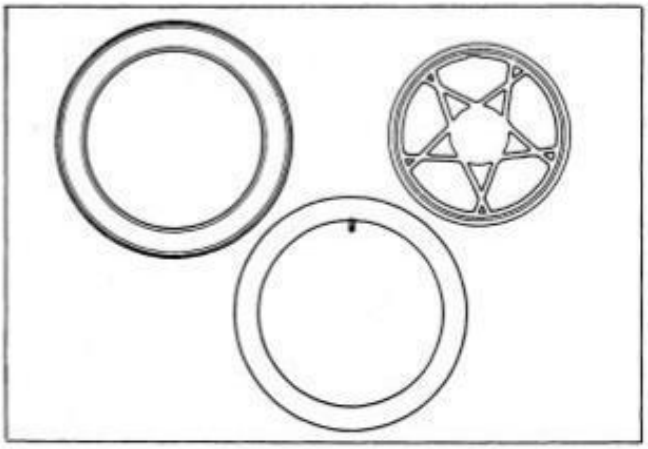

REASSEMBLY

- Inflate the tube sufficiently so that the tube does not fold.
- Push one side of the tire beads into the wheel rim. Be sure that the embossed arrow mark on the tire faces toward the rotational direction of the wheel.

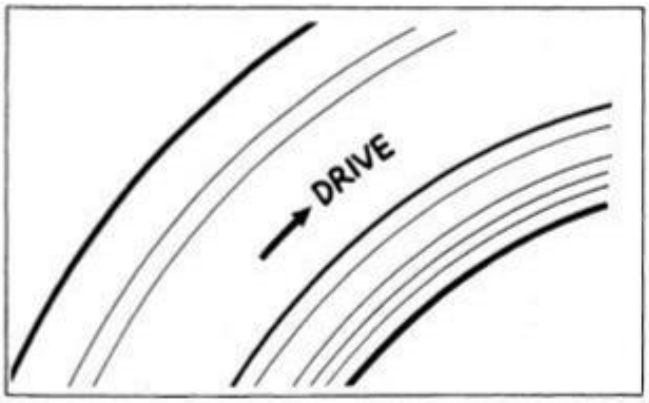

- Next, install the tube, insert the valve into the rim, and tighten the valve nut temporarily. An arrow indicating the rotational direction is marked on the rear tire.
  A yellow mark is provided on the valve portion to aid checking of the tire balance.

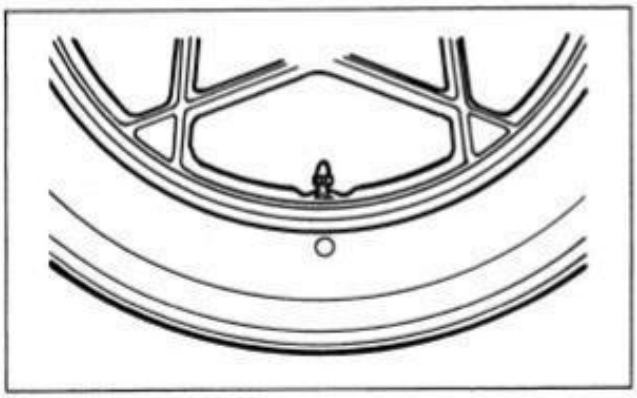

- Apply soapy water to the tire bead.
- Hook the bead protector on the bead portion of the tire.
- Fit the rest of the tire using tire levers in a position well away from the valve.

CAUTION: 1. Avoid inserting the tire levers too deeply into the tube (to avoid damaging the tube).
2. As in tire removal, use the wheel rim protectors.

- By pushing the tire, confirm that the tube is not caught between the rim and tire.
- Inflate the tire to the specified pressure (see page 214).
- Tighten the bead protector nut and then the valve nut.
- Fit the valve cap to the valve.

CHARGING SYSTEM

The GS550E is provided with a regulator and a rectifier but the new GS550L with an integrated type regulator/rectifier.
The following diagram shows the charging circuits for both models:

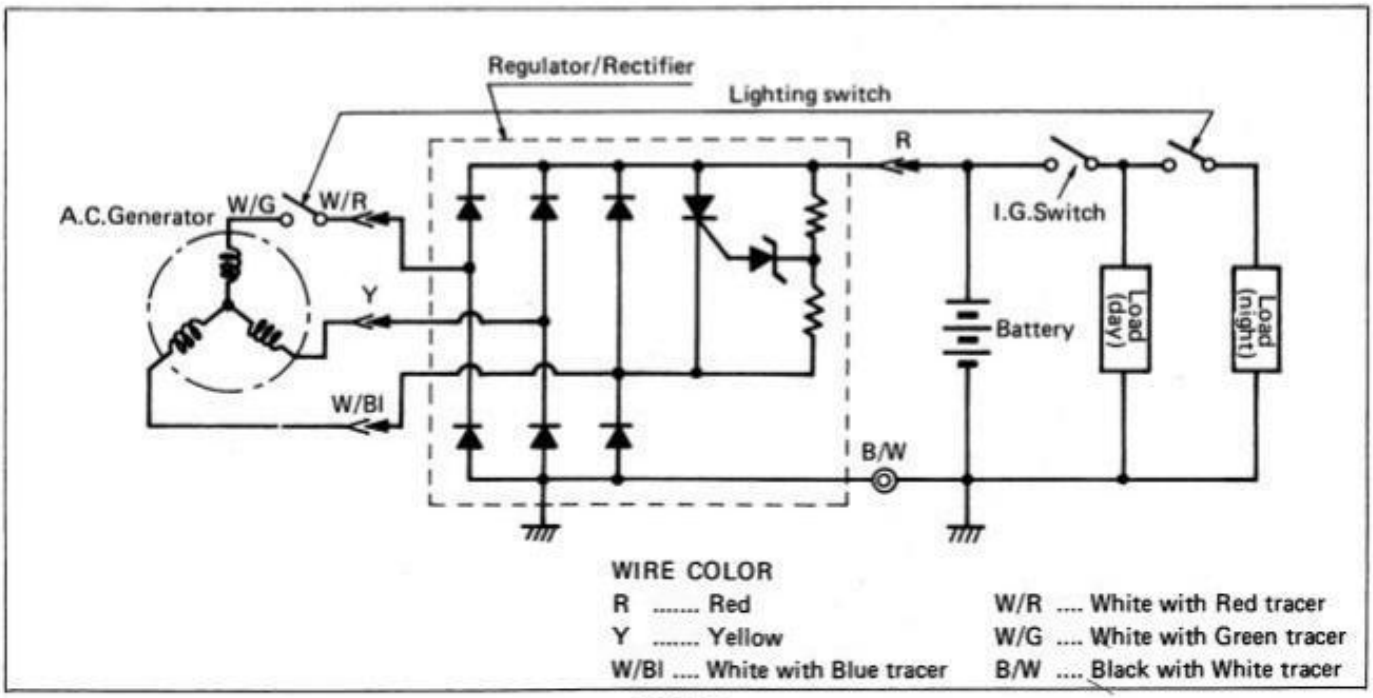

GS550L

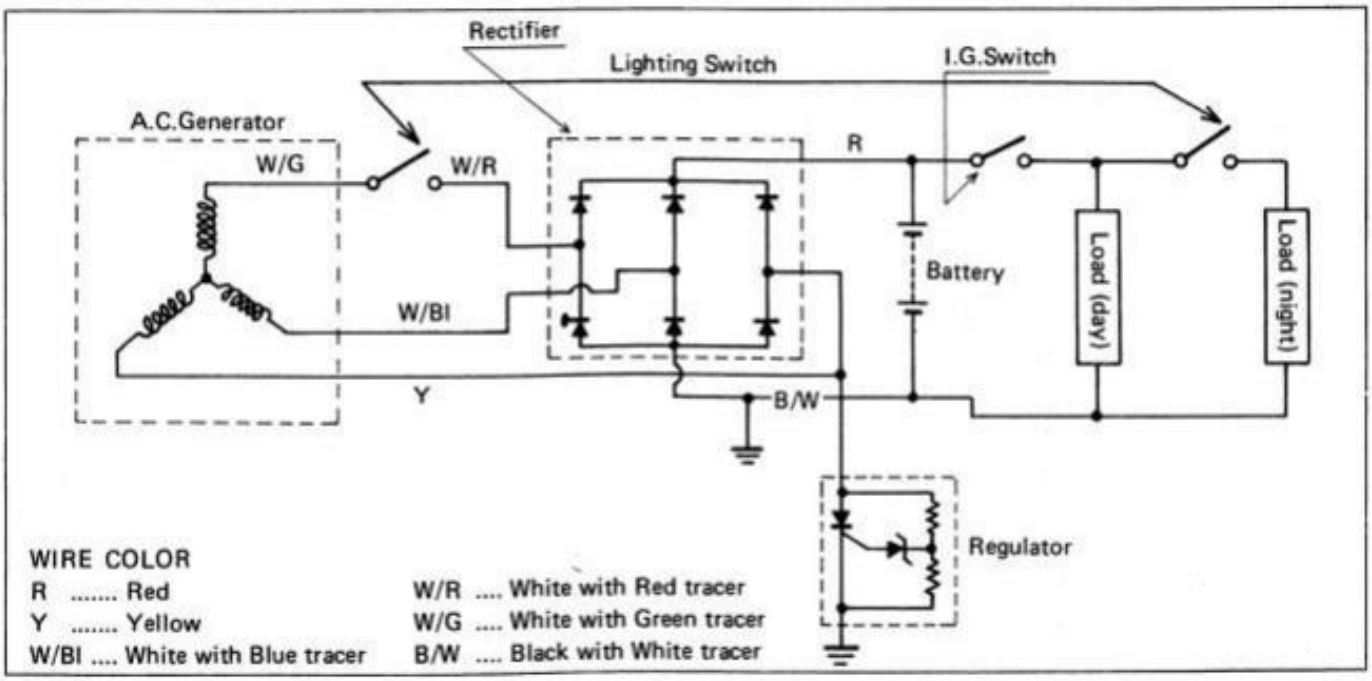

GS550E

INSPECTION AND SERVICING

Due to modifications of the charging circuit, the procedure for inspection of the A.C. generator, regulator and rectifier has been changed as described below.
As the GS550L has an integrated type regulator/rectifier, both regulator and rectifier can be inspected at the same time.

A.C. Generator test:

- Disconnect lead wires, Y, W/G and W/Bl from the A.C. generator.
- Start the engine and keep it running at 5 000 r/min.
- Using the pocket tester (range: A.C. 250V) measure the A.C. voltage between Y – W/G, W/G – W/Bl, and Y – W/Bl.

Engine Speed	A.C. Line Voltage	Electrical condition of A.C. generator
5 000 r/min	70V or over	A.C. generator is satisfactory
	70V under	A.C. generator is faulty

CAUTION: Voltage measurement should be done as quickly as possible to prevent engine overheat.

09900-25002	Pocket Tester

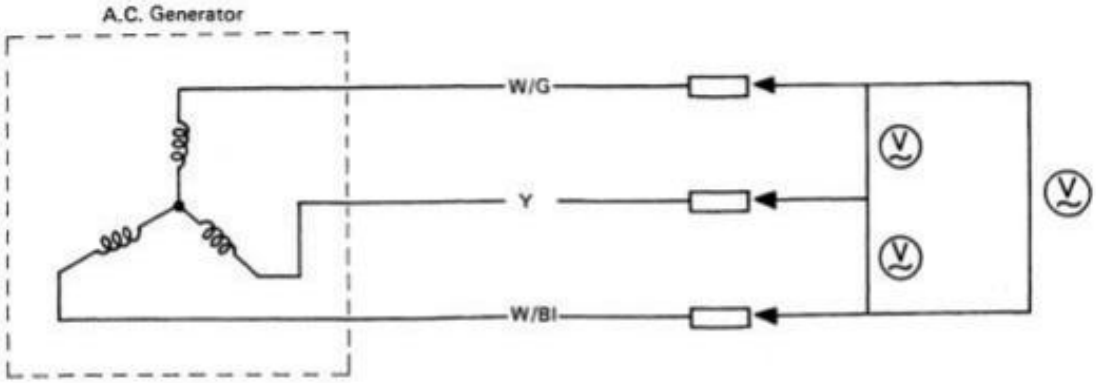

WIRE COLOR
Y ..... Yellow
W/Bl .... White with Blue tracer
W/G .... White with Green tracer

Stator test:

- Using the Pocket Tester, check continuity between the lead wires, Y, W/G and W/Bl. Also check that the stator core is insulted.
- If there is no continuity between the lead wires, or if there is continuity between the lead wires and stator core, replace the stator with a new one.

Rotor test:

- If the stator is in good condition but the A.C. generator is faulty, replace the rotor with a new one.

CAUTION: Do not give any shock to the rotor to prevent reducing magnetic force.

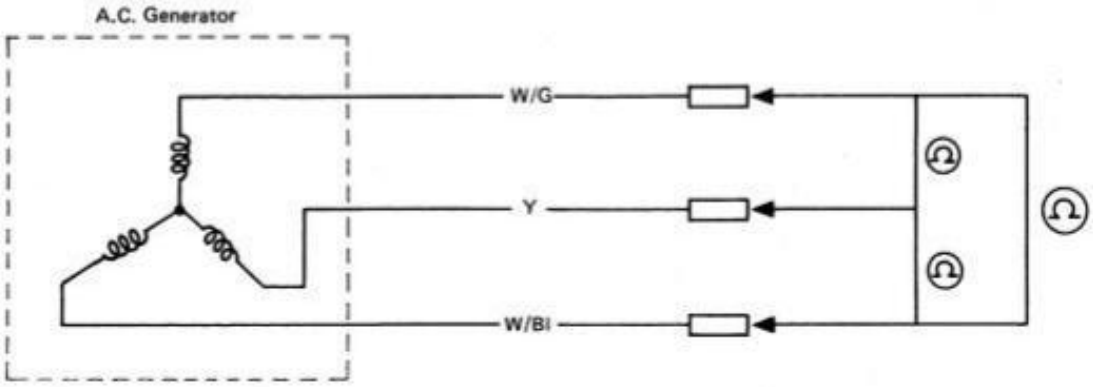

WIRE COLOR
Y ..... Yellow
W/Bl .... White with Blue tracer
W/G .... White with Green tracer

Tester Range: Ω x 1

Regulator/Rectifier test:

- Start the engine and keep it running at 5 000 r/min with the lighting switch turned OFF.
- Contact the (+) lead probe of the Pocket Tester to the (+) terminal of the battery, and connect the (–) lead probe to the (–) terminal, then measure the D.C. voltage.
- If the A.C. generator is in good condition but the regulator/rectifier is faulty, replace the latter with a new one.

09900-25002	Pocket Tester

Engine speed	D.C. line voltage	Electrical condition of Regulator/Rectifier
5 000 r/min	14V – 15.5V	Regulator/Rectifier is satisfactory
	14V under, or 15.5V or over	Regulator/Rectifier is faulty

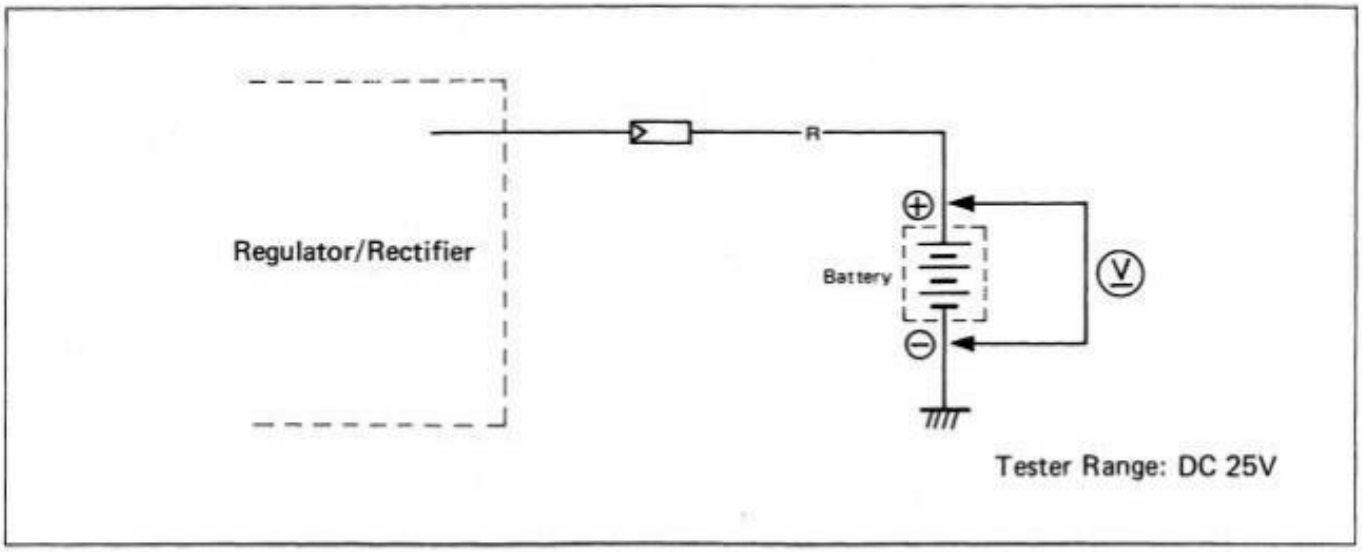

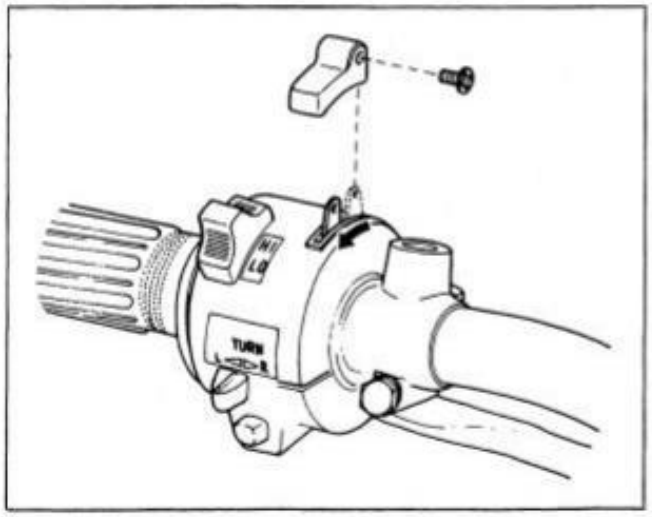

NOTE: When making this test, be sure the battery is in a fully-charged condition.
The switch knob must be removed to place the lighting switch in the OFF position.

– Check resistance between the lead wires using the Pocket Tester.
If the resistance measured is incorrect, replace the regulator/rectifier.
To make this check-up, refer to the charts below:

Tester Range: Ω x 1000

(–) \ (+)	W/R	Y	W/BI	R	B/W
W/R		OFF	ON	ON	OFF
Y	OFF		ON	ON	OFF
W/BI	OFF	OFF		ON	OFF
R	OFF	OFF	ON		OFF
B/W	ON	ON	ON	ON	

R ..... Red
Y ..... Yellow
B/W .... Black with White tracer
W/BI .... White with Blue tracer
W/R .... White with Red tracer

COMBINATION METER

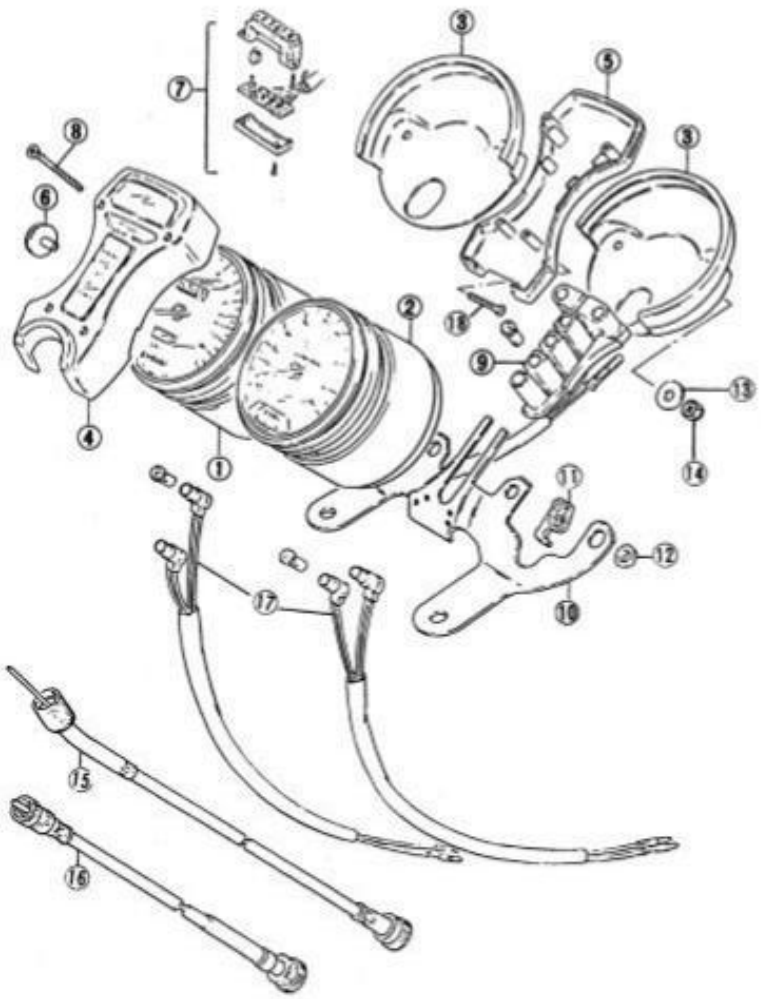

① Speedometer
② Tachometer
③ Under cover
④ Indicator light upper case
⑤ Under cover
⑥ Knob
⑦ Gear position indicator light ass'y
⑧ Securing screw
⑨ Indicator bulb socket
⑩ Meter bracket
⑪ Meter cushion
⑫ Meter cushion
⑬ Washer
⑭ Cap nut
⑮ Speedometer cable
⑯ Tachometer cable
⑰ Meter bulb socket
⑱ Securing screw

INDICATOR LIGHT BULB REPLACEMENT

- Remove the four indicator light upper case securing screws and take off the upper case.
- After installing a new bulb, check for continuity. If the bulb does not light, inspect the wiring for open or short circuits.

METER DISASSEMBLY

- Disconnect the speedometer cable and tachometer cable.
- Loosen the four under-cover cap nuts. Pull out the speedometer and tachometer.

NOTE: When removing the under-cover, speedometer and tachometer, be careful so that the meter cushions, washers and cap nuts are not lost.

FUEL GAUGE

WIRING

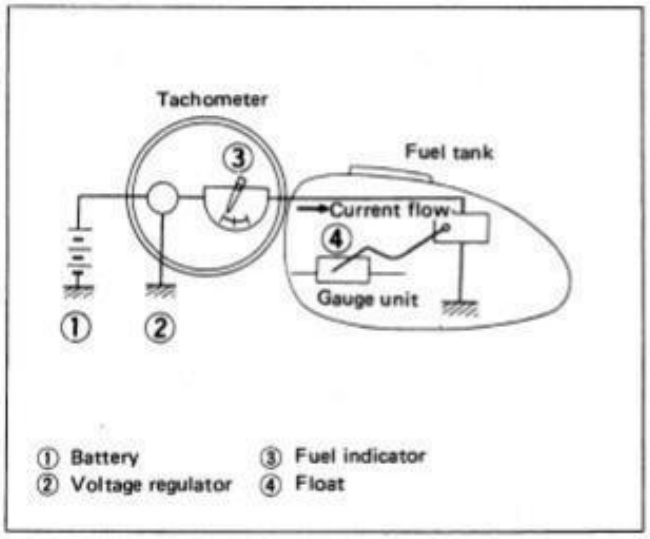

1. The above drawing is a schematic of fuel gauge wiring. The internal resistance value of the gauge unit is adapted to vary with the height of the float. It is difficult for current to pass through the circuit when the resistance value is high, and consequently the swing of the meter is small (close to point E).
   The more current passes through the circuit, increasing the swing of the pointer (close to point F), when the resistance value is low.
2. The relationships between the amount of gasoline and meter indications are as follows:

Amount of gasoline (L)	Meter indication
1.5	Point E −2°30′
1.9	E
3.6	Red zone max. limit
4.8	1/2
8.2	F
9.1	Point F + 5°

The meter points to E −2°30′ when the amount of gasoline is between 0 to 1.5 liters. Also the meter points to F +5° when the amount of gasoline in the tank is between 9.1 liters and full.

3. Construction of each portion and operating meter.

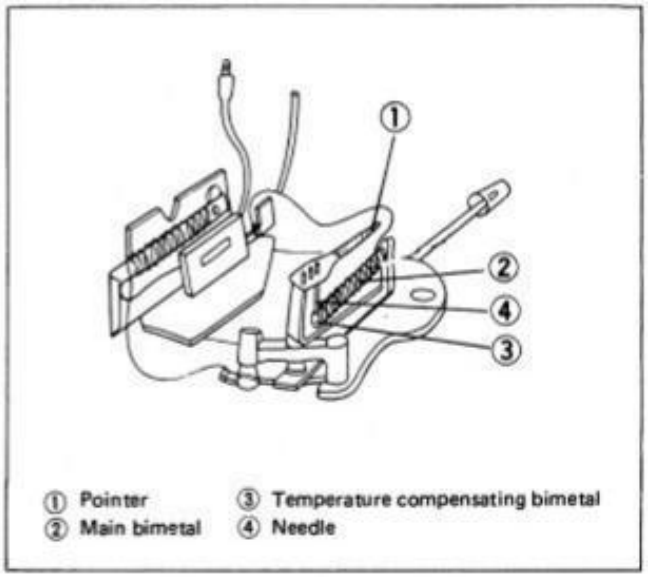

- Main operation
  Current passing through the heater wire deflects the main bimetal causing the pointer to move.
- Auxiliary operation
  This compensates for variations in temperature and voltage. A temperature compensating bimetal is provided so that no indication errors occur due to temperature changes inside the meter:

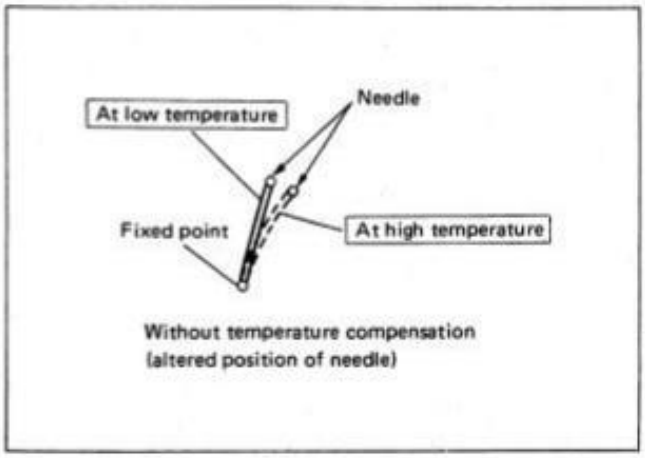

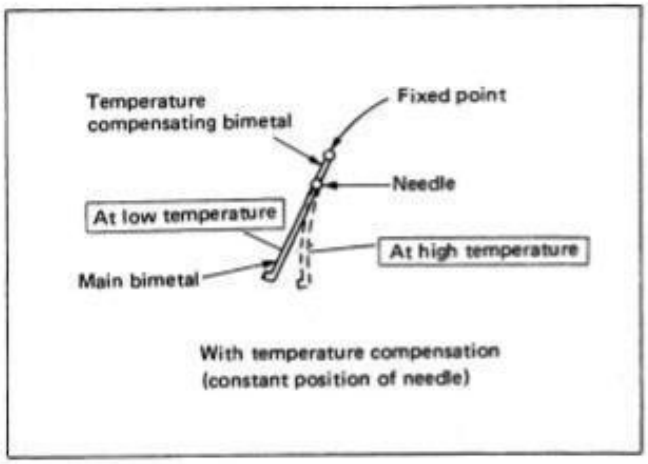

Even if the temperature rises inside the meter and causes the main bimetal to deflect as shown in the above drawing, the temperature compensating bimetal will deflect to the same degree as the main bimetal, in the reverse direction, to keep the needle position constant.

- Voltage regulator

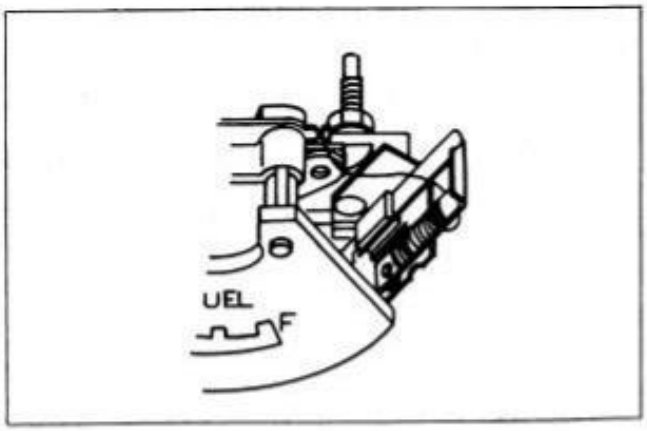

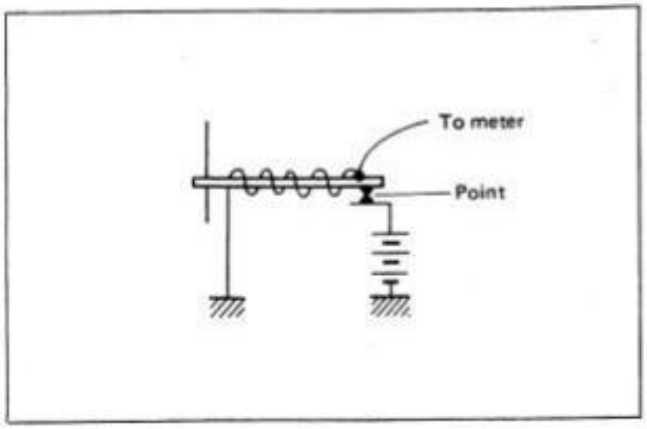

The passage of current through the heater wire deflects the bimetal and causes point separation. This point separation stops the current until the bimetal begins to cool which causing the point to connect again.

A large amount of current passes through the heater wire when the supply voltage is high, causing the bimetal to deflect quickly, and the points to separate. This is illustrated in the following drawing which shows that the average current is constant.

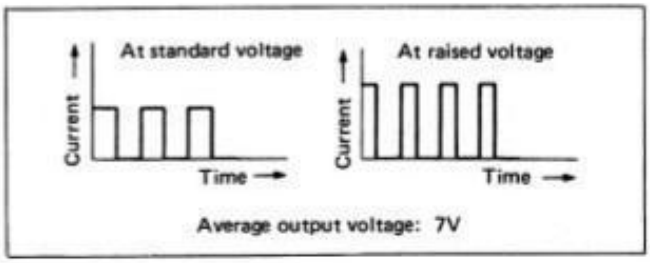

- Gauge unit
  The displacement of the float changes the position of the contact plate which slides on a wire wound resistor causing the resistance value to vary.

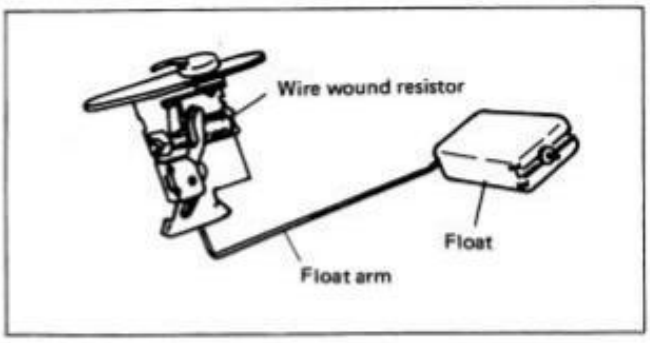

INSPECTION OF FUEL METER AND GAUGE

The fuel meter is enclosed within the tachometer assembly.

The following table is used for troubleshooting.

Amount of gasoline (L)	1.5	1.9	3.6	4.8	8.2	9.1
Resistance (Ω)	110	95	50	32.5	7	3

Pointer failure and minus indication
(1) Meter pointer fails to move.
(2) Meter has a substantial minus indication when key is turned on.

Checking method

(1) Determine whether trouble is within meter or gauge.
Remove gauge connector to short-circuit meter side of same connector (make gauge resistance equal to zero Ω), and observe meter indication.

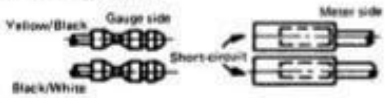

- Meter pointer fails to move → Meter side defective → Check (2)
- Meter pointer swings to extreme position → Gauge defective → Check (3)

(2) Meter check.
Ground meter terminal of meter side connector directly to frame and observe meter indication.

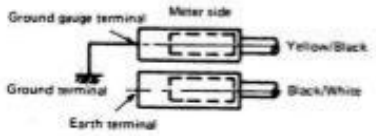

- Meter pointer fails to move → Meter side defective → Check (5)
- Meter pointer swings to extreme position → Wiring harness defective → Check (4)
  (Contact of connector terminal)

(3) Gauge check.
Measure resistance value between two terminals of gauge side connector.
(Full = 1 ~ 5 Ω : Empty = 103 ~ 117 Ω)

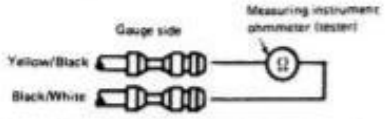

- Large, unstable resistance (More than 117 Ω) → Gauge defective → Replace gauge
- Normal resistance value (1 – 117 Ω) → Wiring harness defective → Check (4)
  (Contact of connector terminal)

(4) Connector contact check (wiring harness side).
Strengthen spring pressure against terminal at wiring harness side connector (to improve contact) and observe meter indication.
(by normal wiring)

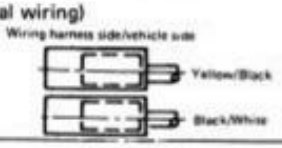

→ Normal indication of meter

(5) Connector contact check (wiring harness side).
Strengthen spring pressure against terminal of 3-pole connector at wiring harness side (to improve contact) and observe meter indication.

Carry out check (2) at the same time.

- Meter pointer swings to extreme position → Connector contact defective
- Meter pointer fails to move → Meter defective → Change meter

Meter pointer swings to extreme position and indicates plus.
(1) Swinging-up of pointer.
(2) Substantially plus indication of meter.

Method of checking

(6) Meter side check.
Remove gauge connector (without connecting gauge) and observe meter indication.

- With meter indication (operates) → Meter defective → Change meter
- With no meter indication → Check (7)

(7) Gauge side check.
Measure resistance value of gauge according to (3).

- Small resistance, 0 Ω → Defective unit → Change meter
  (Full → less than 0.5 Ω)
  (Empty → less than 102 Ω)
- Normal resistance value → Check (8)

(8) Meter side check (operate voltage regulator).
Check meter voltage between gauge terminal (yellow/black lead wire) of meter or gauge terminal (as it is connected) of connector for gauge and ground.

- Indicates interrupted voltage → Meter defective → Change meter
  (Even when meter is normal, interrupted voltage can be obtained. However, here, the meter is defective because the pointer swings to extreme position.)
- Indicates constant voltage → Check (9)

(9) Meter side check.
Remove 3-pole meter side connector and measure resistance value between positive terminal and ground terminal.

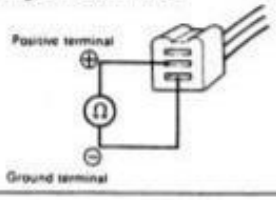

- Large resistance infinite → Meter defective → Change meter
- Resistance value (55 – 85 Ω) → Wiring harness defective → Check (10)

(10) Ground connector check.
Check grounding condition of ground terminal of 3-pole meter side connector at vehicle side. Measure resistance value between ground terminal shown in drawing (5) and frame grounding.

- Large resistance, no conductance → Ground wire harness defective → Check (11)
- Resistance 0 Ω → Defective contact of meter side connector → Check (11)

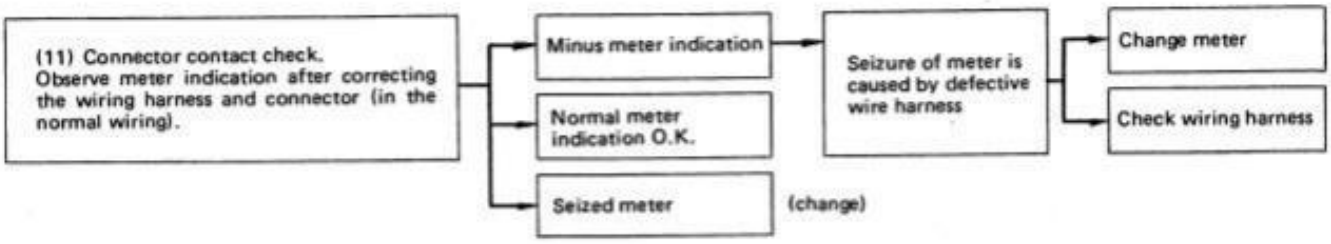

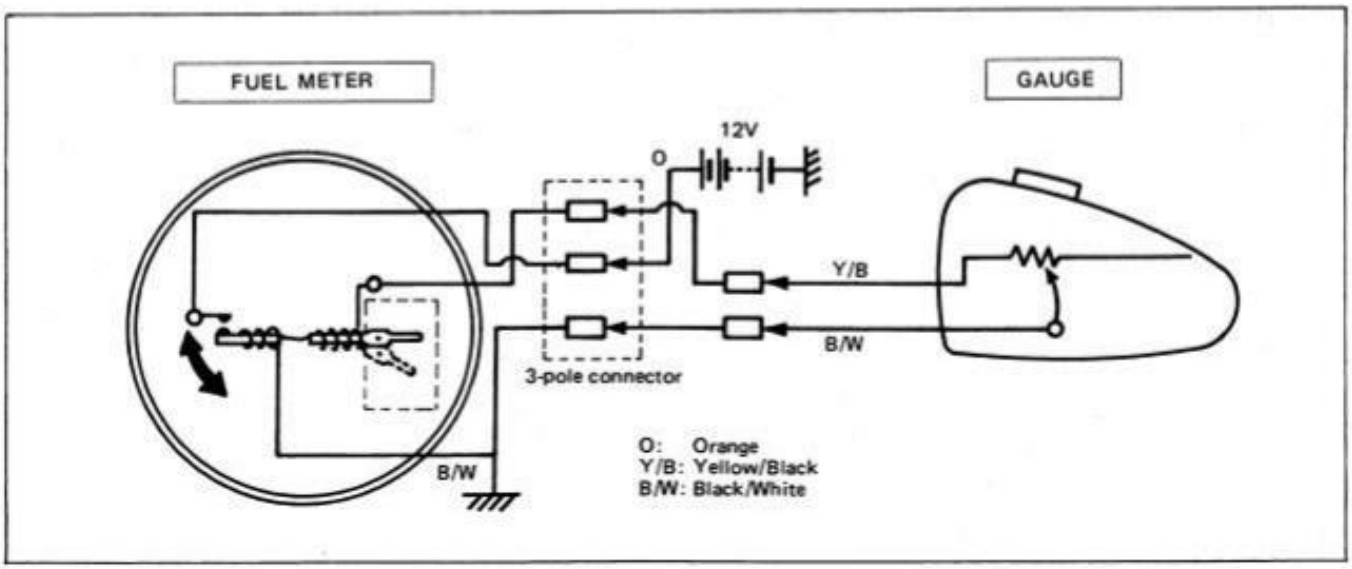

Check of resistance value between terminals
Meter side

Orange — Yellow/Black 45 – 65 Ω
Orange — Black/White 55 – 85 Ω

Gauge side

Full 1 – 5 Ω
Empty 103 – 117 Ω

WIRE AND CABLE ROUTING

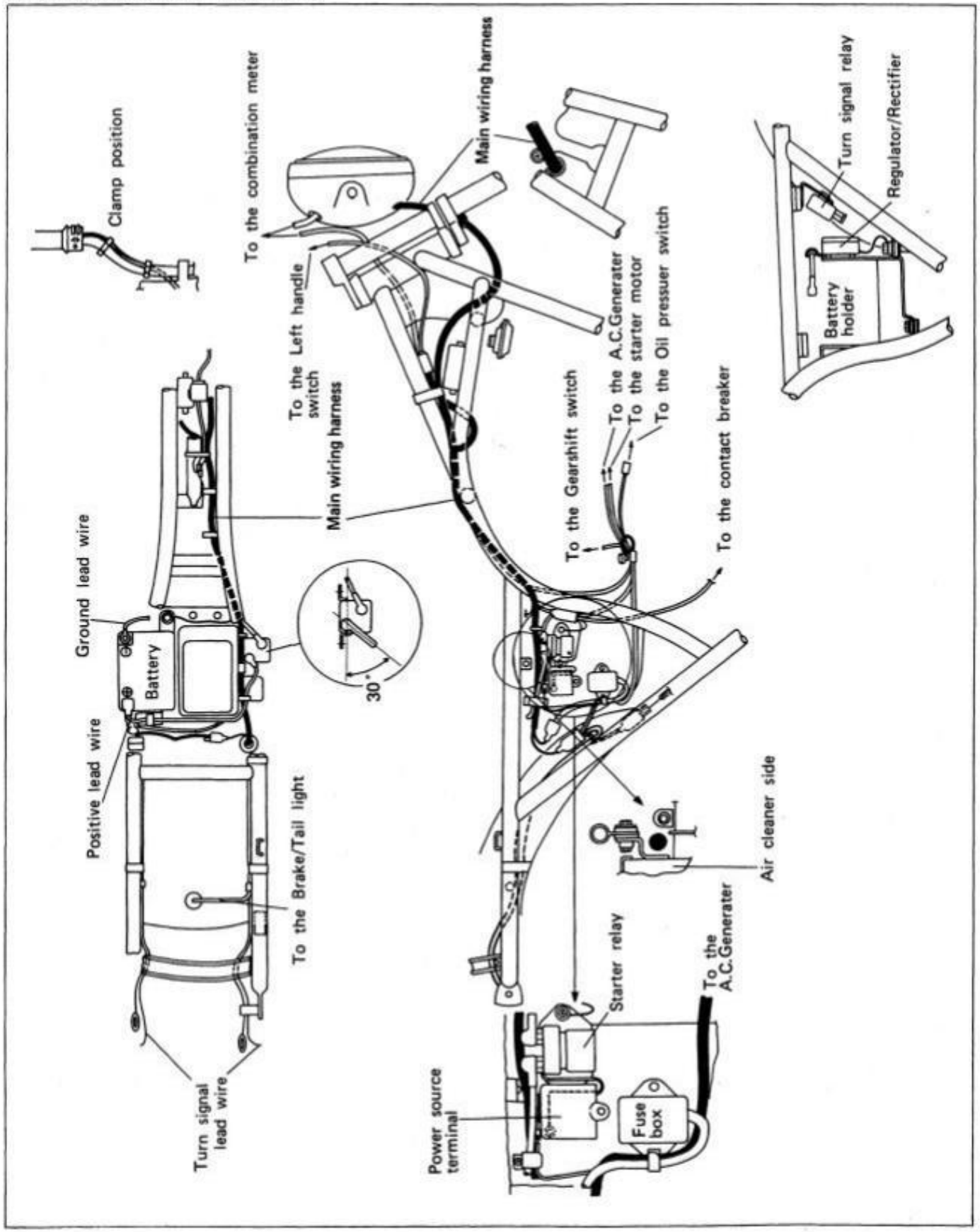

How to set the high-tension cord.

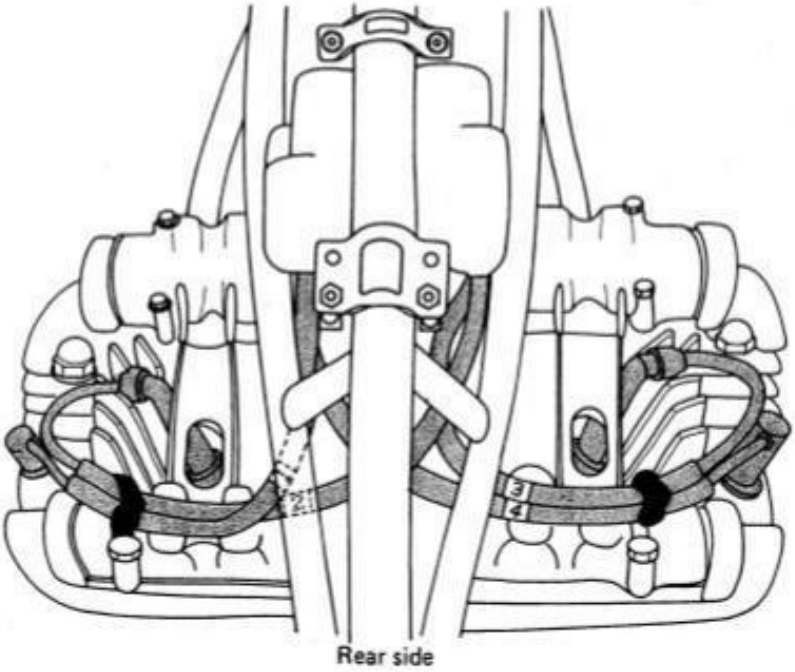

CABLE ROUTING

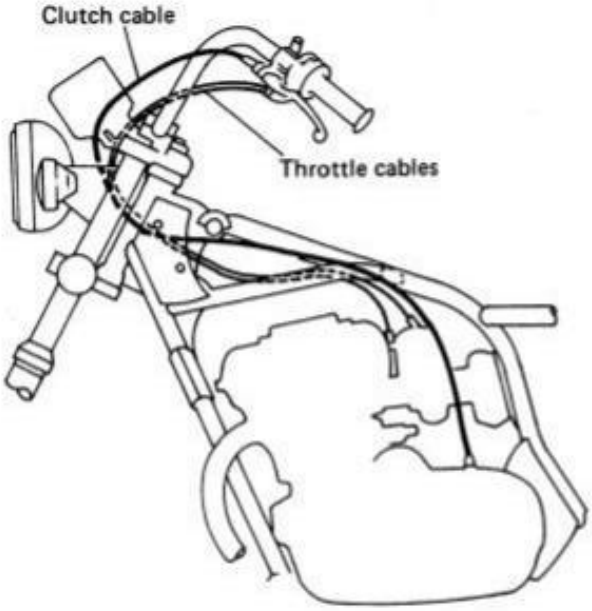

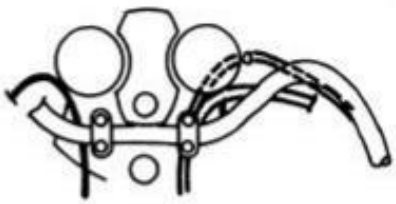

WIRING DIAGRAM

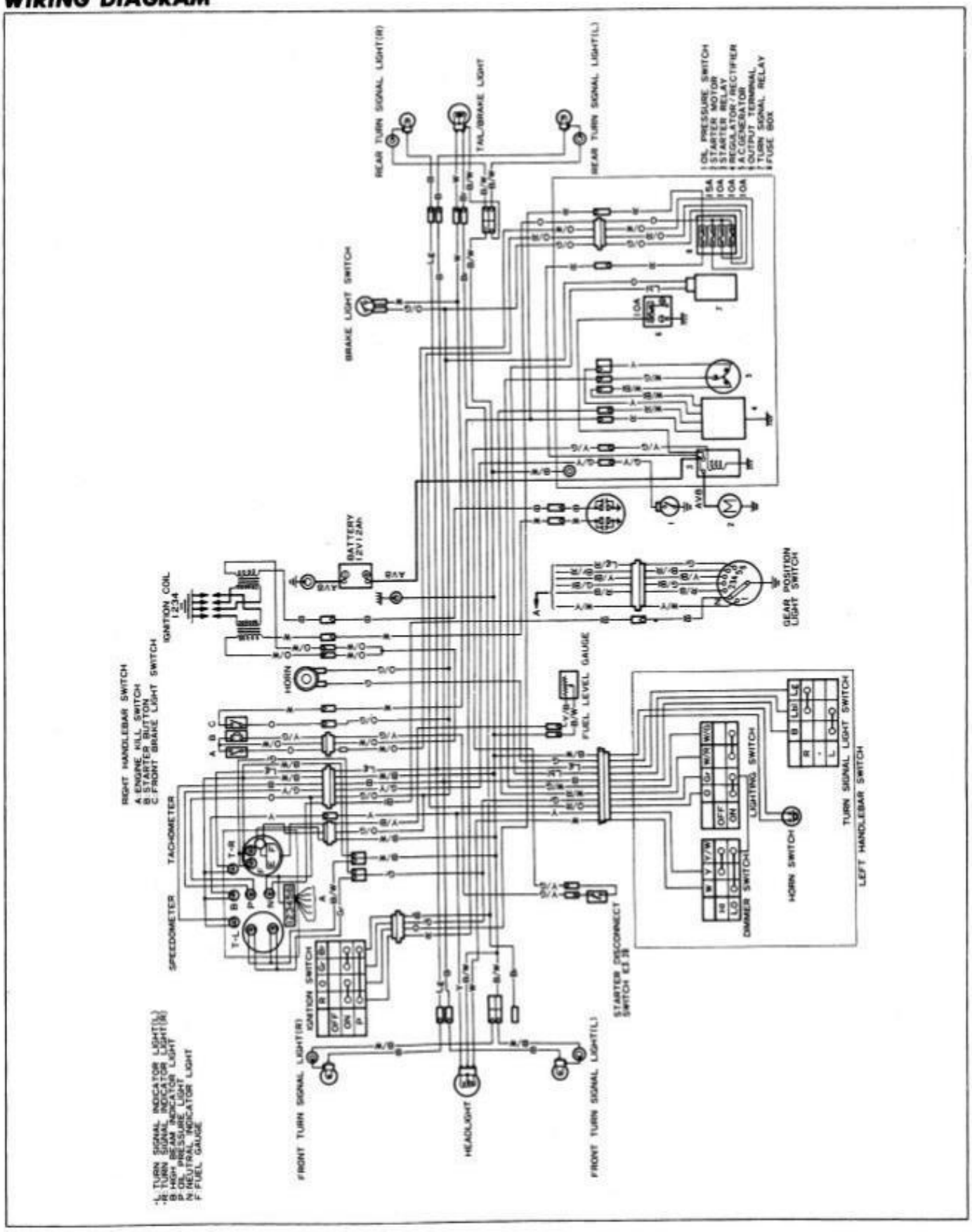

GS550T/LT(E-01)

GROUP 15

Please refer to the sections 1 through 14 of this service manual except for the items described in this section.

This section covers three models of the GS550 series: GS550, GS550D and GS550E for the specifications except U.S.A.

GS550: Spoked wheel and front single disc brake model
GS550D: Spoked wheel and front double disc brake model
GS550E: Cast wheel model

CONTENTS

GS550T

SPECIFICATIONS 237
SERVICE DATA 239
TORQUE TABLE 250
SPECIAL MATERIALS 252
MODIFICATIONS 254
FUEL SYSTEM 259
CHARGING SYSTEM 276
FULL-TRANSISTORIZED IGNITION SYSTEM 280
STEERING STEM 282
FRONT MASTER CYLINDER 287
FRONT CALIPER 291
WIRE AND CABLE ROUTING 295
WIRING DIAGRAM 297

GS550LT

SPECIFICATIONS 302
SERVICE DATA 304
FUEL COCK 306
WIRE AND CABLE ROUTING 307
WIRING DIAGRAM 309

GS550T

Right side

Left side

SPECIFICATIONS

DIMENSIONS AND DRY MASS

Overall length	2 175 mm (85.6 in)
Overall width	850 mm (33.5 in)
Overall height	1 155 mm (45.5 in)
Wheelbase	1 435 mm (56.5 in)
Ground clearance	150 mm (5.9 in)
Dry mass	196 kg (432 lbs) . . . GS550, GS550E (Only for Canada)
	205 kg (452 lbs) . . . GS550D, GS550E
Gross vehicle weight rating	365 kg (804 lbs)

ENGINE

Type	Four-stroke, air-cooled, DOHC
Number of cylinders	4
Bore	56.0 mm (2.205 in)
Stroke	55.8 mm (2.197 in)
Piston displacement	549 cm^3 (33.5 cu.in)
Compression ratio	8.6 : 1
Carburetor	MIKUNI BS32SS, four
Air cleaner	Polyurethane foam element
Starter system	Electric
Lubrication system	Wet sump

TRANSMISSION

Clutch	Wet multi-plate type
Transmission	6-speed constant mesh
Gearshift pattern	1-down, 5-up
Primary reduction	1.977 (87/44)
Final reduction	3.333 (50/15)
Gear ratios, Low	2.666 (32/12)
2nd	1.777 (32/18)
3rd	1.380 (29/21)
4th	1.173 (27/23)
5th	1.045 (23/22)
Top	0.956 (22/23)
Drive chain	DAIDO D.I.D. 50HDL or
	TAKASAGO RK50SHO, 110 links

CHASSIS

Front suspension	Telescopic, oil dampened
Rear suspension	Swinging arm, oil dampened, spring 5-way adjustable
Steering angle	40° (right and left)
Caster	61° 00′
Trail	120 mm (4.72 in)
Turning radius	2.6 m (8.5 ft)

Front brake	Disc brake . . . GS550, GS550E (Only for Canada)
	Disc brake, twin . . . GS550D, GS550E
Rear brake	Internal expanding . . . GS550, GS550D
	Disc brake . . . GS550E
Front tire size	3.25H19-4PR
Rear tire size	3.75H17-4PR
Front tire pressure	175 kPa (1.75 kg/cm², 25 psi) (Normal solo riding)
Rear tire pressure	200 kPa (2.00 kg/cm², 28 psi) (Normal solo riding)

ELECTRICAL

Ignition type	Battery ignition
	Transistorized (Only for Canada)
Ignition timing	17° B.T.D.C. below 1 500 r/min and
	37° B.T.D.C. above 2 350 r/min
	15° B.T.D.C. below 1 500 r/min and
	40° B.T.D.C. above 2 350 r/min (Only for Canada)
Spark plug	NGK B8ES or NIPPON DENSO W24ES-U
Spark plug gap	0.6 – 0.8 mm (0.024 – 0.031 in) both NGK and NIPPON DENSO
Battery	12V 43.2kC (12Ah)/10HR
Generator	Three-phase A.C. generator
Fuse	10/10/10/15A

CAPACITIES

Fuel tank including reserve		16 L (4.2/3.5 US/Imp gal)
	reserve	4.0 L (4.2/3.5 US/Imp qt)
Engine oil	change	2.4 L (2.5/2.1 US/Imp qt)
	filter change	2.6 L (2.7/2.3 US/Imp qt)
	overhaul	2.7 L (2.8/2.4 US/Imp qt)
Front fork oil		165 ml (5.58/5.81 US/Imp oz) in each leg

** Specifications subject to change without notice.*

SERVICE DATA

VALVES + GUIDES

Unit: mm (in)

ITEM	STANDARD		LIMIT
Valve Dia.	IN.	32.0 (1.26)	—
	EX.	27.0 (1.06)	—
Valve lift	IN.	7.2 (0.28)	—
	EX.	7.0 (0.27)	—
Valve clearance or Tappet clearance (when cold)	IN. & EX.	0.03 – 0.08 (0.001 – 0.003)	—
Valve guide to Valve stem clearance	IN.	0.025 – 0.055 (0.0009 – 0.0022)	0.35 (0.014)
	EX.	0.040 – 0.070 (0.0016 – 0.0028)	0.35 (0.014)
Valve guide I.D.	IN. & EX.	7.000 – 7.015 (0.2756 – 0.2762)	—
Valve stem O.D.	IN.	6.960 – 6.975 (0.2740 – 0.2746)	—
	EX.	6.945 – 6.960 (0.2734 – 0.2740)	—
Valve stem runout	IN. & EX.	—	0.05 (0.002)
Valve head thickness	IN. & EX.	—	0.5 (0.02)
Valve seat width	IN. & EX.	1.0 – 1.2 (0.04 – 0.05)	—
Valve head radial runout	IN. & EX.	—	0.03 (0.001)
Valve spring free length (IN. & EX.)	INNER	—	33.9 (1.33)
	OUTER	—	41.3 (1.63)
Valve spring tension (IN. & EX.)	INNER	29.3 – 34.0 kg (64.59 – 74.96 lbs) at length 23 mm (0.91 in)	—
	OUTER	50.4 – 58.3 kg (111.11 – 128.53 lbs) at length 27 mm (1.06 in)	—

CAMSHAFT + CYLINDER + HEAD

Unit: mm (in)

ITEM	STANDARD		LIMIT
Cam height	IN.	35.485 – 35.515 (1.3970 – 1.3982)	35.190 (1.3854)
	EX.	35.285 – 35.315 (1.3892 – 1.3904)	34.990 (1.3776)
Camshaft journal oil clearance	IN. & EX.	0.032 – 0.066 (0.0013 – 0.0026)	0.150 (0.0059)
Camshaft journal holder I.D.	IN. & EX.	22.012 – 22.025 (0.8666 – 0.8671)	——
Camshaft journal O.D.	IN. & EX.	21.959 – 21.980 (0.8645 – 0.8654)	——
Camshaft runout	IN. & EX.	——	0.1 (0.004)
Cam chain 20 pitch length		——	157.80 (6.213)
Cam chain pin (at arrow "3")		20th pin	——
Cylinder head distortion		——	0.2 (0.008)

PISTON + RING + CYLINDER

Unit: mm (in)

ITEM			STANDARD	LIMIT
Compression pressure			900 – 1 200 kPa (9 – 12 kg/cm², 128 – 171 psi)	650 kPa (6.5 kg/cm², 92.4 psi)
Compression pressure difference			——	200 kPa (2 kg/cm², 28 psi)
Piston to Cylinder clearance			0.050 – 0.060 (0.0020 – 0.0024)	0.120 (0.0047)
Cylinder bore			56.000 – 56.015 (2.2047 – 2.2053)	56.080 (2.2079)
Piston Dia.			55.945 – 55.960 (2.2026 – 2.2031) Measure the 15 (0.59) from piston skirt end.	55.880 (2.2000)
Cylinder distortion			——	0.2 (0.008)
Piston ring free end gap	1st	N	Approx. 6.5 (0.26)	5.2 (0.20)
	2nd	N	Approx. 6.5 (0.26)	5.2 (0.20)
Piston ring end gap	1st		0.10 – 0.30 (0.004 – 0.012)	0.7 (0.03)
	2nd		0.10 – 0.30 (0.004 – 0.012)	0.7 (0.03)
Piston ring groove clearance	1st		——	0.180 (0.0071)
	2nd		——	0.150 (0.0059)
Piston ring groove width	1st		1.21 – 1.23 (0.047 – 0.048)	——
	2nd		1.21 – 1.23 (0.047 – 0.048)	——
	Oil		2.51 – 2.53 (0.099 – 0.100)	——
Piston ring thickness	1st		1.175 – 1.190 (0.0463 – 0.0469)	——
	2nd		1.170 – 1.190 (0.0461 – 0.0469)	——
Piston pin bore I.D.			16.002 – 16.008 (0.6300 – 0.6302)	16.030 (0.6311)
Piston pin O.D.			15.995 – 16.000 (0.6297 – 0.6300)	15.980 (0.6291)

CRANKSHAFT

Unit: mm (in)

ITEM	STANDARD	LIMIT
Conrod small end I.D.	16.006 – 16.014 (0.6302 – 0.6305)	16.040 (0.6315)
Conrod deflection	——	3.0 (0.12)
Conrod big end side clearance	0.10 – 0.65 (0.004 – 0.026)	1.0 (0.039)
Crankshaft runout	——	0.05 (0.002)

OIL PUMP

Unit: mm (in)

ITEM	STANDARD	LIMIT
Oil pump reduction ratio	1.821 (87/44 x 35/38)	——
Oil pressure (at 60°C, 140°F)	Above: 10 kPa (0.1 kg/cm², 1.42 psi) Below: 50 kPa (0.5 kg/cm², 7.11 psi) at 3 000 r/min.	——
Tip clearance	——	0.20 (0.008)
Outer rotor clearance	——	0.25 (0.010)
Side clearance	——	0.15 (0.006)

CLUTCH

Unit: mm (in)

ITEM	STANDARD	LIMIT
Clutch cable play	2 – 3 (0.08 – 0.12)	——
Drive plate thickness	2.9 – 3.1 (0.11 – 0.12)	2.6 (0.10)
Drive plate claw width	11.8 – 12.0 (0.46 – 0.47)	11.0 (0.43)
Drive plate distortion	——	0.2 (0.008)
Driven plate thickness	1.6 ± 0.06 (0.06 ± 0.002)	——
Driven plate distortion	——	0.1 (0.004)
Clutch spring free length	——	35.9 (1.41)
Primary drive to Driven gear backlash	0 – 0.03 (0 – 0.001)	0.08 (0.003)

TRANSMISSION

Unit: mm (in)

ITEM	STANDARD		LIMIT
Primary reduction	1.977 (87 / 44)		—
Final reduction	3.333 (50 / 15)		—
Gear ratios	Low	2.666 (32 / 12)	—
	2nd	1.777 (32 / 18)	—
	3rd	1.380 (29 / 21)	—
	4th	1.173 (27 / 23)	—
	5th	1.045 (23 / 22)	—
	Top	0.956 (22 / 23)	—
Gear backlash	Low	0.04 (0.002)	0.09 (0.004)
	2nd	0.04 (0.002)	0.09 (0.004)
	3rd	0.04 (0.002)	0.09 (0.004)
	4th	0.04 (0.002)	0.09 (0.004)
	5th	0.05 – 0.10 (0.002 – 0.004)	0.15 (0.006)
	Top	0.05 – 0.10 (0.002 – 0.004)	0.15 (0.006)
Shift fork to Groove clearance	0.1 – 0.3 (0.004 – 0.012)		0.5 (0.020)
Shift fork groove width	5.5 – 5.6 (0.217 – 0.220)		—
Shift fork thickness	5.3 – 5.4 (0.195 – 0.199)		—
Drive chain	Type	D.I.D.: 50HDL TAKASAGO: RK50SHO	—
	Links	110	—
	20 pitch length	—	320.0 (12.60)
Drive chain slack	20 – 30 (0.8 – 1.2)		—

CARBURETOR

Unit: mm (in)

ITEM		SPECIFICATION
Carburetor type		MIKUNI BS32SS
Bore size		32 (1.26)
I.D. No.		47090
Idle r/min.		1 100 ± 100 r/min.
Fuel level		5.0 ± 0.5 (0.20 ± 0.02)
Float height		22.4 ± 1.0 (0.88 ± 0.04)
Main jet	(M.J.)	#92.5
Main air jet	(M.A.J.)	1.6
Jet needle	(J.N.)	5F42-3
Needle jet	(N.J.)	X-6
Pilot jet	(P.J.)	40
By pass	(B.P.)	1.0, 0.8, 0.8
Pilot outlet	(P.O.)	0.7
Valve seat	(V.S.)	2.0
Starter jet	(G.S.)	35
Pilot screw	(P.S.)	3½
Throttle cable play		0.5 – 1.0 (0.02 – 0.04)

ELECTRICAL

Unit: mm (in)

ITEM	SPECIFICATION		
Ignition timing	17° B.T.D.C. Below 1 500 ± 100 r/min. and 37° B.T.D.C. Above 2 350 ± 100 r/min.		
	15° B.T.D.C. Below 1 500 ± 100 r/min. and 40° B.T.D.C. Above 2 350 ± 100 r/min. (Only for Canada)		
Firing order	1 · 2 · 4 · 3		
Spark plug	Type	NGK: B8ES N.D.: W24ES-U	
	Gap	0.6 – 0.8 (0.024 – 0.031)	
Spark performance	Over 8 (0.3) at 1 atm		
Contact point gap	0.35 ± 0.05 (0.014 ± 0.002)		(Except for Canada)
Dwell angle	N.D.	190°	
Condensor capacity	N.D.	0.25 ± 0.03 μF	
Signal coil resistance	Approx.	60 – 80 Ω Br–B/W and G/W–B/W (Only for Canada)	
Ignition coil resistance	Primary	O/W–W or B Approx. 3.5 – 4.5 Ω	
		O/W–W or B/Y Approx. 3.5 – 4.5 Ω (Only for Canada)	
	Secondary	Plug cap – Plug cap Approx. 34 – 36 kΩ	
		Plug cap – Plug cap Approx. 35 – 38 kΩ (Only for Canada)	
Generator No-Load voltage	More than 80 V (AC) at 5 000 r/min.		
Regulated voltage	14.0 – 15.5 V at 5 000 r/min.		
Starter motor	Brush length	Limit: 9 (0.35)	
	Commutator under cut	Limit: 0.2 (0.008)	
Starter relay resistance	3 – 4 Ω		
Battery	Type designation	YB10L – A2	
	Capacity	12V 43.2kC (12Ah)/10HR	
	Standard electrolyte S.G.	1.28 at 20°C (68°F)	
Fuse size	Main	15A	
	Headlight	10A	
	Turn signal	10A	
	Ignition	10A	

BRAKE + WHEEL

Unit: mm (in)

ITEM		STANDARD	LIMIT
Rear brake pedal free travel For GS550 & GS550D		20 – 30 (0.8 – 1.2)	——
Rear brake pedal height		10 (0.04)	——
Brake drum I.D. For GS550 & GS550D	Rear	——	180.7 (7.11)
Brake lining thickness For GS550 & GS550D	Rear	——	1.5 (0.06)
Brake disc thickness	Front	6.7 ± 0.2 (0.26 ± 0.008) For GS550 & GS550E (Canada)	6.0 (0.24)
		5.0 ± 0.2 (0.20 ± 0.008) For GS550D & GS550E	4.5 (0.18)
	Rear	6.7 ± 0.2 (0.26 ± 0.008) For GS550E	6.0 (0.24)
Brake disc runout		——	0.30 (0.012)
Master cylinder bore	Front	14.000 – 14.043 (0.5512 – 0.5529) For GS550 & GS550E (Canada)	——
		15.870 – 15.913 (0.6248 – 0.6265) For GS550D & GS550E	——
	Rear	14.000 – 14.043 (0.5512 – 0.5529) For GS550E	——
Master cylinder piston dia.	Front	13.941 – 13.968 (0.5489 – 0.5499) For GS550 & GS550E (Canada)	——
		15.811 – 15.838 (0.6225 – 0.6235) For GS550D & GS550E	——
	Rear	13.957 – 13.984 (0.5495 – 0.5506) For GS550E	——
Brake caliper cylinder bore	Front	42.860 – 42.899 (1.6874 – 1.6889) For GS550 & GS550E (Canada)	——
		38.180 – 38.219 (1.5031 – 1.5047) For GS550D & GS550E	——
	Rear	38.180 – 38.256 (1.5031 – 1.5061) For GS550E	——
Brake caliper piston dia.	Front	42.785 – 42.810 (1.6844 – 1.6854) For GS550 & GS550E (Canada)	——
		38.025 – 38.050 (1.4970 – 1.4980) For GS550D & GS550E	——
	Rear	38.098 – 38.148 (1.4999 – 1.5019) For GS550E	——

Unit: mm (in)

ITEM	STANDARD		LIMIT
Wheel rim runout	Axial	—	2.0 (0.08)
	Radial	—	2.0 (0.08)
Wheel axle runout	Front	—	0.25 (0.010)
	Rear	—	0.25 (0.010)
Tire size	Front	3.25H19-4PR	—
	Rear	3.75H18-4PR	—
Tire tread depth	Front	—	1.6 (0.06)
	Rear	—	2.0 (0.08)

SUSPENSION

Unit: mm (in)

ITEM	STANDARD		LIMIT
Front fork stroke	150 (5.9)		—
Front fork spring free length	Upper	—	93.0 (3.66) GS550, GS550E (Only for Canada)
		—	121.0 (4.80) GS550D, GS550E
	Lower	—	393.0 (15.47) GS550, GS550E (Only for Canada)
		—	365.0 (14.37) GS550D, GS550E
Front fork oil level	204 (8.03)		—
Rear wheel travel	100 (3.9)		—
Swinging arm pivot shaft runout	—		0.3 (0.012)

FUEL + OIL + CAPACITY

Unit: mm (in)

ITEM	SPECIFICATION	
Fuel type	Gasoline used should be graded 90 or higher octane in Research Method	
Fuel tank including reserve	16 L (4.2/3.5 US/Imp gal)	
reserve	4.0 L (4.2/3.5 US/Imp qt)	
Engine oil type	SAE 10W/40	
Engine oil capacity	Change	2 400 ml (2.5/2.1 US/Imp qt)
	Filter change	2 600 ml (2.7/2.3 US/Imp qt)
	Overhaul	2 700 ml (2.8/2.4 US/Imp qt)
Front fork oil type	Mixture ratio SAE 10W/30 : SAE 5W/20 = 1 : 1	
Front fork oil capacity (each leg)	165 ml (5.58/5.81 US/Imp oz)	
Brake fluid type	SAE J1703	

TIRE PRESSURE

COLD INFLATION TIRE PRESSURE	NORMAL RIDING						CONTINUOUS HIGH SPEED RIDING					
	SOLO RIDING			DUAL RIDING			SOLO RIDING			DUAL RIDING		
	kPa	kg/cm²	psi	kPa	kg/cm²	psi	kPa	kg/cm²	psi	kPa	kg/cm²	psi
FRONT	175	1.75	25	175	1.75	25	200	2.00	28	200	2.00	28
REAR	200	2.00	28	225	2.25	32	225	2.25	32	280	2.80	40

WATTAGE

Unit: (W)

ITEM		SPECIFICATION												
		E-01	E-02	E-04	E-15	E-18	E-21	E-22	E-24	E-25	E-26	E-28	E-30	E-34
Headlight	HI	50	45	←	←	←	←	←	50	45	←	50	←	45
	LO	40	45	40	←	←	←	←	←	←	←	←	←	←
Parking or city light			4	←	←	←	←	←		4	←		←	4
Tail/Brake light		8/23	5/21	←	←	←	←	←	8/23	5/21	←	8/23	←	5/21
Turn signal light		23	21	←	←	←	←	←	23	21	←	23	←	21
Speedometer light		3.4	←	←	←	←	←	←	←	←	←	←	←	←
Tachometer light		3.4	←	←	←	←	←	←	←	←	←	←	←	←
Turn signal indicator light		3.4	←	←	←	←	←	←	←	←	←	←	←	←
High beam indicator light		3.4	←	←	←	←	←	←	←	←	←	←	←	←
Neutral indicator light		3.4	←	←	←	←	←	←	←	←	←	←	←	←
Oil pressure indicator light		3.4	←	←	←	←	←	←	←	←	←	←	←	←
Gear position indicator light		1.1	←	←	←	←	←	←	←	←	←	←	←	←

COUNTRY OR AREA

E-01 ..... General
E-02 ..... England
E-04 ..... France
E-15 ..... Finland
E-18 ..... Switzerland
E-21 ..... Belgium
E-22 ..... West Germany
E-24 ..... Australia
E-25 ..... The Netherlands
E-26 ..... Denmark
E-28 ..... Canada
E-30 ..... Singapore
E-34 ..... Italy

TORQUE TABLE

ENGINE

ITEM	N-m	kg-m	lb-ft
Cylinder head cover bolt	7 – 11	0.7 – 1.1	5.0 – 8.0
Cylinder head bolt	7 – 11	0.7 – 1.1	5.0 – 8.0
Cylinder head nut	23 – 27	2.3 – 2.7	16.5 – 19.5
Camshaft bearing cap bolt	8 – 12	0.8 – 1.2	6.0 – 8.5
Camshaft sprocket bolt	8 – 11	0.8 – 1.1	6.0 – 8.0
Contact breaker cam bolt	18 – 28	1.8 – 2.8	13.0 – 20.0
Cam chain tensioner lock nut	10 – 12	1.0 – 1.2	7.0 – 8.5
Generator rotor bolt	60 – 70	6.0 – 7.0	43.5 – 50.5
Advance governor bolt	18 – 23	1.8 – 2.3	13.0 – 16.5
Starter motor bolt	4 – 7	0.4 – 0.7	3.0 – 5.0
Starter clutch bolt	15 – 20	1.5 – 2.0	11.0 – 14.5
Clutch sleeve hub nut	40 – 60	4.0 – 6.0	29.0 – 43.5
Clutch spring bolt	6 – 10	0.6 – 1.0	4.5 – 7.0
Oil strainer screw	4 – 7	0.4 – 0.7	3.0 – 5.0
Gear shifting cam stopper spring holder bolt	18 – 28	1.8 – 2.8	13.0 – 20.0
Gear shift arm stopper bolt	15 – 23	1.5 – 2.3	11.0 – 16.5
Crankcase bolt (6 mm)	6 – 10	0.6 – 1.0	4.5 – 7.0
Crankcase bolt (8 mm)	18 – 22	1.8 – 2.2	13.0 – 16.0
Engine mounting nut (8 mm)	13 – 23	1.3 – 2.3	9.5 – 16.5
Engine mounting nut (10 mm)	25 – 45	2.5 – 4.5	18.0 – 32.5
Exhaust pipe bolt	9 – 14	0.9 – 1.4	6.5 – 10.0
Muffler bolt	18 – 28	1.8 – 2.8	13.0 – 20.0
Gear shift lever bolt	6 – 10	0.6 – 1.0	4.5 – 7.0
Engine sprocket nut	50 – 70	5.0 – 7.0	36.0 – 50.5

CHASSIS

ITEM	N·m	kg-m	lb-ft
Handlebar clamp bolt	12 – 20	1.2 – 2.0	8.5 – 14.5
Steering stem upper clamp bolt	15 – 25	1.5 – 2.5	11.0 – 18.0
Front fork upper bracket bolt (R, L)	20 – 30	2.0 – 3.0	14.5 – 21.5
Front fork lower bracket bolt (R, L)	20 – 30	2.0 – 3.0	14.5 – 21.5
Front fork cap bolt (R, L)	15 – 30	1.5 – 3.0	11.0 – 21.5
Steering stem head nut	36 – 52	3.6 – 5.2	26.0 – 37.5
Front fork axle holder nut	15 – 25	1.5 – 2.5	11.0 – 18.0
Front axle shaft nut	36 – 52	3.6 – 5.2	26.0 – 37.5
Swinging arm pivot nut	50 – 80	5.0 – 8.0	36.0 – 58.0
Rear torque link nut	20 – 30	2.0 – 3.0	14.5 – 21.5
Rear axle nut	50 – 80	5.0 – 8.0	36.0 – 58.0
Rear shock absorber nut	20 – 30	2.0 – 3.0	14.5 – 21.5
Footrest bolt	27 – 43	2.7 – 4.3	19.5 – 31.0
Front brake caliper mounting bolt	20 – 40	2.0 – 4.0	14.5 – 29.0
Front and rear brake disc plate bolt	15 – 25	1.5 – 2.5	11.0 – 18.0
Front brake caliper axle bolt	40 – 55	4.0 – 5.5	29.0 – 40.0
Front brake master cylinder mounting bolt	5 – 8	0.5 – 0.8	3.5 – 6.0
Front and rear brake hose union bolt	13 – 18	1.3 – 1.8	9.5 – 13.0
Front and rear brake air bleeder bolt	6 – 9	0.6 – 0.9	4.5 – 6.5
Rear brake caliper mounting bolt	20 – 30	2.0 – 3.0	14.5 – 21.5
Rear brake caliper axle bolt	25 – 35	2.5 – 3.5	18.0 – 25.5
Rear brake master cylinder mounting bolt	15 – 25	1.5 – 2.5	11.0 – 18.0

SPECIAL MATERIALS

The materials listed below are needed for maintenance work on the GS550 series, and should be kept on hand for ready use. They supplement such standard materials as cleaning fluids, lubricants, emery cloth and the like. How to use them and where to use them are described in the text of this manual.

Material	Part
 99000-32040 THREAD LOCK CEMENT	* Carburetor bracket screw . . . . . 8 pcs. * Oil filter cap nut . . . . . 3 pcs. * Front fork damper rod bolt . . . . . 2 pcs. * Cam shaft end cap screw . . . . . 8 pcs.
 99000-32050 THREAD LOCK "1342"	* Generator lead wire guide screw . . . . . 3 pcs. * Generator stator securing screw . . . . . 3 pcs. * Gearshift cam stopper bolt . . . . . 2 pcs. * Countershaft bearing retainer . . . . . 4 pcs. * Starter motor securing bolt . . . . . 2 pcs. * Gearshift fork shaft stopper screw . . . . . 1 pc. * Engine oil pump set screw . . . . . 4 pcs.
 99000-32020 THREAD LOCK SUPER "1333B"	* Gearshift cam retainer screw . . . . . 1 pc. * Cam chain sprocket allen bolt . . . . . 2 pcs. * Cam chain guide bolt . . . . . 1 pc. * Starter clutch allen bolt . . . . . 3 pcs. * Gearshift stopper . . . . . 1 pc. * Muffler cover screw . . . . . 4 pcs.
 99000-32090 THREAD LOCK SUPER "1332B"	* Generator rotor securing bolt . . . . . 1 pc.

Material	Part
 99000-25010 SUZUKI SUPER GREASE "A"	• Oil seals • Throttle grip • Cables (speedometer and tachometer) • Clutch release mechanism • Gearshift lever linkage and shaft • Speedometer gearbox • Wheel bearings • Swinging arm bearing and dust seal • Rear brake cam • Brake pedal shaft • Contact points cam • Governor link • Centerstand spacer • Steering stem bearings
 99000-31110 SUZUKI BOND No. 1215	• Mating surfaces of upper and lower crankcase.
 99000-25100 SUZUKI SILICONE GREASE	• Apply to caliper axle bolt
 99000-23021 SUZUKI BRAKE FLUID	• Brake fluid
 99000-25140 SUZUKI MOLY PASTE	• Valve stem • Cam shaft • Chain tensioner adjuster shaft

MODIFICATIONS

ENGINE

- On the engine starter system, the combines electric and kick starter system has been replaced by the electric starter system; that is, the kick starter system is discontinued. As a result, generator has been replaced by high performance type.

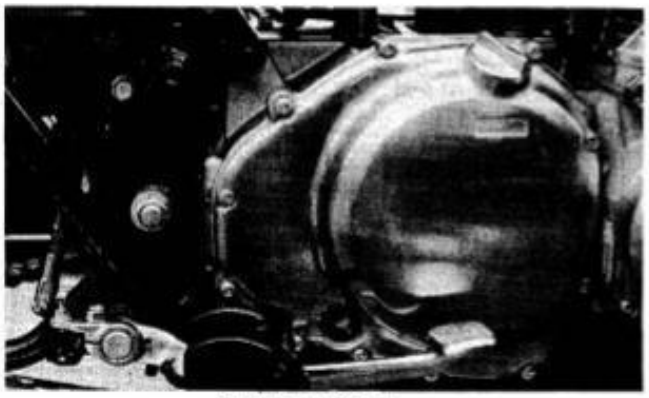

GS550T MODEL

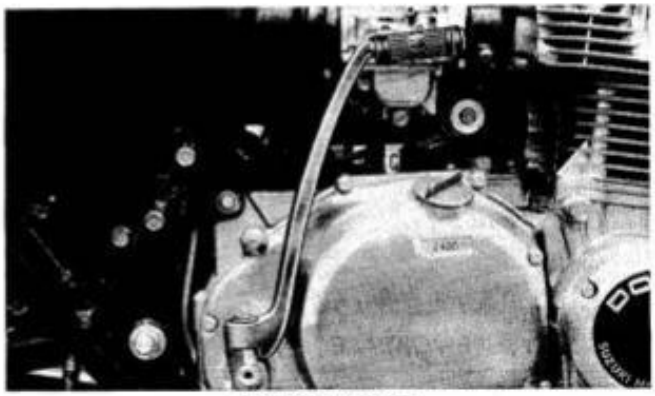

GS550N MODEL

- No. 2 and No. 3 exhaust pipes are connected.

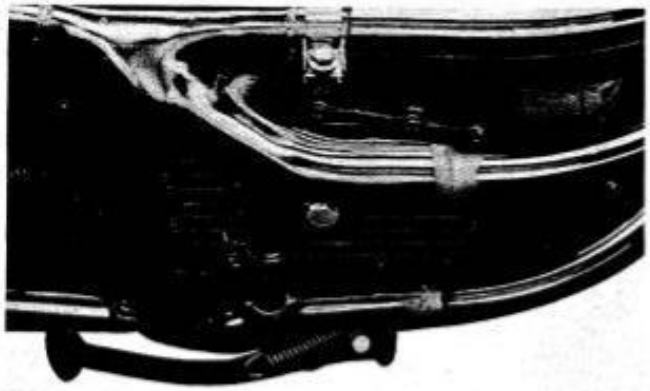

GS550T MODEL

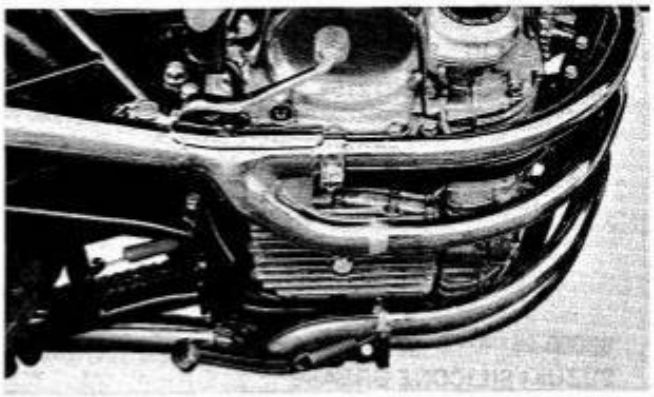

GS550N MODEL

FUEL SYSTEM

- The carburetor has been changed from MIKUNI VM22SS to MIKUNI BS32SS.

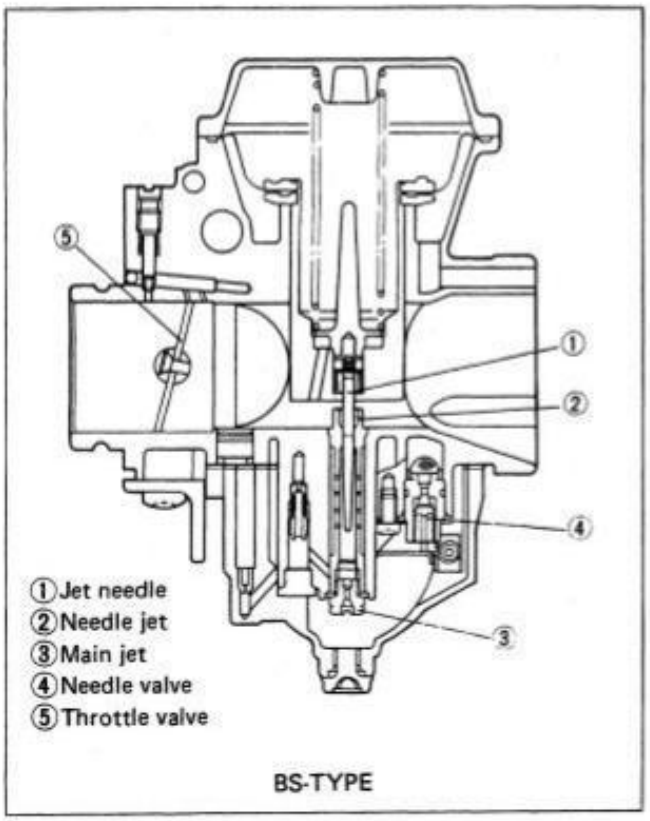

GS550T MODEL

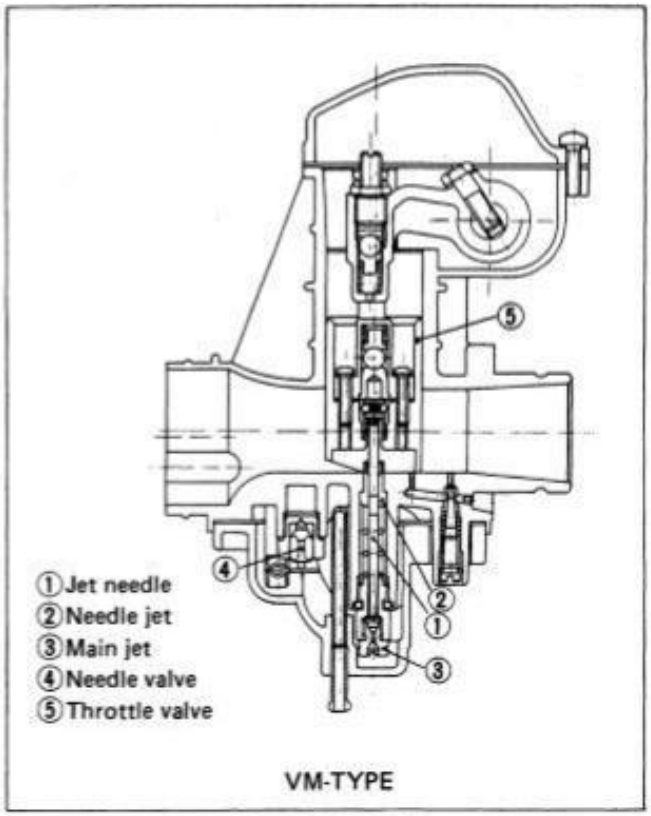

GS550N MODEL

- The carburetor choke system has been changed from lever to knob.

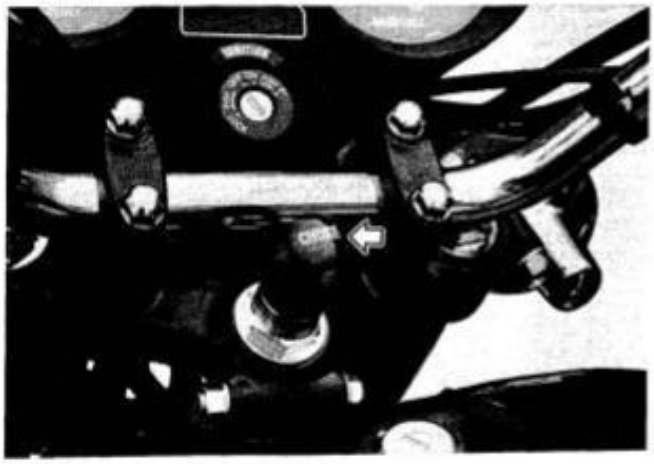

GS550T MODEL

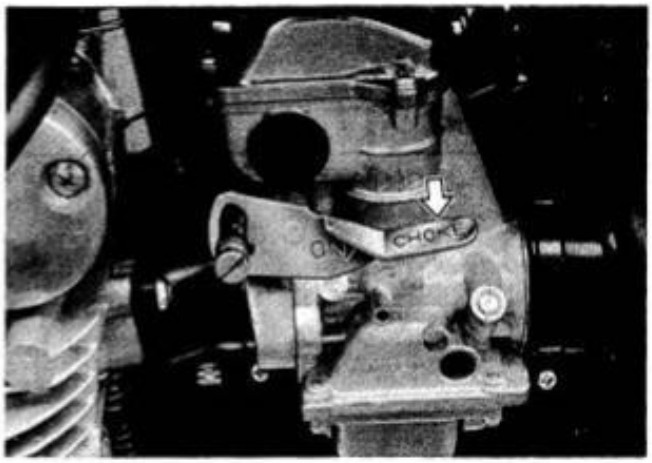

GS550N MODEL

- Fuelcock has been changed as shown below.

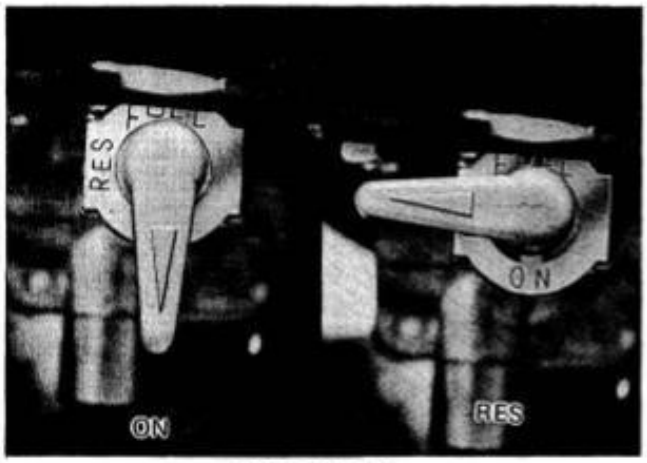

GS550T MODEL

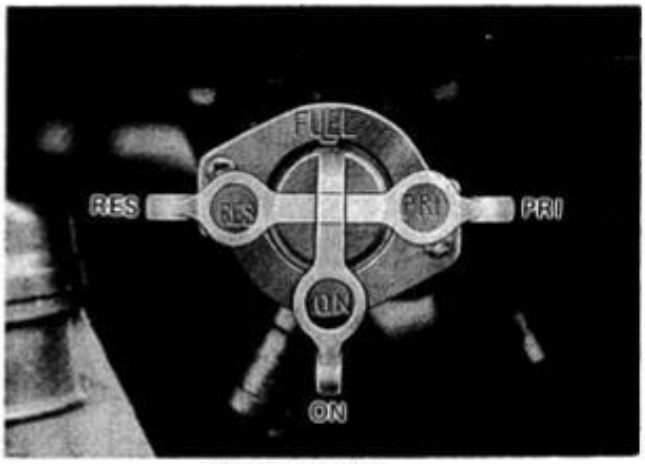

GS550N MODEL

ELECTRICAL

- Charging system has been changed as shown below.

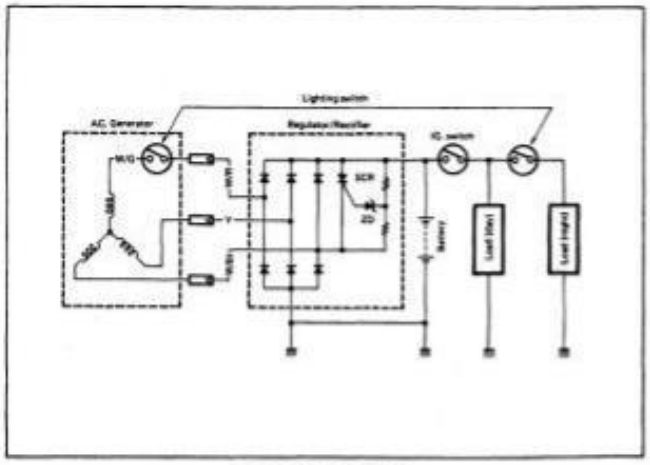

GS550T MODEL

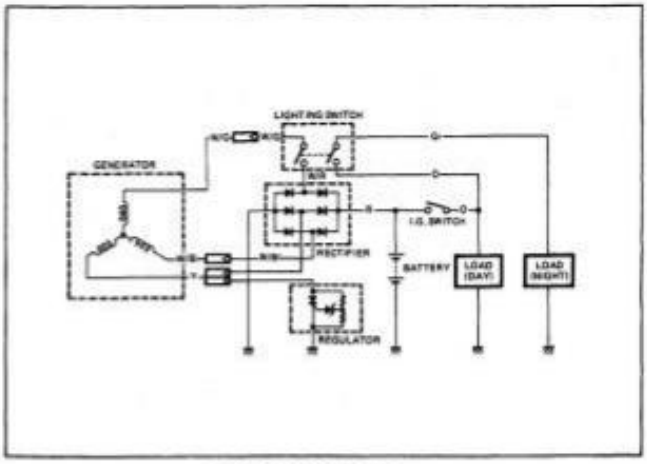

GS550N MODEL

- The right and left handlebar switches have been changed to a multiple type as shown below:

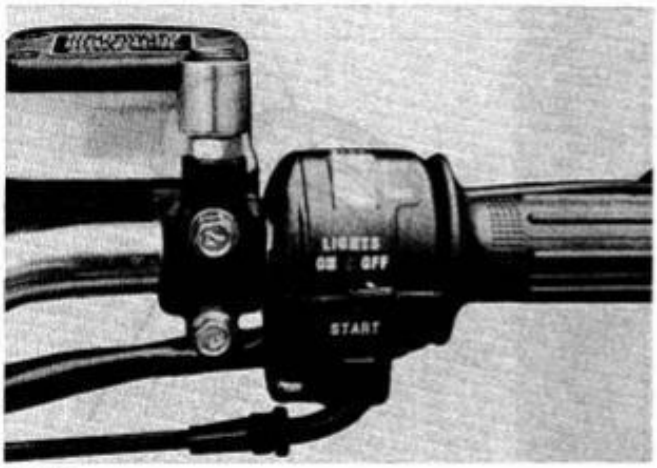

Right

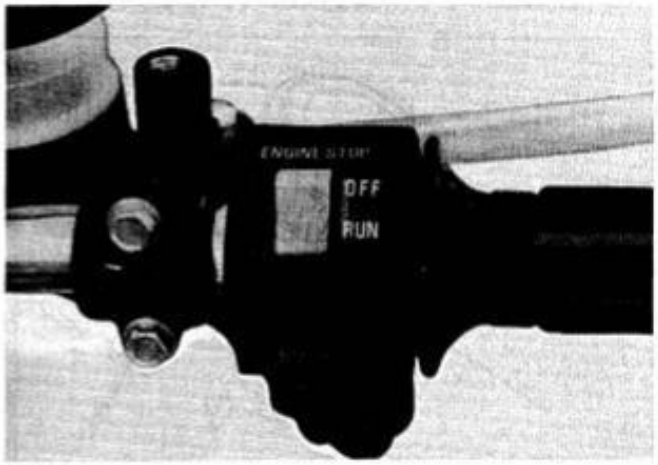

Right

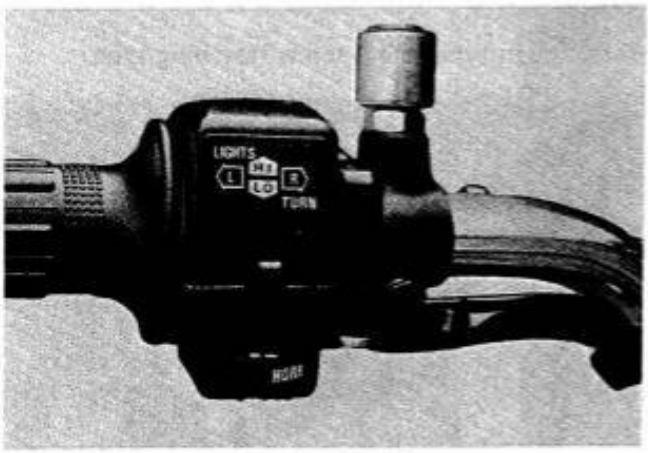

Left GS550T MODEL

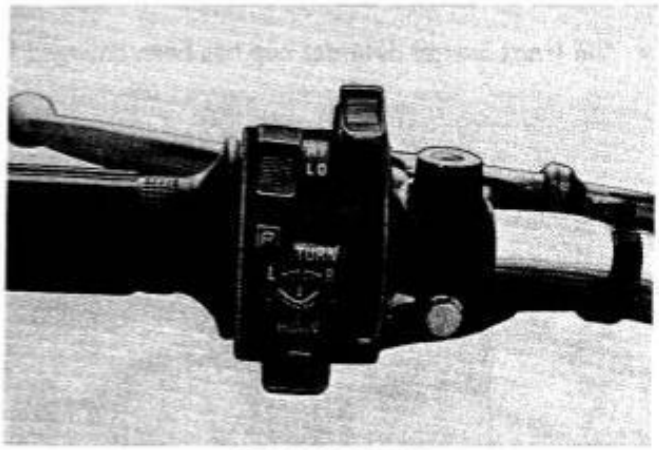

Left GS550N MODEL

- The ignition system has been changed from the battery ignition system to the maintenance-free transistorized ignition system.
  (Only for Canada)

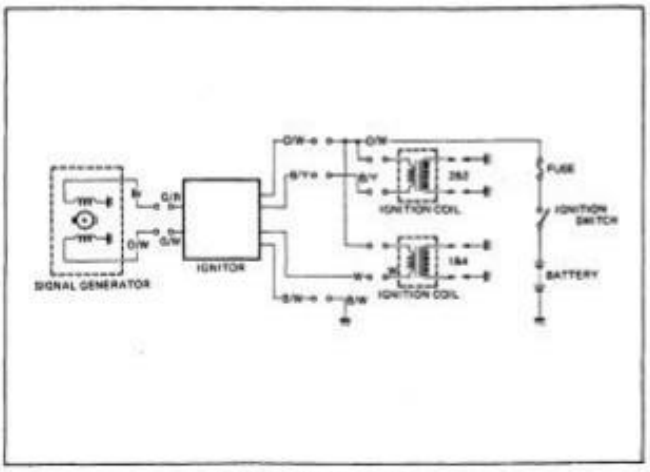

GS550T MODEL

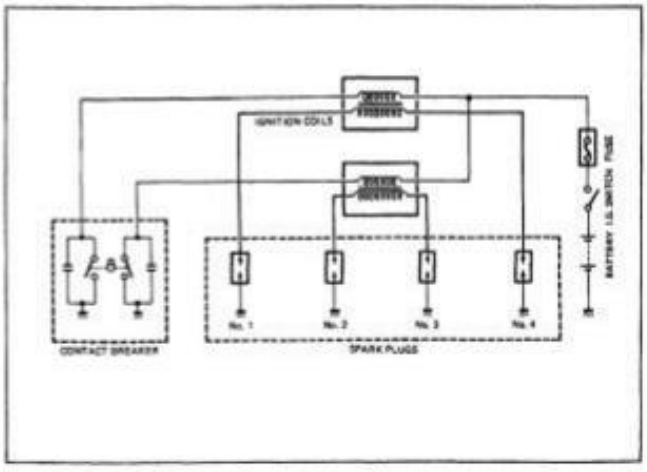

GS550N MODEL

CHASSIS

- Steering stem bearing has been changed from steel ball type to taper roller bearing type.

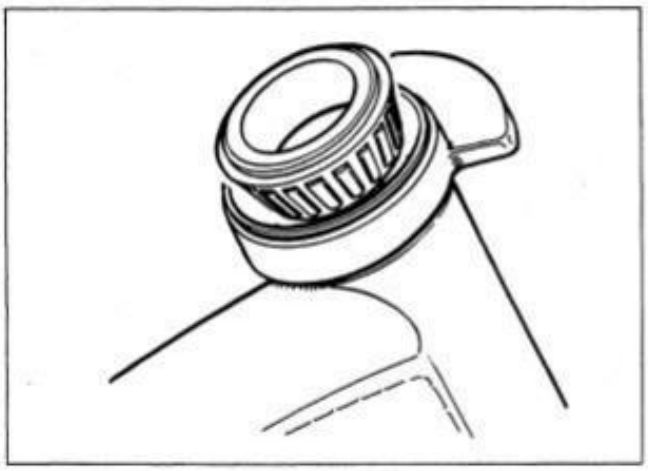

GS550T MODEL

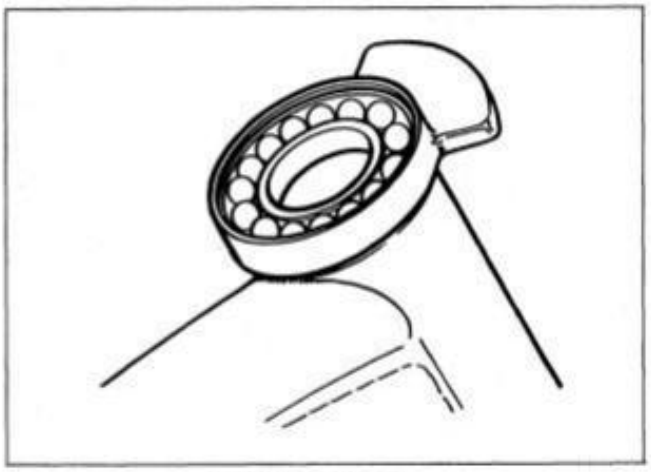

GS550N MODEL

- The front master cylinder cap has been changed from a screwing-in type to a 4-screw fastening type.

GS550T MODEL

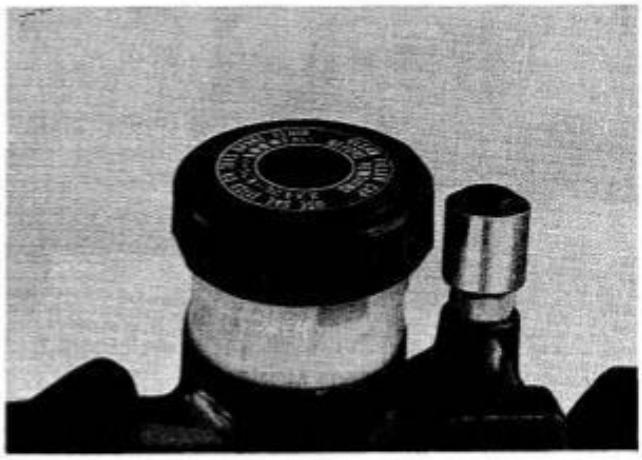

GS550N MODEL

- Front brake caliper has been changed as shown below.

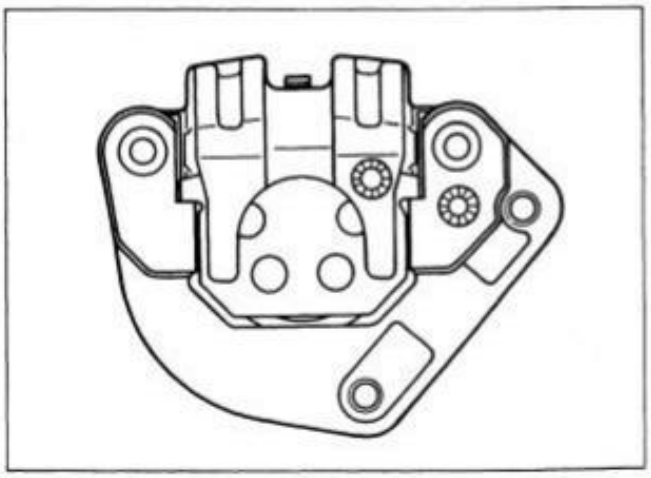

GS550T MODEL

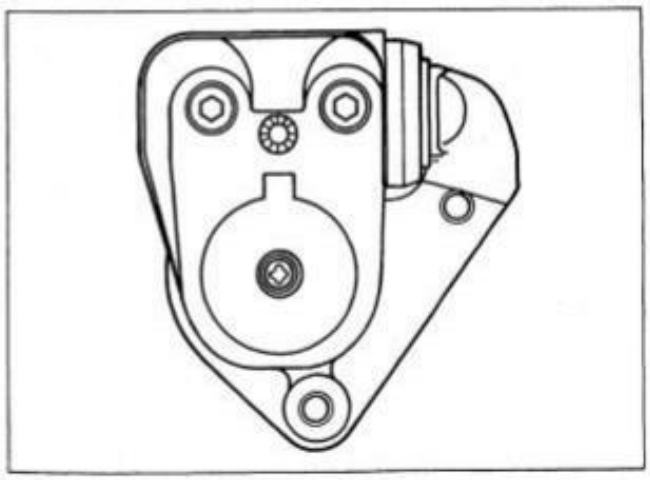

GS550N MODEL

FUEL SYSTEM

When turning starter motor, negative pressure is generated in the combustion chamber. This negative pressure works on the diaphragm of fuel cock through passageway provided in the carburetor main bore and vacuum pipe, and diaphragm builds up a negative pressure which is higher than the spring pressure. Fuel valve is forced to open due to diaphragm operation, and thus allow fuel to flow into carburetor float chamber.

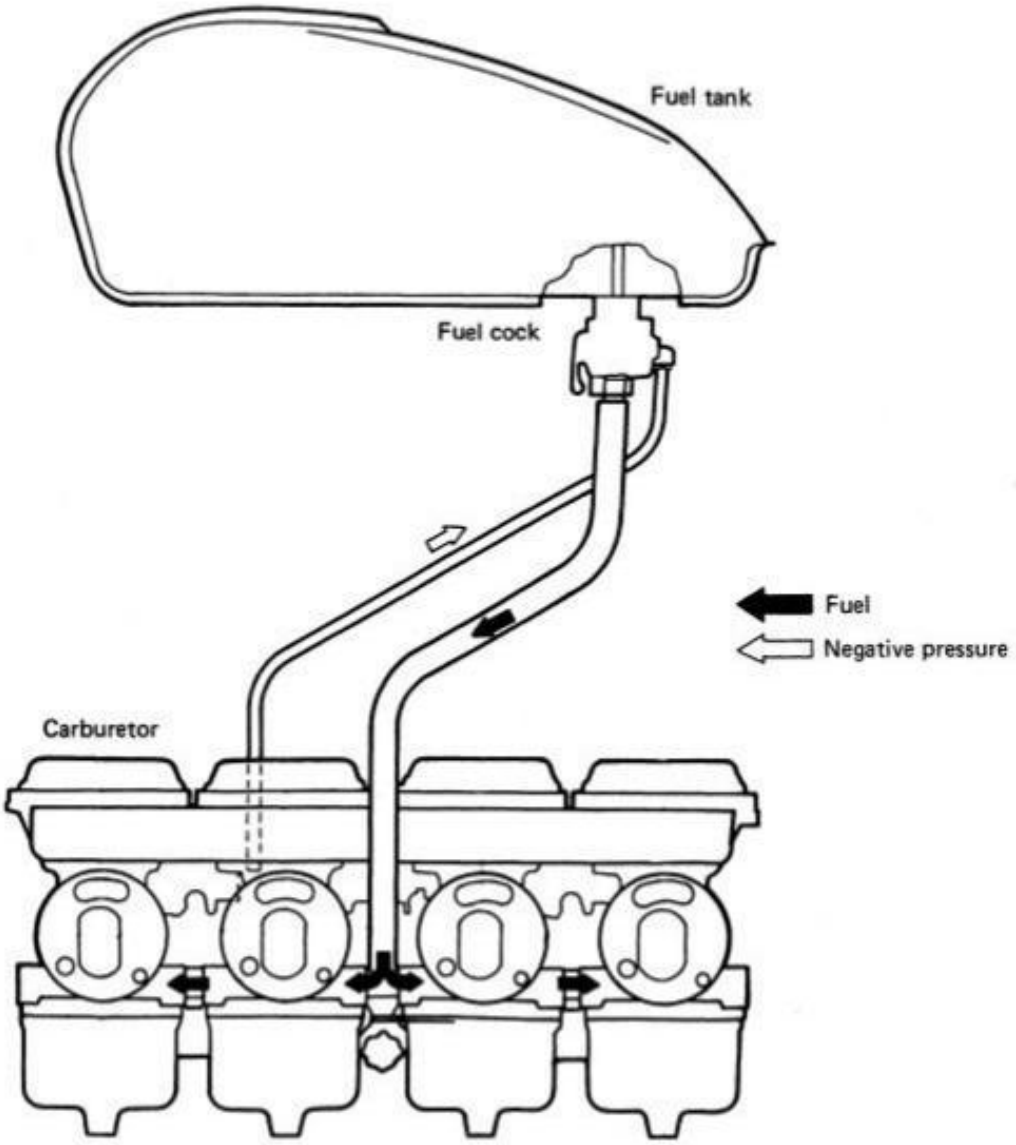

CARBURETOR

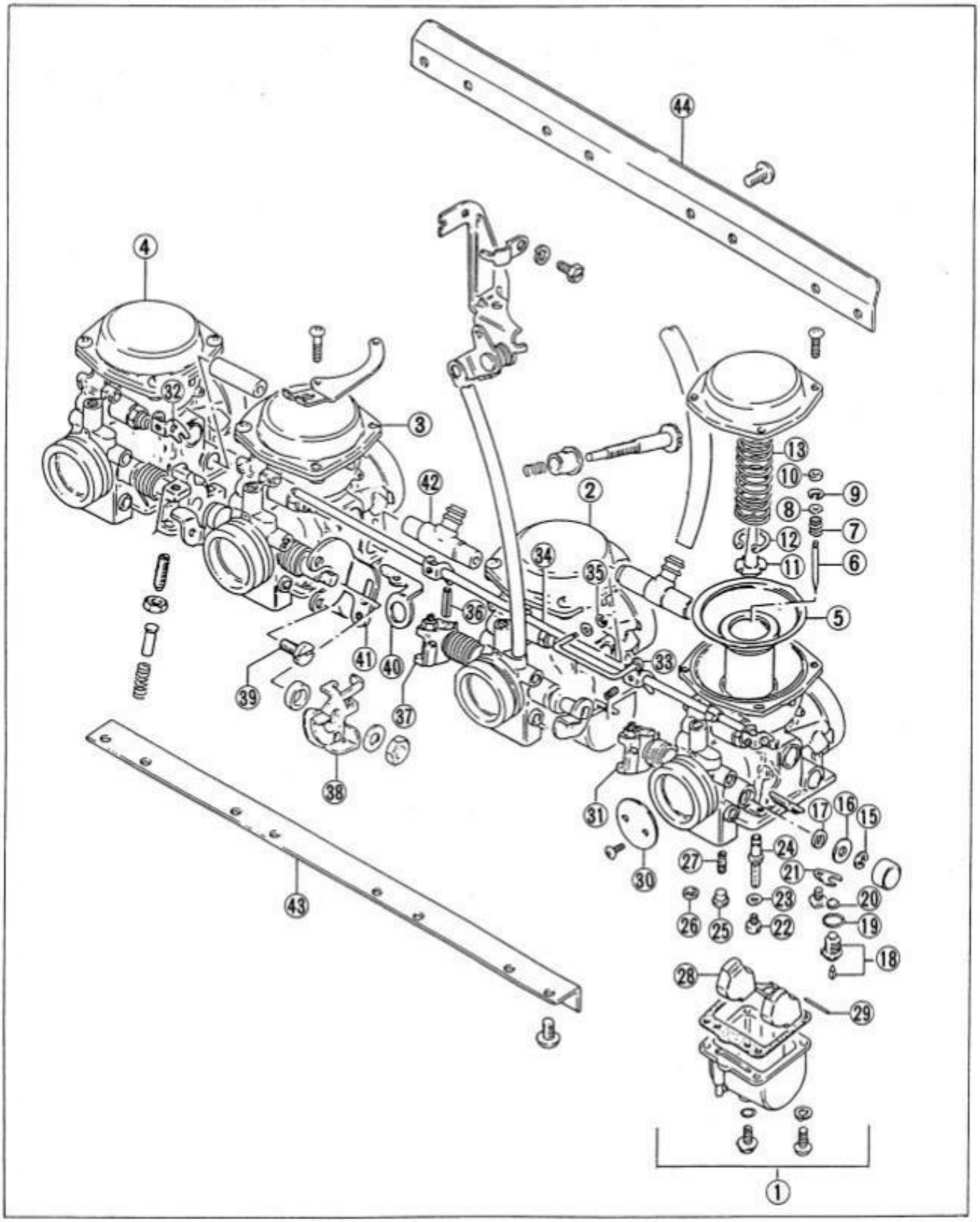
44
4
32
3
42
2
13
10
9
8
7
12
11
6
34
35
5
36
41
40
33
39
37
38
31
17
16
15
24
27
21
30
23
20
26
25
22
19
18
28
29
43
1

① Carburetor, No. 1
② Carburetor, No. 2
③ Carburetor, No. 3
④ Carburetor, No. 4
⑤ Diaphragm
⑥ Jet Needle
⑦ Spring
⑧ Washer
⑨ E ring
⑩ Ring
⑪ Guide holder
⑫ Clip
⑬ Spring
⑮ E ring
⑯ Gasket
⑰ Seal
⑱ Needle valve
⑲ O ring
⑳ Filter
㉑ Plate
㉒ Main jet
㉓ Washer
㉔ Needle jet
㉕ Plug
㉖ Gasket
㉗ Pilot jet
㉘ Float
㉙ Pin
㉚ Throttle valve
㉛ Shaft
㉜ Lever
㉝ Lever
㉞ Starter shaft
㉟ E ring
㊱ Pin
㊲ Lever
㊳ Lever
㊴ Screw
㊵ Bracket
㊶ Bracket
㊷ Nipple
㊸ Plate
㊹ Plate

SPECIFICATIONS

Item	Specification	Item	Specification
Type	MIKUNI BS32SS	Needle jet (N.J.)	X–6
Bore size	32 mm (1.26 in)	Pilot jet (P.J.)	#40
I.D. No.	47090	By pass (B.P.)	1.0, 0.8, 0.8
Idle r/min	1 100 ± 100 r/min	Pilot outlet (P.O.)	0.7
Fuel level	5.0 ± 0.5 mm (0.20 ± 0.02 in)	Valve seat (V.S.)	2.0
Float height	22.4 ± 1.0 mm (0.88 ± 0.04 in)	Starter jet (G.S.)	#35
Main jet (M.J.)	#92.5	Pilot screw (P.S.)	3½ turns back
Main air jet (M.A.J.)	1.6		
Jet needle (J.N.)	5F42-3		

FUEL COCK

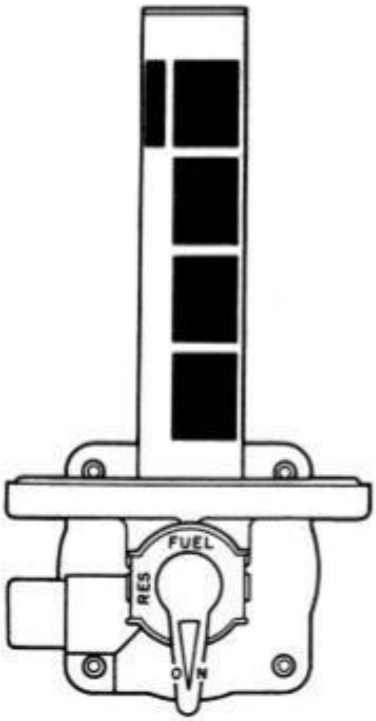

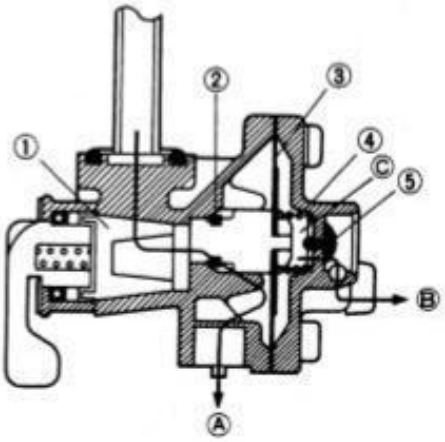

① Fuel valve ② O-ring ③ Diaphragm
④ Spring ⑤ One way valve
Ⓐ Fuel flow Ⓑ Vacuum Ⓒ Chamber

When the engine is not running with the lever in the ON or RES position, the valve is kept in the closed position by applying pressure utilizing a spring so that no fuel will flow to the carburetors. When the engine is engaged, a negative pressure is generated in the diaphragm chamber "C" through the vacuum (negative pressure) pipe which is connected to the carburetor, and builds up a negative pressure which is higher than the spring pressure so that the diaphragm is forced to open the valve and thus allows the fuel to flow to the carburetors.

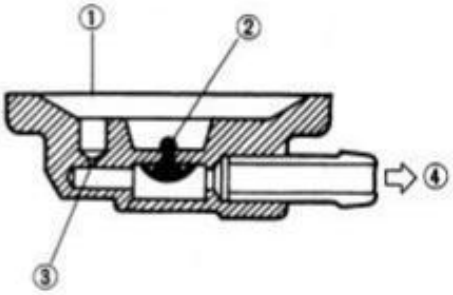

① Diaphragm ② One way valve
③ Air return orifice ④ Vacuum

DIAPHRAGM AND PISTON OPERATION

The carburetor is of a variable-venturi type, whose venturi cross section area is increased or decreased automatically by the piston according to the vacuum present on the downstream side of the venturi. Vacuum is admitted into the diaphragm chamber through an orifice provided in the piston.

Rising vacuum overcomes the spring force, causing the piston to rise to increase the said area and thus prevent the air velocity from increasing. Thus, air velocity in the venturi passage is kept relatively constant for improved fuel atomization and for securing an optimum ratio of fuel to air in the mixture.

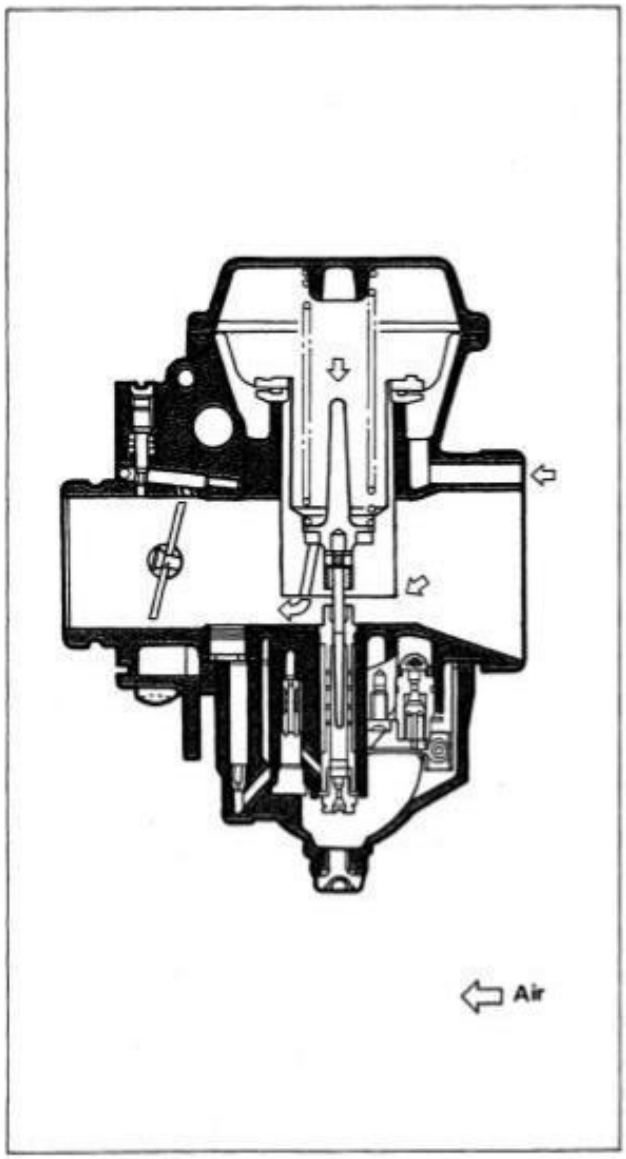

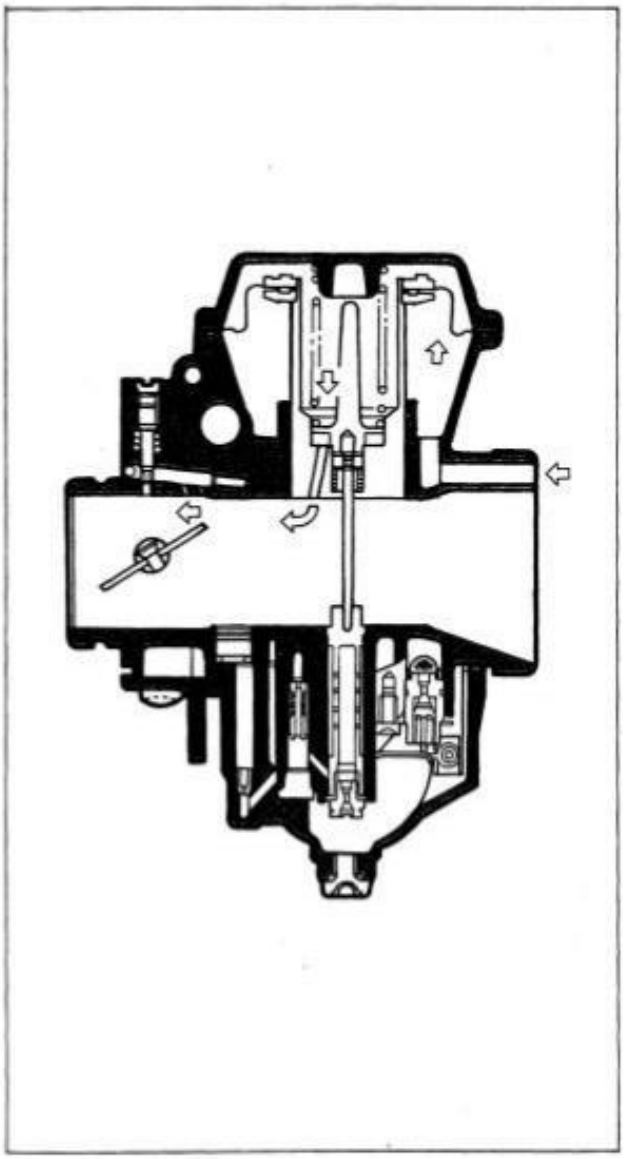

SLOW SYSTEM

This system supplies fuel during engine operation with throttle valve closed or slight opened.
The fuel from float chamber is first passed through main jet and metered by pilot jet where it mixes with air coming in through pilot air jet.
This mixture, rich with fuel, then goes up through pilot pipe to pilot screw. A part of the mixture is discharged into the main bore out of bypass ports. The remainder is then metered by pilot screw and sprayed out into the main bore through pilot outlet.

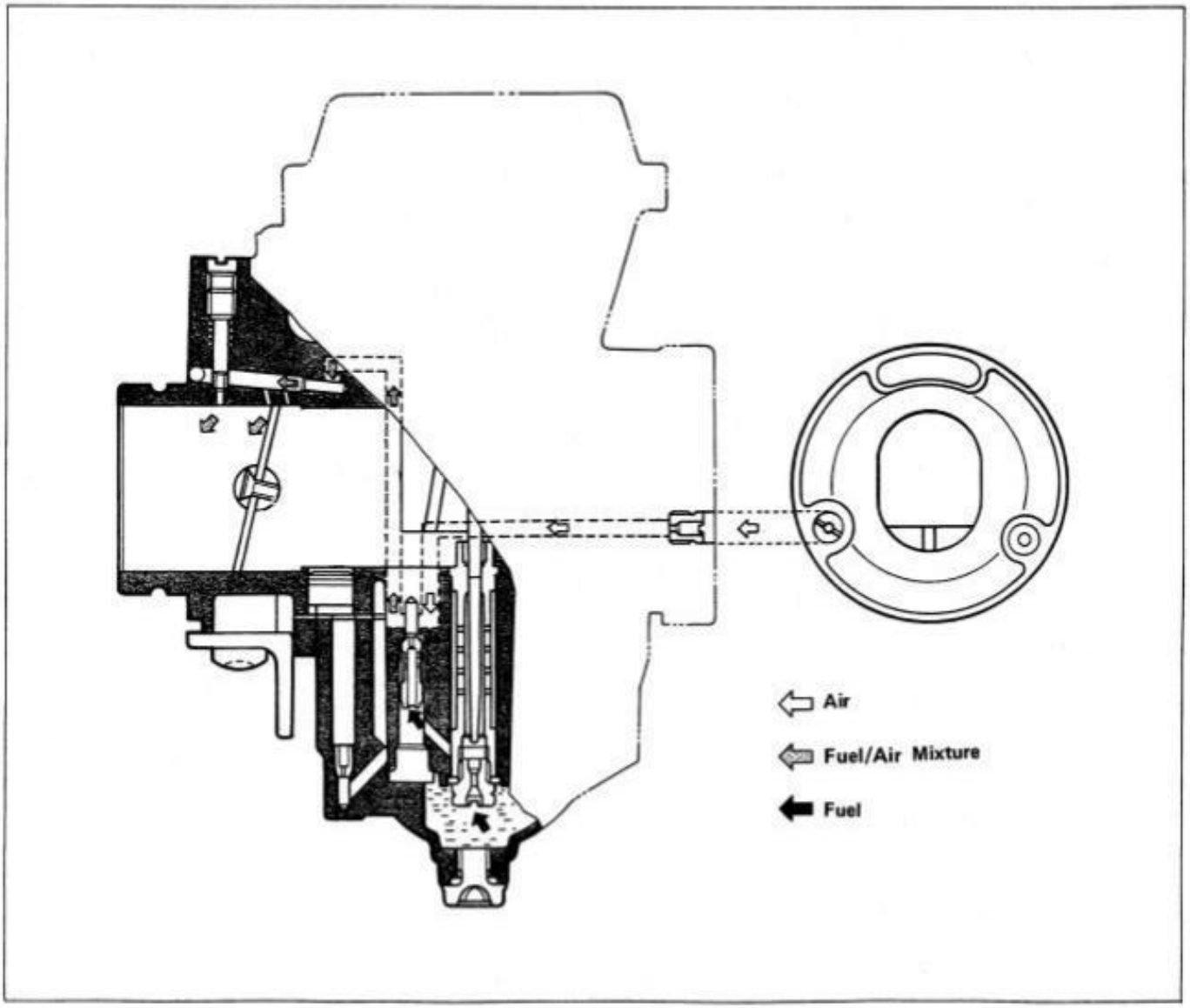

MAIN SYSTEM

As throttle valve is opened, engine speed rises, and this increases vacuum in the venturi. Consequently the piston valve moves upward.

Meanwhile, the fuel in float chamber is metered by main jet, and the metered fuel enters needle jet, in which it mixes with the air admitted through main air jet to form an emulsion.

The emulsified fuel then passes through the clearance between needle jet and jet needle, and is discharged into the venturi, in which it meets main air stream being drawn by the engine.

Mixture proportioning is accomplished in needle jet; the clearance through which the emulsified fuel must flow is large or small, depending ultimately on throttle position.

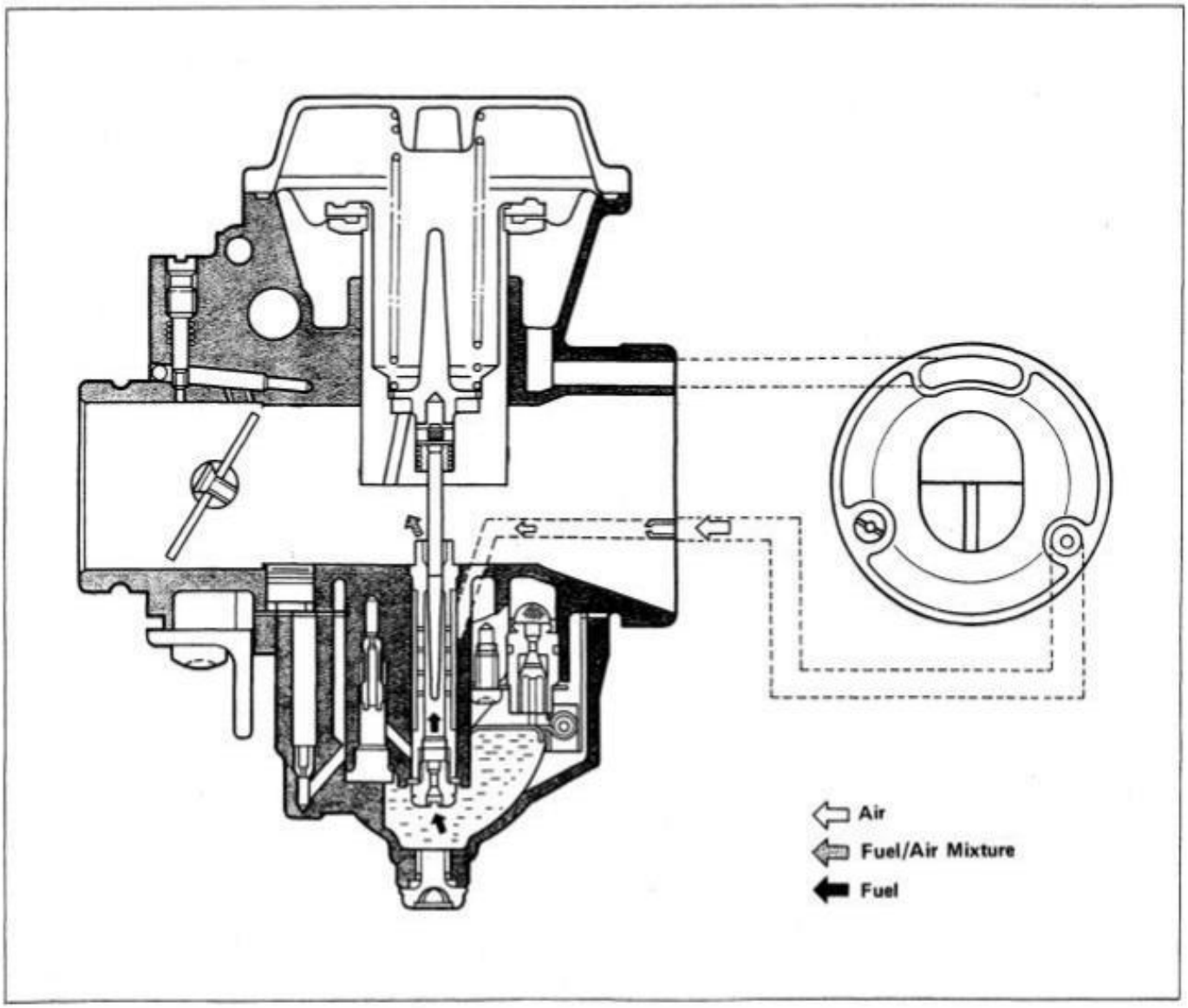

STARTER SYSTEM

Pulling up the choke knob slides starting plunger to draw fuel into the starter circuit from the float chamber through starter jet.

Starter jet meters this fuel, which then flows into starter pipe and mixes with the air coming from the float chamber. The mixture, rich in fuel content, reaches starting plunger and mixes again with the air coming through a passage extending from behind the diaphragm.

The two successive mixings of fuel with air are such that a proper air/fuel mixture for starting is produced when the mixture is sprayed out through starter outlet into the main bore.

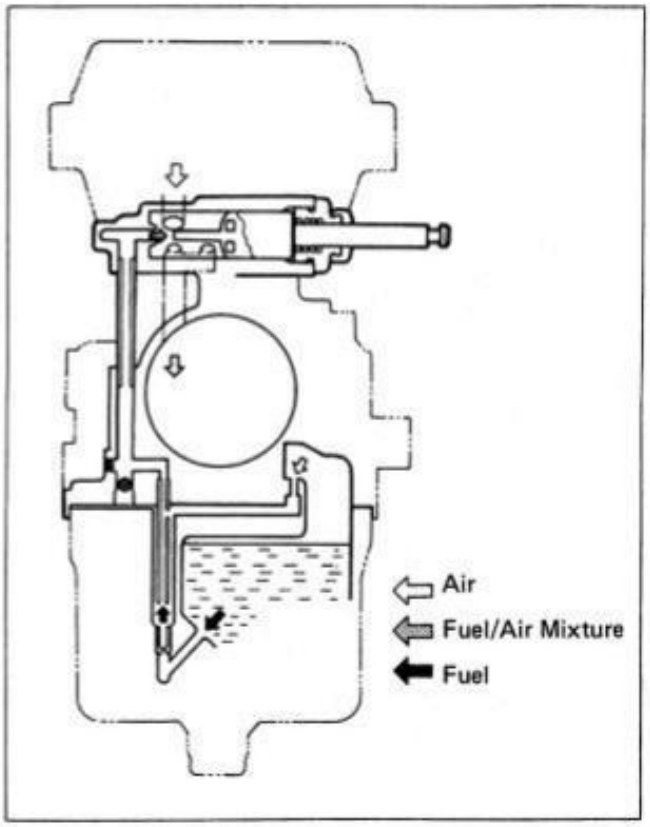

FLOAT SYSTEM

Floats and needle valve are associated with the same mechanism, so that, as the floats move up and down, the needle valve too moves likewise. When fuel level is up in float chamber, floats are up and needle valve remains pushed up against valve seat. Under this condition, no fuel enters the float chamber.

As the fuel level falls, floats go down and needle valve unseats itself to admit fuel into the chamber. In this manner, needle valve admits and shuts off fuel alternately to maintain a practically constant fuel level inside the float chamber.

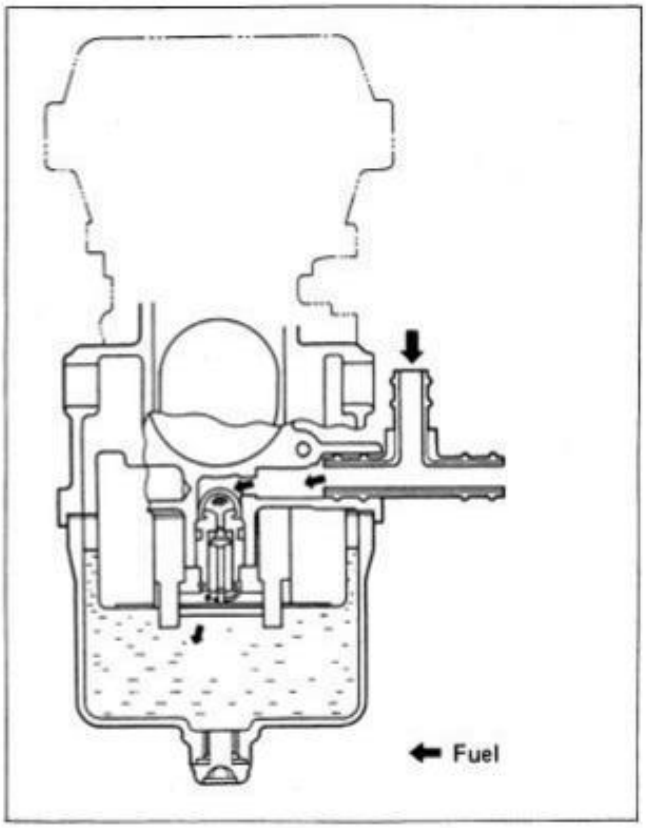

DISASSEMBLY

- Remove two throttle bracket screws ① and starter bracket screw ②, and remove brackets.

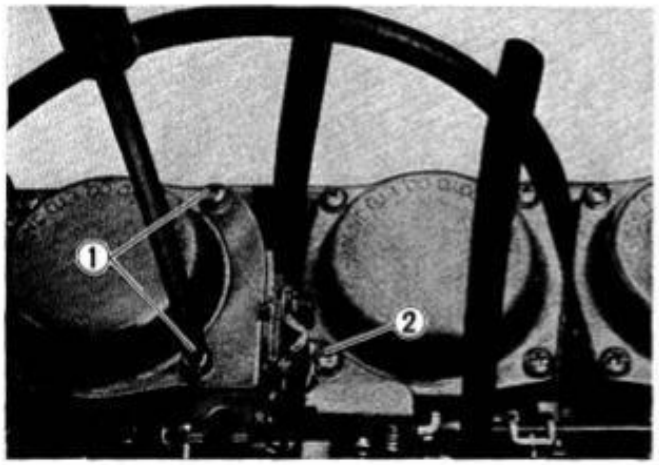

- Loosen four screws, and remove starter shaft ③, three levers ④ and starter bracket and lever ⑤.

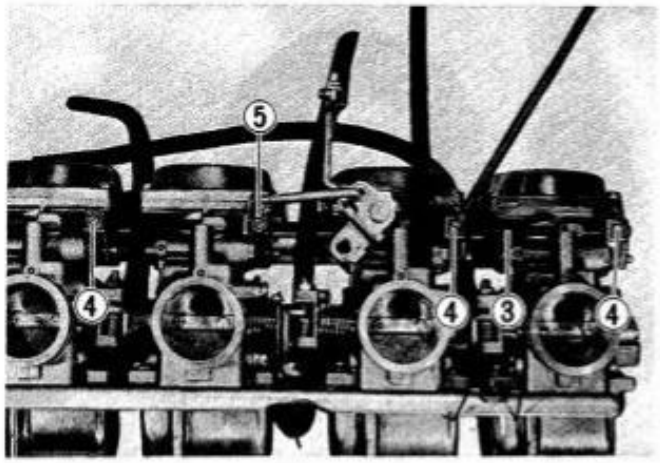

- Remove eight screws and remove the plate.

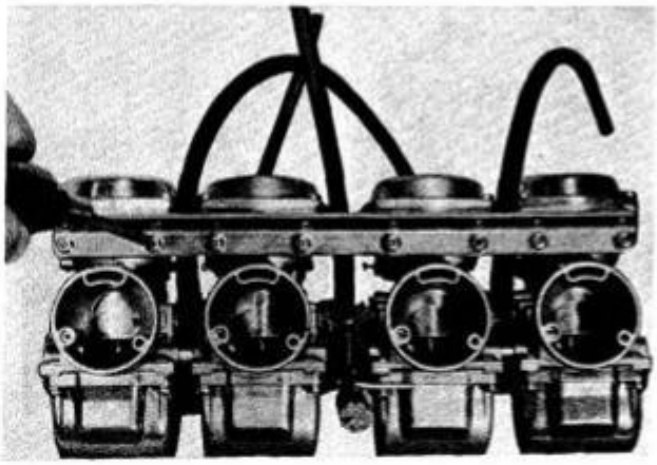

- Remove eight screws and remove the plate.

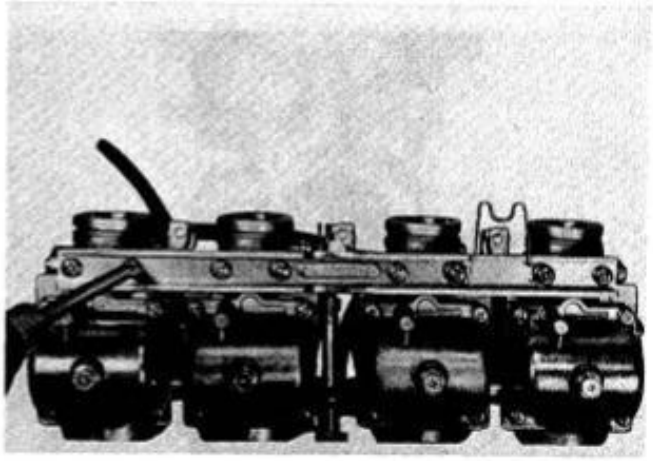

- Separate four carburetors, remove nut ⑥ and remove adjuster lever.

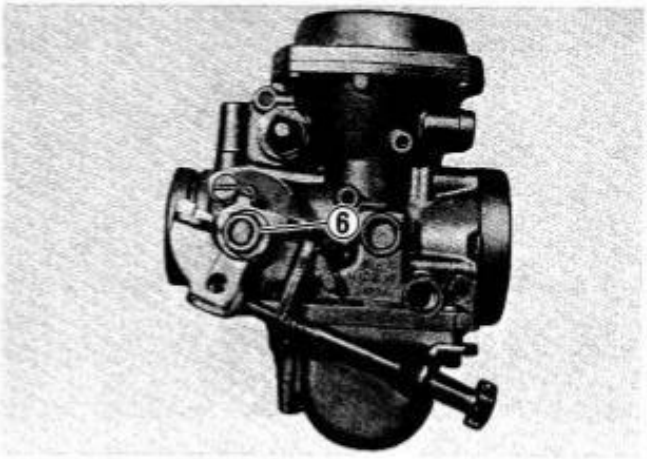

- Remove three screws, and remove adjuster bracket.

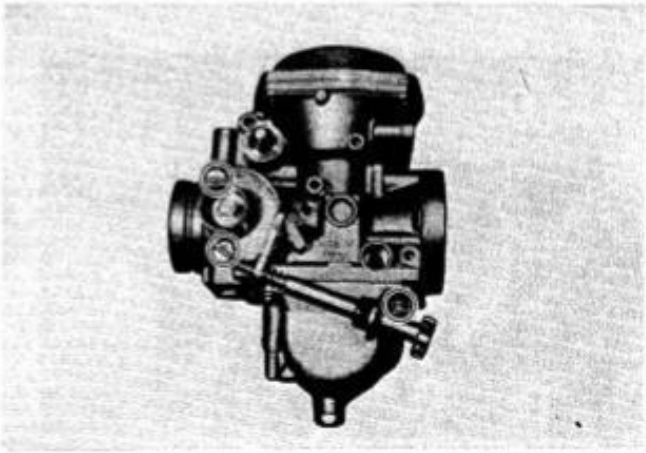

- Remove two throttle valve screws ① and pull out the throttle valve by turning throttle valve shaft.

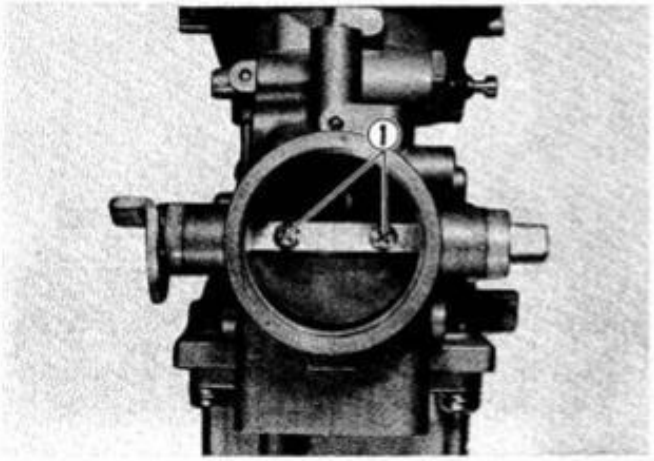

- Remove four screws and remove float chamber.

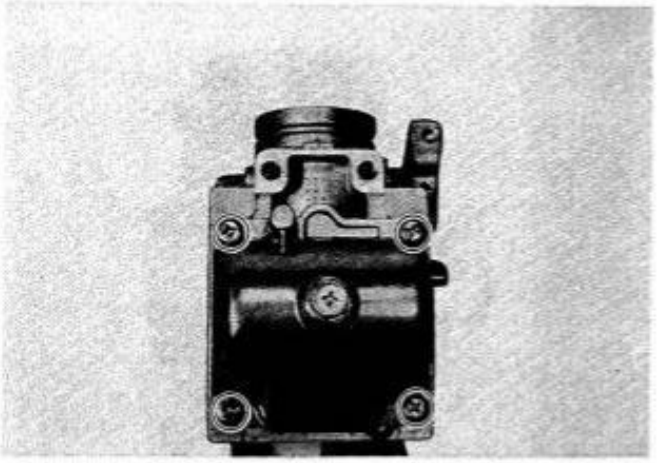

- Remove float ②, pilot jet ③ and main jet ④.

NOTE: Do not fall dawn the O-ring ⑤.

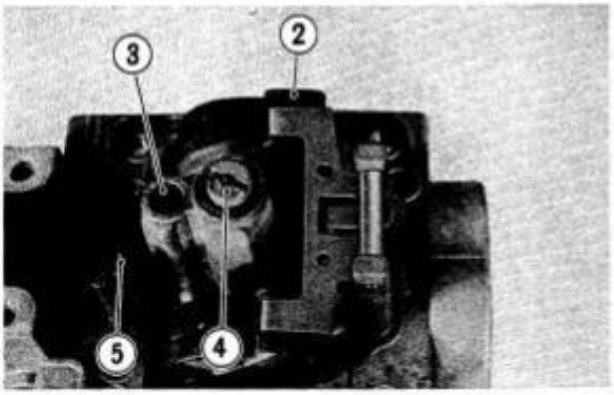

- Remove four screws and remove carburetor cap.

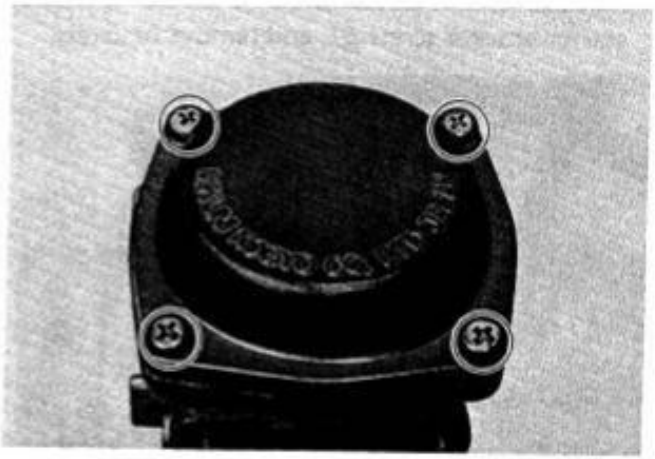

- Remove circlip ⑥ from piston.

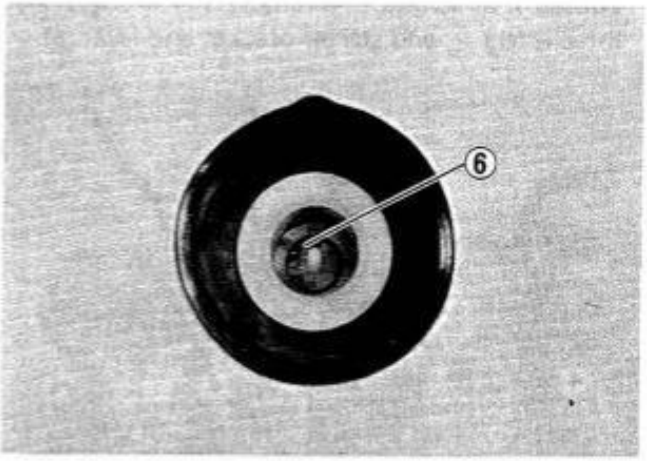

- Remove needle jet ⑦ from the top side.
- Remove starter valve.

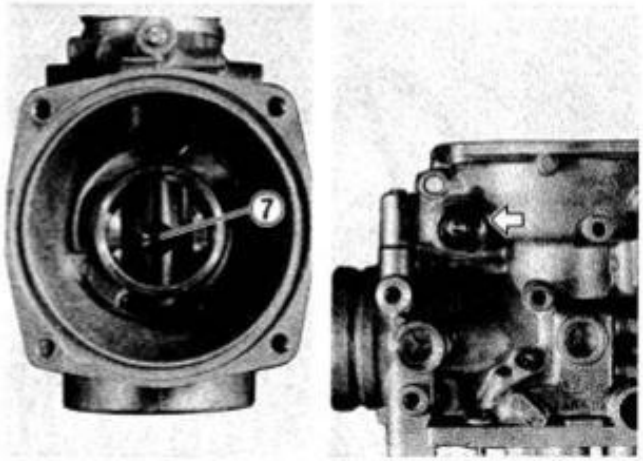

INSPECTION

FLOAT HEIGHT ADJUSTMENT

To check the float height, invert the carburetor body. With the float arm kept free, measure the height Ⓐ while float arm is just in contact with needle valve by using the caliper. Bend the tongue ① as necessary to bring the height Ⓐ to this value.

Float height Ⓐ	22.4 ± 1.0 mm (0.88 ± 0.04 in)

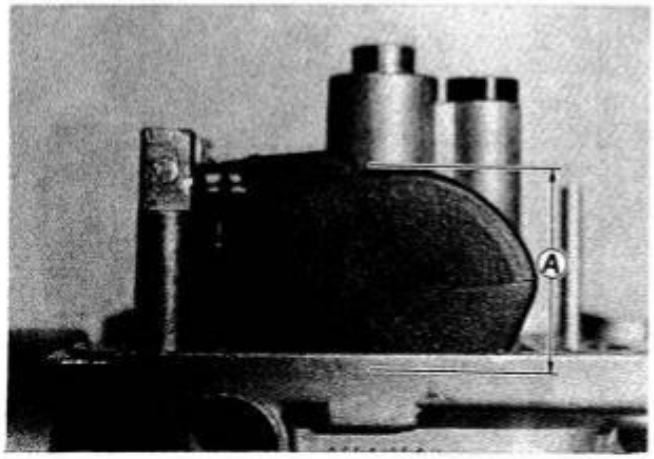

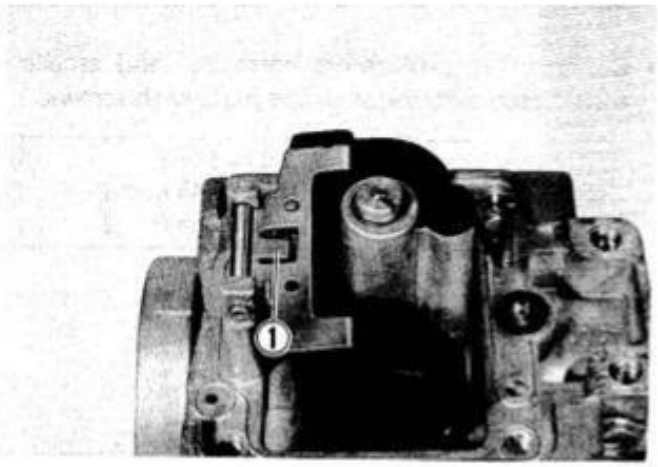

NOTE: Be sure to remove the gasket before measuring the height.

NEEDLE VALVE

If foreign matter is caught between the valve seat and the needle, the gasoline will continue flowing and cause it to overflow. If the seat and needle are worn out beyond the permissible limits, similar trouble will occur. Conversely, if the needle sticks, the gasoline will not flow into the float chamber.

Remove the carburetor, float chamber and floats, and clean the float chamber and float parts with gasoline. If the needle is worn as shown below, replace it together with a valve seat. Clean the fuel passage of the mixing chamber with compressed air.

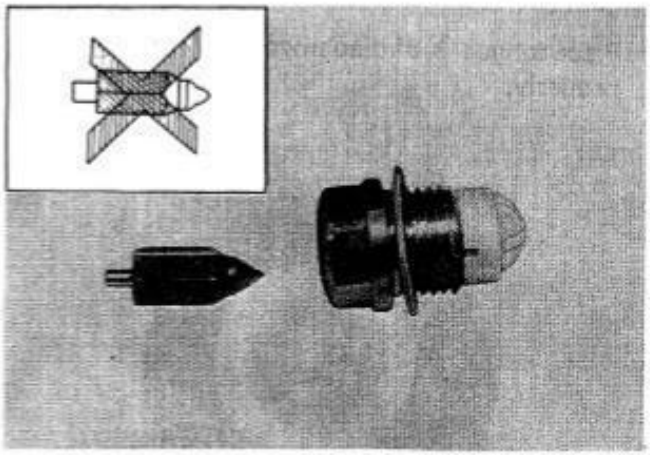

- Check following items for any damage or clogging.
  - Pilot jet
  - Main jet
  - Main air jet
  - Pilot air jet
  - Needle jet air bleeding hole and O-ring
  - Float
  - Needle valve mesh
  - Diaphragm
  - Gasket
  - Throttle valve shaft oil seals
  - Drain plug O-ring
  - Pilot outlet and bypass holes

REASSEMBLY

- Align the groove ① of the needle jet with the pin ② and replace it.

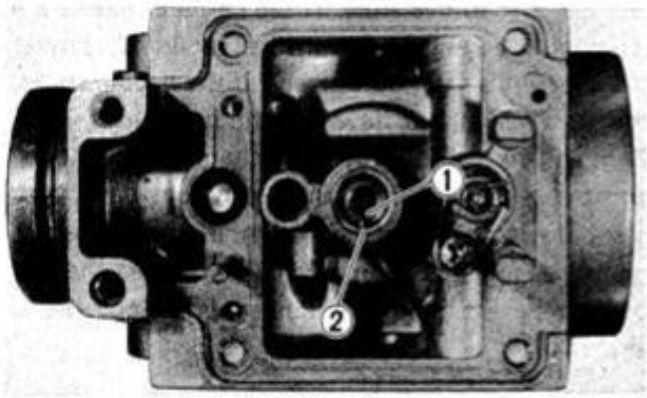

- Place tongue ③ of diaphragm to carburetor body properly.

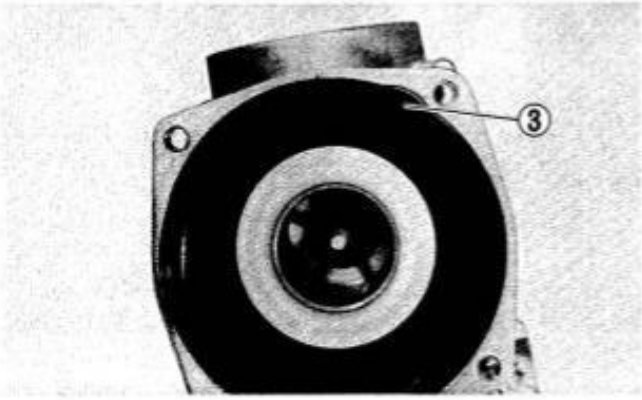

- Secure carburetor cap and float chamber with screws.

Tightening torque	2.5 - 4.5 N·m [0.25 - 0.45 kg-m 1.8 - 3.0 lb-ft]

- When fitting throttle valve shaft oil seals, groove should be faced outside.

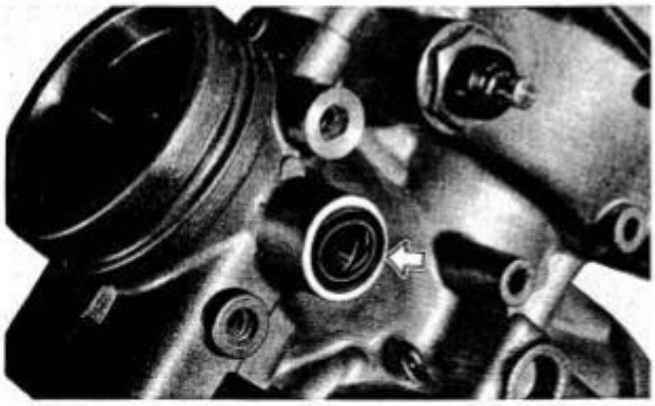

- Secure adjuster bracket to No. 3 carburetor with two screws.
  Before tightening the screws, coat them with THREAD LOCK CEMENT.

Thread lock cement	99000-32040

Tightening torque	2.5 - 4.5 N·m [0.25 - 0.45 kg-m 1.8 - 3.0 lb-ft]

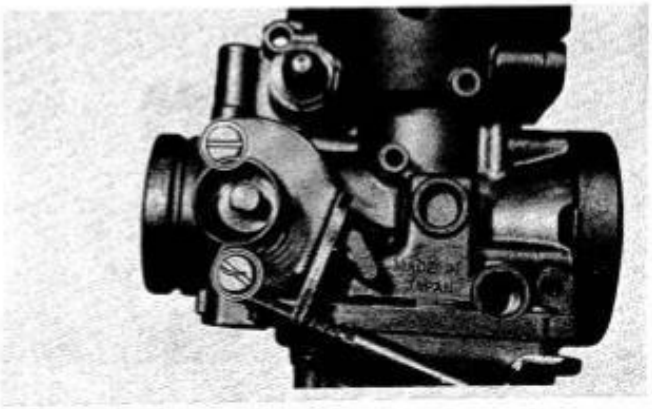

- Secure adjuster lever with nut.

- Connect the carburetors correctly, and secure top of each carburetor to the plate with screws.

Tightening torque	2.5 - 4.5 N·m [0.25 - 0.45 kg-m 1.8 - 3.0 lb-ft]

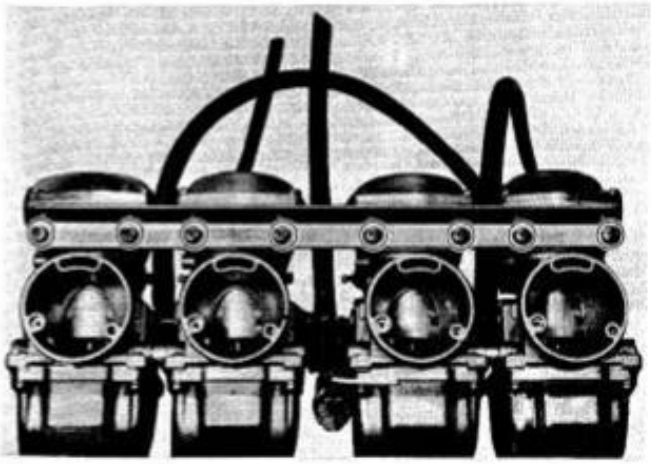

- Secure bottom of each carburetors to the plate with screws. Before tightening the screws, coat it with THREAD LOCK CEMENT.

Thread lock cement	99000-32040

Tightening torque	4.0 - 6.0 N·m [0.4 - 0.6 kg-m 3.0 - 4.5 lb-ft]

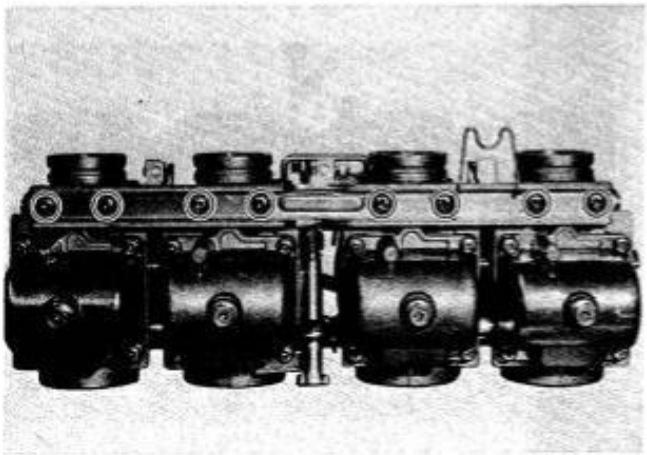

CAUTION: Make sure that each throttle shaft lever is installed as shown in photo.

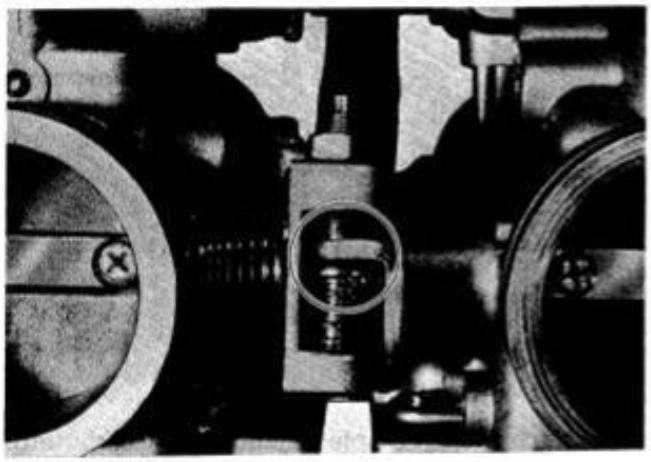

- Pass starter shaft through carburetors and starter levers, and secure starter lever with screws. Before tightening the screws, coat it with THREAD LOCK CEMENT.

CAUTION: Align the end of screw with recess in starter shaft.

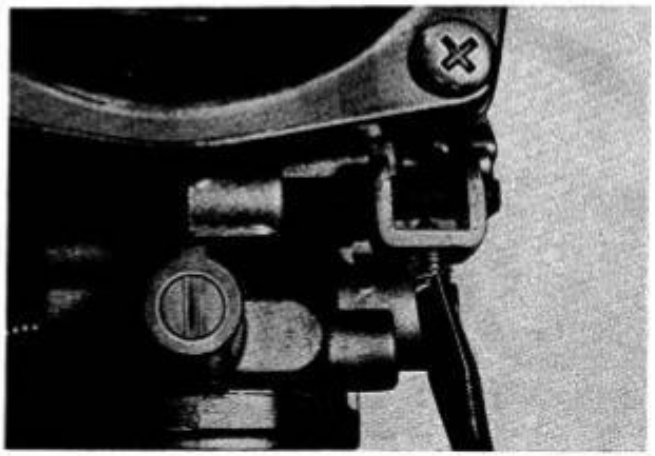

Thread lock cement	99000-32040

Tightening torque	0.6 - 1.0 N·m [0.06 - 0.10 kg-m 0.4 - 0.7 lb-ft]

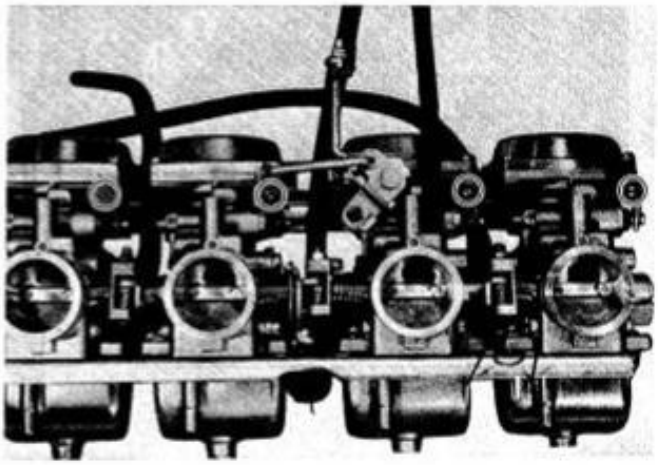

- Secure throttle bracket to No. 3 carburetor, and secure starter bracket to No. 2 carburetor cap, using screws.

Tightening torque	2.5 - 4.5 N·m [0.25 - 0.45 kg-m 1.8 - 3.0 lb-ft]

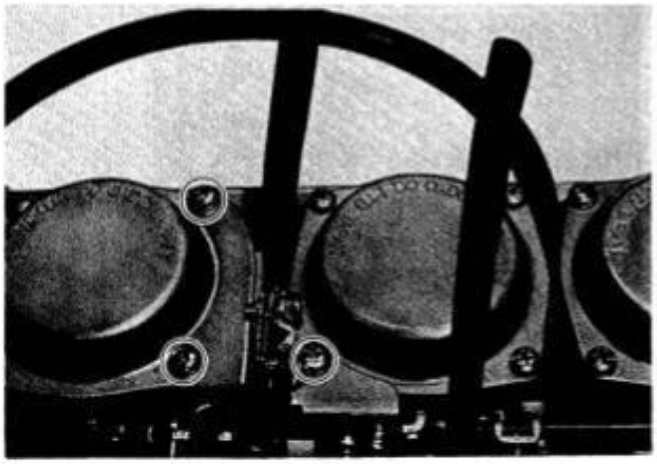

- Set each throttle valve in such a way that its top end ① meets the foremost bypass ②. This is accomplished by turning throttle valve stop screw ③ and balance screw ④.

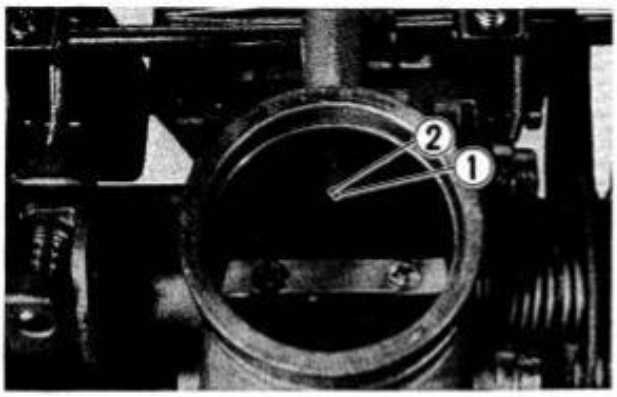

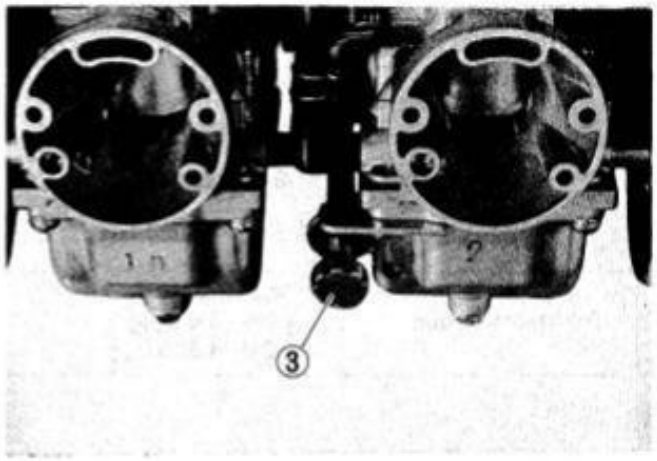

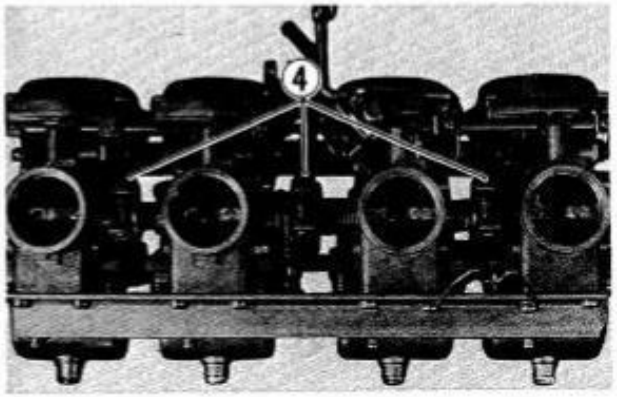

NOTE: When adjusting the throttle balance screws, adjusting order is as follows:
Ⓐ (for No. 2 carb.) → Ⓑ (for No. 1) → Ⓒ (for No. 4)

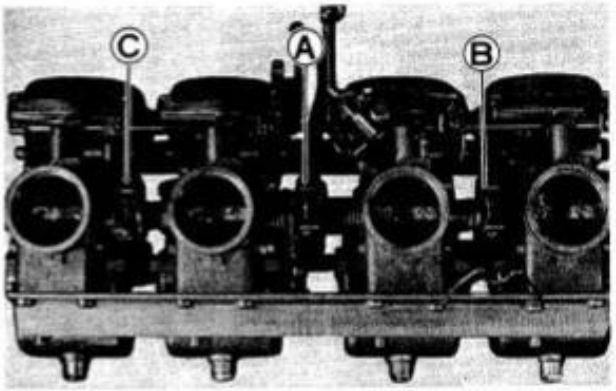

After each job is completed, mount the carburetor on the engine and the following adjustments are necessary.

* Engine idle r/min
* Throttle cable play
* Balancing carburetor

INSPECTION

FUEL LEVEL MEASUREMENT

To check the fuel level, proceed as follows:

Checking fuel level in each float chamber

1. Leave fuel cock lever in "ON" or "RES" position.
2. Place machine on center stand.
3. Remove float chamber drain plug and install the special tool.
4. Run the engine at the idling speed (1 000 – 1 200 r/min), and measure distance Ⓐ with the middle line of the level gauge aligned with the mating surface of the float bowl as shown in the illustration Ⓐ should be within the range specified here.

Fuel level gauge	09913-14511
Distance Ⓐ: 4.5 - 5.5 mm (0.18 - 0.22 in)	

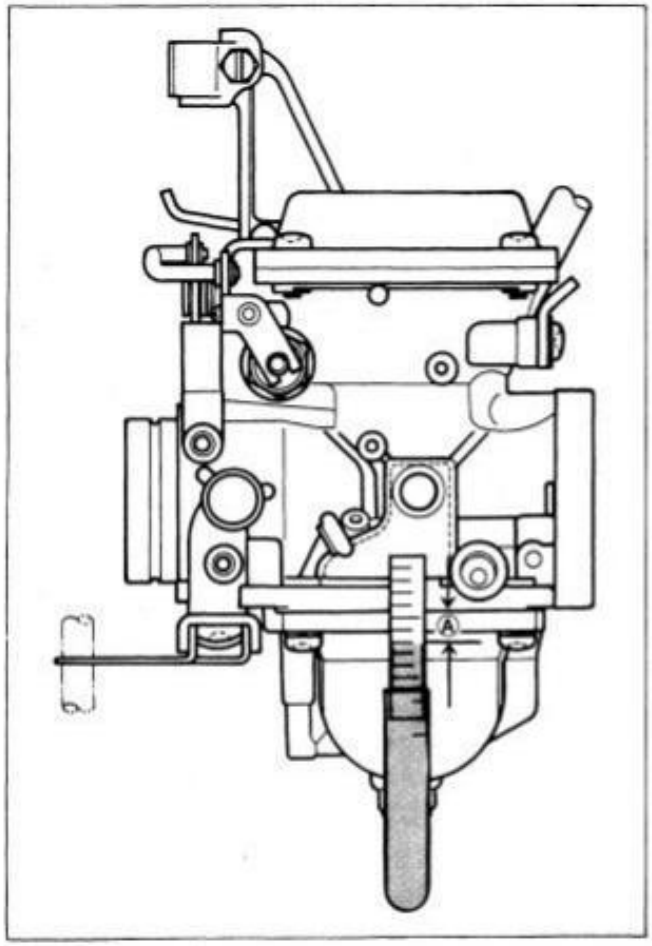

NOTE: When checking the fuel level, place the machine on the center stand. The fuel level should be center of the float chamber.

Fuel level adjustment

If distance Ⓐ is not within the specified range, it means that float height is off the specification, to adjust this height, as shown page 269.

BALANCING THE CARBURETORS

When any carburetor has been disassembled or replaced, check that the negative pressures (vacuum) in four carburetors are well balanced, using the carburetor balancer set in the following manner:

1. Place machine on center stand.
2. After warming up the engine completely, remove either No. 1 or No. 4 vacuum inlet screw, using a 4-mm hexagon wrench.

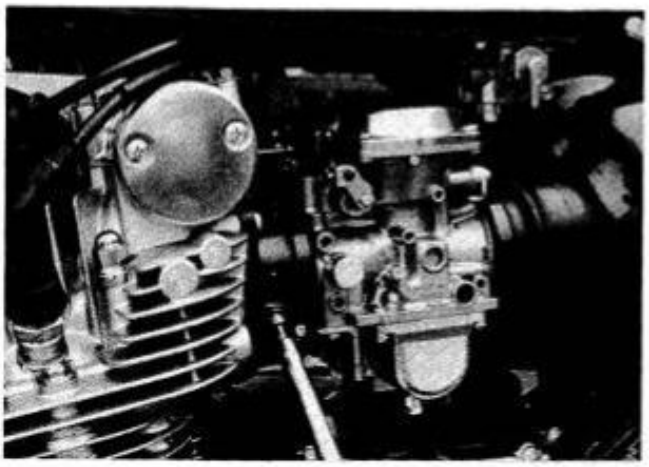

3. Tie one of the four rubber hoses of the carburetor balancer gauge to the adapter.

4. Start up the engine, and keep it running steadily at 1 500 - 2 000 r/min.

Carburetor balancer set	09913-13121

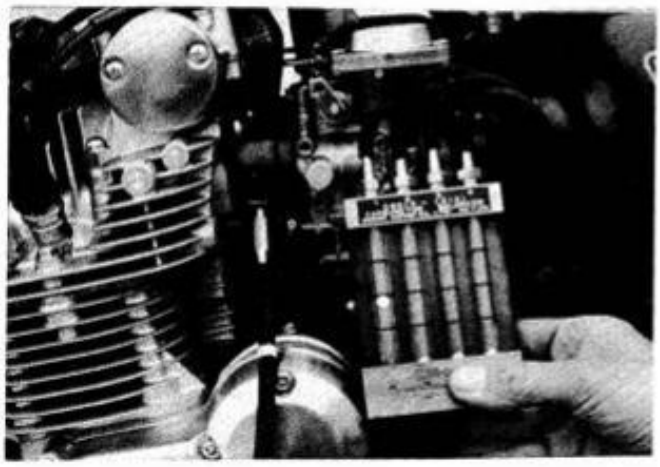

5. Turn the air screw of the gauge so that the vacuum acting on the tube of that hose will bring the steel ball in the tube to the center.

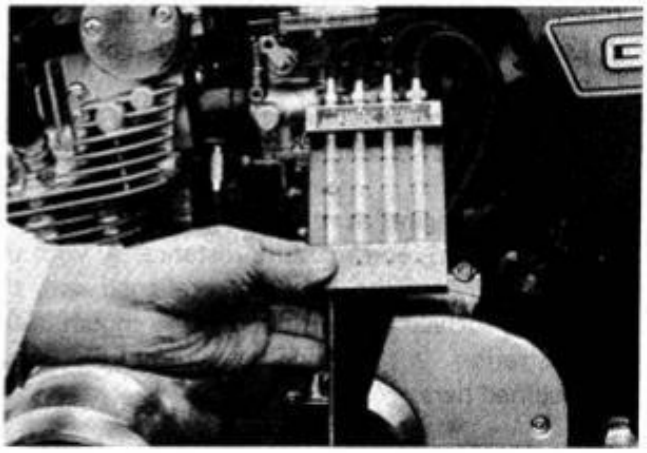

6. On the three other screws, follow the same procedure as above.
7. Remove the respective vacuum inlet screws and insert the adapters in the holes. Connect the balancer gauge hoses to these adapters, one hose to one adapter, and balance the four carburetors as follows:
8. When the balls in Nos. 1 and 4 carburetor balancers are on the same level and those in the Nos. 2 and 3 tubes also at the same level, but lower by one half of the ball diameter than the Nos. 1 and 4 tubes as shown.

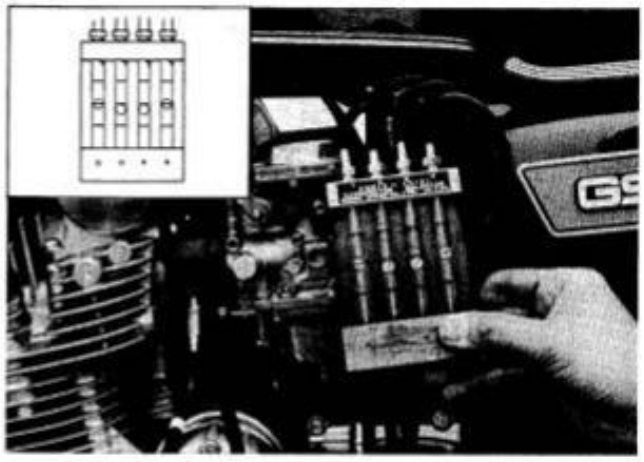

If the balls in Nos. 1 and 4 or in Nos. 2 and 3 carburetor balancers are off more than the radius of the ball, make an adjustment as follows:

CAUTION: Do not disturb the pilot screw. This component is pre-set at the factory by the very specialized equipment.

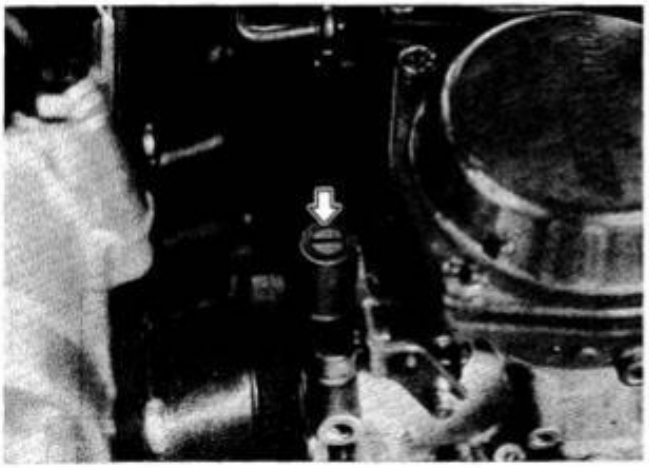

1. Loosen throttle valve balancing screw lock nut, and by turning balancing screw, with special tool adjust the position of steel ball in balancer gauge.

Throttle valve adjust wrench	09913-14910

Adjusting order

A (for No. 2 carb) → B (for No. 1) → C (for No. 4)

NOTE:
* If an adjustment is required, it is suggested that the fuel tank is removed and use separate fuel tank.
* Be sure to plug the fuel cock vacuum line.

2. After adjusting, tighten throttle valve balancing screw lock nut.

3. Adjust the idling speed to somewhere between 1 000 and 1 200 r/min with throttle stop adjusting screw.

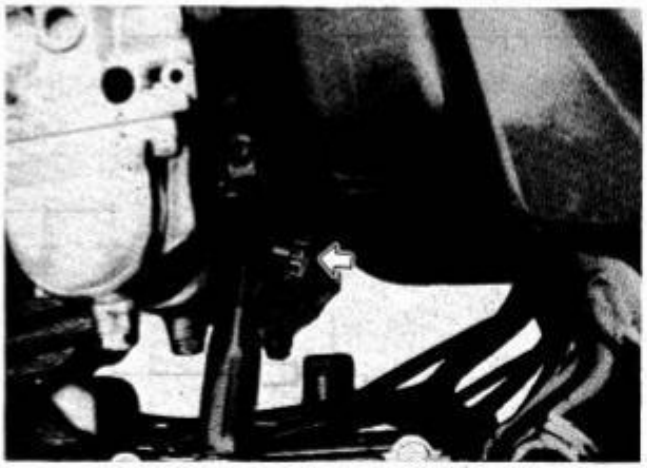

CAUTION: This check should be done as quick as possible. If adjustment requires a longer time, it is advisable to cool the engine by sending air to prevent engine overheating.

THROTTLE CABLE ADJUSTMENT

1. Loosen lock nut ①.
2. Adjust the cable slack by turning adjuster ② in or out to obtain the correct slack 0.5 - 1.0 mm (0.02 - 0.04 in).

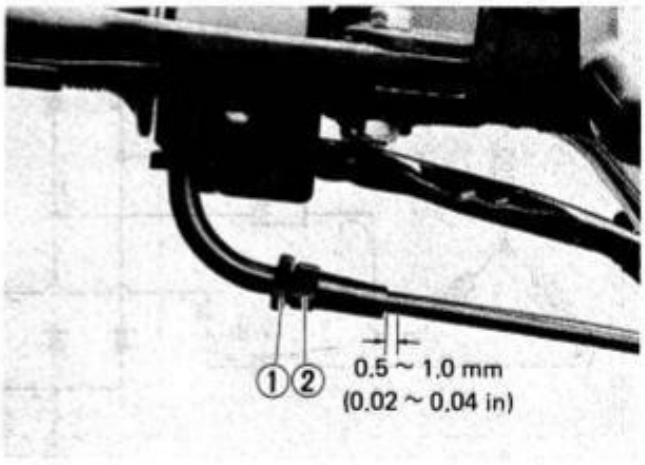

3. After adjusting the slack, tighten the lock nut.

CHARGING SYSTEM

DESCRIPTION

This motorcycle, the circuit of its charging system is indicated in the figure, is composed of AC generator, regulator/rectifier unit and battery.
The AC current generated from AC generator is rectified by rectifier and is turned into DC current, then it charges the battery.

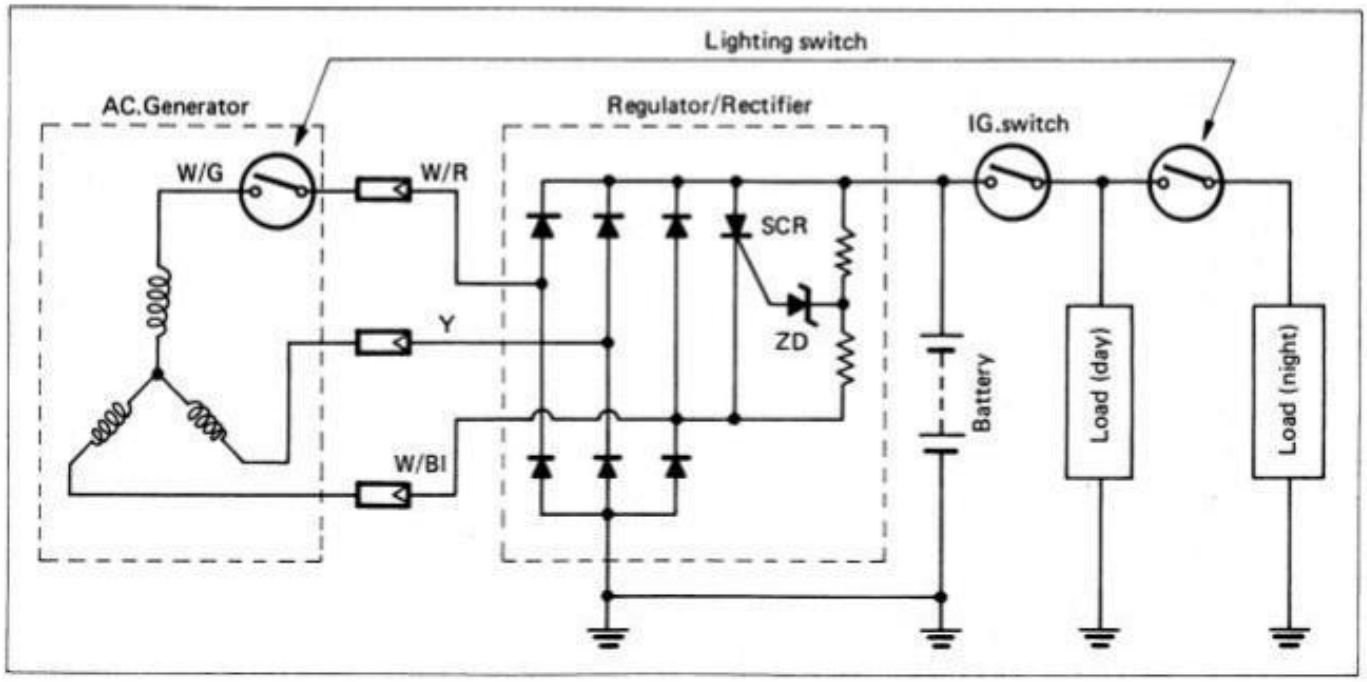

Function of Regulator

While the engine r/min is low and the generated voltage of AC generator is lower than the adjusted voltage of Regulator, the regulator does not function, incidentally the generated current charges the battery directly.

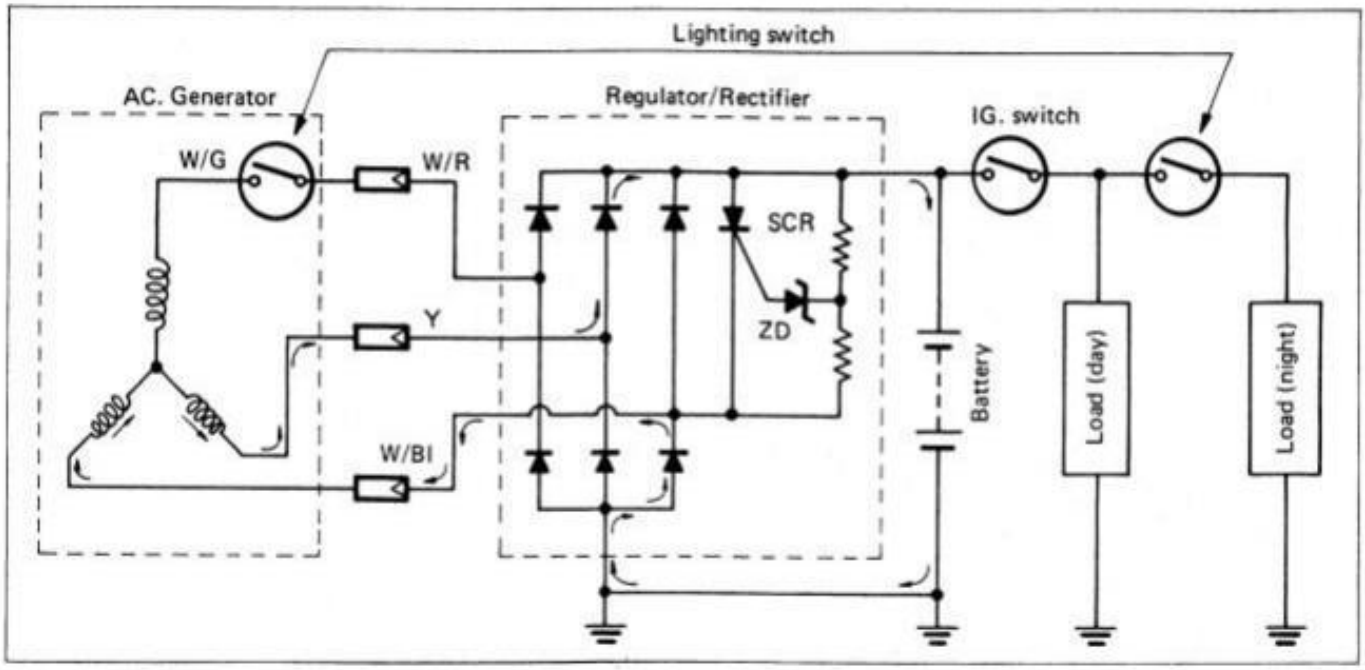

When the engine r/min becomes higher, the generated voltage of AC generator also becomes higher and the voltage between points Ⓐ and Ⓑ of regulator becomes high accordingly, and when it reaches the adjusted voltage of regulator, ZD (Zener diode) sends signal to the gate of SCR (Thyristor). Then the SCR becomes conductive to the direction from point Ⓒ to point Ⓓ. Namely at the state of this, the current generated from the AC generator gets through SCR without charging the battery and returns to AC generator again. At the end of this state, since the AC current generated from AC generator flows into the point Ⓓ, reverse current tends to flow to SCR, then the circuit of SCR turns to OFF mode and begins to charge the battery again. Thus these repetitions maintain charging voltage to the battery constant and protect it from over-charging.

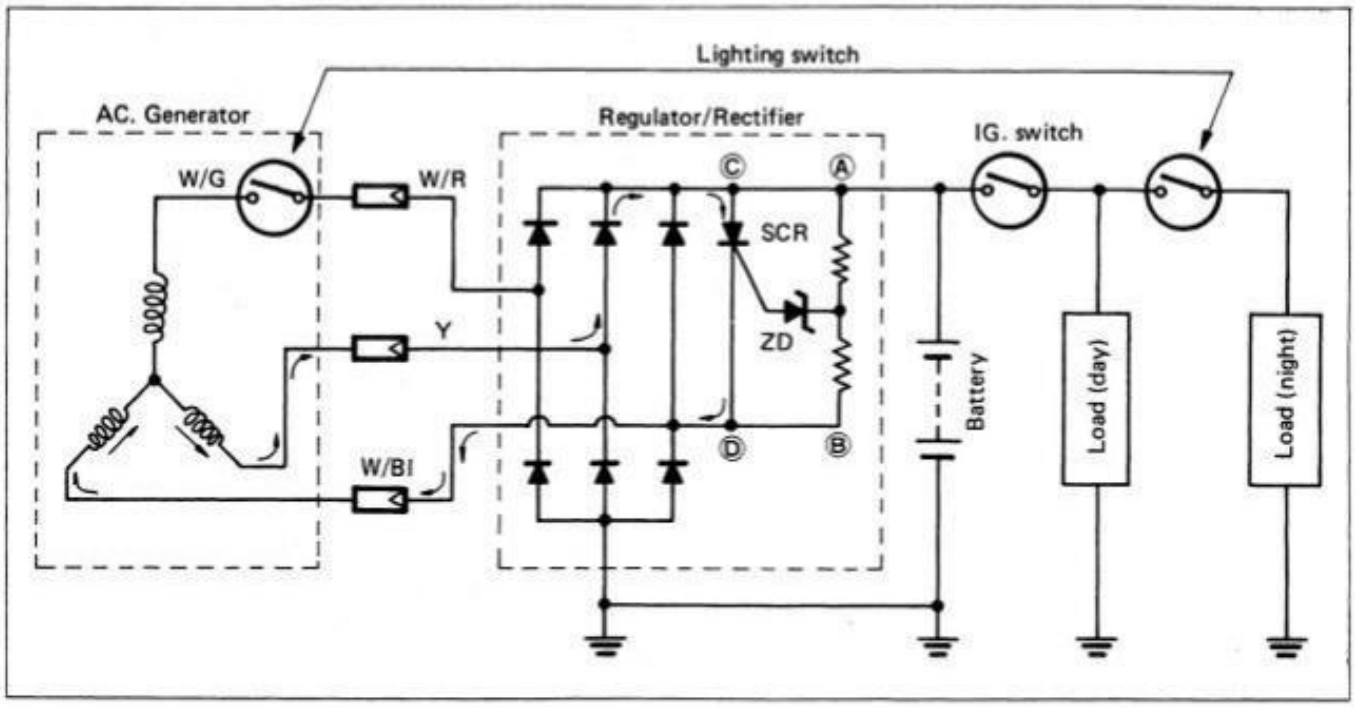

INSPECTION

CHARGING OUTPUT CHECK

- Start the engine and keep it running at 5 000 r/min with the lighting switch turned ON (High position).
- Using pocket tester, measure the DC voltage between the battery terminals.

  If the tester reads under 14V or over 15.5V, the regulator/rectifier is faulty.

NOTE: When making this test, be sure that the battery is in a full-charged condition.

STD charging output	14 – 15.5 V (DC) at 5 000 r/min

09900-25002	Pocket tester

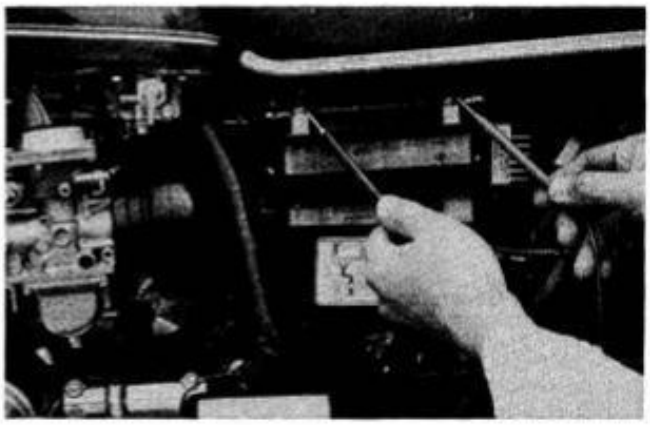

AC GENERATOR NO-LOAD PERFORMANCE

- Disconnect the three lead wires of the AC generator terminal.
- Start the engine and keep it running at 5 000 r/min.
- Using the pocket tester, measure the AC voltage between the three lead wires.

  If the tester reads under 80V, the AC generator is faulty.

STD No-load performance	80 V (AC) or Over at 5 000 r/min

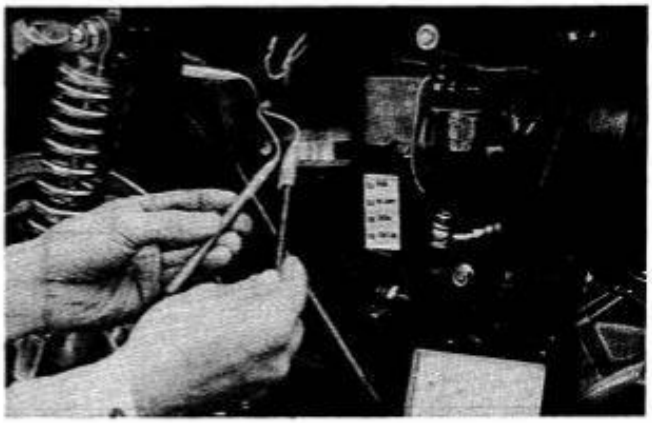

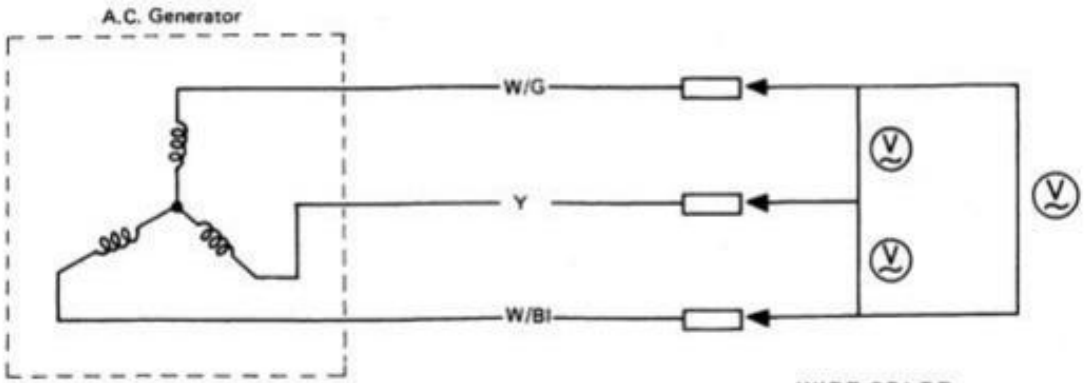

WIRE COLOR
Y . . . . . Yellow
W/Bl . . . . White with Blue tracer
W/G . . . . . White with Green tracer

Using pocket tester, check the continuity between the lead wires of the stator.
Also check that the stator core is insulated.

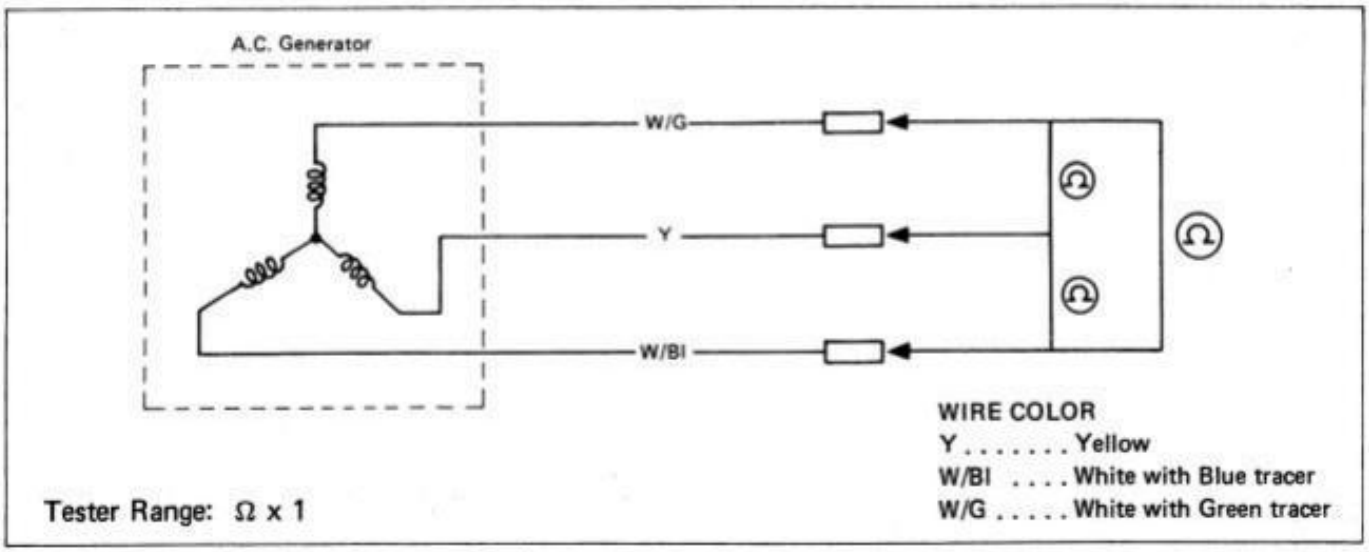

REGULATOR/RECTIFIER
Using pocket tester, check the continuity between the lead wires as shown.

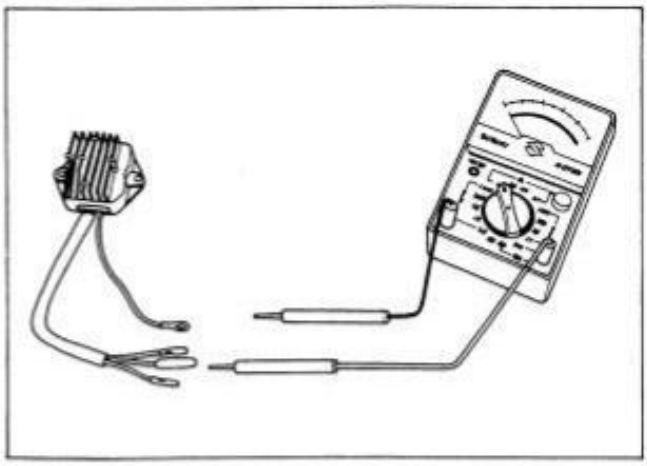

Regulator/Rectifier checking chart:

NORMAL DIRECTION: CONTINUITY

(+) probe of tester	(–) probe of tester
R	Y
	W/BI
	W/R
	B/W
Y	B/W
W/BI	
W/R	

REVERSE DIRECTION: NO CONTINUITY

(+) probe of tester	(–) probe of tester
Y	R
W/BI	
W/R	
B/W	
B/W	W/BI
	W/R
	Y

FULL-TRANSISTORIZED IGNITION SYSTEM

(Only for Canada)

DESCRIPTION

A fully transistorized ignition system is now employed on the GS550. Its primary advantages are:

* Trouble free operation due to elimination of contact breaker points which can become contaminated.
* Ignition timing is maintained properly at all times and requires no maintenance.
* Free from arcing and provides the ignition coil with stable secondary voltage.
* Excellent vibration and moisture resistance.

TRANSISTOR

Transistor functions can be divided into four main functions:

1. amplification
2. switching
3. oscillation
4. modulation

These functions are utilized in the ignition system employed on the GS550.
Transistors are divided into two groups, those being of the NPN and PNP types, and the transistors used in the GS550 model is of the NPN type only, works an amplifier and switching device.

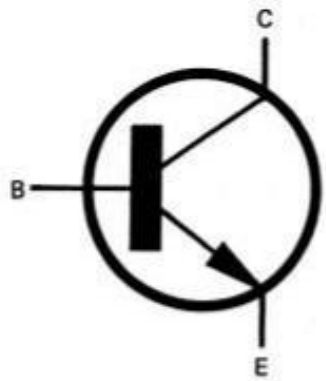

B: BASE
C: COLLECTOR
E: EMITTER

Each transistor has three terminals identified as the Base (B), Collector (C), and Emitter (E), and operation is as follows:
On a NPN type the base is the controlling terminal of the transistor operation. On this type, the base utilizes only a positive or incoming signal to do the "ON", or "OFF" switching. The collector is the terminal where voltage is supplied to the transistor and the emitter is the terminal for passing this current for useage when the base has the proper "signal". Usually the voltage applied across the collector to the emitter is much larger than that needed at the base. This allows a relatively low voltage at the base to control large working voltages across the collector to the emitter.
The transistor ignition system used on the GS550 is the KOKUSAN brand and consists of a signal generator, which employs a rotor and two pick-up coils, the transistor unit, ignition coils, and spark plugs.

SIGNAL GENERATOR

The signal generator is mounted on the right hand side of the engine in the area commonly used for the contact breaker points. It is comprised of a magnet embedded rotor attached to a mechanical advance mechanism and two pick-up coils, with iron plates at their bases, affixed to a plate. Each pick-up coil consists of a coil or wire and a yoke or coil and is mounted 180° apart on the plate.

As the rotor magnet is turned past the coils, AC current is produced and used for switching within the transistor unit.

The transistor unit controls power to the ignition coils and causes the spark plugs to fire at the proper time.

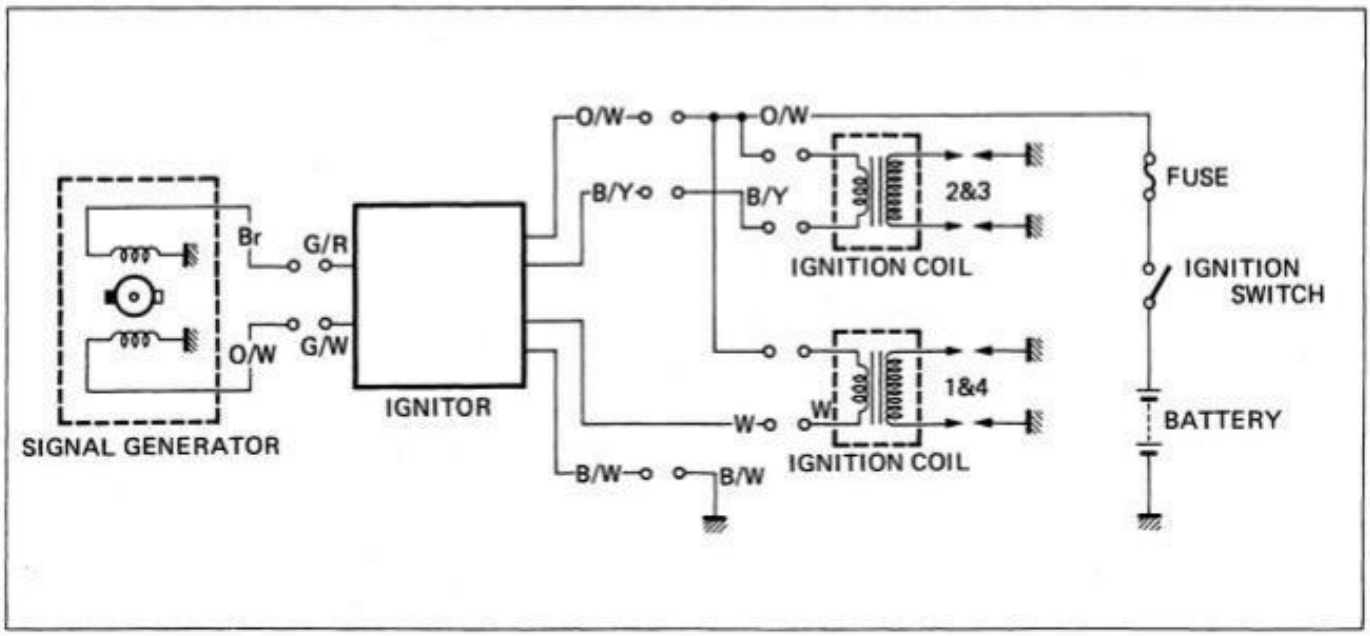

STEERING STEM

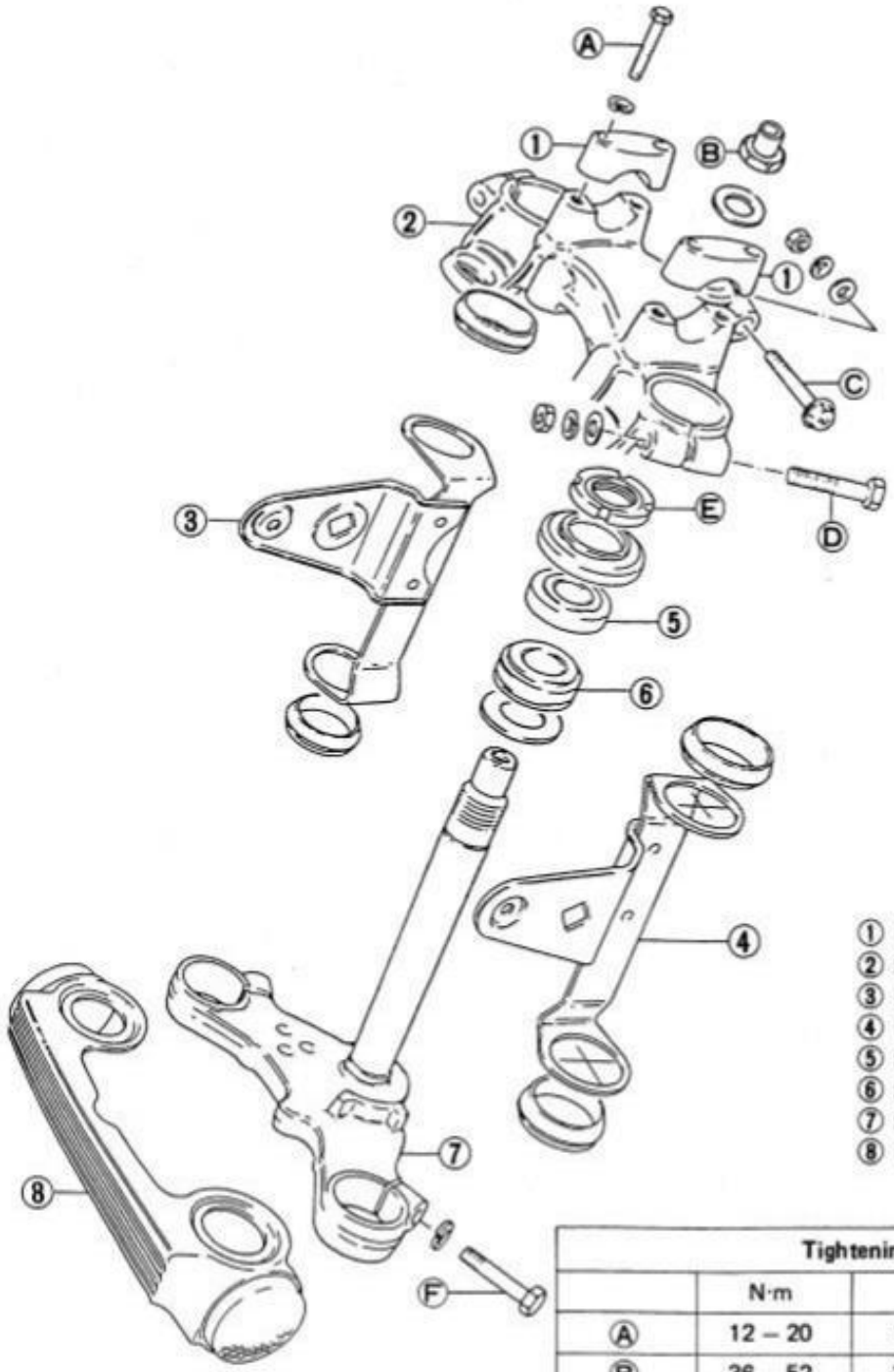

① Handlebar clamp
② Steering stem upper bracket
③ Headlight bracket (R)
④ Headlight bracket (L)
⑤ Steering stem bearing (Upper)
⑥ Steering stem bearing (Lower)
⑦ Steering stem lower bracket
⑧ Front fork cover

Tightening torque			
	N·m	kg·m	lb-ft
Ⓐ	12 – 20	1.2 – 2.0	8.5 – 14.5
Ⓑ	36 – 52	3.6 – 5.2	26.0 – 37.5
Ⓒ	15 – 25	1.5 – 2.5	11.0 – 18.0
Ⓓ	20 – 30	2.0 – 3.0	14.5 – 21.5
Ⓔ	40 – 50	4.0 – 5.0	29.5 – 36.0
Ⓕ	20 – 30	2.0 – 3.0	14.5 – 21.5

REMOVAL AND DISASSEMBLY

- The steering stem can be removed from the machine in the same manner as in the page 85. therefore, we discuss the subsequent operations.
- Remove the screw and disconnect the choke cable from the carburetor.

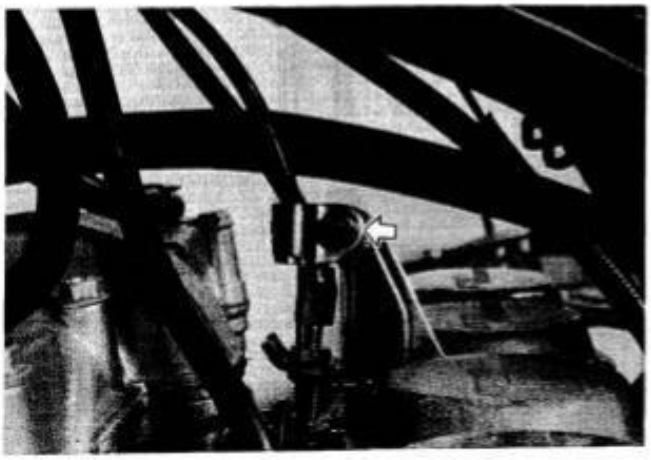

- Loosen the lock nut, turn the choke knob body counterclockwise, and remove the choke cable from the steering stem head pipe.

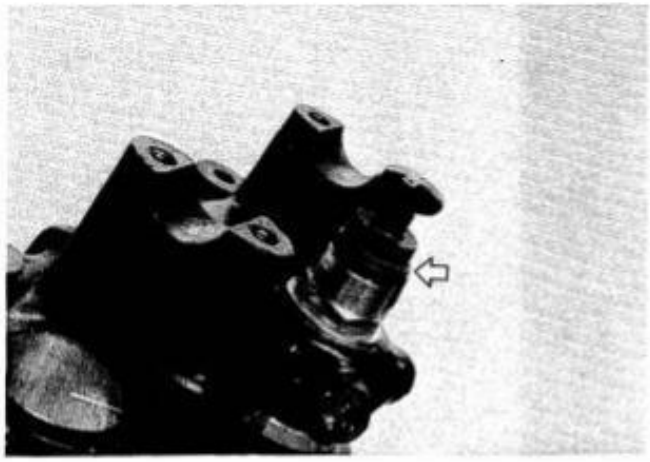

- Remove the steering stem head nut and loosen clamp bolt.

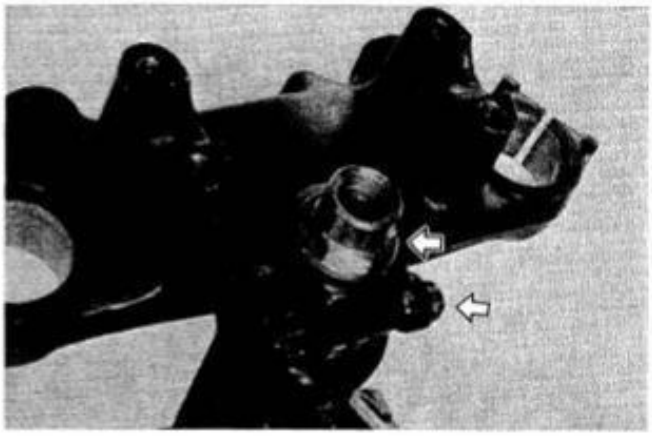

- Take off the steering stem upper bracket.

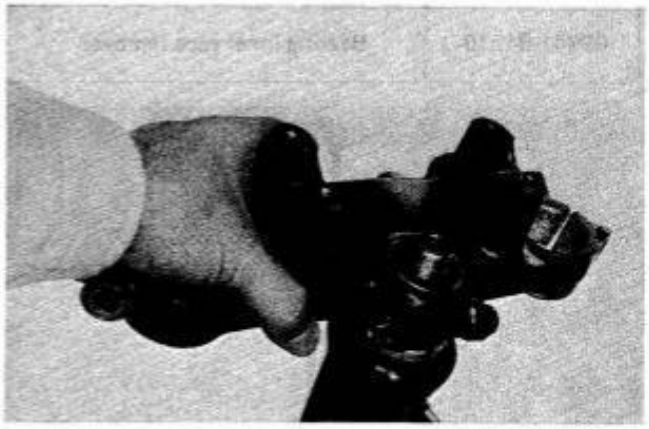

- Remove the steering stem nut by using special tool.

NOTE: Hold the steering stem lower bracket by hand to prevent dropping.

09940-14910	Steering nut socket wrench

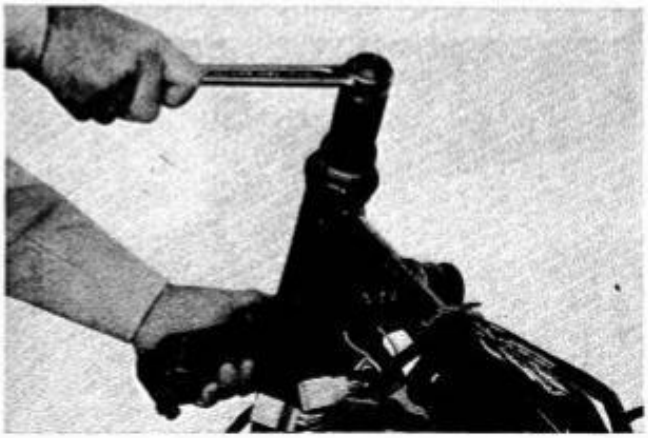

- Draw out the upper bearing and the steering stem lower bracket.

- Draw out the lower bearing by using special tool.

09941-84510	Bearing inner race remover

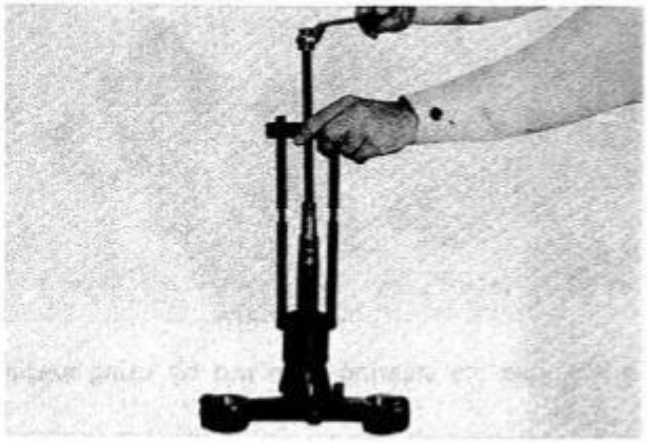

- Draw out the bearing outer races upper and lower by using special tool.

09941-54910	Steering outer race remover
09941-74910	Steering bearing installer

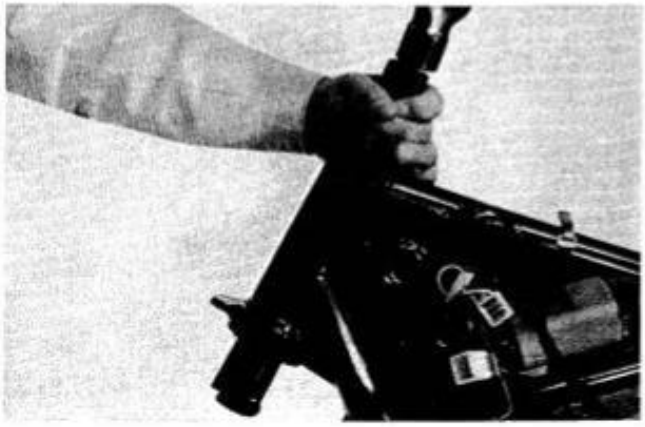

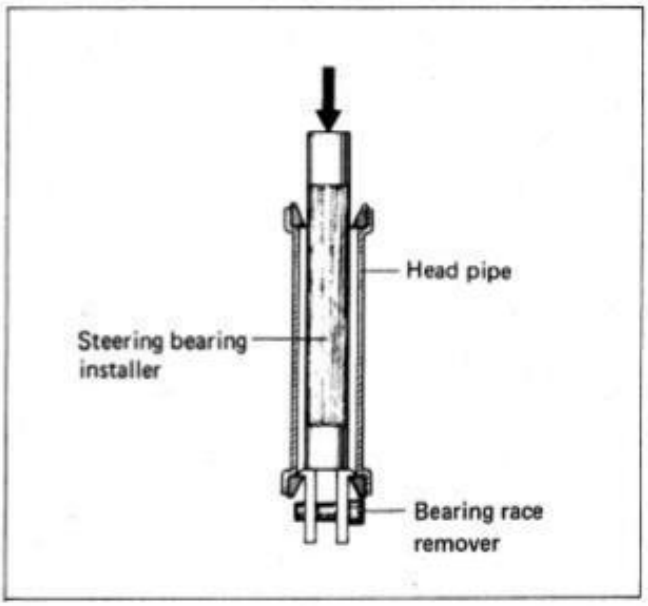

REASSEMBLY

Reassemble and remount the steering stem in the reverse order of disassembly and removal and also carry the following steps:

OUTER RACES

Press in the upper and lower outer races using special tool.

09941-34511	Steering outer race installer

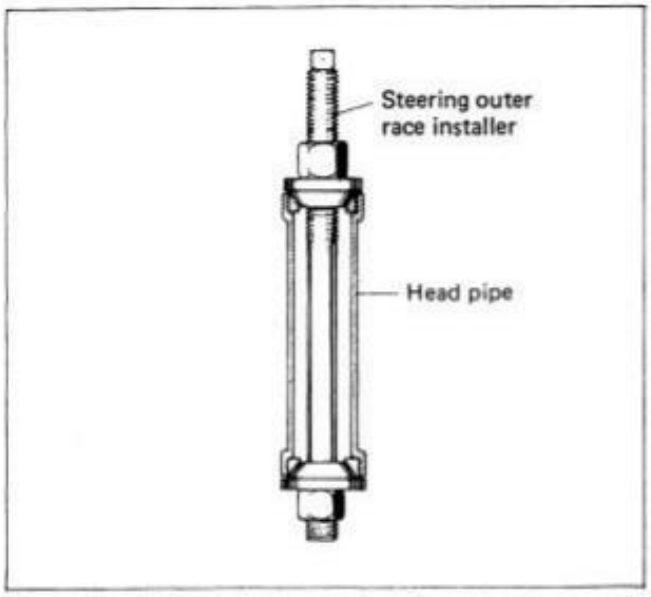

BEARINGS

Press in the lower bearing by using special tool.

09941-74910	Steering bearing installer

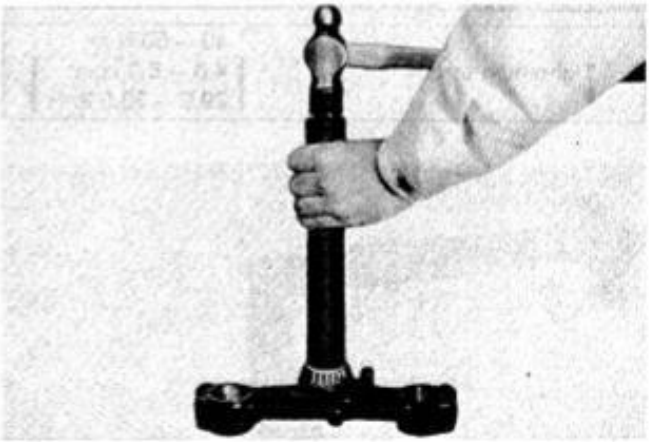

Apply grease upper and lower bearing before remount the steering stem.

99000-25010	Suzuki super grease "A"

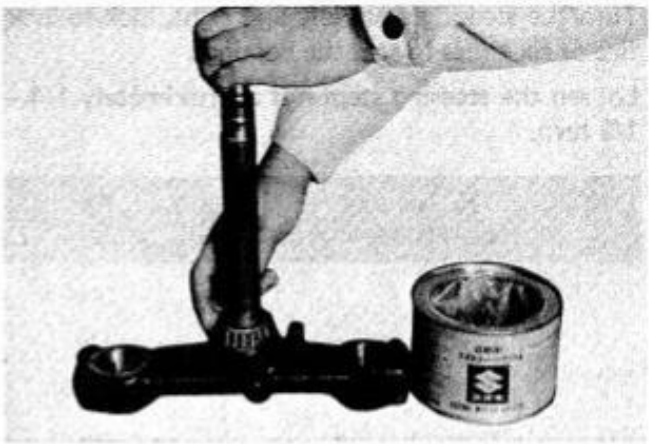

STEM NUT

Tighten the steering stem nut by using special tool with specified torque.

09940-14910	Steering nut socket wrench

Tightening torque	40 – 50 N·m [4.0 – 5.0 kg-m 29.0 – 36.0 lb-ft]

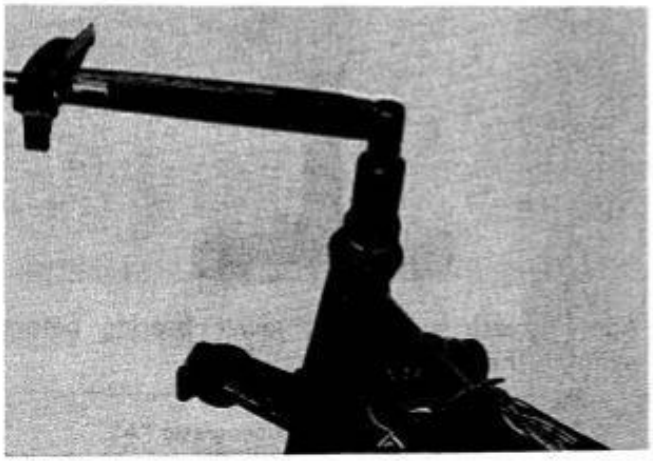

Turn the steering stem left and right, lock-to-lock, five or six times to seat the bearings.

Loosen the steering stem nut approximately 1/4 – 1/2 turn.

NOTE: [illegible]

After performing the adjustments and installing the steering stem head, "rock" the front wheel assembly backward and forward to ensure that there is no play and that the procedure was accomplished correctly. If play is noticeable, repeat the above steps.

With the front wheel off the ground, check that the front fork turns smoothly and easily left to right. With a slight amount of pressure being applied to the end of the handlebars, the weight of the front wheel alone should allow the front forks to slowly move to their extreme position either left or right.

FRONT MASTER CYLINDER

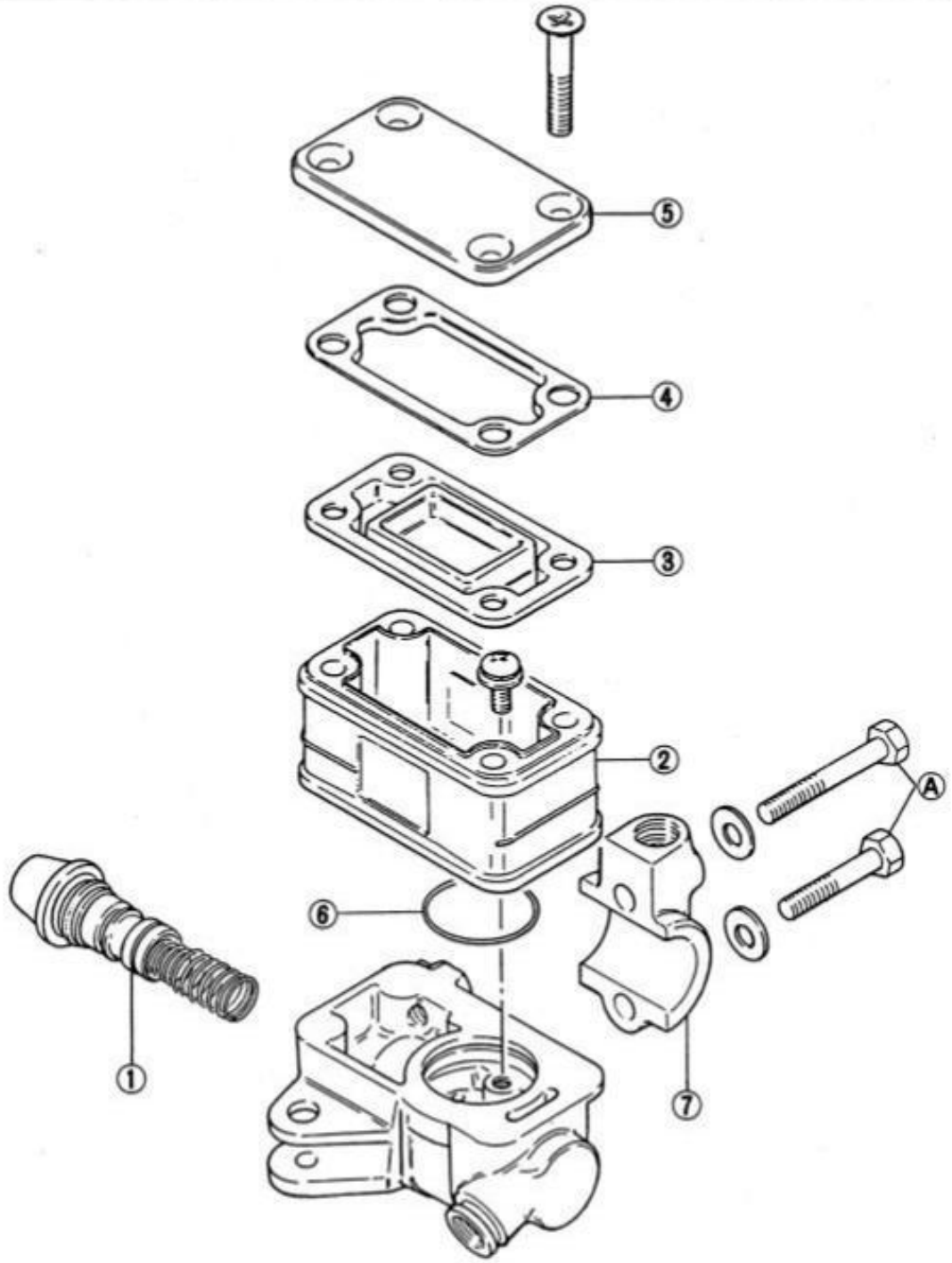

① Piston & cup set
② Reservoir
③ Diaphragm
④ Plate
⑤ Cap
⑥ O ring
⑦ Holder

Tightening torque			
	N·m	kg·m	lb-ft
Ⓐ	5 – 8	0.5 – 0.8	3.5 – 6.0

MASTER CYLINDER REMOVAL AND DISASSEMBLY

- Take off front brake light switch.

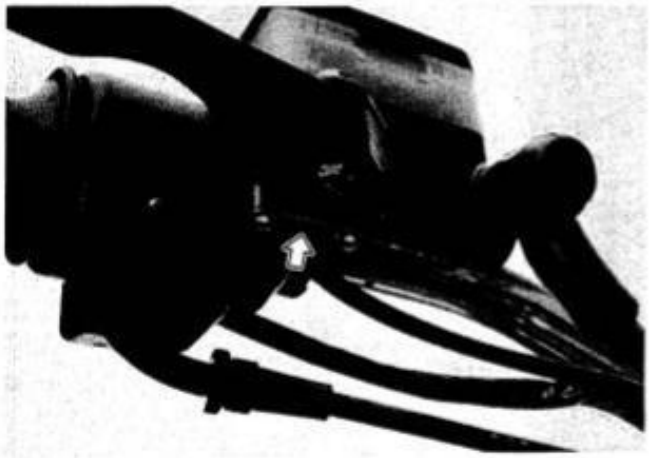

- Remove front brake lever.

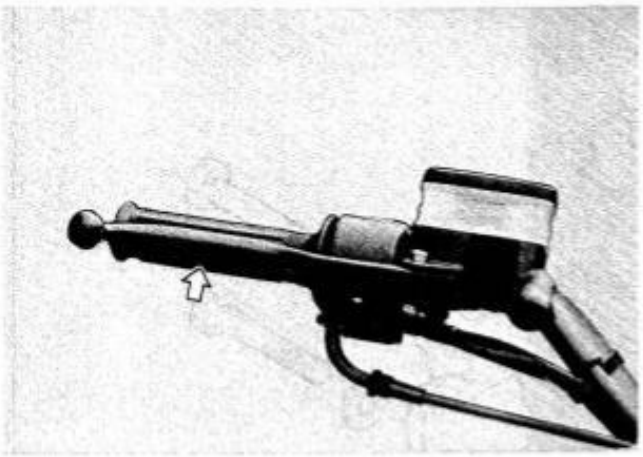

- Place a rag underneath the union bolt on the master cylinder to catch spilled drops of brake fluid. Unscrew the union bolt and disconnect the brake hose/master cylinder joint.

CAUTION: Completely wipe off any brake fluid adhering to any part of motorcycle. The fluid reacts chemically with paints, plastics, rubber materials, etc.

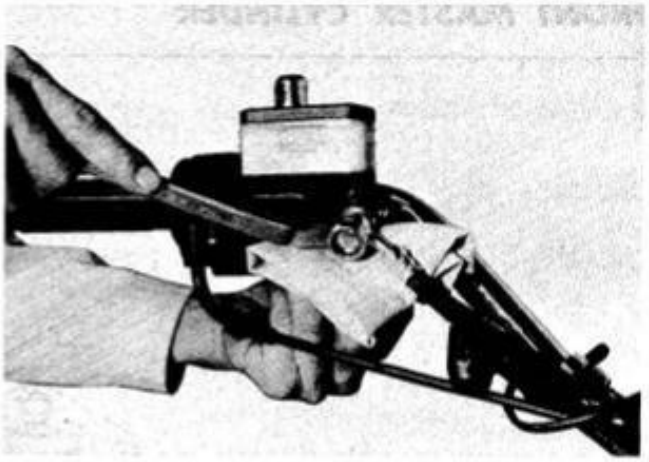

- Remove master cylinder ass'y after removing two fitting bolts.

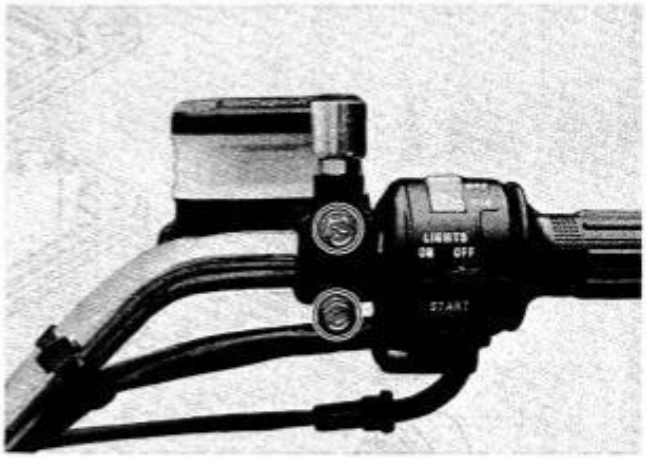

- Remove filler cap and drain brake fluid.

- Remove the two screws.

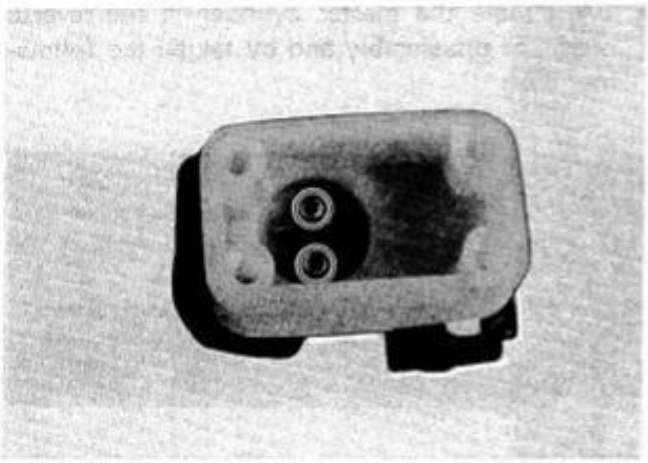

- Pull out the reservoir and O ring.

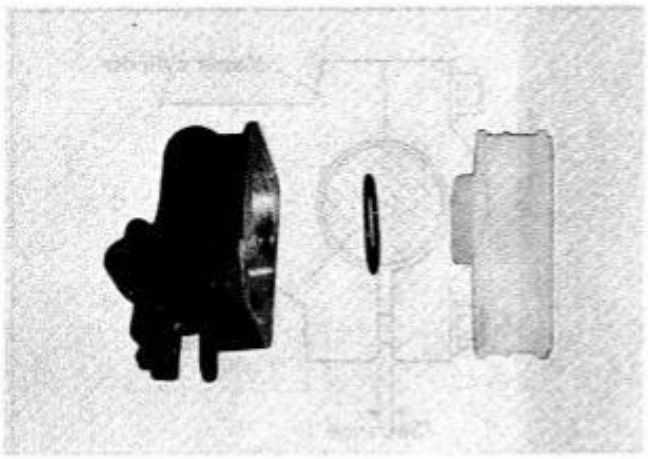

- Draw out dust seal boot.

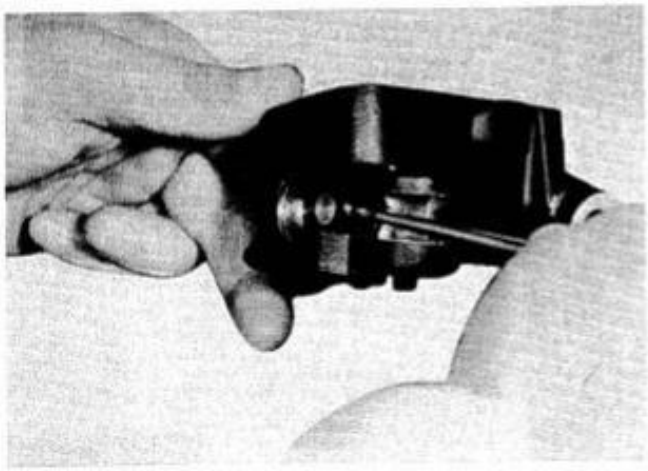

- Remove circlip by using special tool.

09900-06108	Snap ring pliers

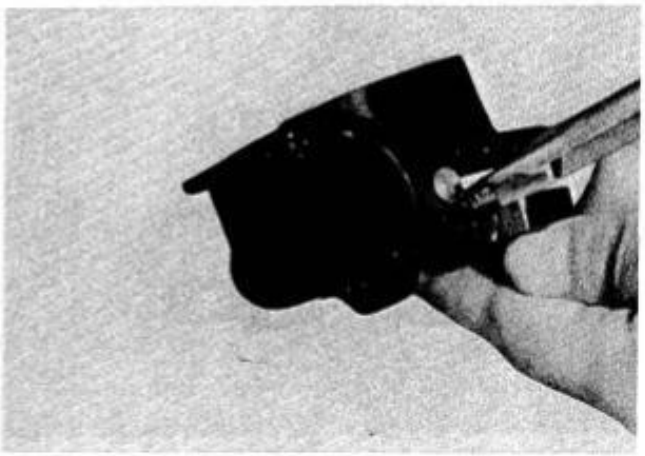

- Pull out piston, primary cup and spring.

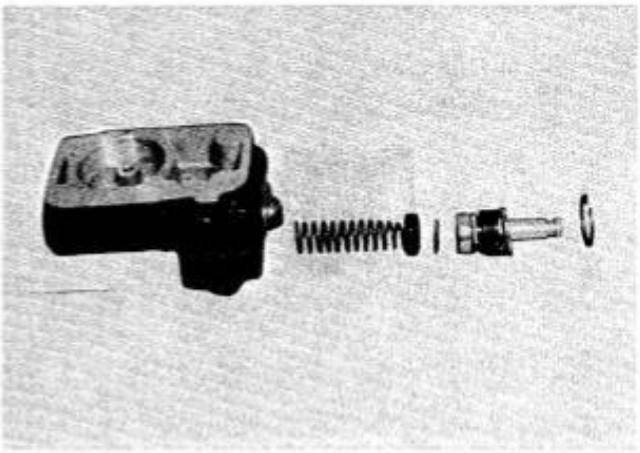

MASTER CYLINDER INSPECTION

- Inspect the cylinder bore wall for any scratch or other damage.

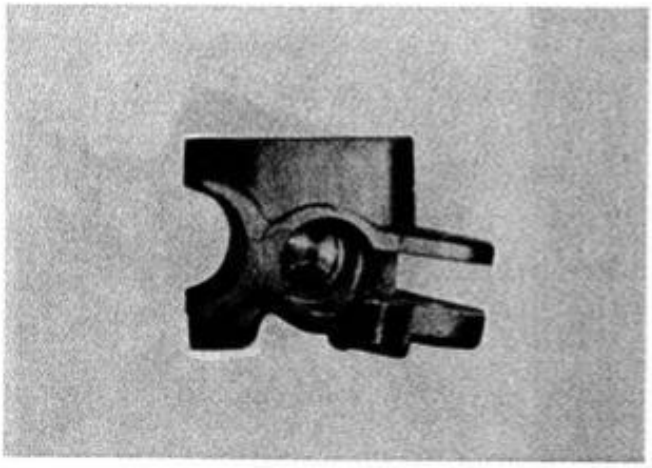

- Inspect the piston surface for scratch or other damage.

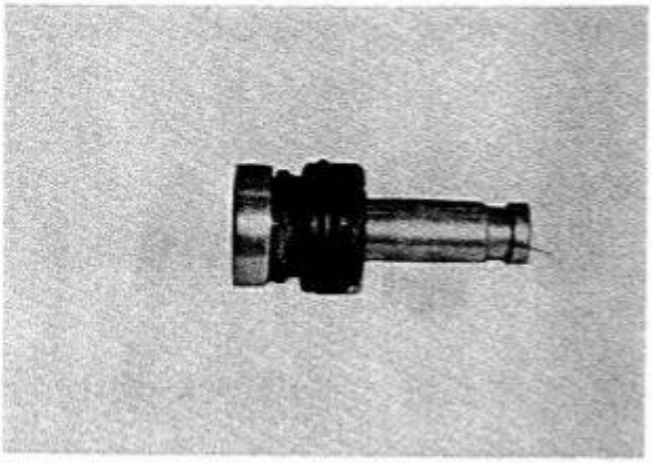

- Inspect the primary cup, secondary cup and dust seal boot for damage.

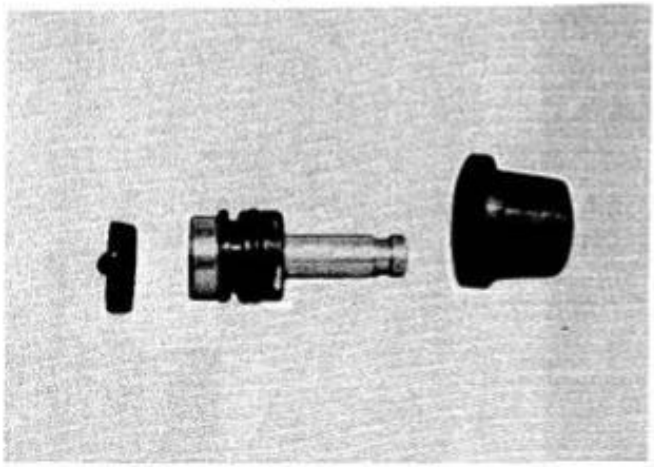

MASTER CYLINDER REASSEMBLY

- Reassemble the master cylinder in the reverse orders of disassembly and by taking the following steps:

[redacted]

- When remount the master cylinder to the handlebars, first tighten the clamp bolt for upside as shown.

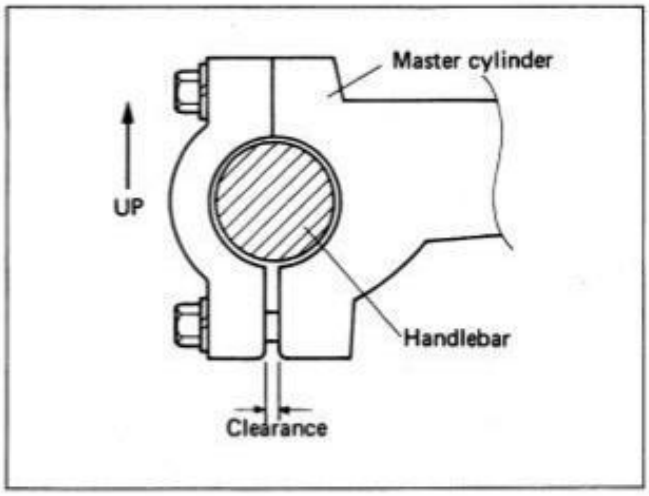

[redacted]

FRONT CALIPER

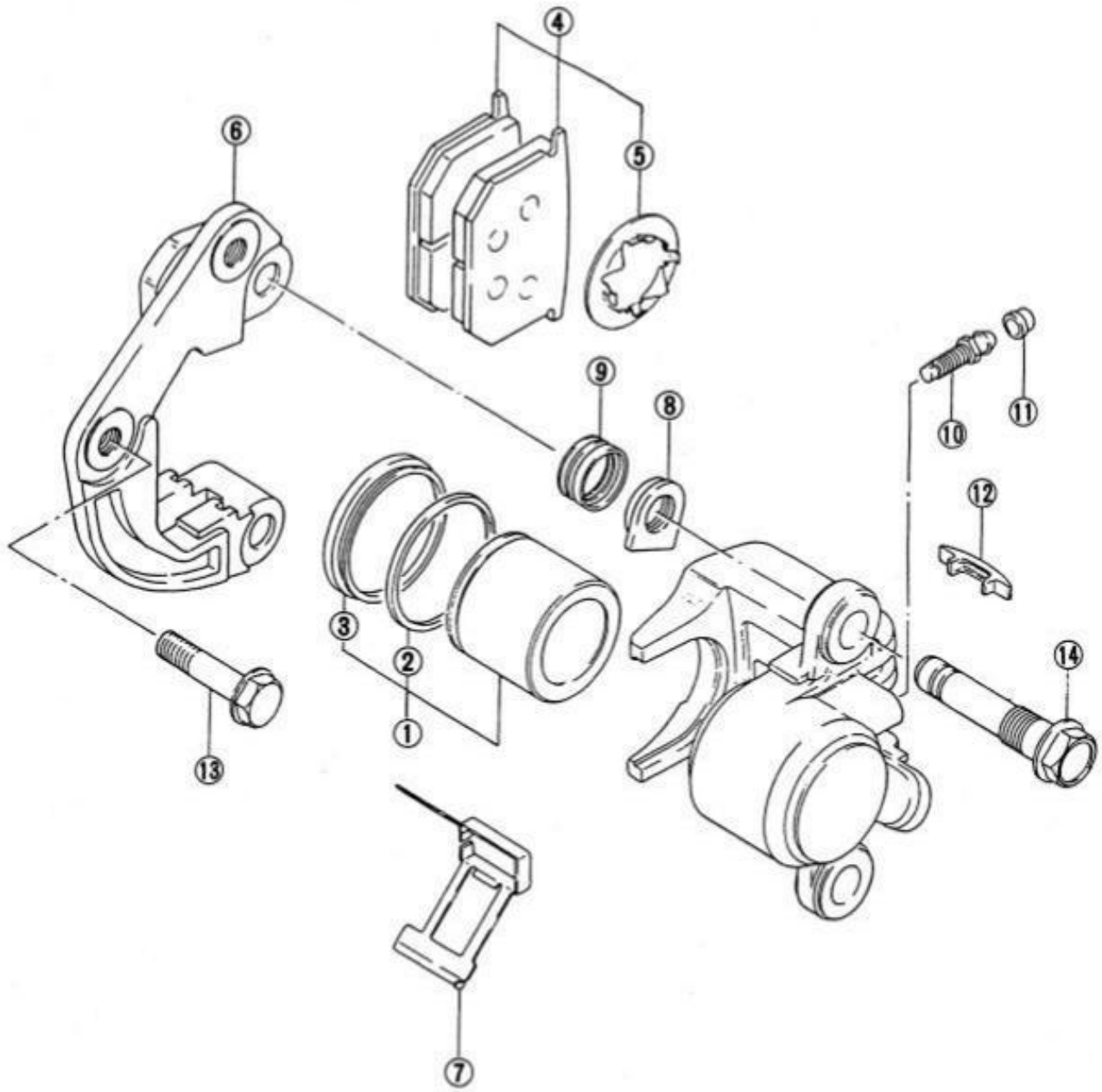

① Piston set
② Piston seal
③ Piston boot
④ Pad set
⑤ Pad shim
⑥ Caliper holder
⑦ Spring
⑧ Nut
⑨ Boot
⑩ Bleeder
⑪ Bleeder cap
⑫ Cover
⑬ Bolt
⑭ Bolt

Tightening torque			
	N·m	kg·m	lb·ft
⑬	20 – 40	2.0 – 4.0	14.5 – 29.0
⑭	40 – 55	4.0 – 5.5	29.0 – 40.0

BRAKE PAD REPLACEMENT

- Remove two bolts and take off caliper.

CAUTION: Do not operate the brake lever when removing the caliper.

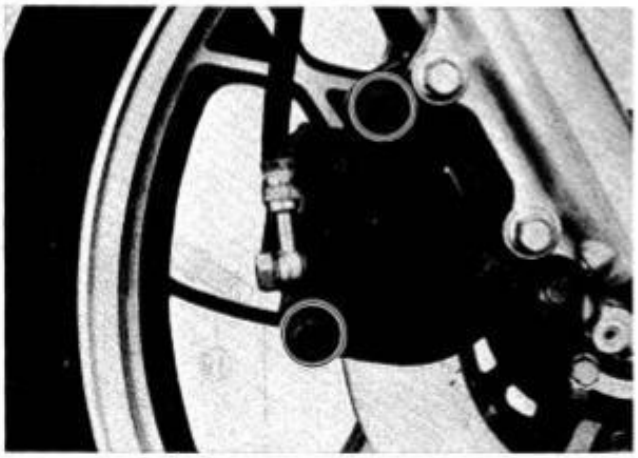

- Pull out brake pads.

CAUTION: Replace the brake pad with a set, otherwise braking performance will be adversely affected.

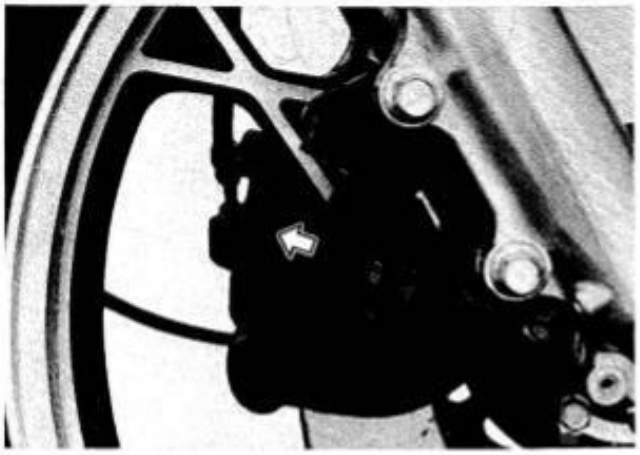

CAUTION: Do not apply pad grease, when installing the brake pads. Otherwise, the grease smears the disc surface, thus causing the brake to slip.

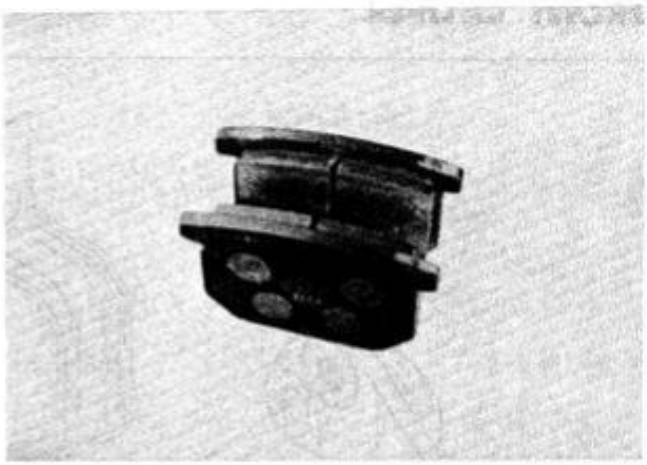

NOTE: Push in the piston all the way to the caliper when remount the caliper.

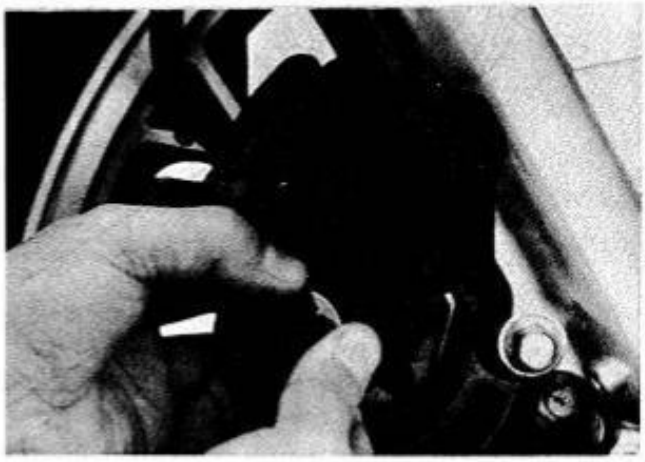

- Tighten the caliper axle bolts with specified torque.

Tightening torque	15 – 20 N·m [1.5 – 2.0 kg·m 11.0 – 14.5 lb·ft]

CALIPER REMOVAL AND DISASSEMBLY

- Disconnect brake hose and catch the brake fluid in a suitable receptacle.

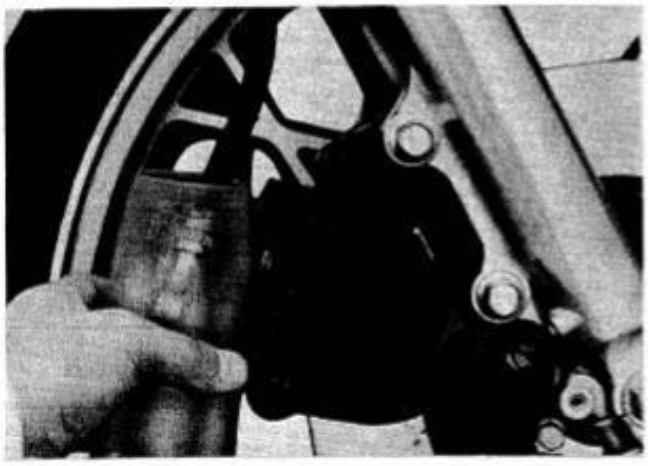

- Remove caliper axle bolts and take off caliper.

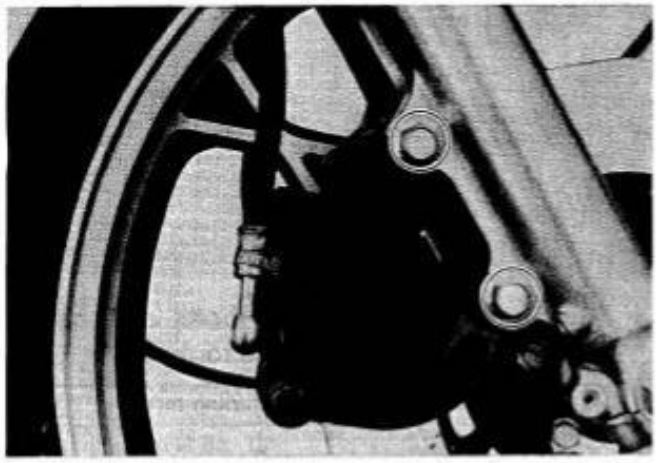

- Place a rag over the piston to prevent popping up. Draw out the piston by using air gun.

CAUTION: Do not use high pressure air for preventing piston damage.

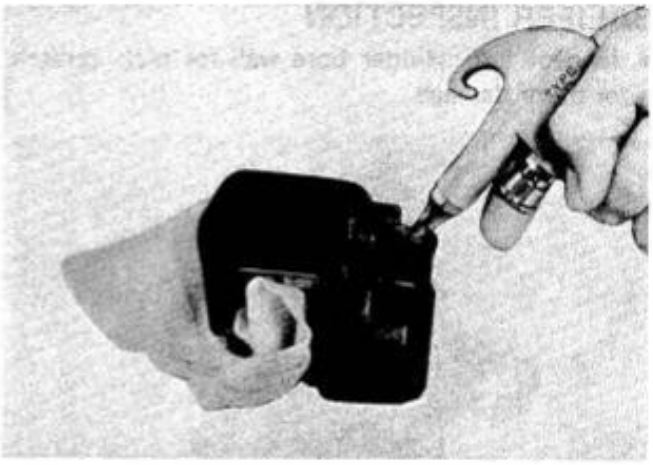

- Remove piston boot and piston seal.

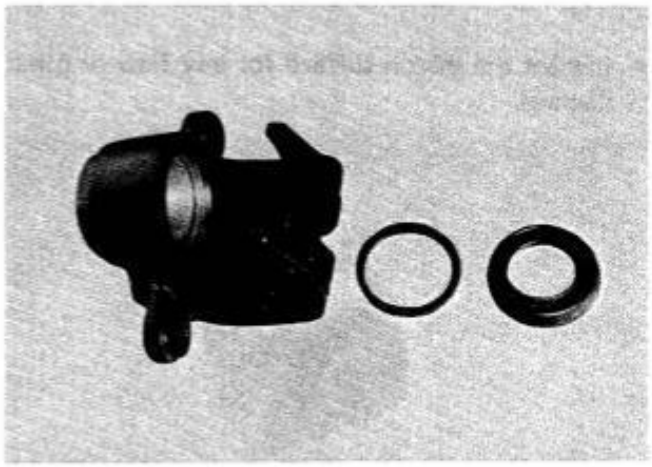

CALIPER INSPECTION

- Inspect the cylinder bore wall for nick, scratch or other damage.

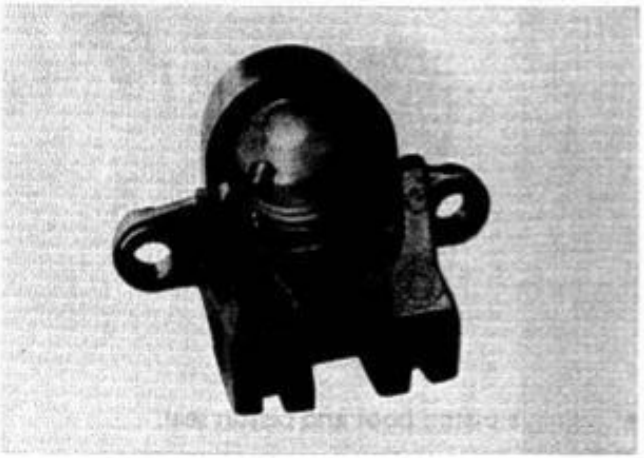

- Inspect the piston surface for any flaw or other damage.

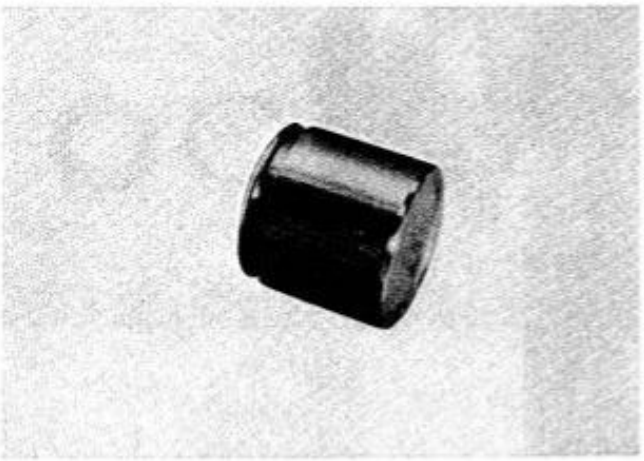

- Inspect the each rubber parts for damage and wear.

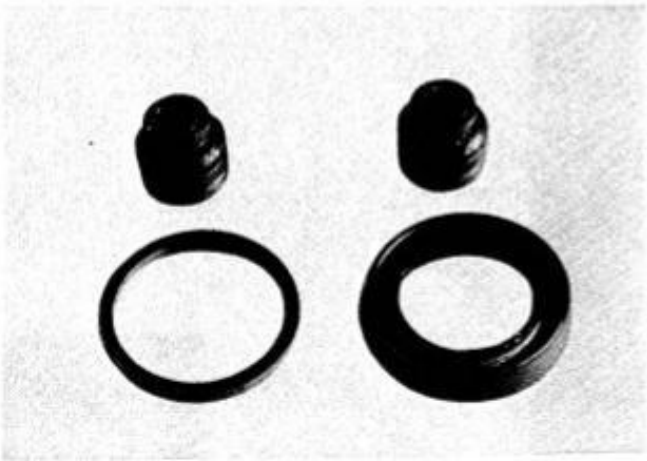

CALIPER REASSEMBLY

- Reassemble the caliper in the reverse orders of disassembly and by taking the following steps:

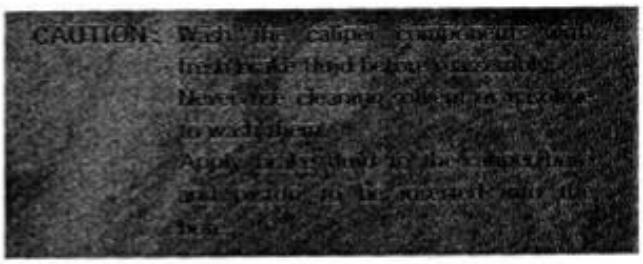

- Apply grease to the caliper axle bolts.

99000-25100	SUZUKI Silicone grease

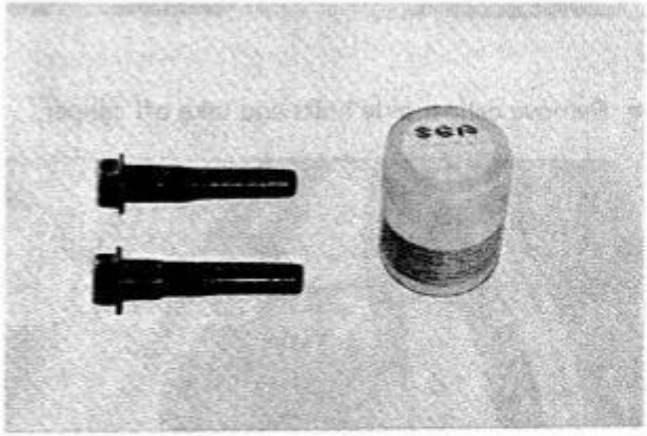

- Tighten the caliper axle bolts and caliper mounting bolts with specified torque.

	Tightening torque
Caliper axle bolt	40 - 55 N·m [4.0 - 5.5 kg-m 29.0 - 40.0 lb-ft]
Caliper bolt	20 - 40 N·m [2.0 - 4.0 kg-m 14.5 - 29.0 lb-ft]

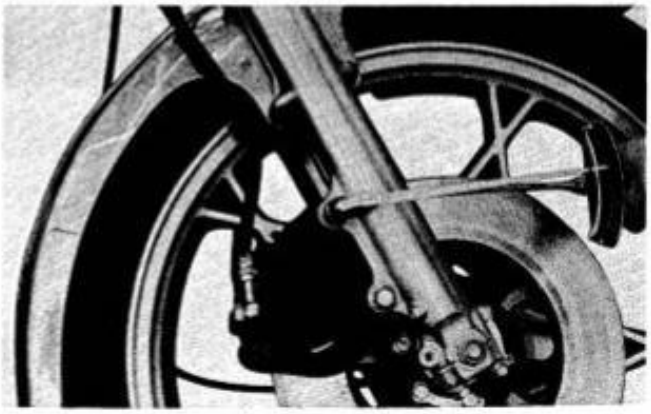

WIRE AND CABLE ROUTING

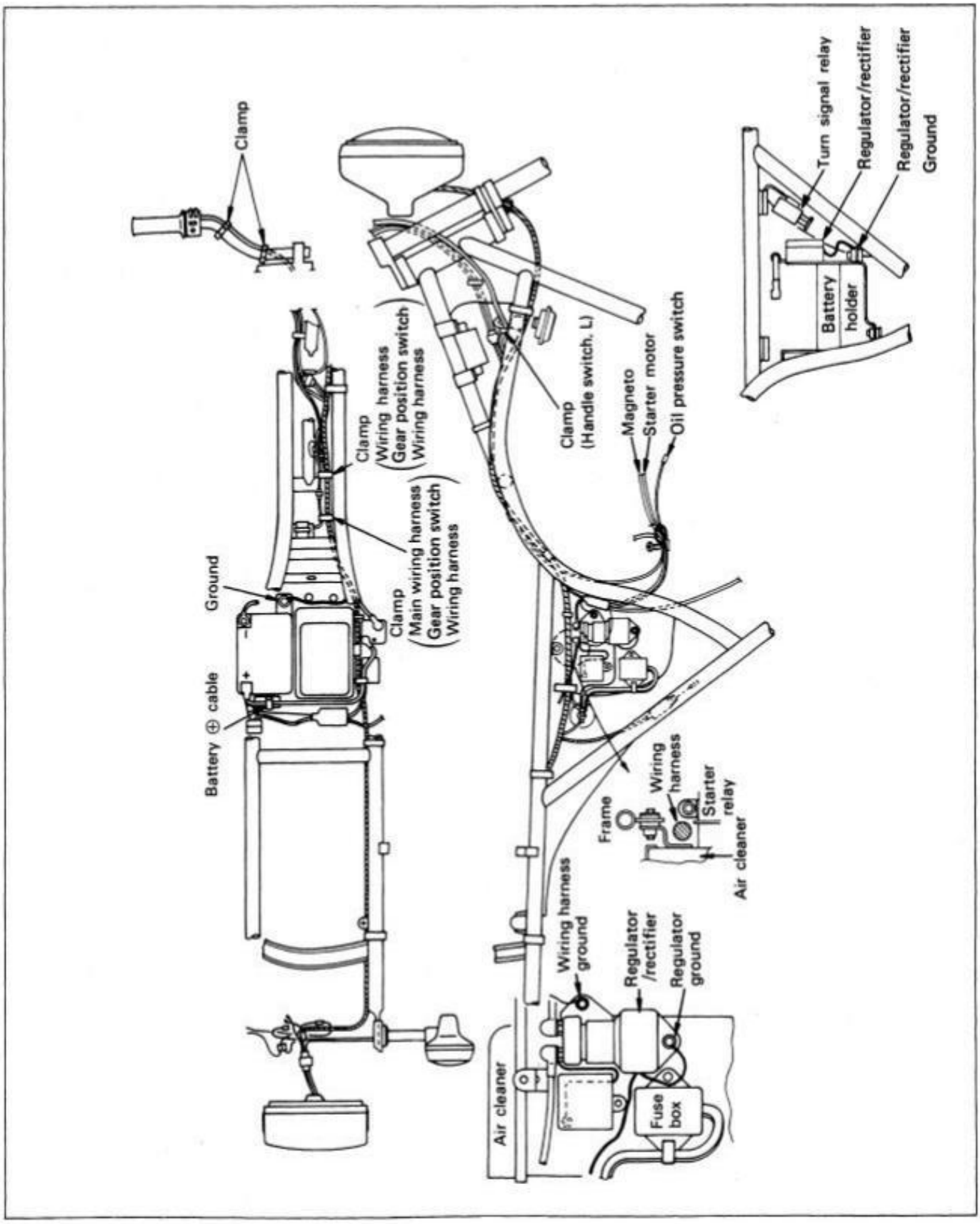

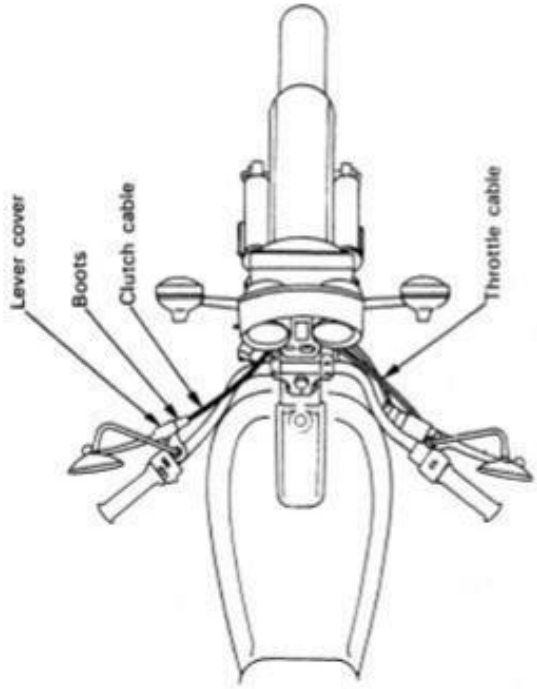
Lever cover
Boots
Clutch cable
Throttle cable

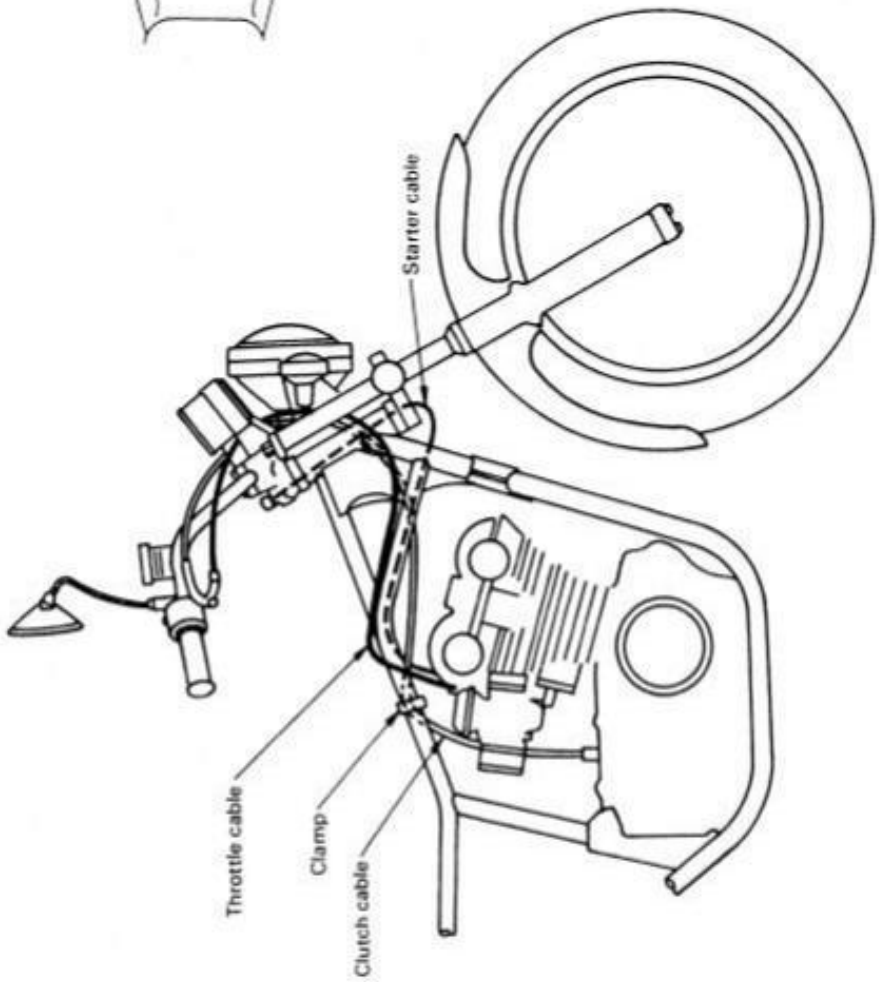
Starter cable
Throttle cable
Clamp
Clutch cable

WIRING DIAGRAM

For Canada

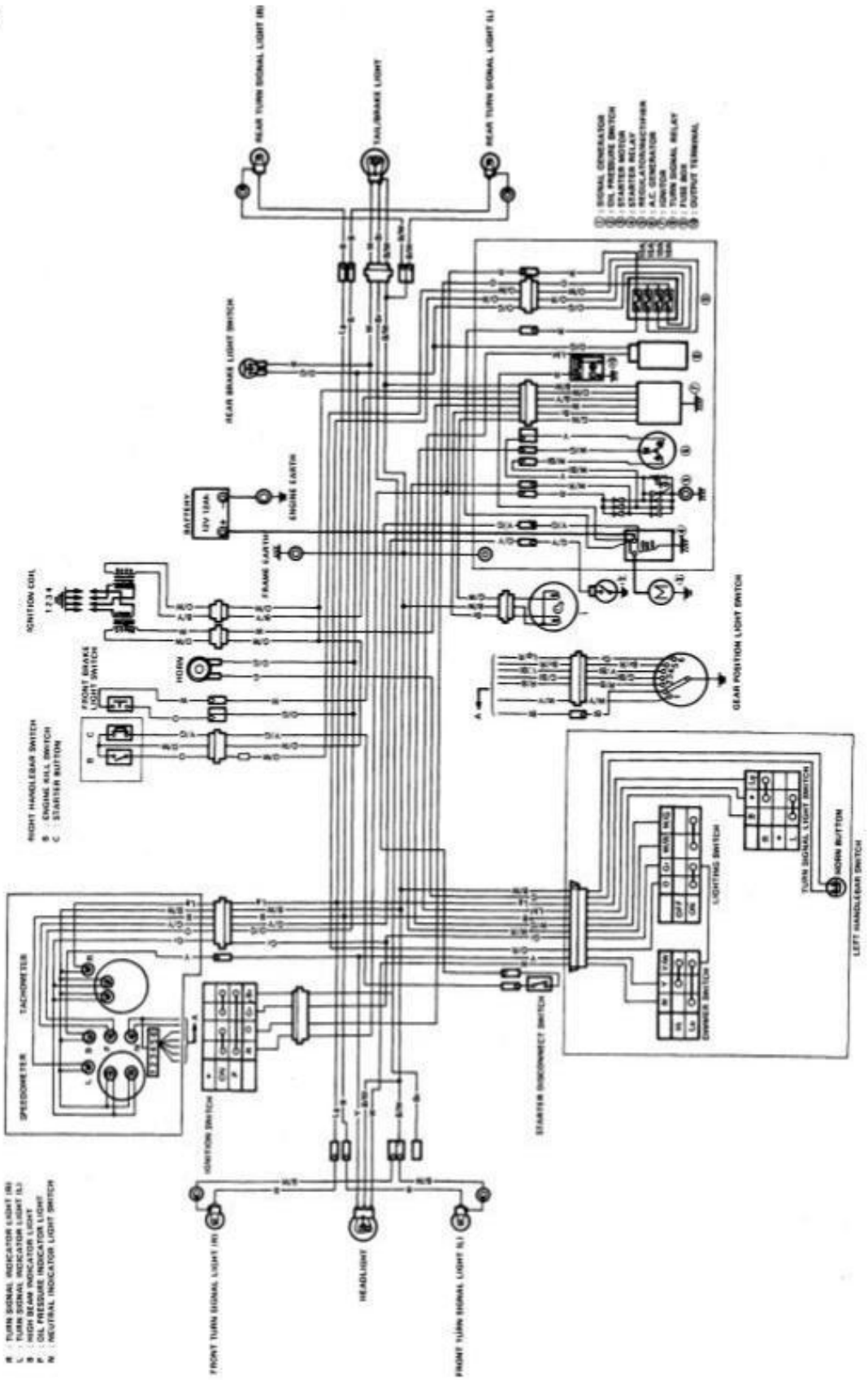

For England

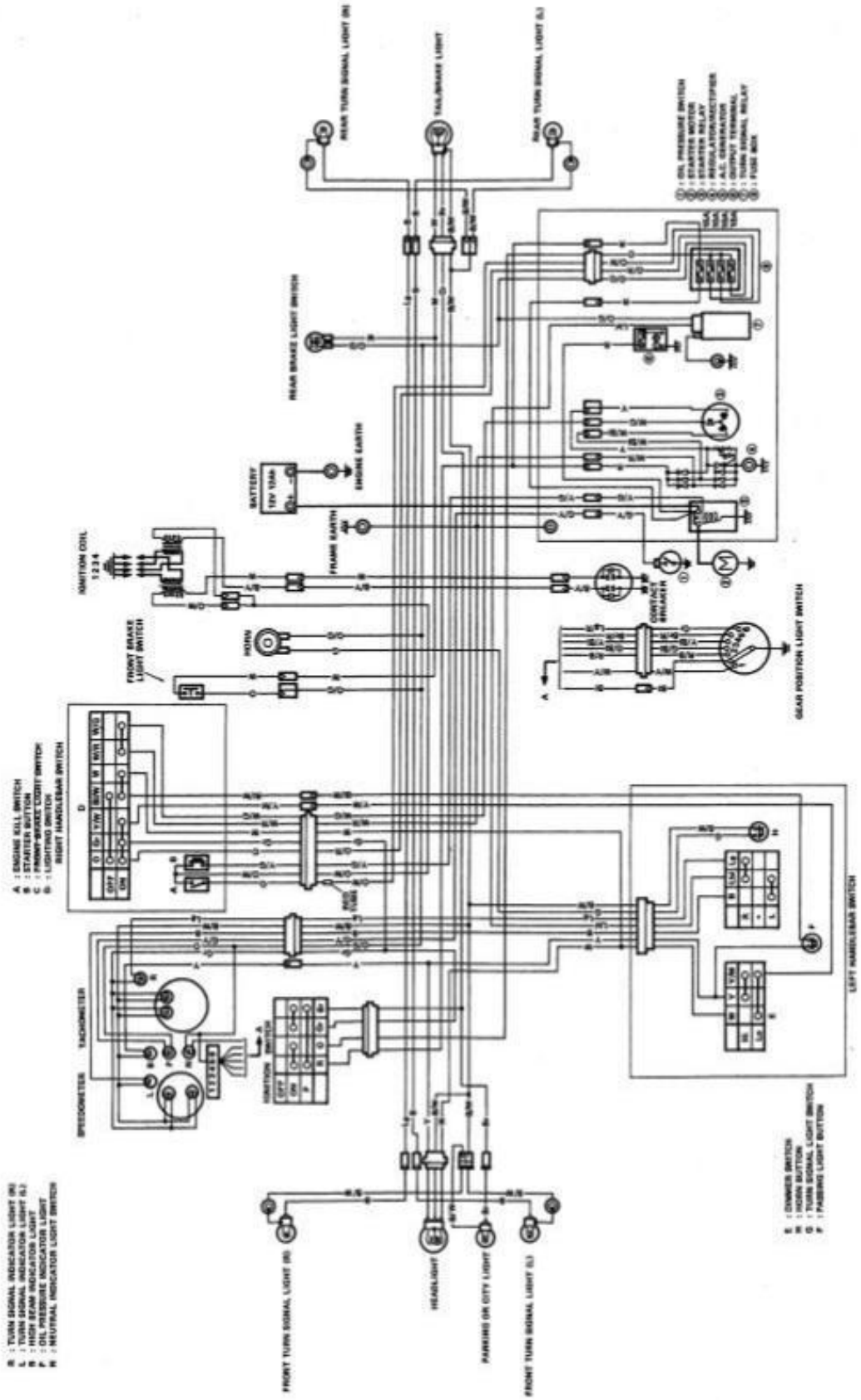
REAR TURN SIGNAL LIGHT (R)
TAIL/BRAKE LIGHT
REAR TURN SIGNAL LIGHT (L)
: OIL PRESSURE SWITCH
: STARTER MOTOR
: STARTER RELAY
: REGULATOR/RECTIFIER
: A.C. GENERATOR
: OUTPUT TERMINAL
: TURN SIGNAL RELAY
: FUSE BOX
REAR BRAKE LIGHT SWITCH
BATTERY
12V 10Ah
ENGINE EARTH
FRAME EARTH
IGNITION COIL
1 2 3 4
FRONT BRAKE LIGHT SWITCH
HORN
CONTACT BREAKER
GEAR POSITION LIGHT SWITCH
A : ENGINE KILL SWITCH
B : STARTER BUTTON
C : FRONT BRAKE CUT SWITCH
D : LIGHTING SWITCH
RIGHT HANDLEBAR SWITCH
OFF
ON
FUSE
SPEEDOMETER
TACHOMETER
IGNITION SWITCH
LEFT HANDLEBAR SWITCH
R : TURN SIGNAL INDICATOR LIGHT (R)
L : TURN SIGNAL INDICATOR LIGHT (L)
H : HIGH BEAM INDICATOR LIGHT
O : OIL PRESSURE INDICATOR LIGHT
N : NEUTRAL INDICATOR LIGHT SWITCH
FRONT TURN SIGNAL LIGHT (R)
HEADLIGHT
PARKING (OR CITY) LIGHT
FRONT TURN SIGNAL LIGHT (L)
E : DIMMER SWITCH
H : HORN BUTTON
G : TURN SIGNAL LIGHT SWITCH
F : PASSING LIGHT BUTTON

For Denmark, Finland, France, Italy, Switzerland, The Netherlands and West Germany

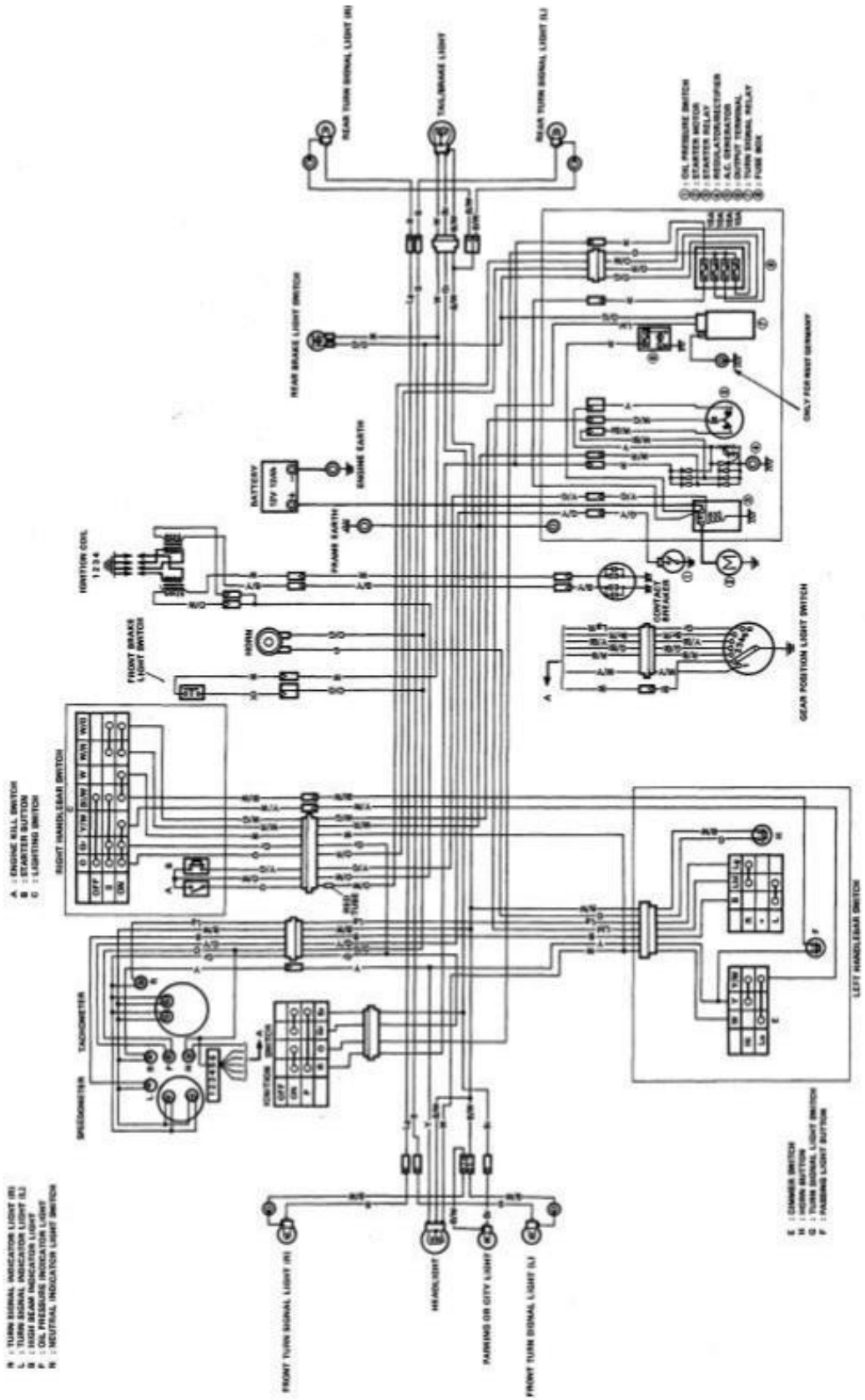

For Other markets

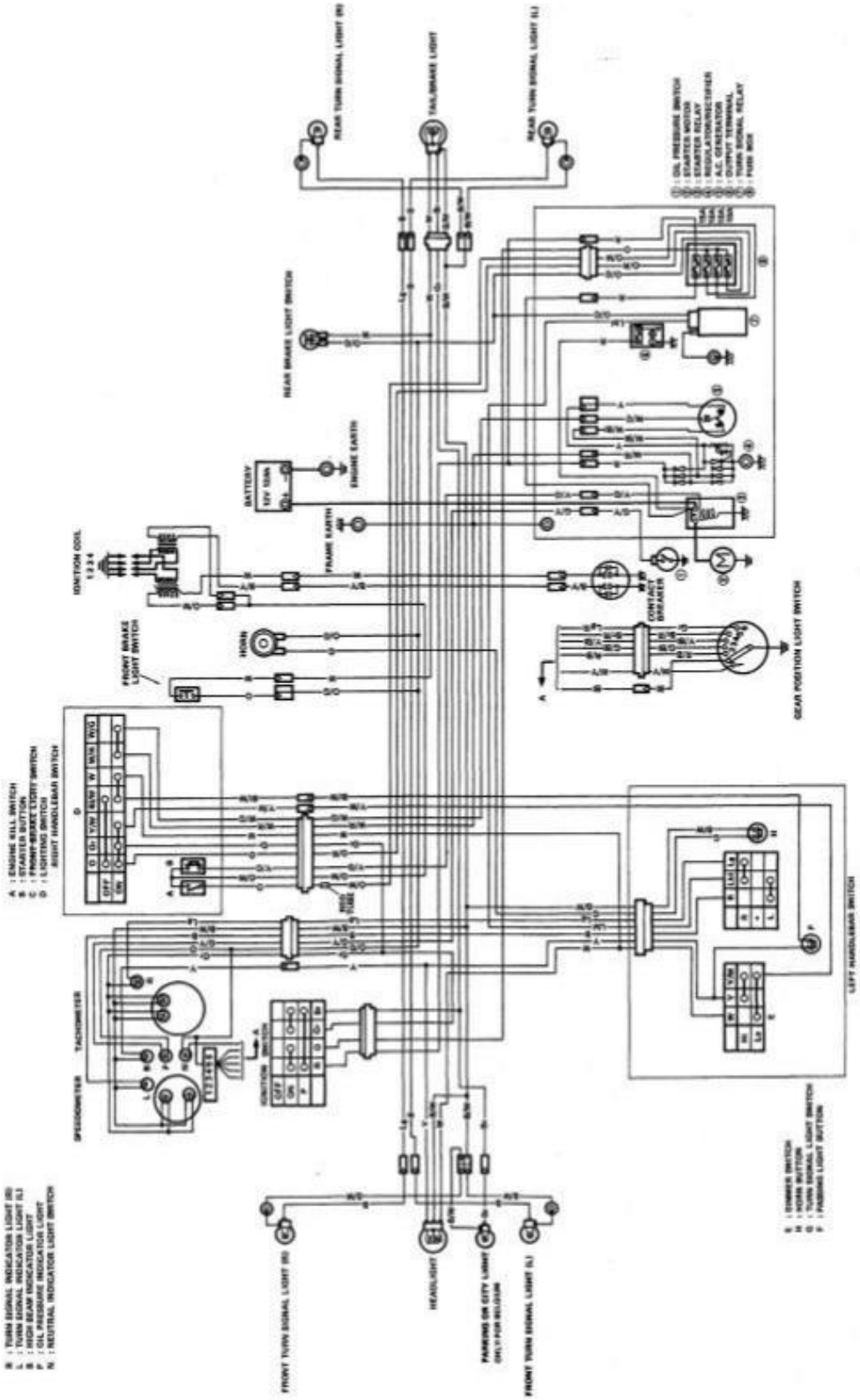

GS550LT

Right side

Left side

SPECIFICATIONS

DIMENSIONS AND DRY MASS

Overall length	2 190 mm (86.2 in)
Overall width	890 mm (35.0 in)
Overall height	1 215 mm (47.8 in)
Wheelbase	1 480 mm (58.3 in)
Ground clearance	160 mm (6.3 in)
Dry mass	205 kg (452 lbs)

ENGINE

Type	Four-stroke, air-cooled, DOHC
Number of cylinders	4
Bore	56.0 mm (2.205 in)
Stroke	55.8 mm (2.197 in)
Piston displacement	549 cm^3 (33.5 cu.in)
Compression ratio	8.6 : 1
Carburetor	MIKUNI BS32SS, four
Air cleaner	Polyurethane foam element
Starter system	Electric
Lubrication system	Wet sump

TRANSMISSION

Clutch		Wet multi-plate type
Transmission		6-speed constant mesh
Gearshift pattern		1-down 5-up
Primary reduction		1.977 (87/44)
Final reduction		3.400 (51/15)
Gear ratios,	Low	2.666 (32/12)
	2nd	1.777 (32/18)
	3rd	1.380 (29/21)
	4th	1.173 (27/23)
	5th	1.045 (23/22)
	Top	0.956 (22/23)

CHASSIS

Front suspension	Telescopic, oil dampened
Rear suspension	Swinging arm, oil dampened, spring 5-way adjustable
Steering angle	40° (right and left)
Caster	60° 00′
Trail	114 mm (4.49 in)
Turning radius	2.6 m (8.5 ft)
Front brake	Disc brake, twin
	Disc brake (Only for Canada)
Rear brake	Disc brake
Front tire size	3.25H19-4PR
Rear tire size	4.50H17-4PR
Front tire pressure	175 kPa (1.75 kg/cm², 25 psi) (Normal solo riding)
Rear tire pressure	200 kPa (2.00 kg/cm², 28 psi) (Normal solo riding)

ELECTRICAL

Ignition type	Battery ignition
	Transistorized (Only for Canada)
Ignition timing	17° B.T.D.C. below 1 500 r/min and 37° B.T.D.C. above 2 350 r/min
	15° B.T.D.C. below 1 500 r/min and 40° B.T.D.C. above 2 350 r/min (Only for Canada)
Spark plug	NGK B8ES or NIPPON DENSO W24ES-U
Spark plug gap	0.6 – 0.8 mm (0.024 – 0.031 in) both NGK and NIPPON DENSO
Battery	12V 43.2 kC (12Ah)/10HR
Generator	Three-phase A.C. generator
Fuse	10/10/10/15A

CAPACITIES

Fuel tank		13 L (3.4/2.9 US/Imp gal)
Engine oil	change	2.4 L (2.5/2.1 US/Imp qt)
	filter change	2.6 L (2.7/2.3 US/Imp qt)
	overhaul	2.7 L (2.8/2.4 US/Imp qt)
Front fork oil		217 ml (7.33/7.64 US/Imp oz) in each leg

* *Specifications subject to change without notice.*

SERVICE DATA

Please refer to the service data of GS550T except for the service data shown below.

TRANSMISSION

ITEM	STANDARD	LIMIT
Final reduction	3.400 (51/15)	—

WHEEL

ITEM	STANDARD		LIMIT
Tire size	Rear	4.50H17-4PR	—

SUSPENSION

Unit: mm (in)

ITEM	STANDARD		LIMIT
Front fork stroke	160 (6.30)		—
Front fork spring free length	Upper	—	153 (6.02)
	Lower	—	451 (17.76)
Front fork oil level	229 (9.02)		—

FUEL + OIL CAPACITY

ITEM	SPECIFICATION
Fuel tank	13 L (3.4/2.9 US/Imp gal)
Front fork oil capacity (each leg)	217 ml (7.33/7.64 US/Imp oz)

Unit: W

ITEM		SPECIFICATION										
		E-01	E-02	E-04	E-21	E-22	E-24	E-25	E-26	E-28	E-34	E-39
Headlight	HI	60	←	←	←	←	←	←	←	←	←	←
	LO	55	←	←	←	←	←	←	←	←	←	←
Parking or city light		/	4	←	←	←	/	4	←	/	4	←
Tail/Brake light		8/23	5/21	←	←	←	8/23	5/21	←	8/23	5/21	←
Turn signal light		23	21	←	←	←	23	21	←	23	21	←
Speedometer light		3.4	←	←	←	←	←	←	←	←	←	←
Tachometer light		3.4	←	←	←	←	←	←	←	←	←	←
Turn signal indicator light		3.4	←	←	←	←	←	←	←	←	←	←
High beam indicator light		3.4	←	←	←	←	←	←	←	←	←	←
Neutral indicator light		3.4	←	←	←	←	←	←	←	←	←	←
Oil pressure indicator light		3.4	←	←	←	←	←	←	←	←	←	←
Fuel meter light		3.4	←	←	←	←	←	←	←	←	←	←

* COUNTRY OR AREA

E-01 ..... General
E-02 ..... England
E-04 ..... France
E-21 ..... Belgium
E-22 ..... West Germany
E-24 ..... Australia
E-25 ..... The Netherlands
E-26 ..... Denmark
E-28 ..... Canada
E-34 ..... Italy
E-39 ..... Austria

FUEL COCK

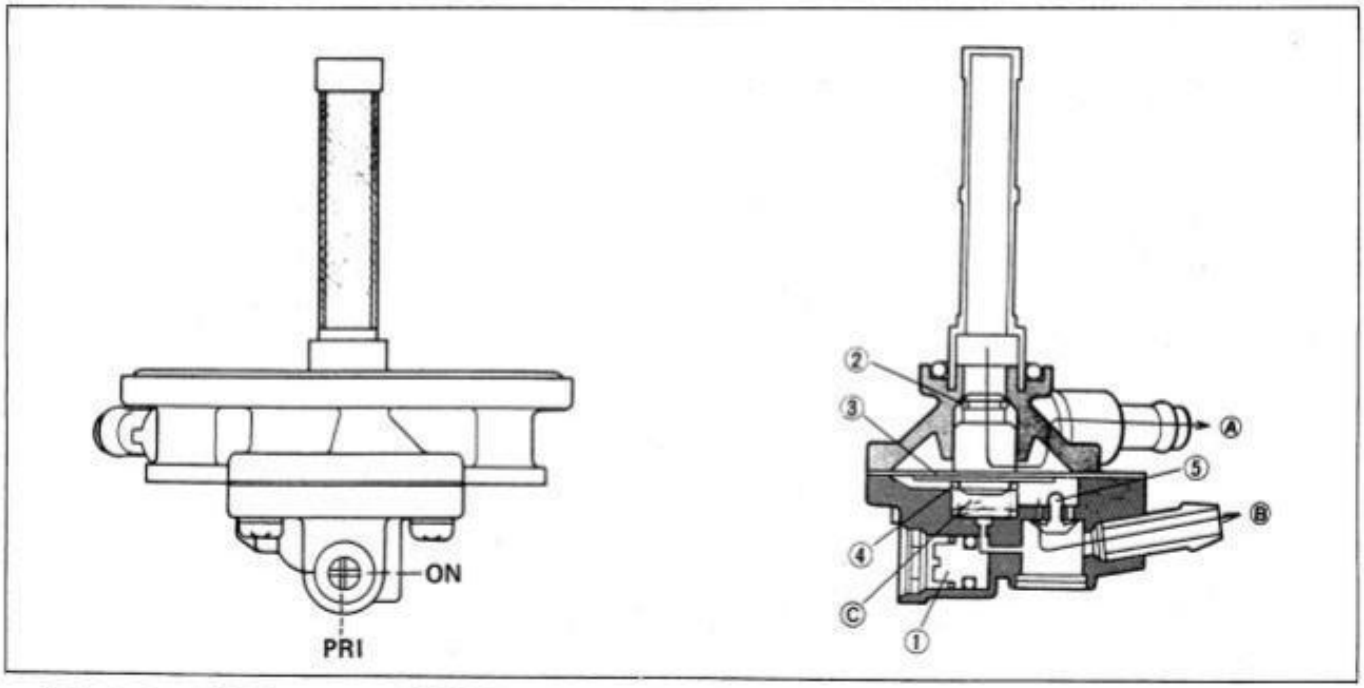

① Fuel valve ② O-ring ③ Diaphragm
④ Spring ⑤ One way valve
Ⓐ Fuel flow Ⓑ Vacuum

When the engine is not running with the valve in the ON position, the fuel valve is kept in the closed position by applying pressure utilizing a spring so that no fuel will flow to the carburetors. When the engine is engaged, a negative pressure is generated in the diaphragm chamber "Ⓒ" through the vacuum (negative pressure) pipe which is connected to the carburetors, and builds up a negative pressure which is higher than the spring pressure so that the diaphragm is forced to open the fuel valve and thus allow the fuel to flow to the carburetors.

On the other hand, setting the valve in the ON position keeps the air return orifice open. Negative pressure does not accumulate on the diaphragm at the time of engine stopping, and then the spring pressure actuates the diaphragm to move back to its original position and closes the fuel valve.

However, setting the valve in PRI position with a screwdriver causes the air return orifice to close, resulting in negative pressure in the chamber "Ⓒ" under the diaphragm. This negative pressure doesn't allow the fuel valve to close and therefore the fuel keeps flowing to the carburetors.

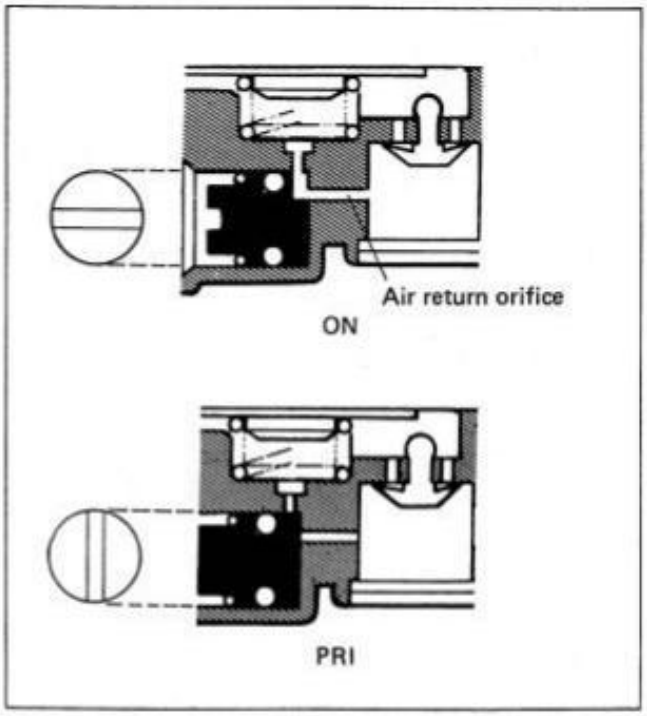

CAUTION: When starting the engine at PRI position, be sure to change the valve from PRI position to ON position immediately.

WIRE AND CABLE ROUTING

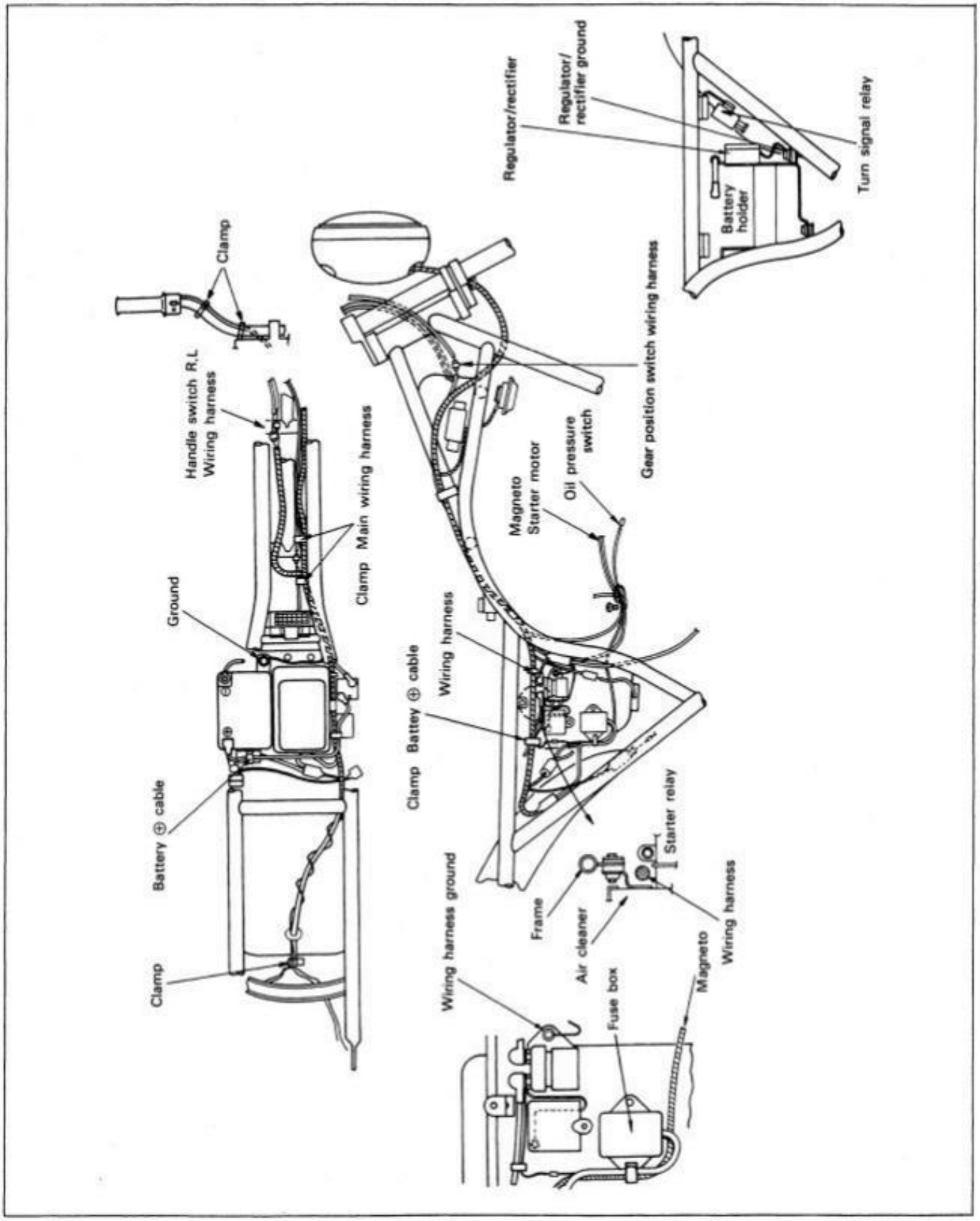

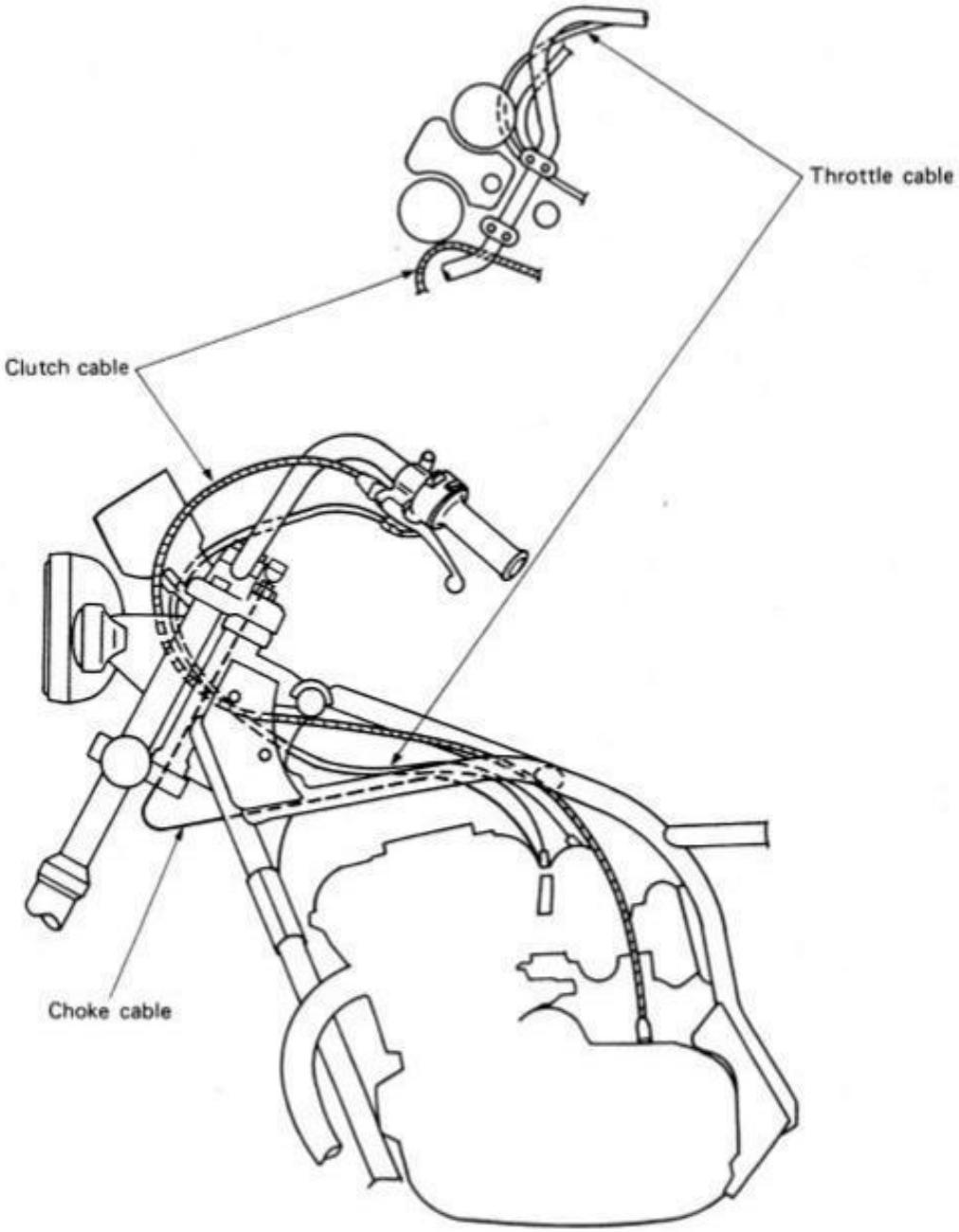
Throttle cable
Clutch cable
Choke cable

WIRING DIAGRAM

For Canada

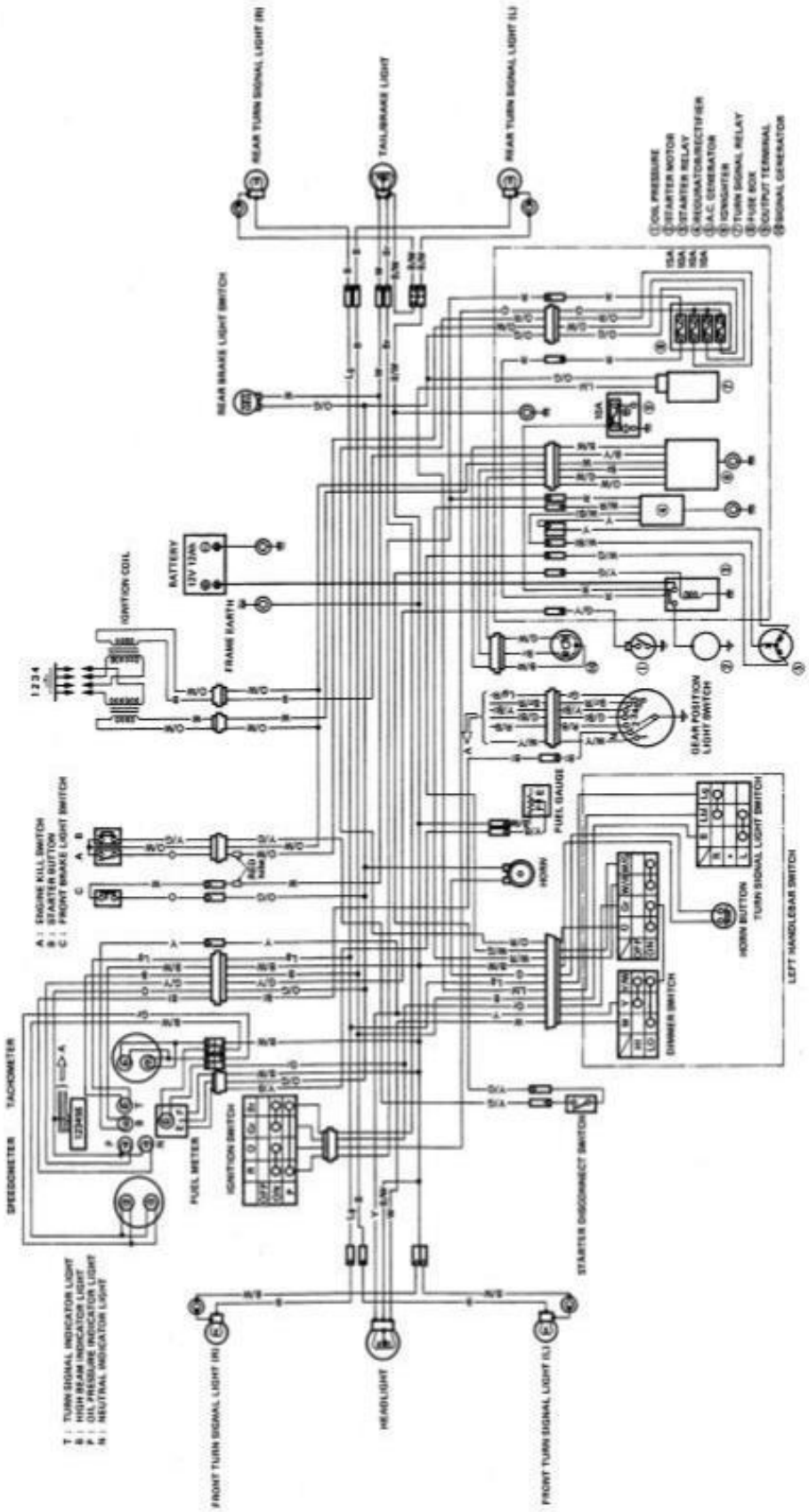

For Austria, Belgium, England, France, Italy and The Netherlands

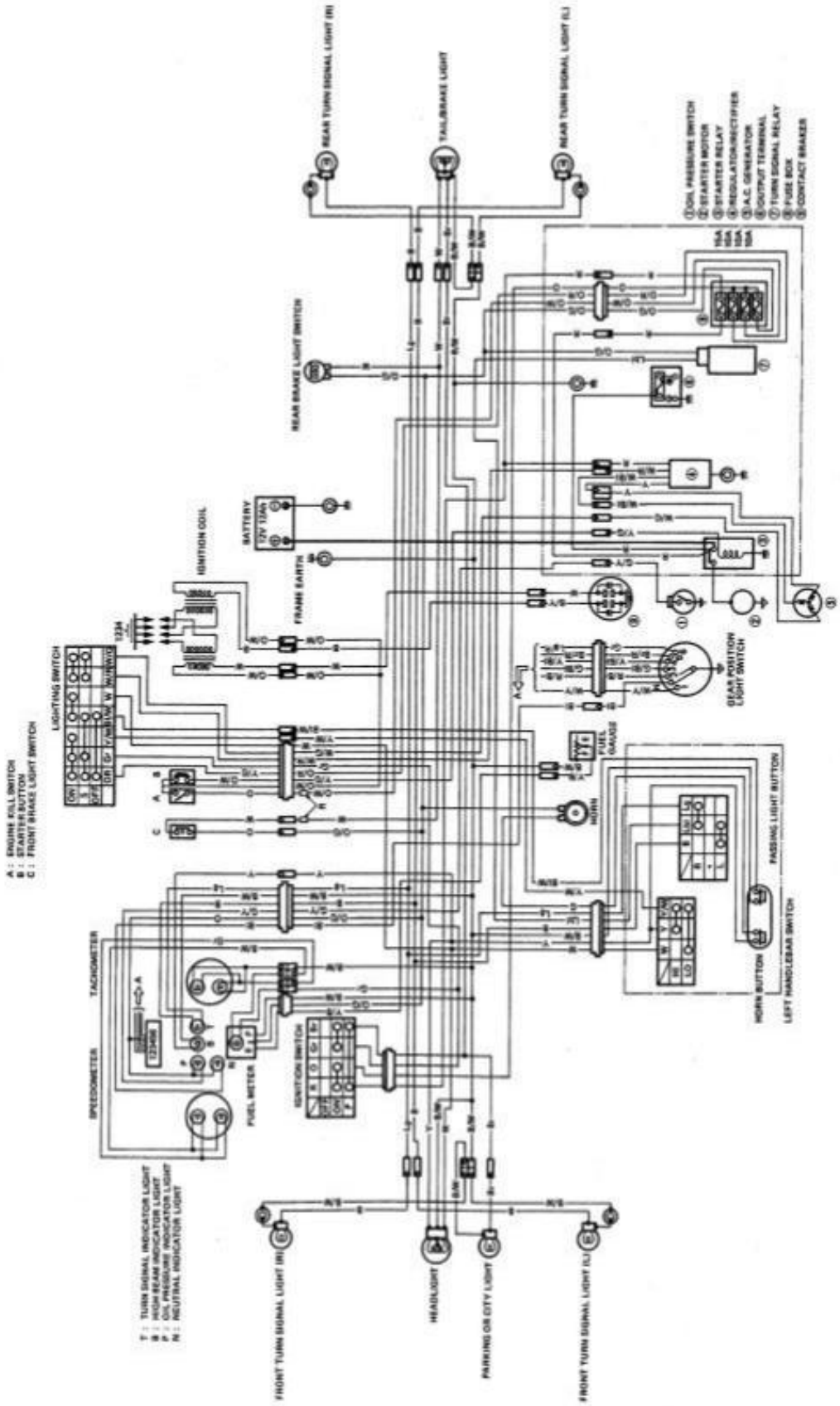

For Denmark and West Germany

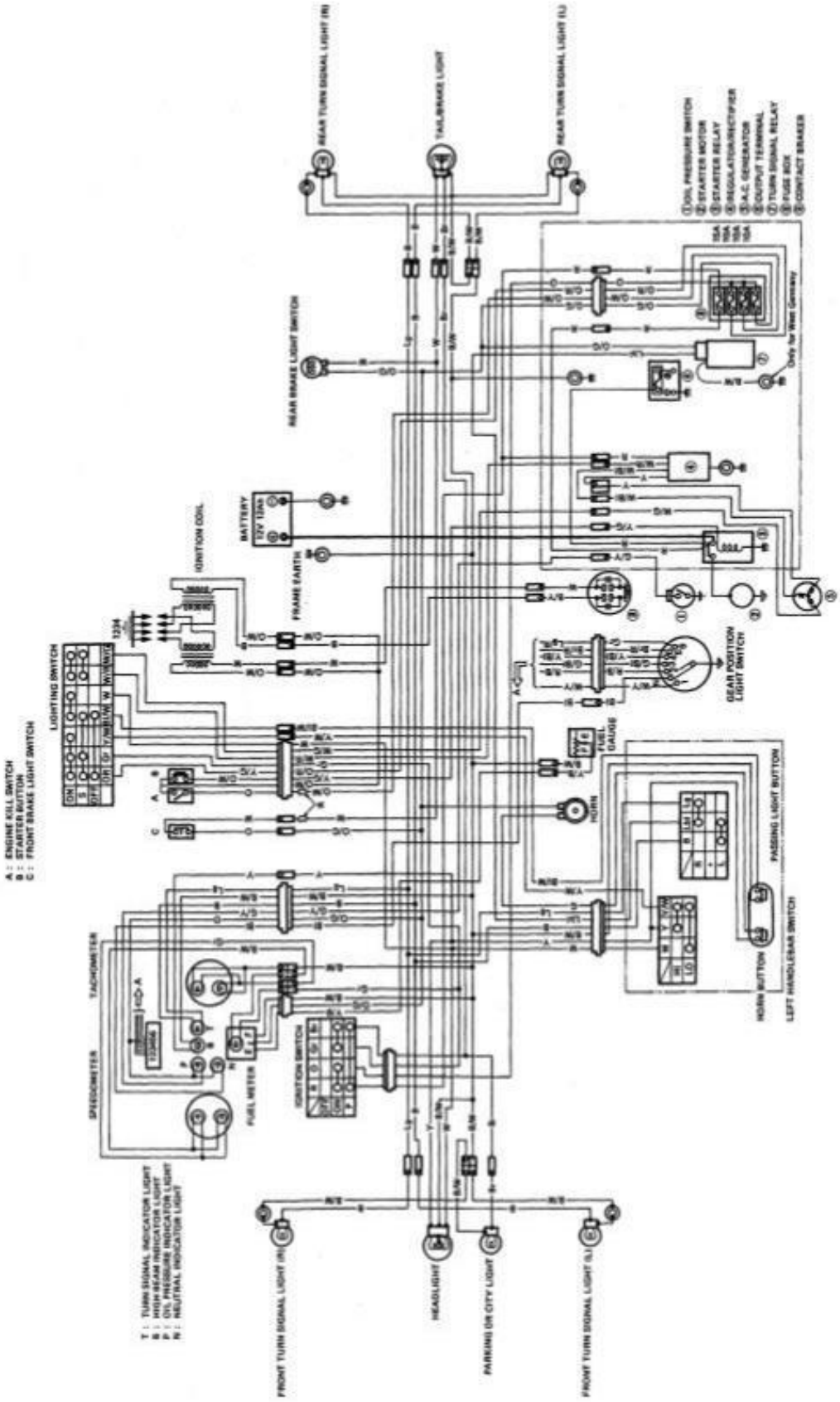

FOREWORD

The Suzuki GS550ET and GS550LT are new 1980 models and incorporate many refinements and technical changes from the previous model, the GS550EN. This new supplementary section has been produced to aid Suzuki mechanics in properly maintaining and repairing these model motorcycles, which incorporate so many new and innovative changes. These technical improvements have further enhanced the comfort, handling and overall performance of these outstanding models.
This supplement has been written primarily for the experienced Suzuki mechanic but will also be very useful even for the amateur, do-it-yourself mechanics. The entire manual should be thoroughly reviewed before any servicing is performed.

Please also refer to the sections of 1 through 13 of this Service Manual for all other areas of information not covered in this section.

IMPORTANT

All Suzuki motorcycles manufactured on or after January 1, 1978, were subject to Environmental Protection Agency emission regulations. These regulations set specific standards for emission control and also set new servicing requirements. This section contains pertinent information that should be carefully studied.

Further information concerning the EPA emission regulations and U.S. Suzuki's emission control program can be found in the U.S. SUZUKI EMISSION CONTROL PROGRAM MANUAL.

CONTENTS

GS550ET 316
SPECIFICATIONS 317
SERVICE DATA 319
TORQUE TABLE 329
SPECIAL MATERIALS 331
PERIODIC MAINTENANCE 333
MODIFICATIONS 334
EMISSION CONTROL & REGULATIONS 338
FUEL SYSTEM 342
CHARGING SYSTEM 359
FULL-TRANSISTORIZED IGNITION SYSTEM 363
STEERING STEM 365
FRONT MASTER CYLINDER 370
FRONT CALIPER 374
WIRE AND CABLE ROUTING 378
WIRING DIAGRAM 380

GS550LT 381
SPECIFICATIONS 382
SERVICE DATA 384
FUEL COCK 386
WIRE AND CABLE ROUTING 387
WIRING DIAGRAM 389

GS550T

Right side

Left side

SPECIFICATIONS

DIMENSIONS AND DRY MASS

Overall length	2 175 mm (85.6 in)
Overall width	850 mm (33.5 in)
Overall height	1 155 mm (45.5 in)
Wheelbase	1 435 mm (56.5 in)
Ground clearance	150 mm (5.9 in)
Dry mass	196 kg (432 lbs)

ENGINE

Type	Four-stroke, air-cooled, DOHC
Number of cylinders	4
Bore	56.0 mm (2.205 in)
Stroke	55.8 mm (2.197 in)
Piston displacement	549 cm^3 (33.5 cu.in)
Compression ratio	8.6 : 1
Carburetor	MIKUNI BS32SS, four
Air cleaner	Polyurethane foam element
Starter system	Electric
Lubrication system	Wet sump

TRANSMISSION

Clutch	Wet multi-plate type
Transmission	6-speed constant mesh
Gearshift pattern	1-down, 5-up
Primary reduction	1.977 (87/44)
Final reduction	3.333 (50/15)
Gear ratios, Low	2.666 (32/12)
2nd	1.777 (32/18)
3rd	1.380 (29/21)
4th	1.173 (27/23)
5th	1.045 (23/22)
Top	0.956 (22/23)
Drive chain	DAIDO D.I.D. 50HDL or TAKASAGO RK50SHO, 110 links

CHASSIS

Front suspension	Telescopic, oil dampened
Rear suspension	Swinging arm, oil dampened, spring 5-way adjustable
Steering angle	40° (right and left)
Caster	61° 00′
Trail	120 mm (4.72 in)
Turning radius	2.6 m (8.5 ft)

Front brake	Disc brake
Rear brake	Disc brake
Front tire size	3.25H19-4PR
Rear tire size	3.75H17-4PR
Front tire pressure	175 kPa (1.75 kg/cm², 25 psi) (Normal solo riding)
Rear tire pressure	200 kPa (2.00 kg/cm², 28 psi) (Normal solo riding)

ELECTRICAL

Ignition type	Transistorized
Ignition timing	15° B.T.D.C. below 1 500 r/min and 40° B.T.D.C. above 2 350 r/min
Spark plug	NGK B8ES or NIPPON DENSO W24ES-U
Spark plug gap	0.6 – 0.8 mm (0.024 – 0.031 in) both NGK and NIPPON DENSO
Battery	12V 43.2kC (12Ah)/10HR
Generator	Three-phase A.C. generator
Fuse	10/10/10/15A

CAPACITIES

Fuel tank including reserve		16 L (4.2 US gal)
	reserve	4.0 L (4.2 US qt)
Engine oil	change	2.4 L (2.5 US qt)
	filter change	2.6 L (2.7 US qt)
	overhaul	2.7 L (2.8 US qt)
Front fork oil		165 ml (5.58 US oz) in each leg

** Specifications subject to change without notice.*

SERVICE DATA

VALVES + GUIDES

Unit: mm (in)

ITEM	STANDARD		LIMIT
Valve Dia.	IN.	32.0 (1.26)	—
	EX.	27.0 (1.06)	—
Valve lift	IN.	7.2 (0.28)	—
	EX.	7.0 (0.27)	—
Valve clearance or Tappet clearance (when cold)	IN. & EX.	0.03 – 0.08 (0.001 – 0.003)	—
Valve guide to Valve stem clearance	IN.	0.025 – 0.055 (0.0009 – 0.0022)	0.35 (0.014)
	EX.	0.040 – 0.070 (0.0016 – 0.0028)	0.35 (0.014)
Valve guide I.D.	IN. & EX.	7.000 – 7.015 (0.2756 – 0.2762)	—
Valve stem O.D.	IN.	6.960 – 6.975 (0.2740 – 0.2746)	—
	EX.	6.945 – 6.960 (0.2734 – 0.2740)	—
Valve stem runout	IN. & EX.	—	0.05 (0.002)
Valve head thickness	IN. & EX.	—	0.5 (0.02)
Valve seat width	IN. & EX.	1.0 – 1.2 (0.04 – 0.05)	—
Valve head radial runout	IN. & EX.	—	0.03 (0.001)
Valve spring free length (IN. & EX.)	INNER	—	33.9 (1.33)
	OUTER	—	41.3 (1.63)
Valve spring tension (IN. & EX.)	INNER	29.3 – 34.0 kg (64.59 – 74.96 lbs) at length 23 mm (0.91 in)	—
	OUTER	50.4 – 58.3 kg (111.11 – 128.53 lbs) at length 27 mm (1.06 in)	—

CAMSHAFT + CYLINDER + HEAD

Unit: mm (in)

ITEM	STANDARD		LIMIT
Cam height	IN.	35.485 – 35.515 (1.3970 – 1.3982)	35.190 (1.3854)
	EX.	35.285 – 35.315 (1.3892 – 1.3904)	34.990 (1.3776)
Camshaft journal oil clearance	IN. & EX.	0.032 – 0.066 (0.0013 – 0.0026)	0.150 (0.0059)
Camshaft journal holder I.D.	IN. & EX.	22.012 – 22.025 (0.8666 – 0.8671)	——
Camshaft journal O.D.	IN. & EX.	21.959 – 21.980 (0.8645 – 0.8654)	——
Camshaft runout	IN. & EX.	——	0.1 (0.004)
Cam chain 20 pitch length		——	157.80 (6.213)
Cam chain pin (at arrow "3")		20th pin	——
Cylinder head distortion		——	0.2 (0.008)

PISTON + RING + CYLINDER

Unit: mm (in)

ITEM	STANDARD			LIMIT
Compression pressure	900 – 1 200 kPa (9 – 12 kg/cm², 128 – 171 psi)			650 kPa (6.5 kg/cm², 92.4 psi)
Compression pressure difference	——			200 kPa (2 kg/cm², 28 psi)
Piston to Cylinder clearance	0.050 – 0.060 (0.0020 – 0.0024)			0.120 (0.0047)
Cylinder bore	56.000 – 56.015 (2.2047 – 2.2053)			56.080 (2.2079)
Piston Dia.	55.945 – 55.960 (2.2026 – 2.2031) Measure the 15 (0.59) from piston skirt end.			55.880 (2.2000)
Cylinder distortion	——			0.2 (0.008)
Piston ring free end gap	1st	N	Approx. 6.5 (0.26)	5.2 (0.20)
	2nd	N	Approx. 6.5 (0.26)	5.2 (0.20)
Piston ring end gap	1st		0.10 – 0.30 (0.004 – 0.012)	0.7 (0.03)
	2nd		0.10 – 0.30 (0.004 – 0.012)	0.7 (0.03)
Piston ring groove clearance	1st		——	0.180 (0.0071)
	2nd		——	0.150 (0.0059)
Piston ring groove width	1st		1.21 – 1.23 (0.047 – 0.048)	——
	2nd		1.21 – 1.23 (0.047 – 0.048)	——
	Oil		2.51 – 2.53 (0.099 – 0.100)	——
Piston ring thickness	1st		1.175 – 1.190 (0.0463 – 0.0469)	——
	2nd		1.170 – 1.190 (0.0461 – 0.0469)	——
Piston pin bore I.D.	16.002 – 16.008 (0.6300 – 0.6302)			16.030 (0.6311)
Piston pin O.D.	15.995 – 16.000 (0.6297 – 0.6300)			15.980 (0.6291)

CRANKSHAFT

Unit: mm (in)

ITEM	STANDARD	LIMIT
Conrod small end I.D.	16.006 – 16.014 (0.6302 – 0.6305)	16.040 (0.6315)
Conrod deflection	——	3.0 (0.12)
Conrod big end side clearance	0.10 – 0.65 (0.004 – 0.026)	1.0 (0.039)
Crankshaft runout	——	0.05 (0.002)

OIL PUMP

Unit: mm (in)

ITEM	STANDARD	LIMIT
Oil pump reduction ratio	1.821 (87/44 x 35/38)	——
Oil pressure (at 60°C, 140°F)	Above: 10 kPa (0.1 kg/cm², 1.42 psi) Below: 50 kPa (0.5 kg/cm², 7.11 psi) at 3 000 r/min.	——
Tip clearance	——	0.20 (0.008)
Outer rotor clearance	——	0.25 (0.010)
Side clearance	——	0.15 (0.006)

CLUTCH

Unit: mm (in)

ITEM	STANDARD	LIMIT
Clutch cable play	2 – 3 (0.08 – 0.12)	——
Drive plate thickness	2.9 – 3.1 (0.11 – 0.12)	2.6 (0.10)
Drive plate claw width	11.8 – 12.0 (0.46 – 0.47)	11.0 (0.43)
Drive plate distortion	——	0.2 (0.008)
Driven plate thickness	1.6 ± 0.06 (0.06 ± 0.002)	——
Driven plate distortion	——	0.1 (0.004)
Clutch spring free length	——	35.9 (1.41)
Primary drive to Driven gear backlash	0 – 0.03 (0 – 0.001)	0.08 (0.003)

TRANSMISSION

Unit: mm (in)

ITEM	STANDARD		LIMIT
Primary reduction	1.977 (87 / 44)		—
Final reduction	3.333 (50 / 15)		—
Gear ratios	Low	2.666 (32 / 12)	—
	2nd	1.777 (32 / 18)	—
	3rd	1.380 (29 / 21)	—
	4th	1.173 (27 / 23)	—
	5th	1.045 (23 / 22)	—
	Top	0.956 (22 / 23)	—
Gear backlash	Low	0.04 (0.002)	0.09 (0.004)
	2nd	0.04 (0.002)	0.09 (0.004)
	3rd	0.04 (0.002)	0.09 (0.004)
	4th	0.04 (0.002)	0.09 (0.004)
	5th	0.05 – 0.10 (0.002 – 0.004)	0.15 (0.006)
	Top	0.05 – 0.10 (0.002 – 0.004)	0.15 (0.006)
Shift fork to Groove clearance	0.1 – 0.3 (0.004 – 0.012)		0.5 (0.020)
Shift fork groove width	5.5 – 5.6 (0.217 – 0.220)		—
Shift fork thickness	5.3 – 5.4 (0.195 – 0.199)		—
Drive chain	Type	D.I.D.: 50HDL TAKASAGO: RK50SHO	—
	Links	110	—
	20 pitch length	—	320.0 (12.60)
Drive chain slack	20 – 30 (0.8 – 1.2)		—

CARBURETOR

ITEM		SPECIFICATION
Carburetor type		MIKUNI BS32SS
Bore size		32 (1.26)
I.D. No.		47070
Idle r/min.		1 100 ± 100 r/min.
Fuel level		5.0 ± 0.5 (0.20 ± 0.02)
Float height		22.4 ± 1.0 (0.88 ± 0.04)
Main jet	(M.J.)	#92.5
Main air jet	(M.A.J.)	1.6
Jet needle	(J.N.)	4BEL2
Needle jet	(N.J.)	X-6
Pilot jet	(P.J.)	#40
By pass	(B.P.)	0.9, 0.7, 0.7
Pilot outlet	(P.O.)	0.7
Valve seat	(V.S.)	2.0
Starter jet	(G.S.)	35
Pilot screw	(P.S.)	PRE-SET
Throttle cable play		0.5 – 1.0 (0.02 – 0.04)

ELECTRICAL

Unit. mm (in)

ITEM	SPECIFICATION	
Ignition timing	15° B.T.D.C. Below 1 500 ± 100 r/min. and 40° B.T.D.C. Above 2 350 ± 100 r/min.	
Firing order	1 · 2 · 4 · 3	
Spark plug	Type	NGK: B8ES N.D.: W24ES-U
	Gap	0.6 – 0.8 (0.024 – 0.031)
Spark performance	Over 8 (0.3) at 1 atm	
Signal coil resistance	Approx.	G/W–B/W 60 – 80Ω
Ignition coil resistance	Primary	O/W–W or B/Y Approx. 3.5 – 4.5 Ω
	Secondary	Plug cap – Plug cap Approx. 35 – 38 kΩ
Generator No-Load voltage	More than 80 V (AC) at 5 000 r/min.	
Regulated voltage	14.0 – 15.5 V at 5 000 r/min.	
Starter motor	Brush length	Limit: 9 (0.35)
	Commutator under cut	Limit: 0.2 (0.008)
Starter relay resistance	3 – 4 Ω	
Battery	Type designation	YB10L – A2
	Capacity	12V 43.2kC (12Ah)/10HR
	Standard electrolyte S.G.	1.28 at 20°C (68°F)
Fuse size	Main	15A
	Headlight	10A
	Turn signal	10A
	Ignition	10A

BRAKE + WHEEL

Unit: mm (in)

ITEM		STANDARD	LIMIT
Rear brake pedal height		10 (0.4)	—
Brake disc thickness	Front	6.7 ± 0.2 (0.26 ± 0.008)	6.0 (0.24)
	Rear	6.7 ± 0.2 (0.26 ± 0.008)	6.0 (0.24)
Brake disc runout		—	0.30 (0.012)
Master cylinder bore	Front	14.000 – 14.043 (0.5512 – 0.5529)	—
	Rear	14.000 – 14.043 (0.5512 – 0.5529)	—
Master cylinder piston dia.	Front	13.941 – 13.968 (0.5489 – 0.5499)	—
	Rear	13.957 – 13.984 (0.5495 – 0.5506)	—
Brake caliper cylinder bore	Front	42.860 – 42.899 (1.6874 – 1.6889)	—
	Rear	38.180 – 38.256 (1.5031 – 1.5061)	—
Brake caliper piston dia.	Front	42.785 – 42.810 (1.6844 – 1.6854)	—
	Rear	38.098 – 38.148 (1.4999 – 1.5019)	—
Wheel rim runout	Axial	—	2.0 (0.08)
	Radial	—	2.0 (0.08)
Wheel axle runout	Front	—	0.25 (0.010)
	Rear	—	0.25 (0.010)
Tire size	Front	3.25H 19 4PR	—
	Rear	3.75H 18 4PR	—
Tire tread depth	Front	—	1.6 (0.06)
	Rear	—	2.0 (0.08)

SUSPENSION

Unit: mm (in)

ITEM	STANDARD		LIMIT
Front fork stroke	150 (5.9)		——
Front fork spring free length	Upper	——	93.0 (3.66)
	Lower	——	393.0 (15.47)
Front fork oil level	204 (8.03)		——
Rear wheel travel	100 (3.9)		——
Swinging arm pivot shaft runout	——		0.3 (0.012)

FUEL + OIL + CAPACITY

Unit: mm (in)

ITEM	SPECIFICATION	
Fuel type	Use only unleaded or low-lead type gasoline of at least 85–95 pump octane ($\frac{R+M}{2}$ method) or 89 octane or higher rated by the Research Method.	
Fuel tank including reserve	16 L (4.2 US gal)	
reserve	4.0 L (4.2 US qt)	
Engine oil type	SAE 10W/40	
Engine oil capacity	Change	2 400 ml (2.5 US qt)
	Filter change	2 600 ml (2.7 US qt)
	Overhaul	2 700 ml (2.8 US qt)
Front fork oil type	Mixture ratio SAE 10W/30 : SAE 5W/20 = 1 : 1	
Front fork oil capacity (each leg)	165 ml (5.58 US oz)	
Brake fluid type	DOT3 or DOT4	

TIRE PRESSURE

COLD INFLATION TIRE PRESSURE	NORMAL RIDING						CONTINUOUS HIGH SPEED RIDING					
	SOLO RIDING			DUAL RIDING			SOLO RIDING			DUAL RIDING		
	kPa	kg/cm²	psi	kPa	kg/cm²	psi	kPa	kg/cm²	psi	kPa	kg/cm²	psi
FRONT	175	1.75	25	175	1.75	25	200	2.00	28	200	2.00	28
REAR	200	2.00	28	225	2.25	32	225	2.25	32	280	2.80	40

WATTAGE

Unit: W (CP)

ITEM		SPECIFICATION
Headlight	HI	50
	LO	40
Tail/Brake light		8/23 (3/32)
Turn signal light		23 (32)
Speedometer light		3.4
Tachometer light		3.4
Turn signal indicator light		3.4
High beam indicator light		3.4
Neutral indicator light		3.4
Oil pressure indicator light		3.4
Gear position indicator light		1.1

TORQUE TABLE

ENGINE

ITEM	N·m	kg·m	lb·ft
Cylinder head cover bolt	7 – 11	0.7 – 1.1	5.0 – 8.0
Cylinder head bolt	7 – 11	0.7 – 1.1	5.0 – 8.0
Cylinder head nut	23 – 27	2.3 – 2.7	16.5 – 19.5
Camshaft bearing cap bolt	8 – 12	0.8 – 1.2	6.0 – 8.5
Camshaft sprocket bolt	8 – 11	0.8 – 1.1	6.0 – 8.0
Contact breaker cam bolt	18 – 28	1.8 – 2.8	13.0 – 20.0
Cam chain tensioner lock nut	10 – 12	1.0 – 1.2	7.0 – 8.5
Generator rotor bolt	60 – 70	6.0 – 7.0	43.5 – 50.5
Advance governor bolt	18 – 23	1.8 – 2.3	13.0 – 16.5
Starter motor bolt	4 – 7	0.4 – 0.7	3.0 – 5.0
Starter clutch bolt	15 – 20	1.5 – 2.0	11.0 – 14.5
Clutch sleeve hub nut	40 – 60	4.0 – 6.0	29.0 – 43.5
Clutch spring bolt	6 – 10	0.6 – 1.0	4.5 – 7.0
Oil strainer screw	4 – 7	0.4 – 0.7	3.0 – 5.0
Gear shifting cam stopper spring holder bolt	18 – 28	1.8 – 2.8	13.0 – 20.0
Gear shift arm stopper bolt	15 – 23	1.5 – 2.3	11.0 – 16.5
Crankcase bolt (6 mm)	6 – 10	0.6 – 1.0	4.5 – 7.0
Crankcase bolt (8 mm)	18 – 22	1.8 – 2.2	13.0 – 16.0
Engine mounting nut (8 mm)	13 – 23	1.3 – 2.3	9.5 – 16.5
Engine mounting nut (10 mm)	25 – 45	2.5 – 4.5	18.0 – 32.5
Exhaust pipe bolt	9 – 14	0.9 – 1.4	6.5 – 10.0
Muffler bolt	18 – 28	1.8 – 2.8	13.0 – 20.0
Gear shift lever bolt	6 – 10	0.6 – 1.0	4.5 – 7.0
Engine sprocket nut	50 – 70	5.0 – 7.0	36.0 – 50.5

CHASSIS

ITEM	N·m	kg·m	lb·ft
Handlebar clamp bolt	12 – 20	1.2 – 2.0	8.5 – 14.5
Steering stem upper clamp bolt	15 – 25	1.5 – 2.5	11.0 – 18.0
Front fork upper bracket bolt (R, L)	20 – 30	2.0 – 3.0	14.5 – 21.5
Front fork lower bracket bolt (R, L)	20 – 30	2.0 – 3.0	14.5 – 21.5
Front fork cap bolt (R, L)	15 – 30	1.5 – 3.0	11.0 – 21.5
Steering stem head nut	36 – 52	3.6 – 5.2	26.0 – 37.5
Front fork axle holder nut	15 – 25	1.5 – 2.5	11.0 – 18.0
Front axle shaft nut	36 – 52	3.6 – 5.2	26.0 – 37.5
Swinging arm pivot nut	50 – 80	5.0 – 8.0	36.0 – 58.0
Rear torque link nut	20 – 30	2.0 – 3.0	14.5 – 21.5
Rear axle nut	50 – 80	5.0 – 8.0	36.0 – 58.0
Rear shock absorber nut	20 – 30	2.0 – 3.0	14.5 – 21.5
Footrest bolt	27 – 43	2.7 – 4.3	19.5 – 31.0
Front brake caliper mounting bolt	20 – 40	2.0 – 4.0	14.5 – 29.0
Front and rear brake disc plate bolt	15 – 25	1.5 – 2.5	11.0 – 18.0
Front brake caliper axle bolt	40 – 55	4.0 – 5.5	29.0 – 40.0
Front brake master cylinder mounting bolt	5 – 8	0.5 – 0.8	3.5 – 6.0
Front and rear brake hose union bolt	13 – 18	1.3 – 1.8	9.5 – 13.0
Front and rear brake air bleeder bolt	6 – 9	0.6 – 0.9	4.5 – 6.5
Rear brake caliper mounting bolt	20 – 30	2.0 – 3.0	14.5 – 21.5
Rear brake caliper axle bolt	25 – 35	2.5 – 3.5	18.0 – 25.5
Rear brake master cylinder mounting bolt	15 – 25	1.5 – 2.5	11.0 – 18.0

SPECIAL MATERIALS

The materials listed below are needed for maintenance work on the GS550 series, and should be kept on hand for ready use. They supplement such standard materials as cleaning fluids, lubricants, emery cloth and the like. How to use them and where to use them are described in the text of this manual.

Material	Part
 99000-32040 THREAD LOCK CEMENT	* Carburetor bracket screw . . . . . 8 pcs. * Oil filter cap nut . . . . . 3 pcs. * Front fork damper rod bolt . . . . . 2 pcs. * Cam shaft end cap screw . . . . . 8 pcs.
 99104-32050 THREAD LOCK "1363C"	* Generator lead wire guide screw . . . . . 3 pcs. * Generator stator securing screw . . . . . 3 pcs. * Gearshift cam stopper bolt . . . . . 2 pcs. * Countershaft bearing retainer . . . . . 4 pcs. * Starter motor securing bolt . . . . . 2 pcs. * Gearshift fork shaft stopper screw . . . . . 1 pc. * Engine oil pump set screw . . . . . 4 pcs.
 99104-32020 THREAD LOCK SUPER "1361A"	* Gearshift cam retainer screw . . . . . 1 pc. * Cam chain sprocket allen bolt . . . . . 2 pcs. * Cam chain guide bolt . . . . . 1 pc. * Starter clutch allen bolt . . . . . 3 pcs. * Gearshift stopper . . . . . 1 pc. * Muffler cover screw . . . . . 4 pcs.
 99104-32090 THREAD LOCK SUPER "1332B"	* Generator rotor securing bolt . . . . . 1 pc.

Material	Part
 99000-25010 SUZUKI SUPER GREASE "A"	• Oil seals • Throttle grip • Cables (speedometer and tachometer) • Clutch release mechanism • Gearshift lever linkage and shaft • Speedometer gearbox • Wheel bearings • Swinging arm bearing and dust seal • Rear brake cam • Brake pedal shaft • Governor link • Centerstand spacer • Steering stem bearings
 99104-31140 SUZUKI BOND No. 1207B	• Mating surfaces of upper and lower crankcase.
 99000-25100 SUZUKI SILICONE GREASE	• Apply to caliper axle bolt
 99000-25140 SUZUKI MOLY PASTE	• Valve stem • Cam shaft • Chain tensioner adjuster shaft

PERIODIC MAINTENANCE

IMPORTANT: The periodic maintenance intervals and service requirements have been established in accordance with EPA regulations. Following these instructions will ensure that the motorcycle will not exceed emission standards and it will also enhance the reliability and performance of the motorcycle.

NOTE:
More frequent servicing may be performed on motorcycles that are used under severe conditions. However, it is not necessary to maintain emission level compliance.

The chart below lists the recommended intervals for all the required periodic service work necessary to keep the motorcycle operating at peak performance and to maintain proper emission levels. Mileages are expressed in terms of kilometers, miles and time for your convenience.

PERIODIC MAINTENANCE SCHEDULE

INTERVAL: THIS INTERVAL SHOULD BE JUDGED BY ODOMETER READING OR MONTHS WHICHEVER COMES FIRST	Mile	600	4 000	7 500	11 000	15 000
	Km	1 000	6 000	12 000	18 000	24 000
	Month	2	12	24	36	48
Battery (specific gravity of electrolyte)		–	I	I	I	I
Cylinder head nuts and exhaust pipe bolts		T	T	T	T	T
Air cleaner element		–	C	C	C	C
Tappet clearance		I	I	I	I	I
Spark plugs		–	C	R	C	R
Fuel line		Replace every two years				
Engine oil and oil filter		R	R	R	R	R
Carburetor idle r/min		I	I	I	I	I
Clutch		I	I	I	I	I
Drive chain		I	I	I	I	I
		Clean and lubricate every 600 miles (1 000 km)				
Brake hose		Replace every two years				
Brake		I	I	I	I	I
Tires		I	I	I	I	I
Steering stem		I	I	I	I	I
Chassis bolts and nuts		T	T	T	T	T

NOTE: T = Tighten, I = Inspect, R = Replace, C = Clean

MODIFICATIONS

ENGINE

- On the engine starter system, the combines electric and kick starter system has been replaced by the electric starter system; that is, the kick starter system is discontinued. As a result, generator has been replaced by high performance type.

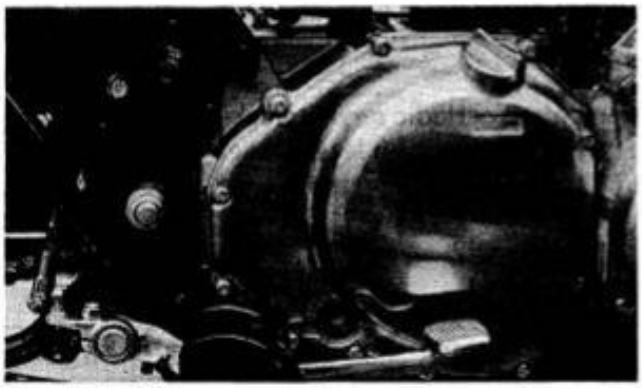

GS550T MODEL

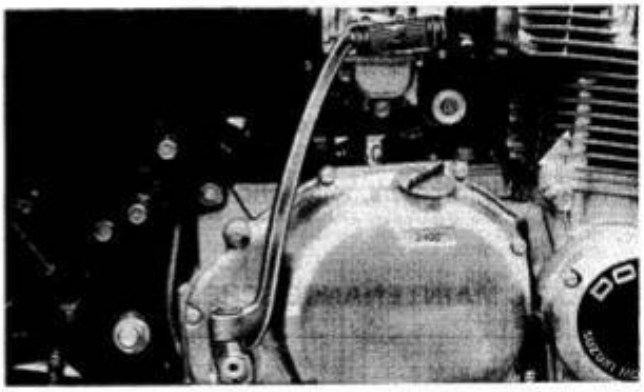

GS550N MODEL

- No. 2 and No. 3 exhaust pipes are connected.

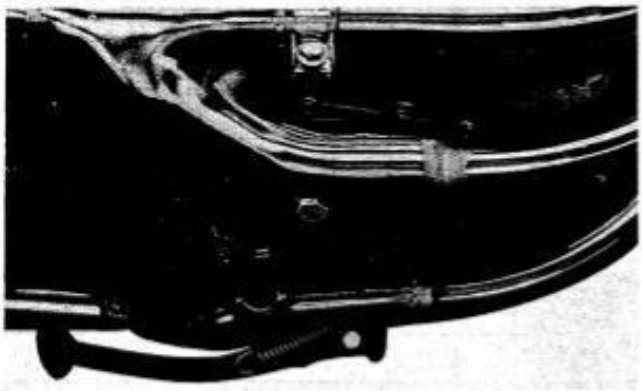

GS550T MODEL

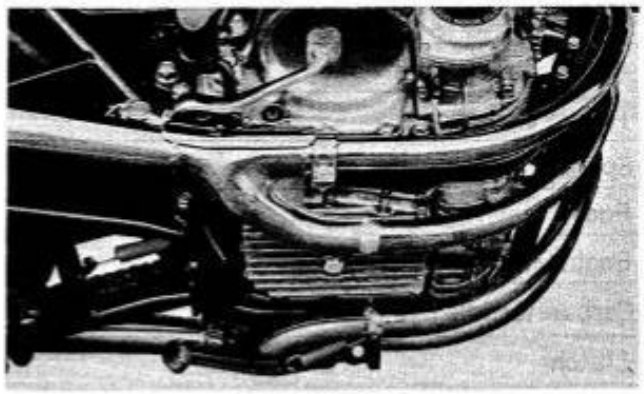

GS550N MODEL

FUEL SYSTEM

- The carburetor has been changed from MIKUNI VM22SS to MIKUNI BS32SS.

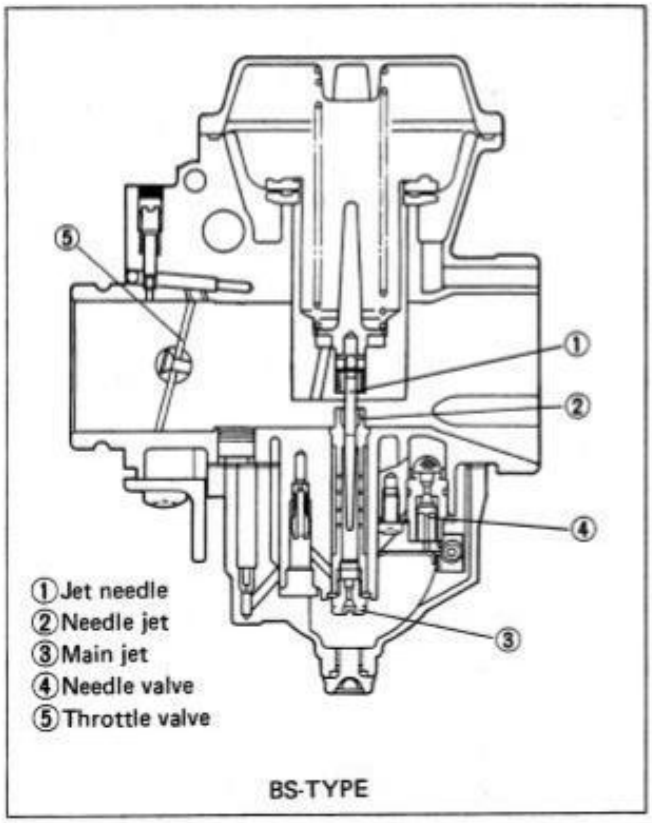

GS550T MODEL

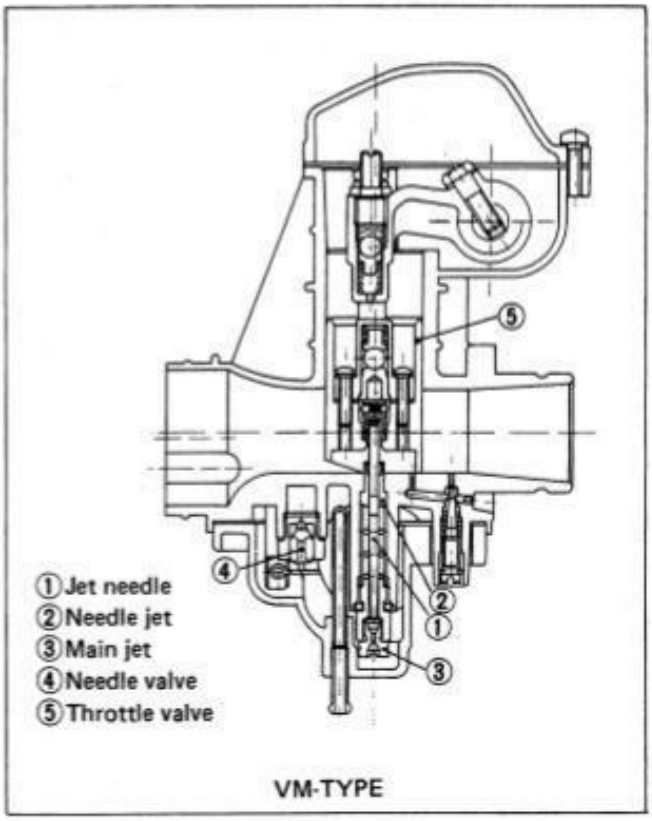

GS550N MODEL

- The carburetor choke system has been changed from lever to knob.

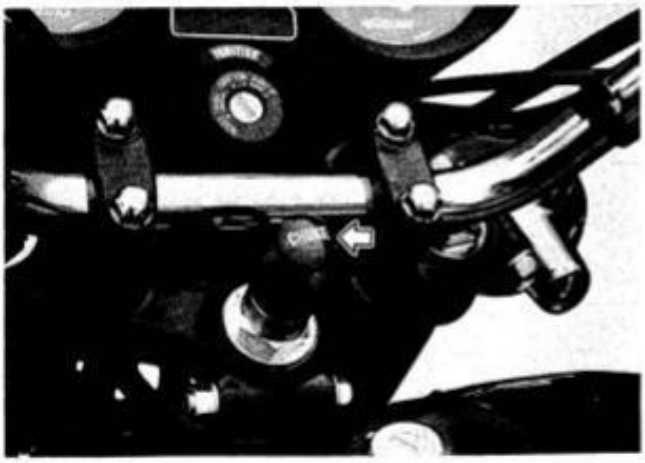

GS550T MODEL

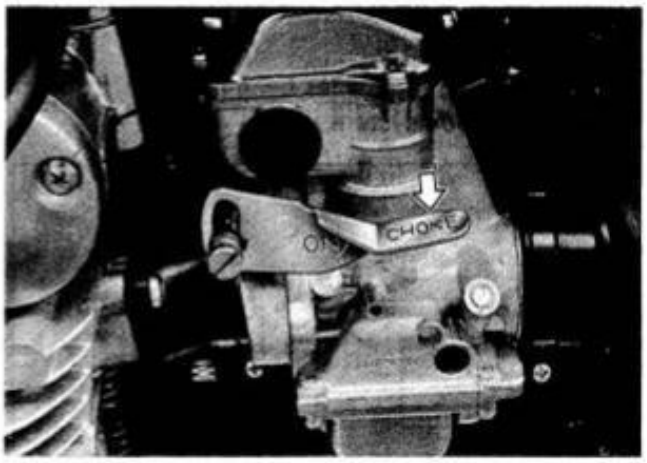

GS550N MODEL

- Fuel cock has been changed as shown below.

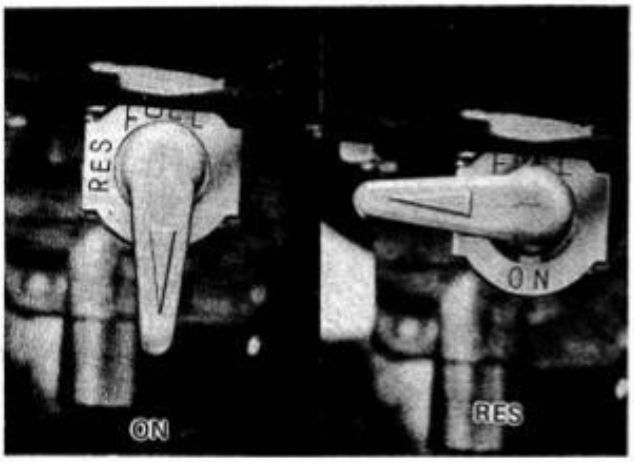

GS550T MODEL

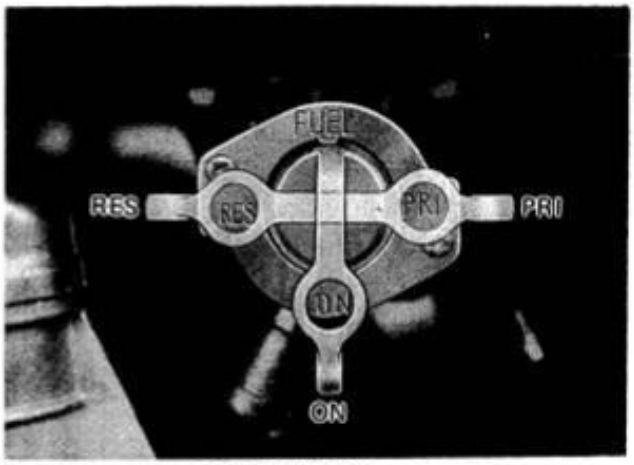

GS550N MODEL

ELECTRICAL

- Charging system has been changed as shown below.

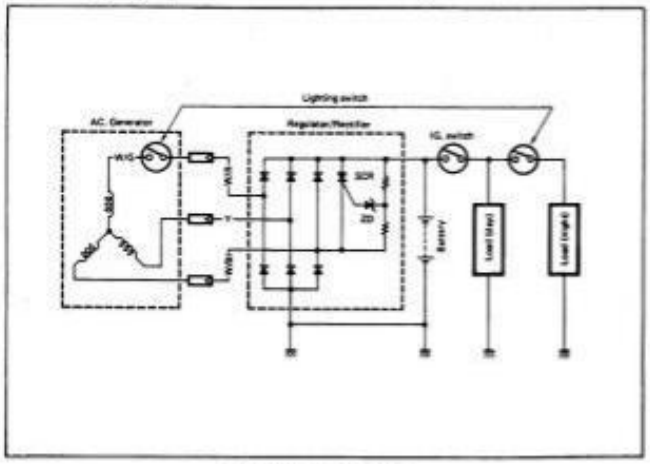

GS550T MODEL

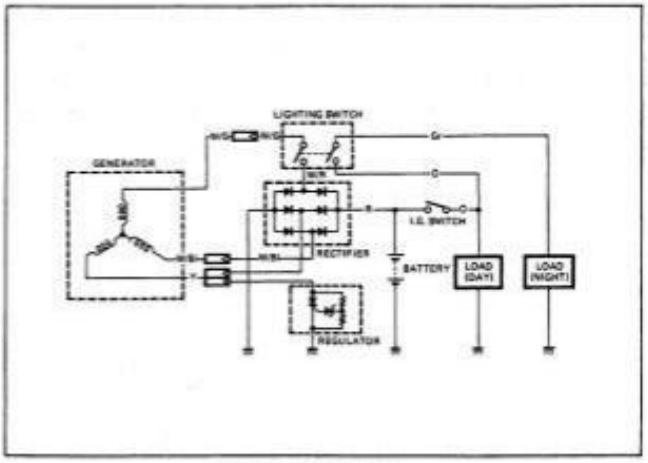

GS550N MODEL

- The ignition system has been changed from the battery ignition system to the maintenance-free transistorized ignition system.

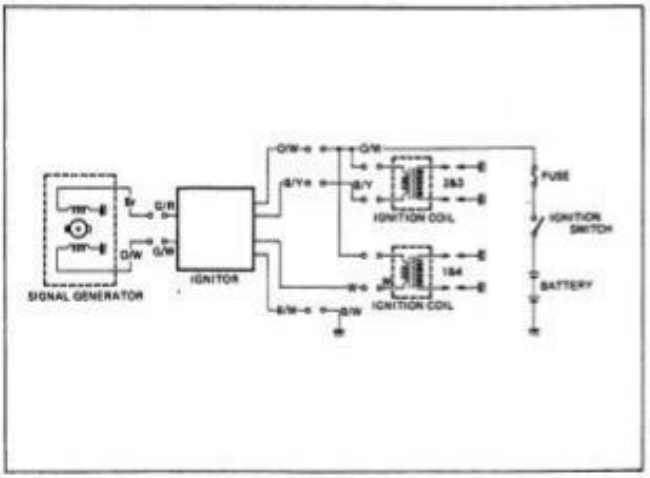

GS550T MODEL

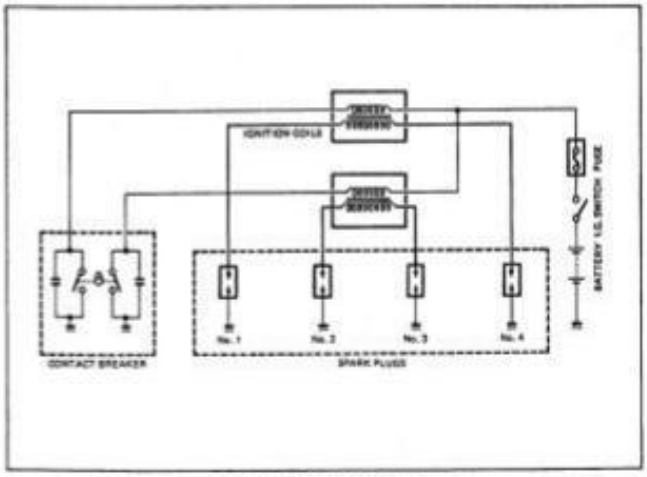

GS550N MODEL

CHASSIS

- Steering stem bearing has been changed from steel ball type to taper roller bearing type.

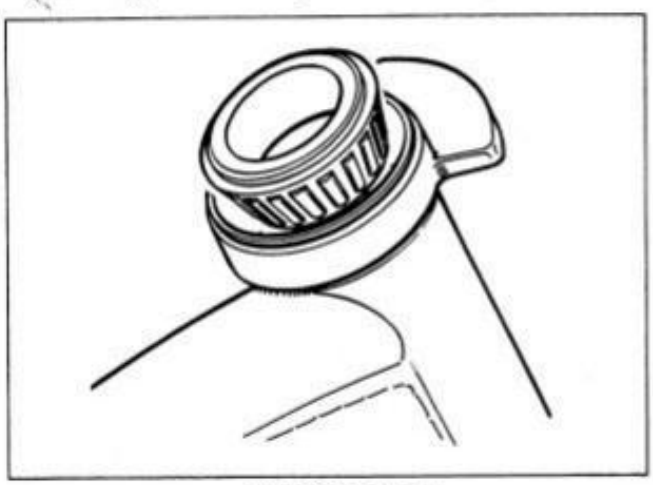

GS550T MODEL

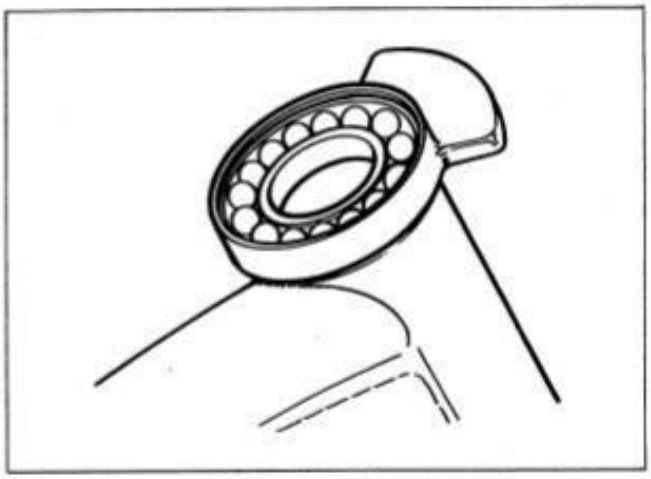

GS550N MODEL

- The front master cylinder cap has been changed from a screwing-in type to a 4-screw fastening type.

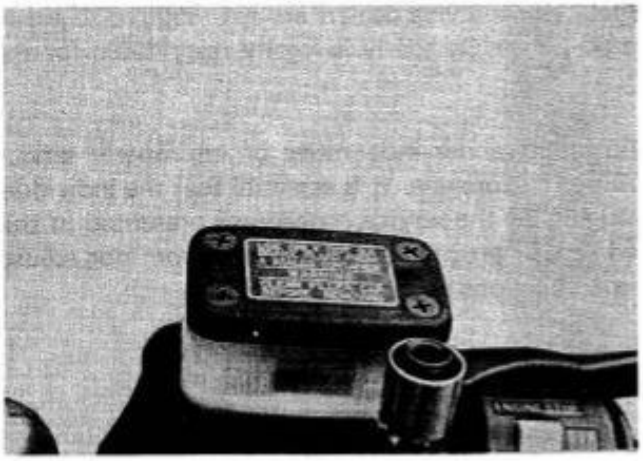

GS550T MODEL

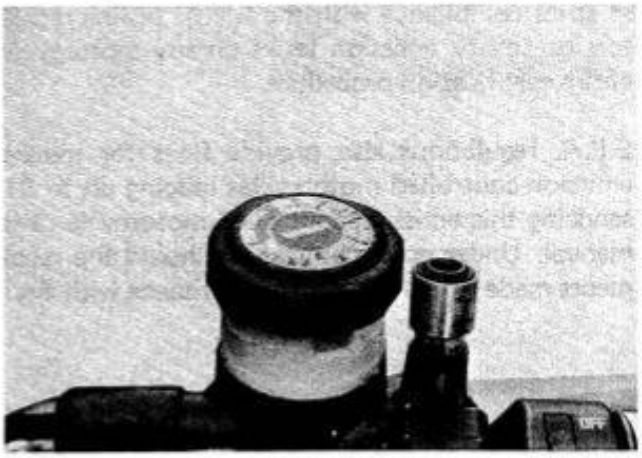

GS550N MODEL

- Front brake caliper has been changed as shown below.

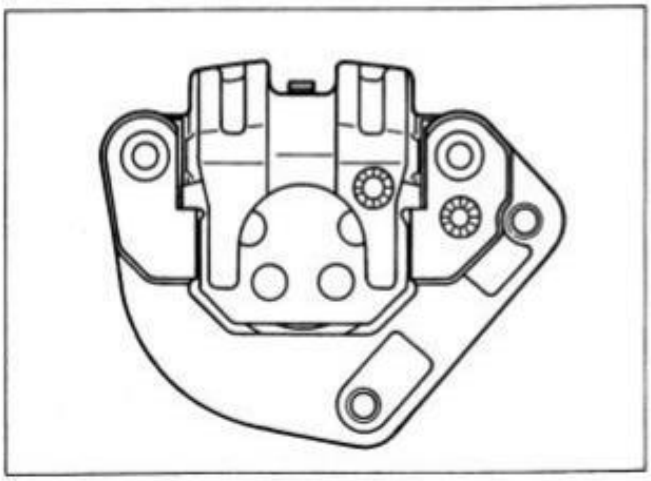

GS550T MODEL

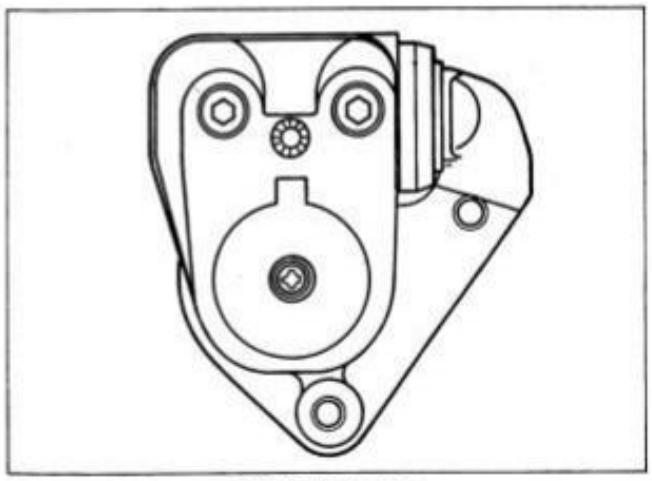

GS550N MODEL

EMISSION CONTROL & REGULATIONS

EMISSION REGULATIONS

On February 4, 1977, Federal Emission Regulations for motorcycles that may be licensable took effect. The regulations provided for a gradual, multi-step application of stricter emission limits beginning with all effected motorcycles manufactured after January 1, 1978, culminating with the present 1980 emission level restrictions. For the 1980 and succeeding years one set of emission limits is in effect. They are as follows:

1980 EMISSION LIMITS

CATEGORIES	HYDROCARBONS (HC)	CARBON MONOXIDE
All motorcycles 50 cc – Larger	5.0 Grams/Kilometer (8.0 Grams/Mile)	12 Grams/Kilometer (19.3 Grams/Mile)

Emission-controlled motorcycles which are subject to the emission regulations are those motorcycles which are equipped with a headlight, taillight, stop light and which have an engine displacement larger than 50 cc.

Suzuki Motor Company performed all the necessary testing and certification of emission-controlled models in strict compliance with the E.P.A. testing regulations. Suzuki motorcycle dealers are not required to either test or certify emission levels on any motorcycles as Suzuki Motor Company is legally responsible for the entire certification procedure.

E.P.A. regulations also provide fines for individuals who alter, render inoperative or improperly service emission-controlled motorcycles ranging up to $10,000.00 per motorcycle. It is essential that the individual servicing this emission-controlled motorcycle review thoroughly all the service procedures presented in this manual. Under no circumstances should the recommended service procedures be deviated from nor adjustments made which are not in accordance with the factory specifications or service procedures.

EMISSION CONTROL CARBURETOR COMPONENTS

GS550 motorcycles are equipped with precision, manufactured carburetors for emission level control. These carburetors require special mixture control components and other precision adjustments to function properly.

There are several carburetor mixture control components in each carburetor assembly. Three (3) of these components are machined to much closer tolerances than standard machined carburetor jets. These three (3) particular jets – MAIN JET, NEEDLE JET, PILOT JET – must not be replaced by standard jets. To aid in identifying these three (3) jets a different design of letter and number are used. If replacement of these close tolerance jets becomes necessary, be sure to replace them with the same type close tolerance jets marked as in the examples shown below.

The jet needle is also of special manufacture. Only one clip position is provided on the jet needle. If replacement becomes necessary the jet needle may only be replaced with an equivalent performing replacement component. Suzuki recommends that Genuine Suzuki Parts be utilized whenever possible for the best possible performance and durability.

Conventional figures Used On Standard Tolerance Jet Components	1 2 3 4 5 6 7 8 9 0
Emission Type Figures Used On Close Tolerance Jet Components	1 2 3 4 5 6 7 8 9 0

The carburetor specification for the emission-controlled GS550 are as follows.

Carburetor I.D. No.	Main Jet	Needle Jet	Jet Needle	Pilot Jet	Pilot Screw
47070	#92.5	X-6	4BEL2	#40	PRE-SET DO NOT ADJUST

The pilot screw is pre-set by the factory utilizing specialized testing and adjusting procedures. The pilot screw is not adjustable as the idle circuit is "sealed" after factory adjustment. Adjusting, interferring with, improper replacement, or resetting of any of the carburetor components may adversely affect carburetor performance and cause the motorcycle to exceed the exhaust emission level limits. If persons, who are unaware of these special carburetor servicing requirements tamper with the carburetors the Suzuki dealer should restore the carburetors to their original condition or if unable to effect repairs, contact the distributors representative for further technical information and assistance.

GENERAL EMISSION INFORMATION

There are three different types of regulated exhaust emissions. They are:

Hydrocarbons (HC)
Carbon Monoxide (CO)
Oxides of Nitrogen (NOx)

Automobiles must meet specific emission standards for all three of these pollutants. Motorcycles must only meet the requirements for the following:

Hydrocarbons (HC)
Carbon Monoxide (CO)

HC exhaust emissions are basically unburned fuel vapors which have passed through the engine and escaped the combustion process.

CO exhaust emissions are formed during an incomplete combustion cycle as a result of a rich air/fuel mixture. The only way that CO can be produced is by the combustion cycle.

Total NOx emissions from all motorcycles is considered negligible. The EPA states that total NOx emission from motorcycles by 1990 will only amount to approximately 0.5%. NOx is formed during the combustion process at high combustion chamber temperatures.

CARBON MONOXIDE

Carbon monoxide is a product of an incomplete combustion cycle. CO is measured in grams per mile or kilometer and also in percentage (%).

The most common cause of CO is rich carburetion. As the mixture is richened excessively, the CO amount increases proportionately. Engine oil is also a hydrocarbon, so engine problems which lead to oil burning increase carbon monoxide.

CARBURETION MALFUNCTION

1. Air Cleaner – Dirty or over oiled.
2. Idle Mixture – Adjusted incorrectly.
3. Idle Speed – Too high or low.
4. Fuel Level – Sticking float, leaking needle, incorrect setting.
5. Choke – Leaking or linkage sticking.
6. Synchronization – Improper balance on multi cylinders.

ENGINE MALFUNCTIONS

1. Valve Seals – Leaking or torn.
2. Valve Guide – Worn and leaking excess oil.
3. Gaskets – Leaking oil into combustion chamber.

HYDROCARBONS

Hydrocarbons are unburnt gasoline vapors and can be measured in two different ways. The first is to measure the weight of the pollutants over a specific distance such as grams per mile or grams per kilometer. The second method is to measure the concentration of HC in the exhaust gas in parts per million (PPM).

The most common cause of high HC emissions are ignition system problems. If the ignition system fails to ignite the fuel mixture properly, then raw gasoline vapors will pass through the engine into the exhaust system. Listed are the most common ignition problems which occur and which can affect HC emission output.

IGNITION SYSTEM MALFUNCTIONS

1. Spark Plugs – Fouled, dirty, improper type or improperly gapped.
2. Ignition timing – Advanced or Retarded.
3. Timing Advance – Too fast or too slow an advance rate.
4. Battery – Low charge or faulty.

Carburetion can also lead to high HC emissions if the mixture is either excessively rich or excessively lean.

MIXTURE-RELATED MALFUNCTIONS

1. Air Cleaner – Dirty, over oiled or torn.
2. Jets – Clogged, restricted or incorrect size.
3. Float Level – Level too low (lean) or too high (rich).
4. Choke – Leaking choke plunger or sticking linkage.
5. Air Leaks – Intake manifolds, engine gaskets and other sealing surfaces.
6. Synchronization – Unbalanced on multi-cylinder machines.
7. Exhaust System – Restricted flow or improper exhaust system.

Engine wear or damage can also cause high HC emissions.

1. Rings – Low compression, leakage into crankcase.
2. Valves – Improper adjustment, bent stem or burnt.
3. Gaskets – Leaking, loss of compression.
4. Crank Seals – Leaking.
5. Oil Consumption – Worn valve guides, worn rings, clogged crankcase breather.
6. Oil – Improper engine oil.

FUEL SYSTEM

When turning starter motor, negative pressure is generated in the combustion chamber. This negative pressure works on the diaphragm of fuel cock through passageway provided in the carburetor main bore and vacuum pipe, and diaphragm builds up a negative pressure which is higher than the spring pressure. Fuel valve is forced to open due to diaphragm operation, and thus allow fuel to flow into carburetor float chamber.

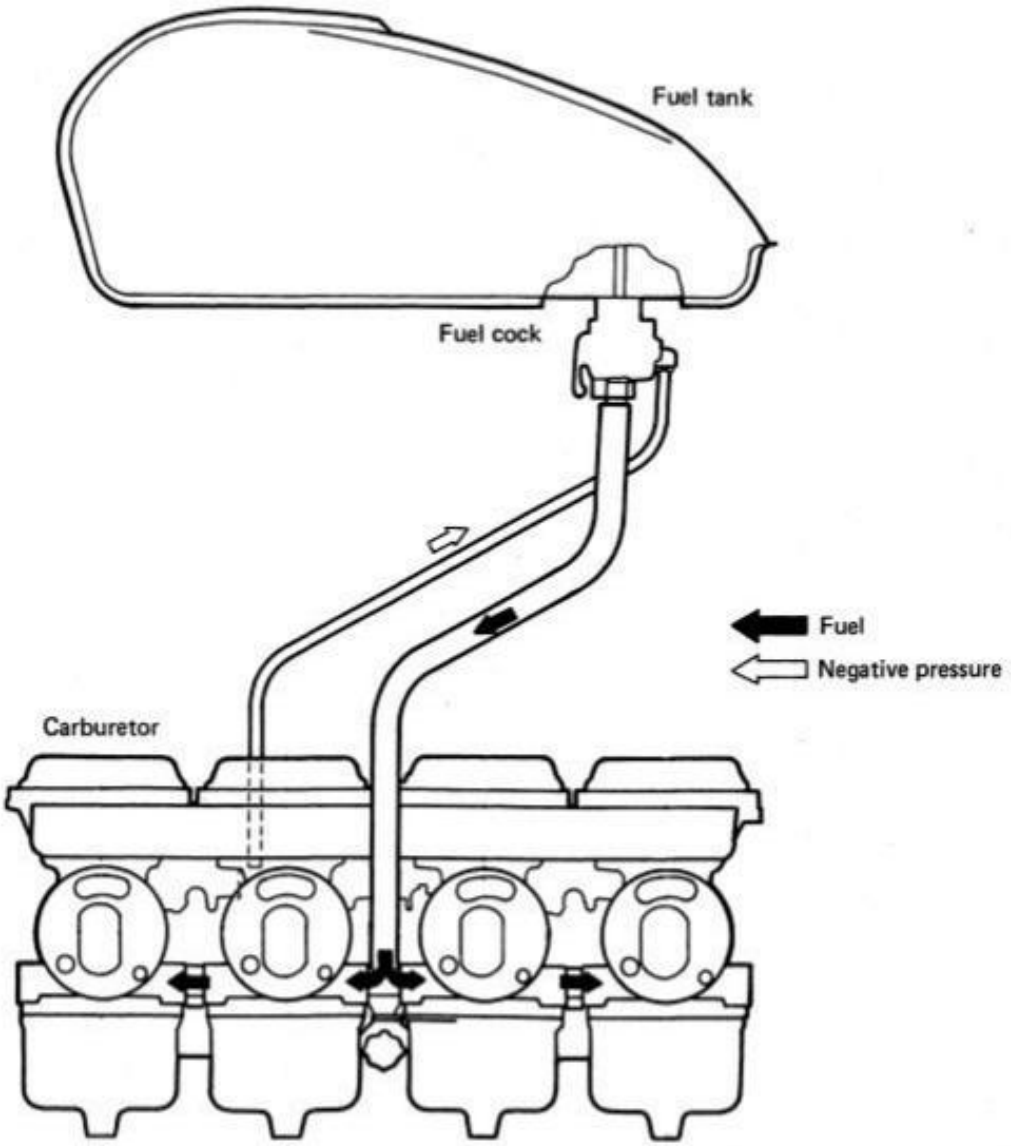

FUEL COCK

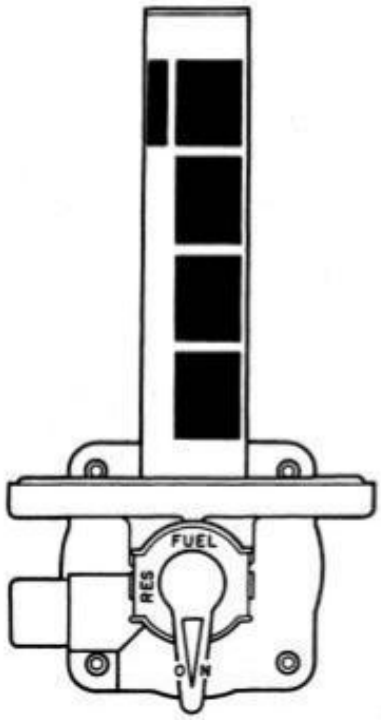

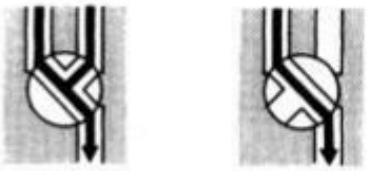

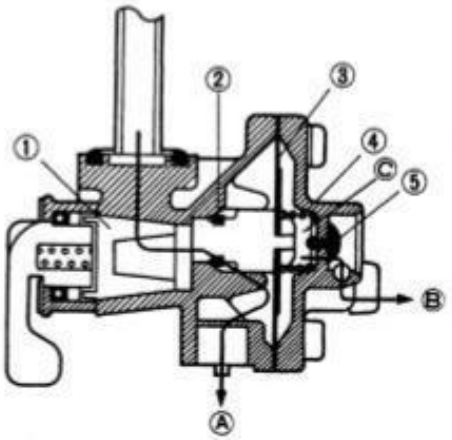

① Fuel valve ② O-ring ③ Diaphragm
④ Spring ⑤ One way valve
Ⓐ Fuel flow Ⓑ Vacuum Ⓒ Chamber

When the engine is not running with the lever in the ON or RES position, the valve is kept in the closed position by applying pressure utilizing a spring so that no fuel will flow to the carburetors. When the engine is engaged, a negative pressure is generated in the diaphragm chamber "C" through the vacuum (negative pressure) pipe which is connected to the carburetor, and builds up a negative pressure which is higher than the spring pressure so that the diaphragm is forced to open the valve and thus allows the fuel to flow to the carburetors.

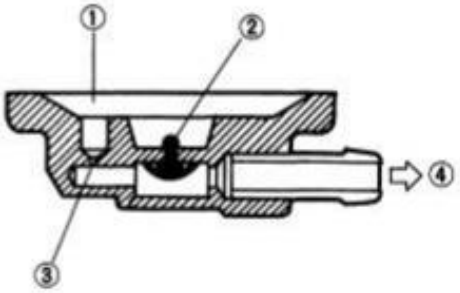

① Diaphragm ② One way valve
③ Air return orifice ④ Vacuum

CARBURETOR

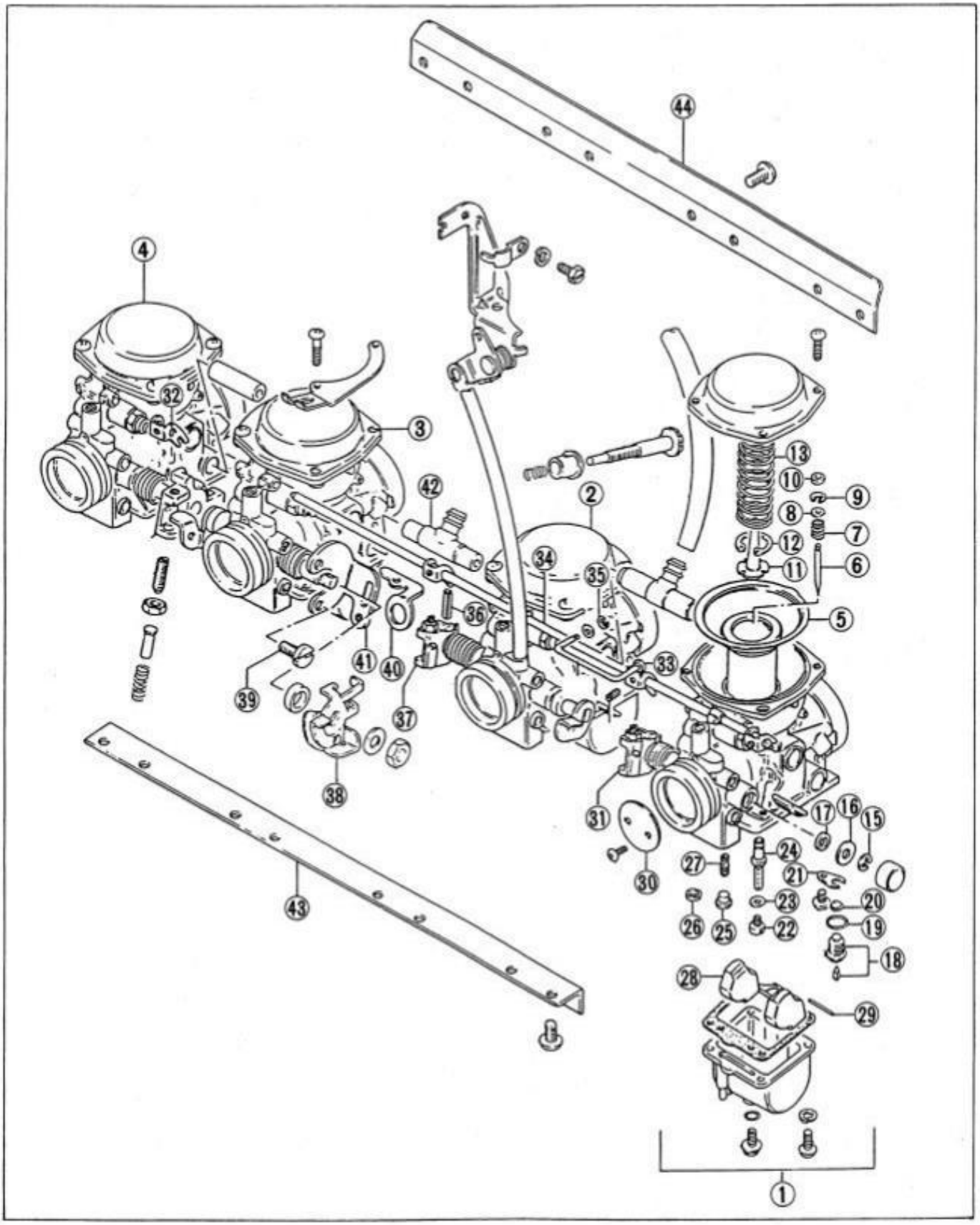
44
4
32
3
42
2
13
10
9
8
7
12
11
6
34
35
5
36
41
40
33
39
37
38
31
17
16
15
30
27
24
21
23
20
26
25
22
19
18
28
29
43
1

① Carburetor, No. 1
② Carburetor, No. 2
③ Carburetor, No. 3
④ Carburetor, No. 4
⑤ Diaphragm
⑥ Jet Needle
⑦ Spring
⑧ Washer
⑨ E ring
⑩ Ring
⑪ Guide holder
⑫ Clip
⑬ Spring
⑮ E ring
⑯ Gasket
⑰ Seal
⑱ Needle valve
⑲ O ring
⑳ Filter
㉑ Plate
㉒ Main jet
㉓ Washer
㉔ Needle jet
㉕ Plug
㉖ Gasket
㉗ Pilot jet
㉘ Float
㉙ Pin
㉚ Throttle valve
㉛ Shaft
㉜ Lever
㉝ Lever
㉞ Starter shaft
㉟ E ring
㊱ Pin
㊲ Lever
㊳ Lever
㊴ Screw
㊵ Bracket
㊶ Bracket
㊷ Nipple
㊸ Plate
㊹ Plate

SPECIFICATIONS

Item	Specification	Item	Specification
Type	MIKUNI BS32SS	Needle jet (N.J.)	X-6
Bore size	32 mm (1.26 in)	Pilot jet (P.J.)	#40
I.D. No.	47070	By pass (B.P.)	0.9, 0.7, 0.7
Idle r/min	1 100 ± 100 r/min	Pilot outlet (P.O.)	0.7
Fuel level	5.0 ± 0.5 mm (0.20 ± 0.02 in)	Valve seat (V.S.)	2.0
Float height	22.4 ± 1.0 mm (0.88 ± 0.04 in)	Starter jet (G.S.)	35
Main jet (M.J.)	#92.5	Pilot screw (P.S.)	PRE-SET
Main air jet (M.A.J.)	1.6		
Jet needle (J.N.)	4BEL2		

DIAPHRAGM AND PISTON OPERATION

The carburetor is of a variable-venturi type, whose venturi cross section area is increased or decreased automatically by the piston according to the vacuum present on the downstream side of the venturi. Vacuum is admitted into the diaphragm chamber through an orifice provided in the piston.

Rising vacuum overcomes the spring force, causing the piston to rise to increase the said area and thus prevent the air velocity from increasing. Thus, air velocity in the venturi passage is kept relatively constant for improved fuel atomization and for securing an optimum ratio of fuel to air in the mixture.

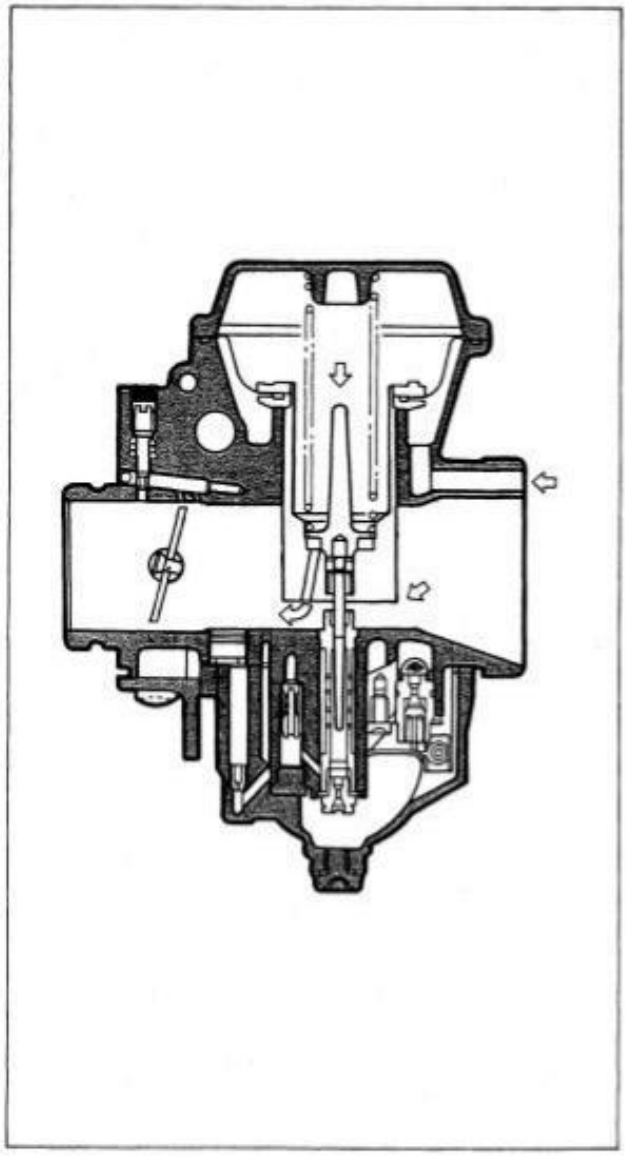

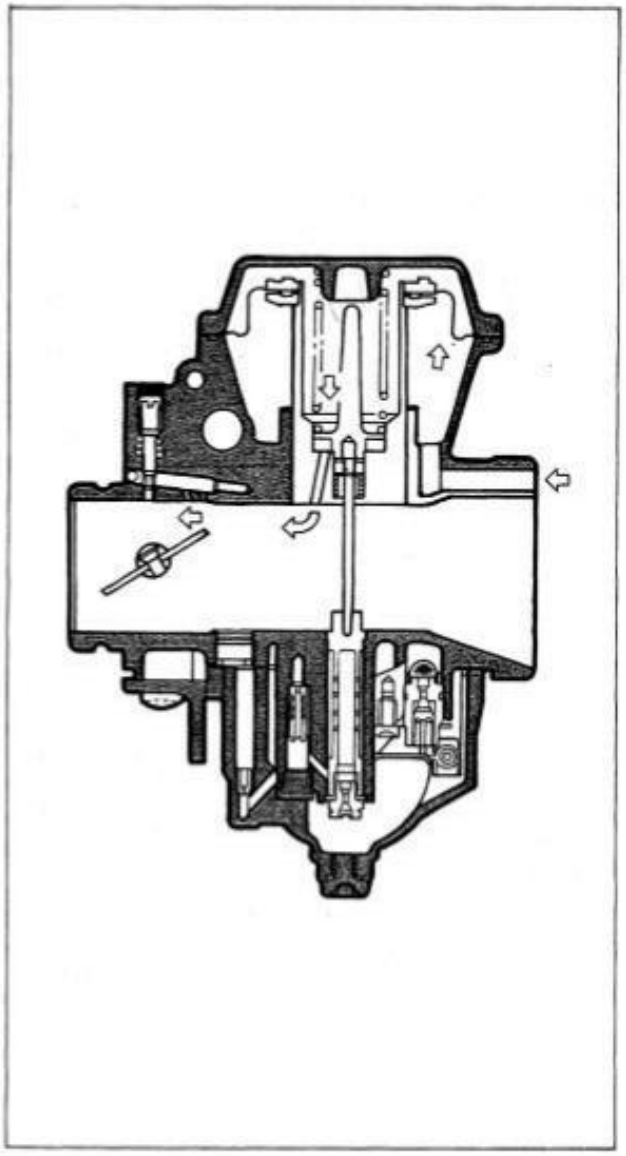

SLOW SYSTEM

This system supplies fuel during engine operation with throttle valve closed or slight opened.
The fuel from float chamber is first passed through main jet and metered by pilot jet where it mixes with air coming in through pilot air jet.
This mixture, rich with fuel, then goes up through pilot pipe to pilot screw. A part of the mixture is discharged into the main bore out of bypass ports. The remainder is then metered by pilot screw and sprayed out into the main bore through pilot outlet.

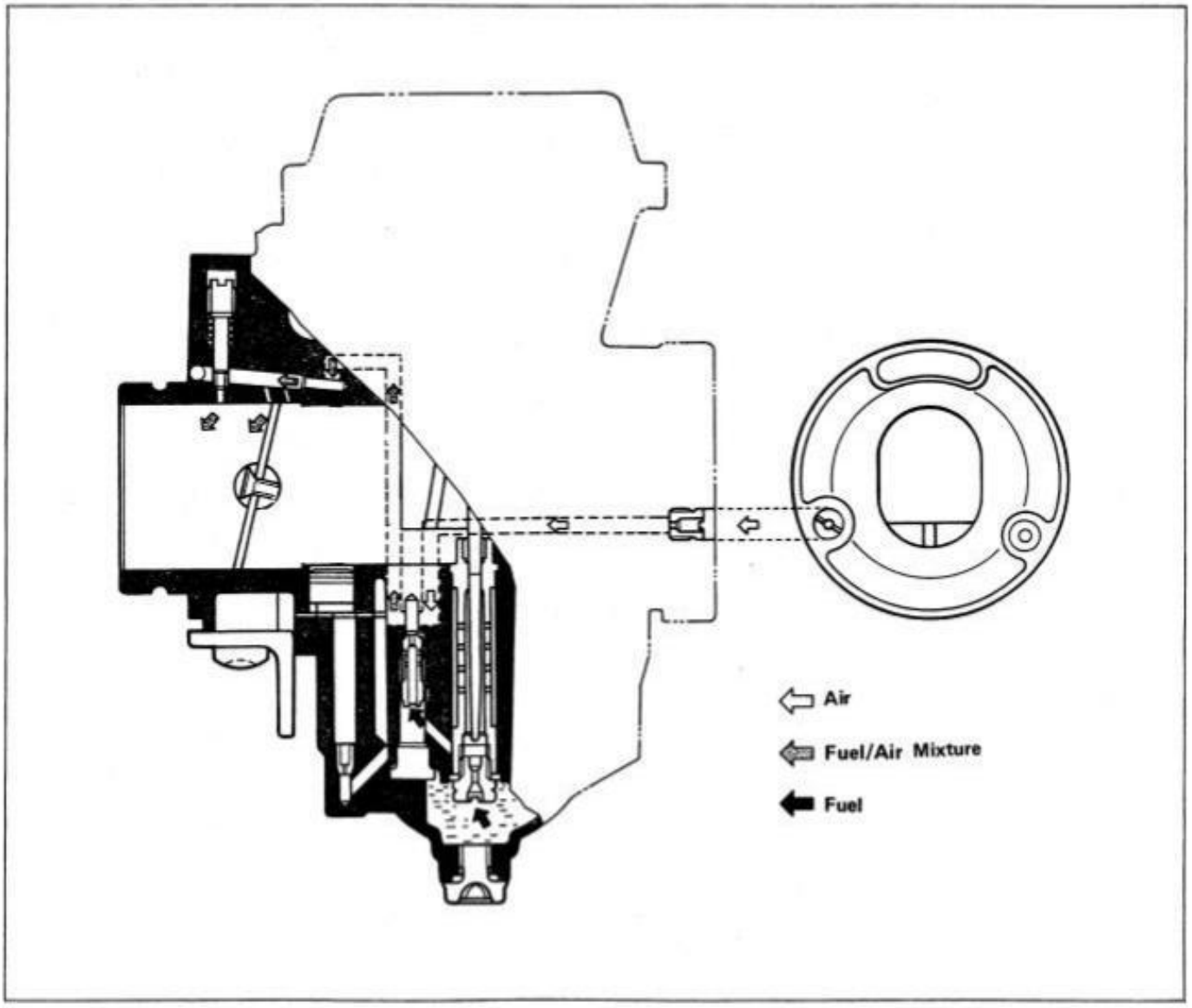

MAIN SYSTEM

As throttle valve is opened, engine speed rises, and this increases vacuum in the venturi. Consequently the piston valve moves upward.

Meanwhile, the fuel in float chamber is metered by main jet, and the metered fuel enters needle jet, in which it mixes with the air admitted through main air jet to form an emulsion.

The emulsified fuel then passes through the clearance between needle jet and jet needle, and is discharged into the venturi, in which it meets main air stream being drawn by the engine.

Mixture proportioning is accomplished in needle jet; the clearance through which the emulsified fuel must flow is large or small, depending ultimately on throttle position.

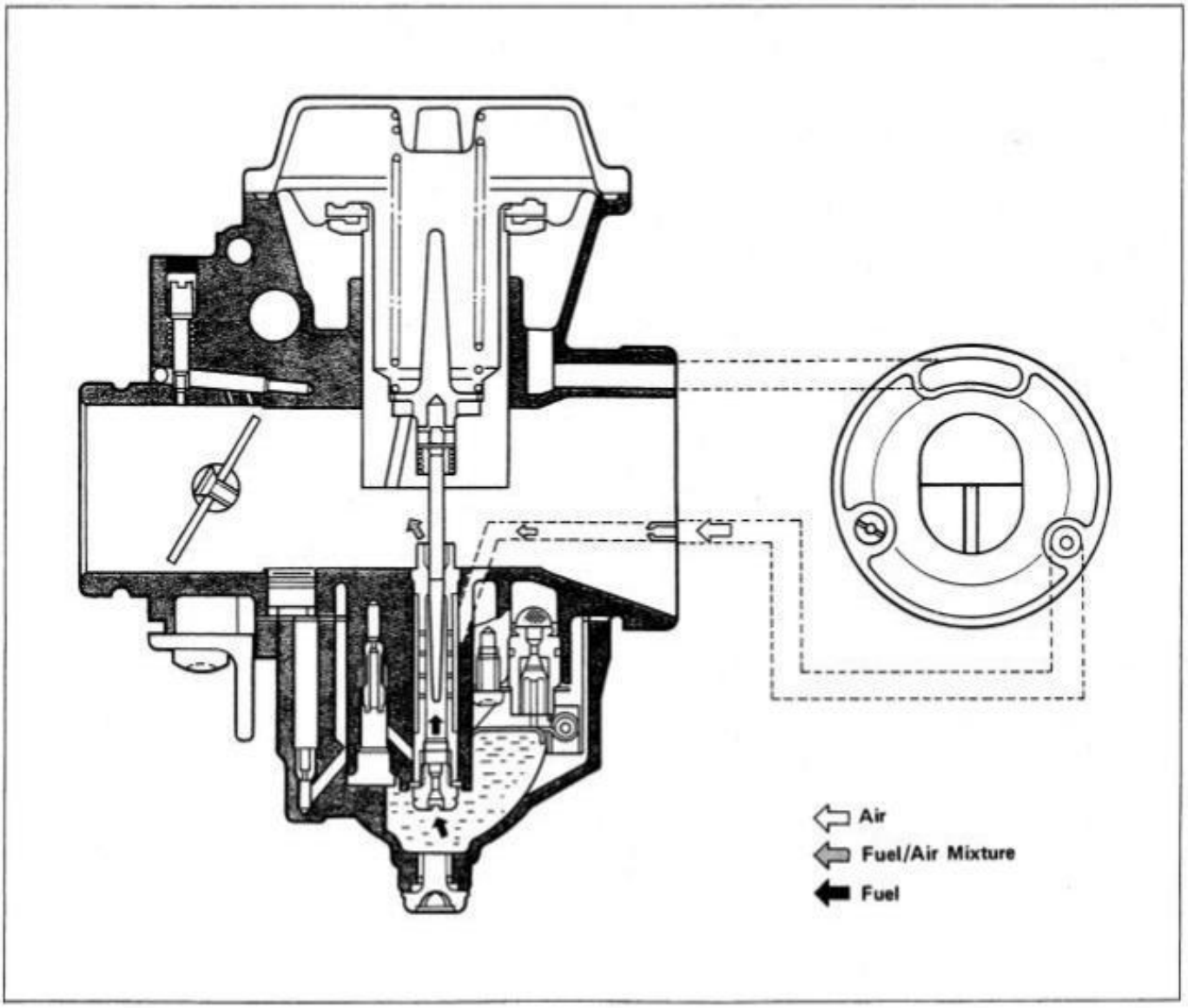

STARTER SYSTEM

Pulling up the choke knob slides starting plunger to draw fuel into the starter circuit from the float chamber through starter jet.

Starter jet meters this fuel, which then flows into starter pipe and mixes with the air coming from the float chamber. The mixture, rich in fuel content, reaches starting plunger and mixes again with the air coming through a passage extending from behind the diaphragm.

The two successive mixings of fuel with air are such that a proper air/fuel mixture for starting is produced when the mixture is sprayed out through starter outlet into the main bore.

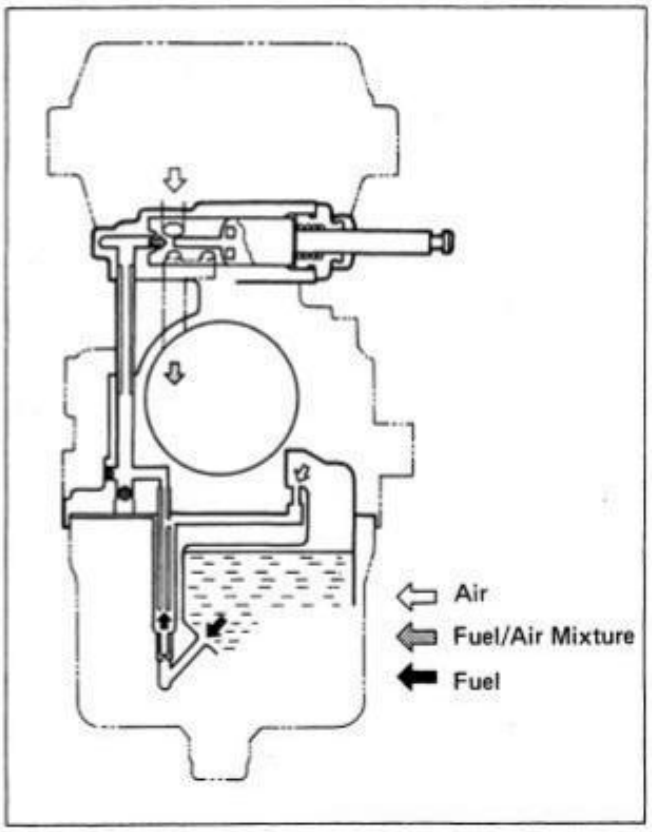

FLOAT SYSTEM

Floats and needle valve are associated with the same mechanism, so that, as the floats move up and down, the needle valve too moves likewise. When fuel level is up in float chamber, floats are up and needle valve remains pushed up against valve seat. Under this condition, no fuel enters the float chamber.

As the fuel level falls, floats go down and needle valve unseats itself to admit fuel into the chamber. In this manner, needle valve admits and shuts off fuel alternately to maintain a practically constant fuel level inside the float chamber.

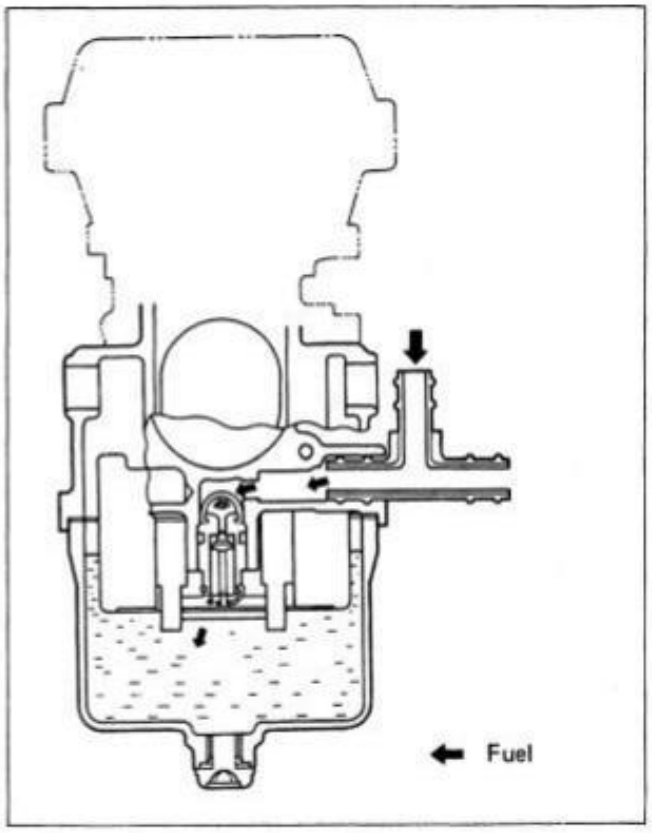

DISASSEMBLY

- Remove two throttle bracket screws ① and starter bracket screw ②, and remove brackets.

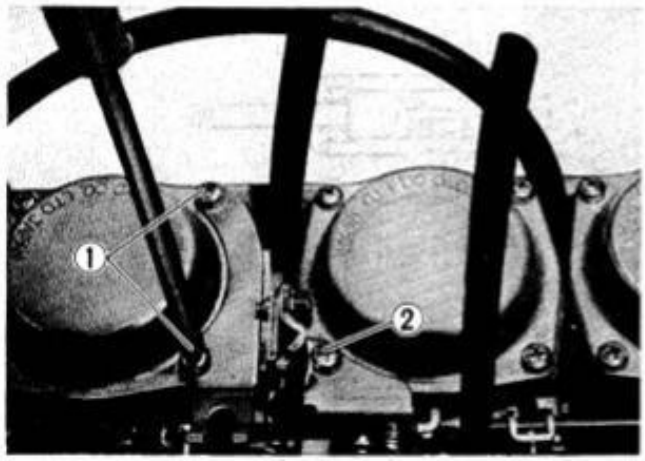

- Loosen four screws, and remove starter shaft ③, three levers ④ and starter bracket and lever ⑤.

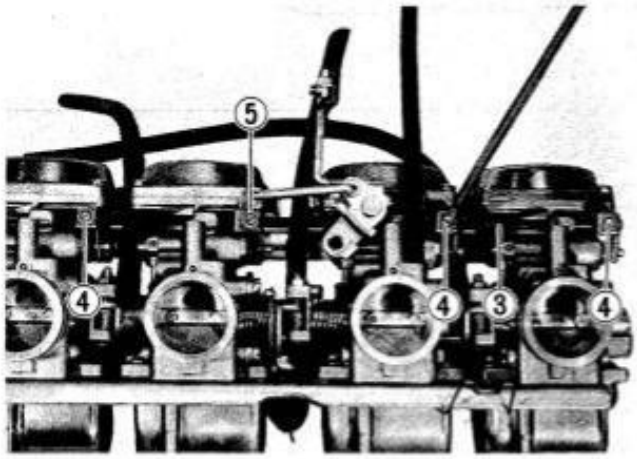

- Remove eight screws and remove the plate.

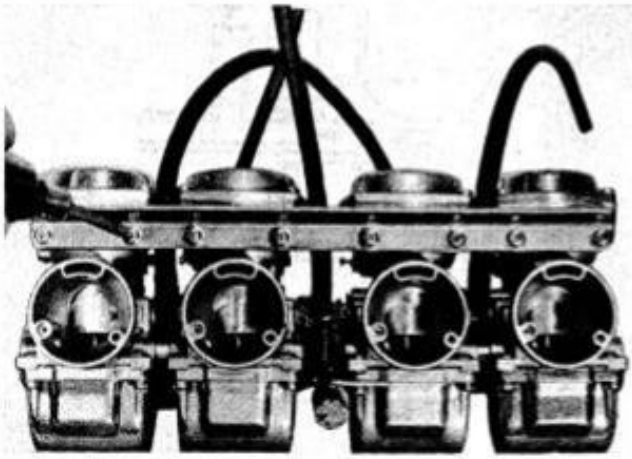

- Remove eight screws and remove the plate.

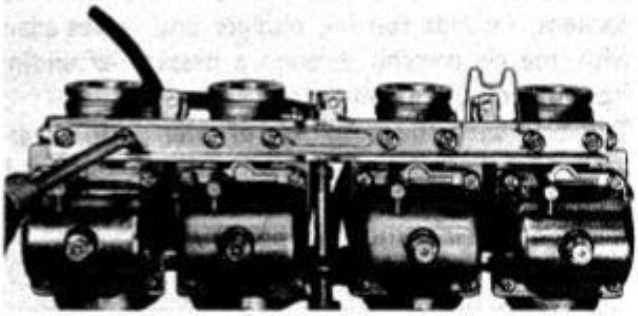

- Separate four carburetors, remove nut ⑥ and remove adjuster lever.

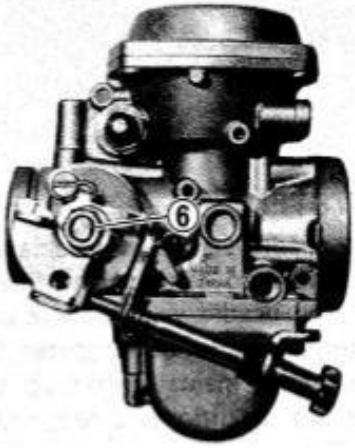

- Remove three screws, and remove adjuster bracket.

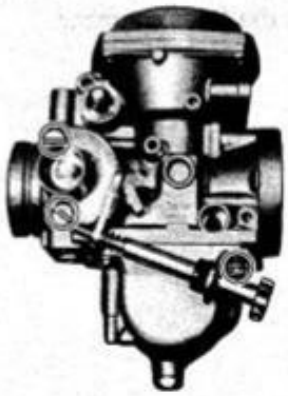

- Remove two throttle valve screws ① and pull out the throttle valve by turning throttle valve shaft.

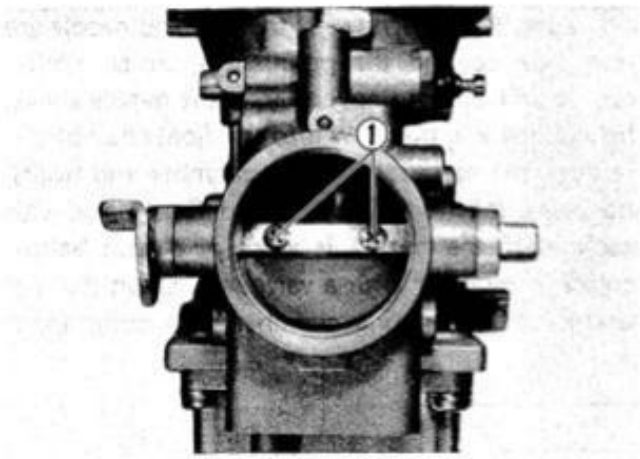

- Remove four screws and remove float chamber.

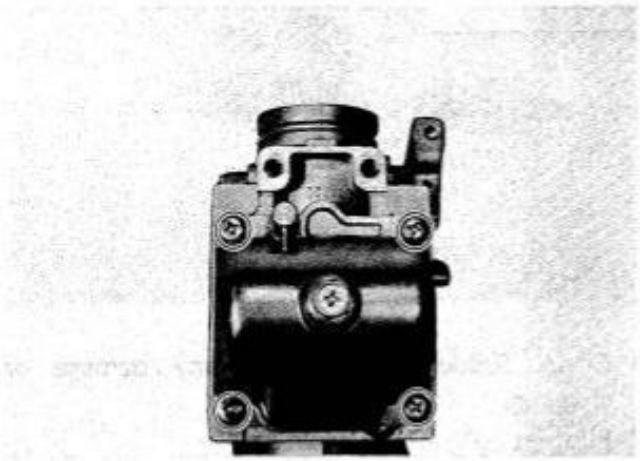

- Remove float ②, pilot jet ③ and main jet ④.

NOTE: Do not fall dawn the O-ring ⑤.

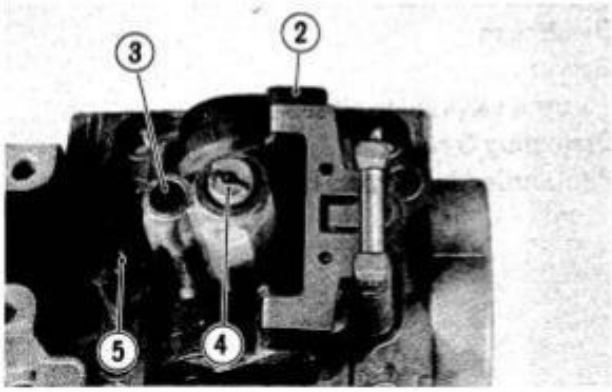

- Remove four screws and remove carburetor cap.

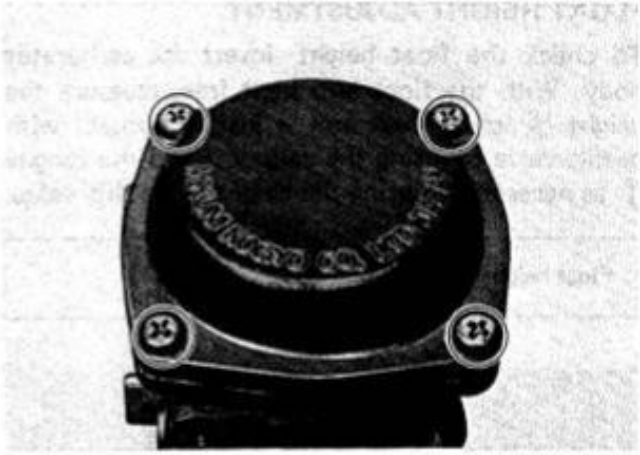

- Remove circlip ⑥ from piston.

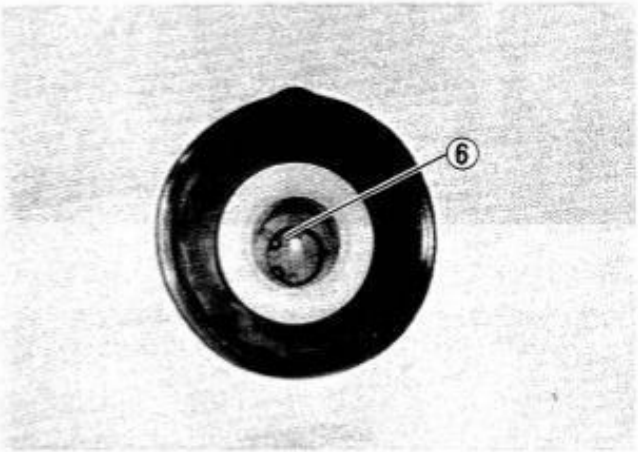

- Remove needle jet ⑦ from the top side.
- Remove starter valve housing.

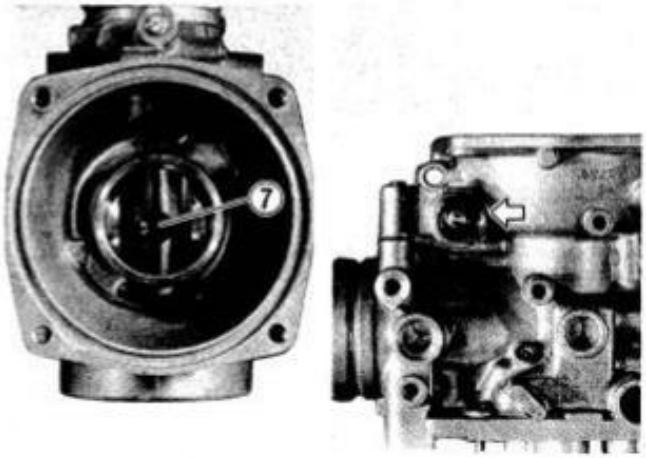

INSPECTION

FLOAT HEIGHT ADJUSTMENT

To check the float height, invert the carburetor body. With the float arm kept free, measure the height Ⓐ while float arm is just in contact with needle valve by using the caliper. Bend the tongue ① as necessary to bring the height Ⓐ to this value.

Float height Ⓐ	22.4 ± 1.0 mm (0.88 ± 0.04 in)

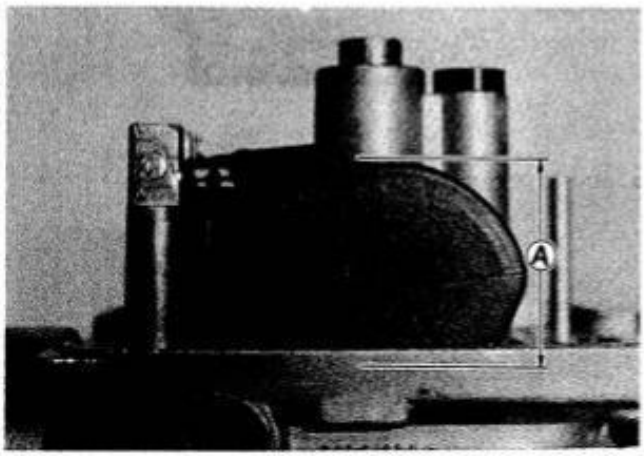

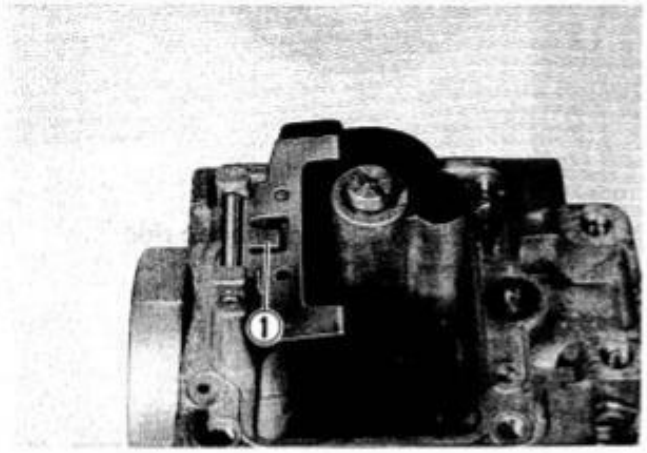

NOTE: Be sure to remove the gasket before measuring the height.

NEEDLE VALVE

If foreign matter is caught between the valve seat and the needle, the gasoline will continue flowing and cause it to overflow. If the seat and needle are worn out beyond the permissible limits, similar trouble will occur. Conversely, if the needle sticks, the gasoline will not flow into the float chamber.

Remove the carburetor, float chamber and floats, and clean the float chamber and float parts with gasoline. If the needle is worn as shown below, replace it together with a valve seat. Clean the fuel passage of the mixing chamber with compressed air.

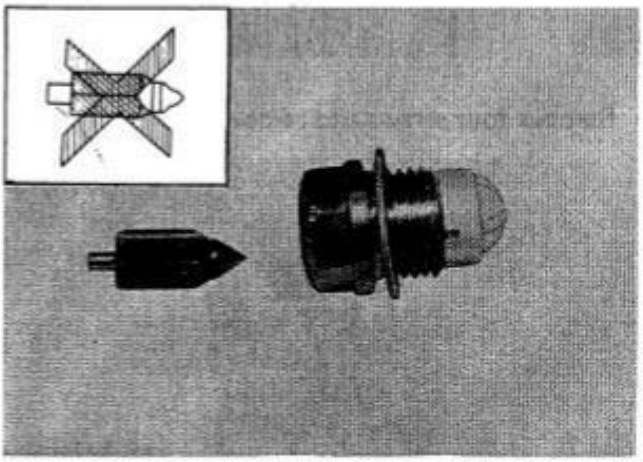

- Check following items for any damage or clogging.
  - Pilot jet
  - Main jet
  - Main air jet
  - Pilot air jet
  - Needle jet air bleeding hole and O-ring
  - Float
  - Needle valve mesh
  - Diaphragm
  - Gasket
  - Throttle valve shaft oil seals
  - Drain plug O-ring
  - Pilot outlet and bypass holes

REASSEMBLY

- Align the groove ① of the needle jet with the pin ② and replace it.

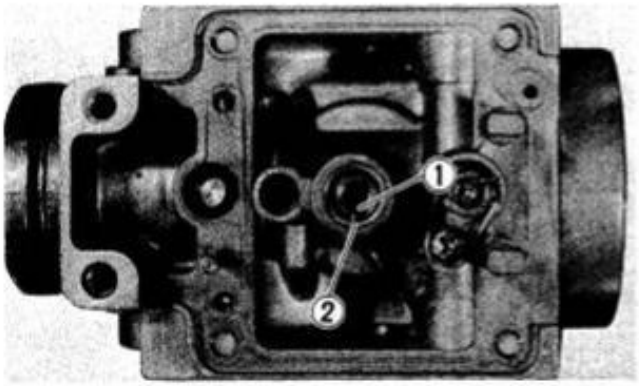

- Place tongue ③ of diaphragm to carburetor body properly.

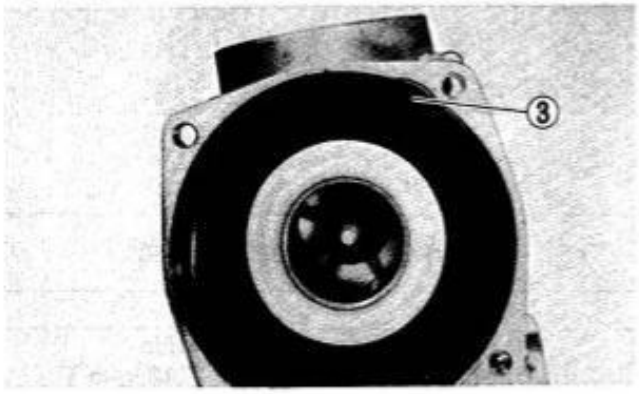

- Secure carburetor cap and float chamber with screws.

Tightening torque	2.5 - 4.5 N·m [0.25 - 0.45 kg-m 1.8 - 3.0 lb-ft]

- When fitting throttle valve shaft oil seals, groove should be faced outside.

- Secure adjuster bracket to No. 3 carburetor with two screws.
  Before tightening the screws, coat them with THREAD LOCK CEMENT.

Thread lock cement	99000-32040

Tightening torque	2.5 - 4.5 N·m [0.25 - 0.45 kg-m 1.8 - 3.0 lb-ft]

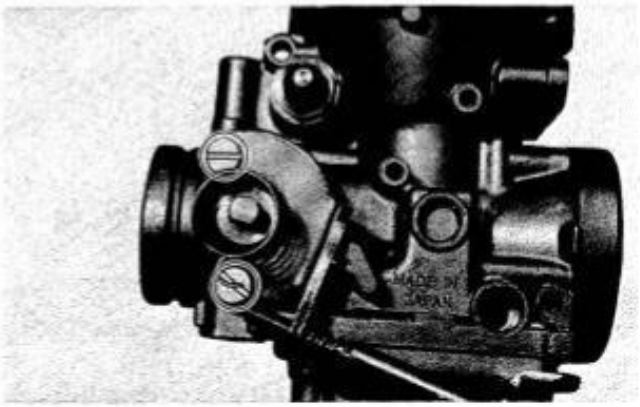

- Secure adjuster lever with nut.

- Connect the carburetors correctly, and secure top of each carburetor to the plate with screws.

Tightening torque	2.5 - 4.5 N·m [0.25 - 0.45 kg-m 1.8 - 3.0 lb-ft]

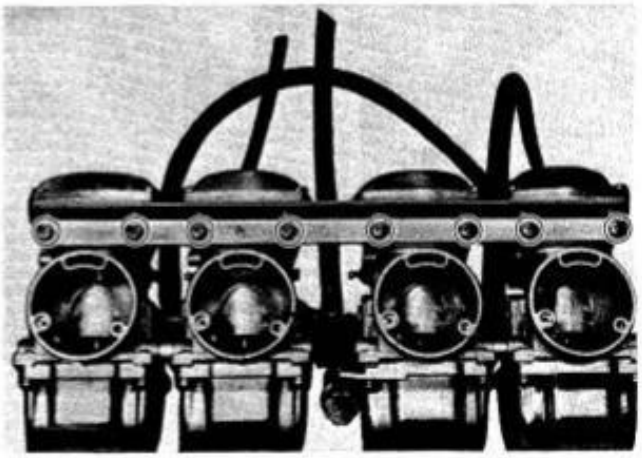

- Secure bottom of each carburetors to the plate with screws. Before tightening the screws, coat it with THREAD LOCK CEMENT.

Thread lock cement	99000-32040

Tightening torque	4.0 - 6.0 N·m [0.4 - 0.6 kg-m 3.0 - 4.5 lb-ft]

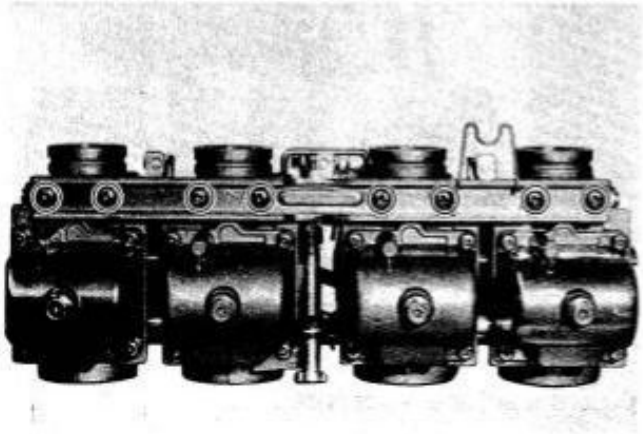

CAUTION: Make sure that the each throttle shaft lever is installed as shown in photo.

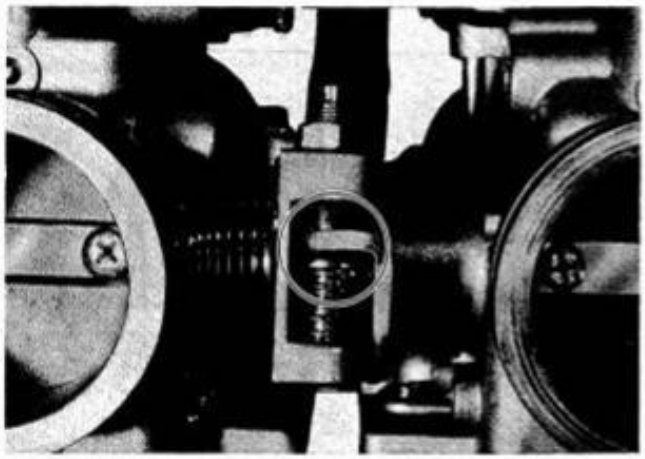

- Pass starter shaft through carburetors and starter levers, and secure starter lever with screws. Before tightening the screws, coat it with THREAD LOCK CEMENT.

CAUTION: Align the end of screw with recess in starter shaft.

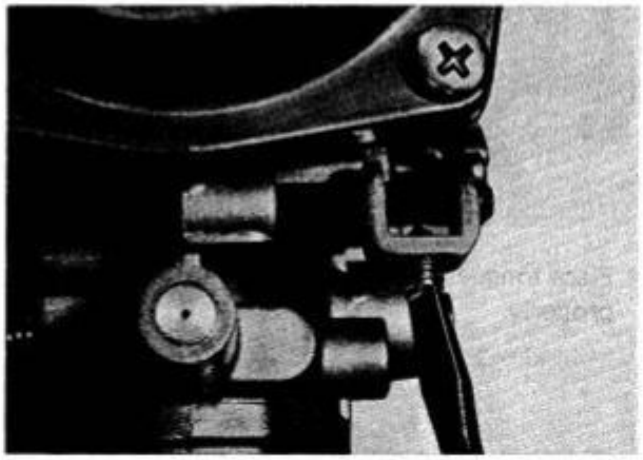

Thread lock cement	99000-32040

Tightening torque	0.6 - 1.0 N·m [0.06 - 0.10 kg-m 0.4 - 0.7 lb-ft]

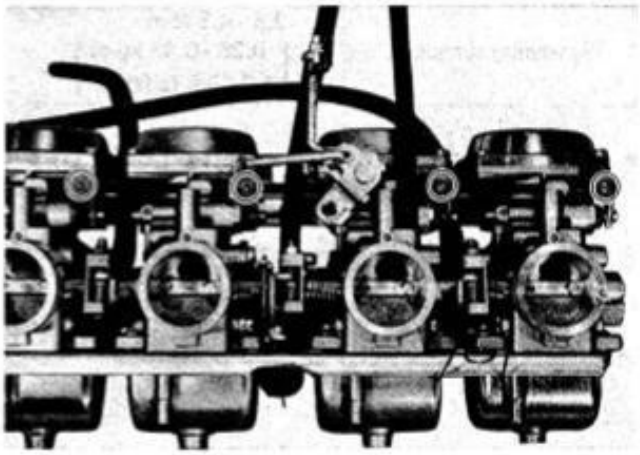

- Secure throttle bracket to No. 3 carburetor, and secure starter bracket to No. 2 carburetor cap, using screws.

Tightening torque	2.5 - 4.5 N·m [0.25 - 0.45 kg-m / 1.8 - 3.0 lb-ft]

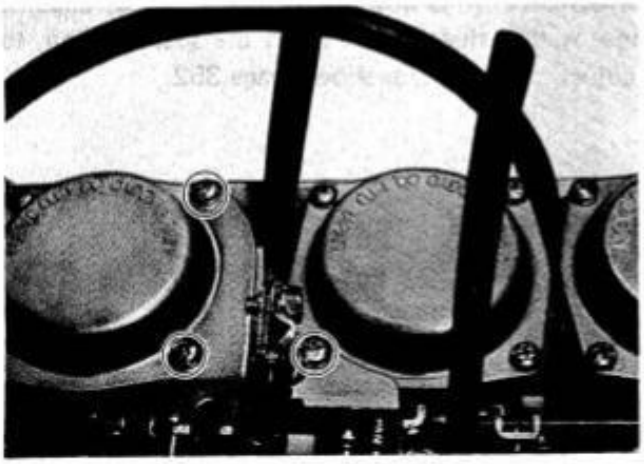

- Set each throttle valve in such a way that its top end ① meets the foremost bypass ②. This is accomplished by turning throttle valve stop screw ③ and balance screw ④.

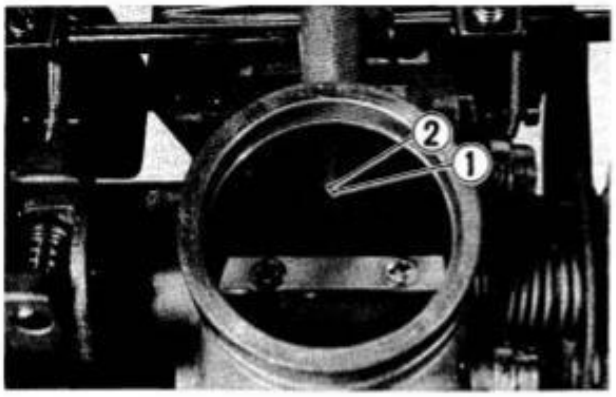

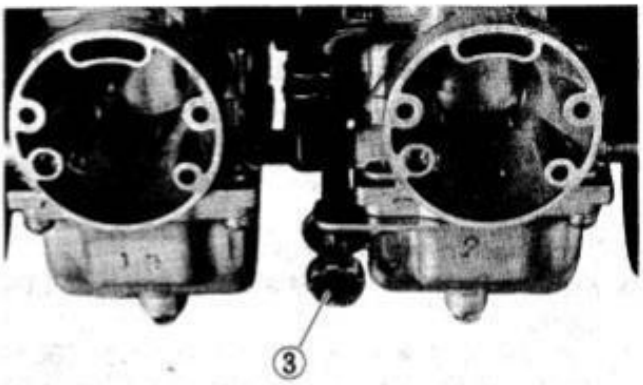

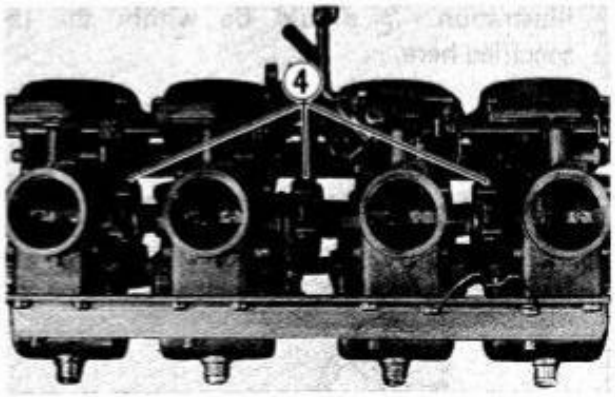

NOTE: When adjusting the throttle balance screws, adjusting order is as follows:
Ⓐ (for No. 2 carb.) → Ⓑ (for No. 1) → Ⓒ (for No. 4)

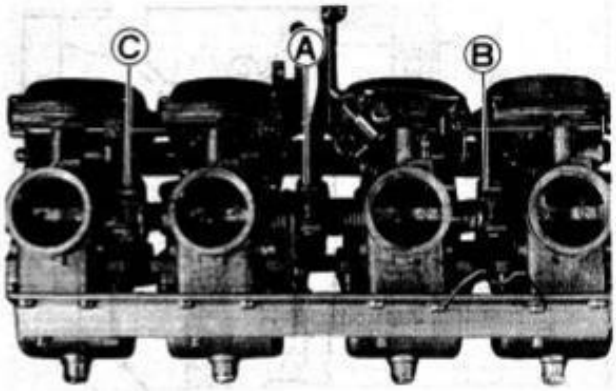

After each job is completed, mount the carburetor on the engine and the following adjustments are necessary.

* Engine idle r/min
* Throttle cable play
* Balancing carburetor

INSPECTION

FUEL LEVEL MEASUREMENT

To check the fuel level, proceed as follows:

Checking fuel level in each float chamber

1. Leave fuel cock lever in "ON" or "RES" position.
2. Place machine on center stand.
3. Remove float chamber drain plug and install the special tool.
4. Run the engine at the idling speed (1 000 – 1 200 r/min), and measure distance Ⓐ with the middle line of the level gauge aligned with the mating surface of the float bowl as shown in the illustration. Ⓐ should be within the range specified here.

Fuel level gauge	09913-14511
Distance Ⓐ: 4.5 - 5.5 mm (0.18 - 0.22 in)	

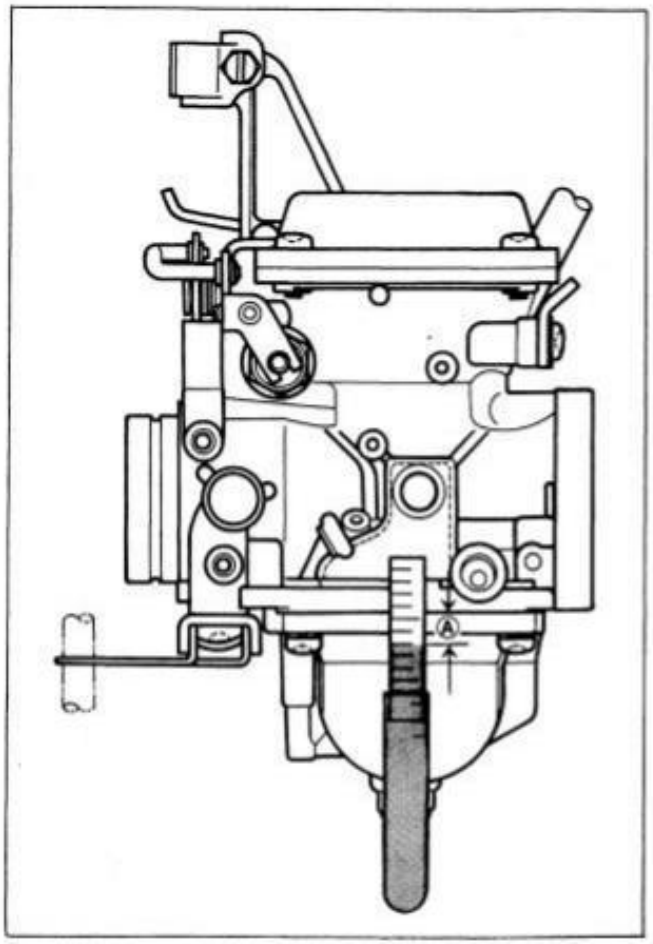

NOTE: When checking the fuel level, place the machine on the center stand. The fuel level should be center of the float chamber.

Fuel level adjustment

If distance Ⓐ is not within the specified range, it means that float height is off the specification, to adjust this height, as shown page 352.

BALANCING THE CARBURETORS

When any carburetor has been disassembled or replaced, check that the negative pressures (vacuum) in four carburetors are well balanced, using the carburetor balancer set in the following manner:

1. Place machine on center stand.
2. After warming up the engine completely, remove either No. 1 or No. 4 vacuum inlet screw, using a 4-mm hexagon wrench.

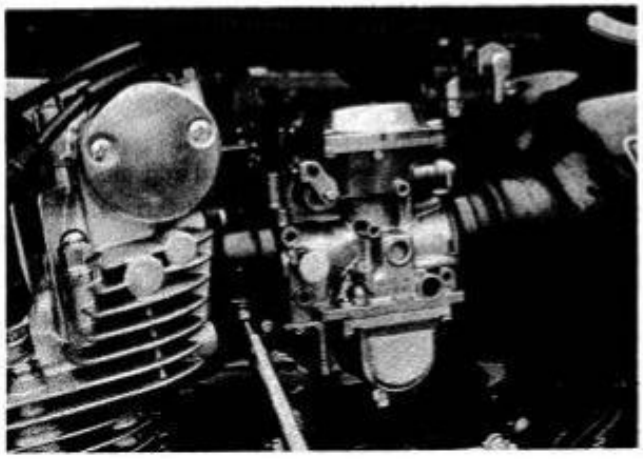

3. Tie one of the four rubber hoses of the carburetor balancer gauge to the adapter.
4. Start up the engine, and keep it running steadily at 1 500 - 2 000 r/min.

Carburetor balancer set	09913-13121

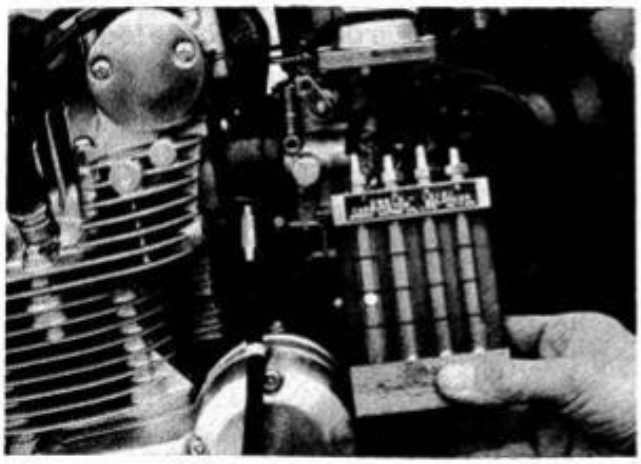

5. Turn the air screw of the gauge so that the vacuum acting on the tube of that hose will bring the steel ball in the tube to the center.

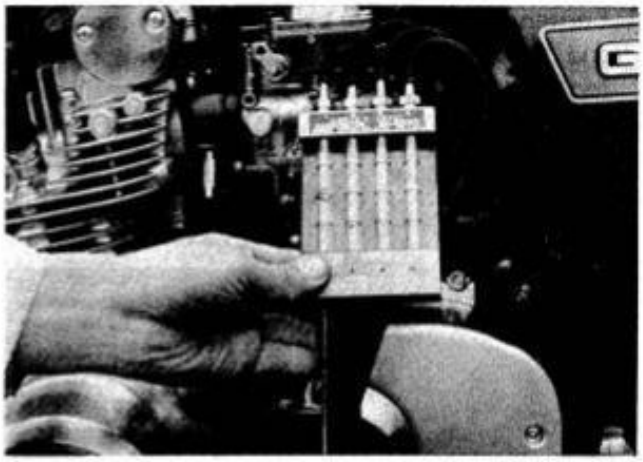

6. On the three other screws, follow the same procedure as above.
7. Remove the respective vacuum inlet screws and insert the adapters in the holes. Connect the balancer gauge hoses to these adapters, one hose to one adapter, and balance the four carburetors as follows:
8. When the balls in Nos. 1 and 4 carburetor balancers are on the same level and the other balls are on the lower position as shown below, all the four carburetors are well balanced.

NOTE: No. 2, 3 must be adjusted with the balls ½ their diameters lower for proper idling stability.

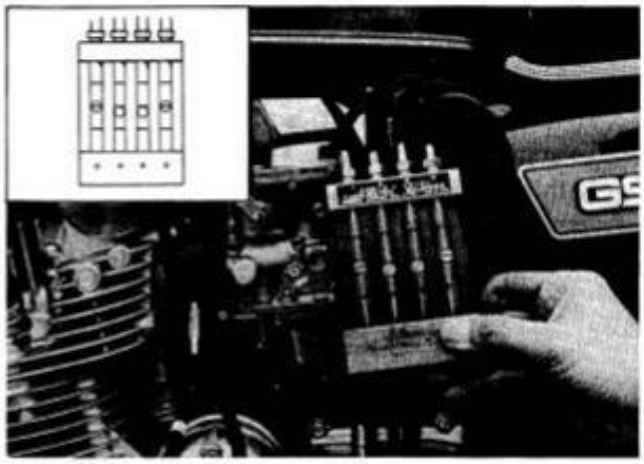

If the balls in Nos. 1 and 4 or in Nos. 2 and 3 carburetor balancers are off more than the radius of the ball, make an adjustment as follows:

1. Loosen throttle valve balancing screw lock nut, and by turning balancing screw, with special tool adjust the position of steel ball in balancer gauge.

Throttle valve adjust wrench	09913-14910

Adjusting order

A (for No. 2 carb) → B (for No. 1) → C (for No. 4)

NOTE: * If an adjustment is required, it is suggested that the fuel tank is removed and use separate fuel tank.
* Be sure to plug the fuel cock vacuum line.

2. After adjusting, tighten throttle valve balancing screw lock nut.

3. After this adjustment, adjust the idling speed to somewhere between 1 000 and 1 200 r/min with throttle stop adjusting screw.

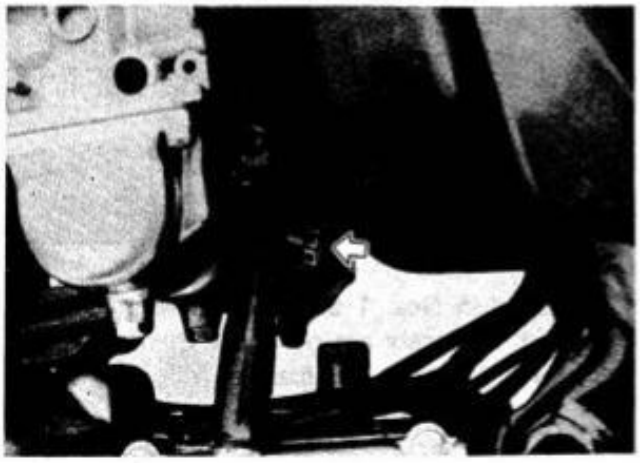

CAUTION: This check should be done as quick as possible. If adjustment requires a longer time, it is advisable to cool the engine by racing it to prevent engine overheating.

THROTTLE CABLE ADJUSTMENT

1. Loosen lock nut ①.
2. Adjust the cable slack by turning adjuster ② in or out to obtain the correct slack 0.5 - 1.0 mm (0.02 - 0.04 in).

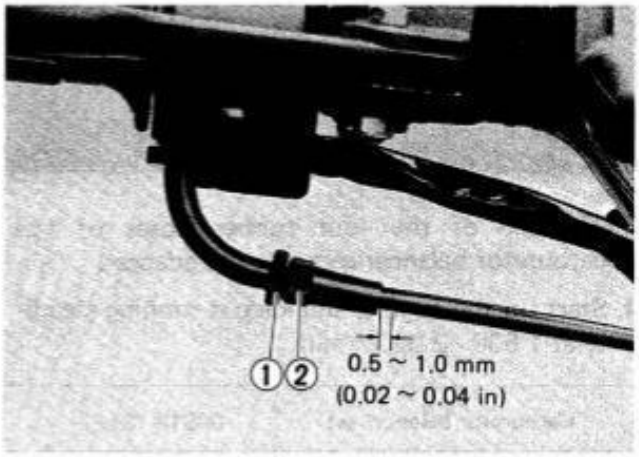

3. After adjusting the slack, tighten the lock nut.

CHARGING SYSTEM

DESCRIPTION

This motorcycle, the circuit of its charging system is indicated in the figure, is composed of AC generator, regulator/rectifier unit and battery.
The AC current generated from AC generator is rectified by rectifier and is turned into DC current, then it charges the battery.

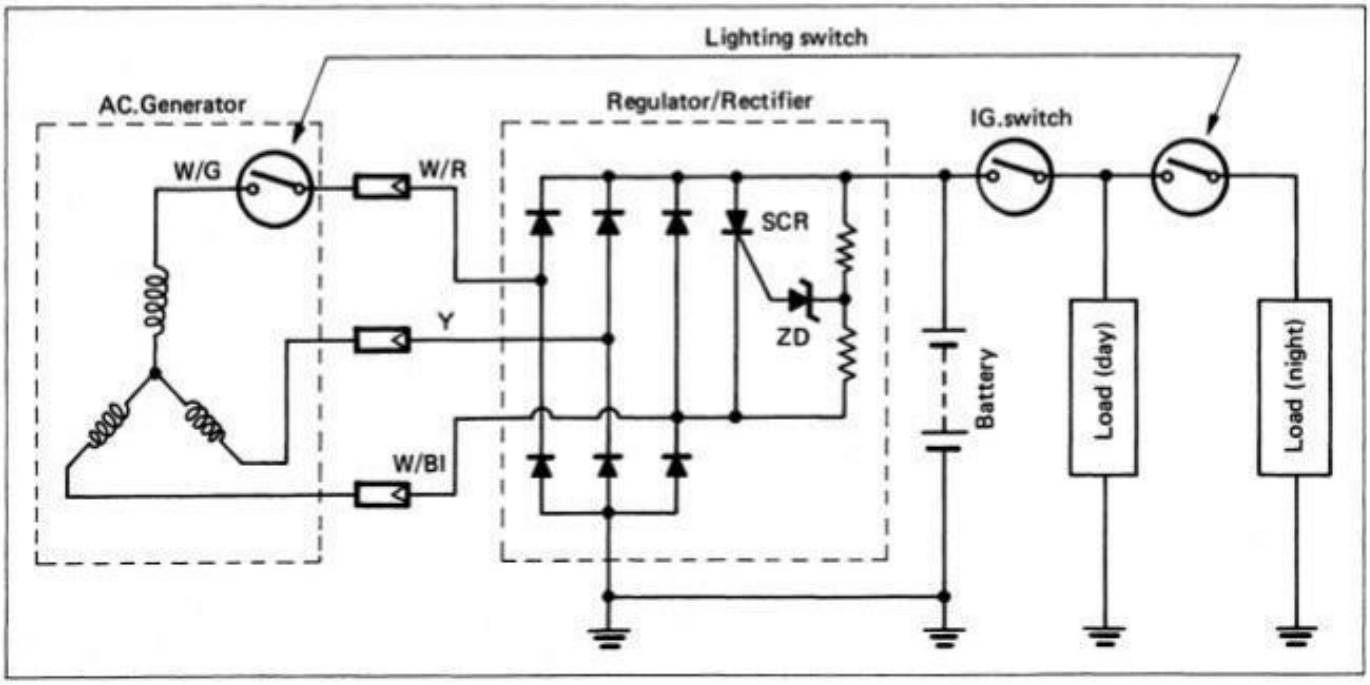

Function of Regulator

While the engine r/min is low and the generated voltage of AC generator is lower than the adjusted voltage of Regulator, the regulator does not function, incidentally the generated current charges the battery directly.

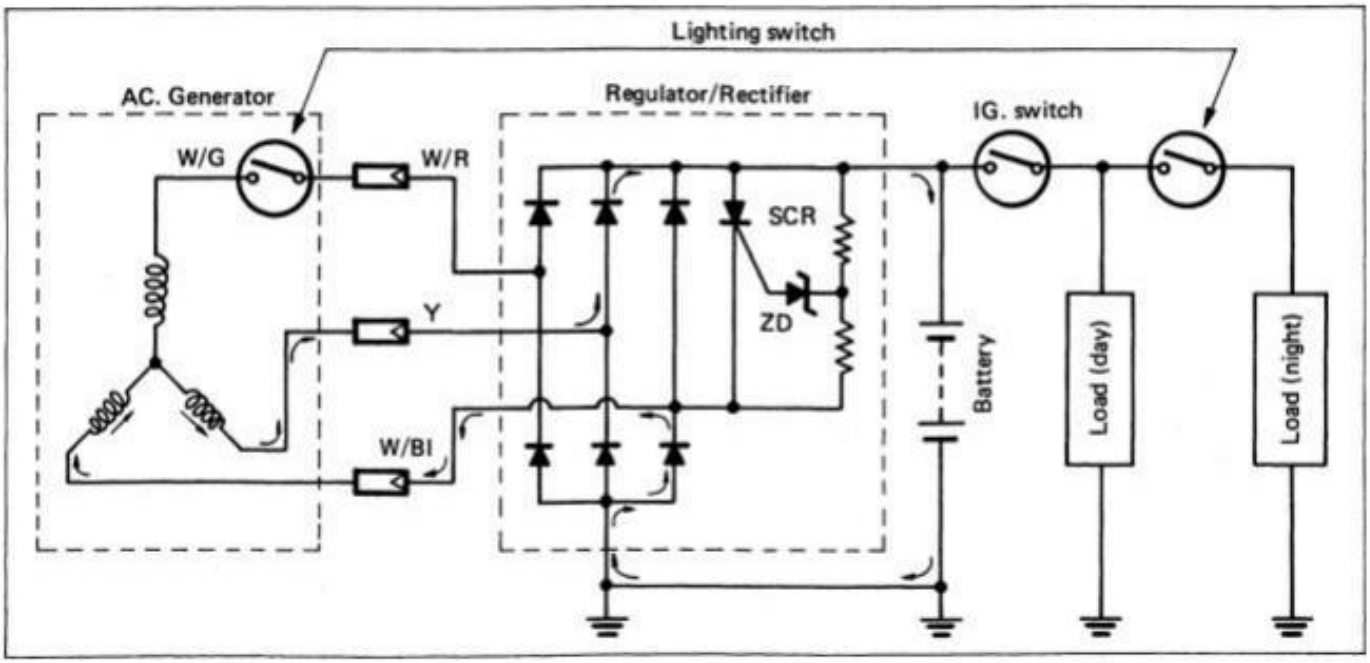

When the engine r/min becomes higher, the generated voltage of AC generator also becomes higher and the voltage between points Ⓐ and Ⓑ of regulator becomes high accordingly, and when it reaches the adjusted voltage of regulator, ZD (Zener diode) sends signal to the gate of SCR (Thyristor). Then the SCR becomes conductive to the direction from point Ⓒ to point Ⓓ . Namely at the state of this, the current generated from the AC generator gets through SCR without charging the battery and returns to AC generator again. At the end of this state, since the AC current generated from AC generator flows into the point Ⓓ, reverse current tends to flow to SCR, then the circuit of SCR turns to OFF mode and begins to charge the battery again. Thus these repetitions maintain charging voltage to the battery constant and protect it from over-charging.

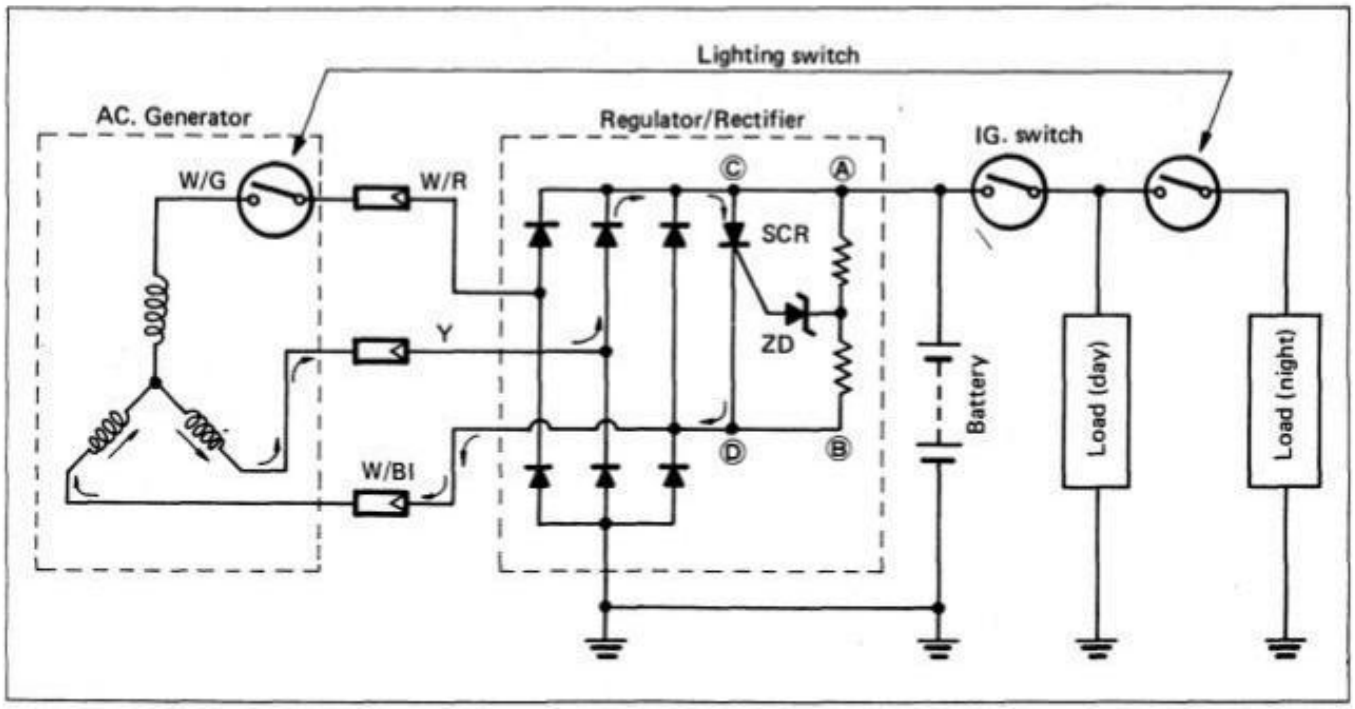

INSPECTION

CHARGING OUTPUT CHECK

- Start the engine and keep it running at 5 000 r/min with the lighting switch turned ON (High position).
- Using pocket tester, measure the DC voltage between the battery terminals.

  If the tester reads under 14V or over 15.5V, the regulator/rectifier is faulty.

NOTE: When making this test, be sure that the battery is in a full-charged condition.

STD charging output	14 – 15.5 V (DC) at 5 000 r/min

09900-25002	Pocket tester

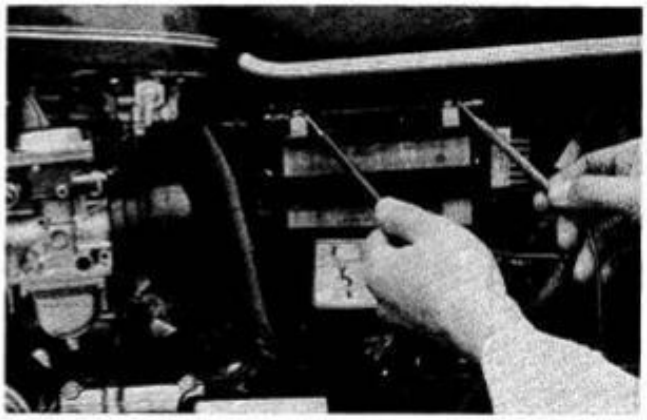

AC GENERATOR NO-LOAD PERFORMANCE

- Disconnect the three lead wires of the AC generator terminal.
- Start the engine and keep it running at 5 000 r/min.
- Using the pocket tester, measure the AC voltage between the three lead wires.

  If the tester reads under 80V, the AC generator is faulty.

STD No–load performance	80 V (AC) or Over at 5 000 r/min

09900-25002	Pocket tester

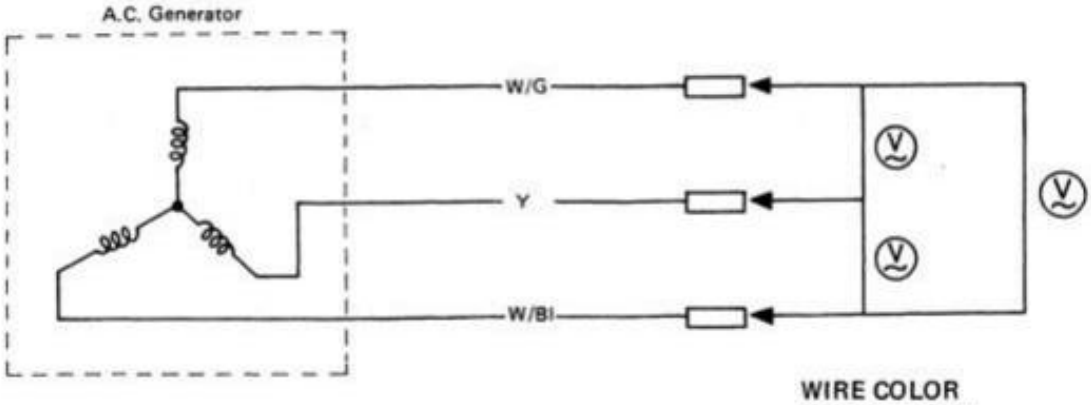

WIRE COLOR
Y . . . . . Yellow
W/Bl . . . . White with Blue tracer
W/G . . . . . White with Green tracer

Using pocket tester, check the continuity between the lead wires of the stator.
Also check that the stator core is insulated.

NOTE: When making this test, it is not necessary to remove the A.C. generator from the engine.

Specification	Approx. 1Ω

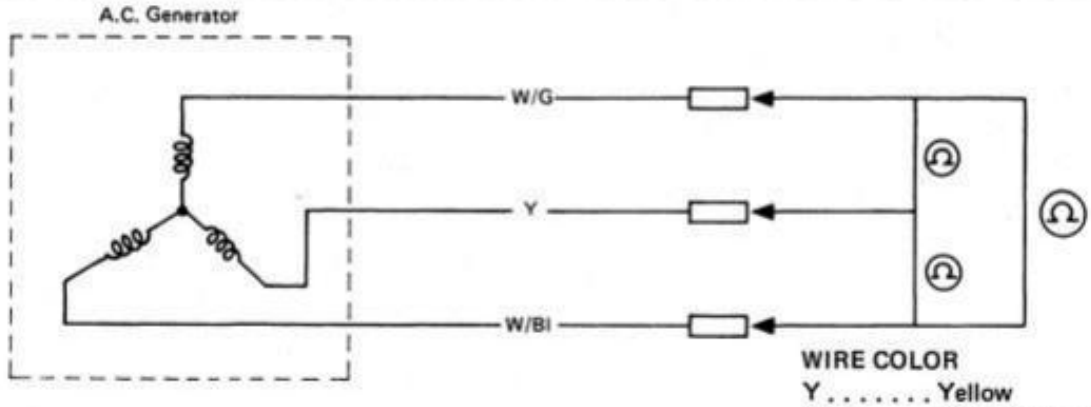

WIRE COLOR
Y . . . . . Yellow
W/Bl . . . . White with Blue tracer
W/G . . . . . White with Green tracer

Tester Range: Ω x 1

REGULATOR/RECTIFIER

Using pocket tester, check the continuity between the lead wires as shown.

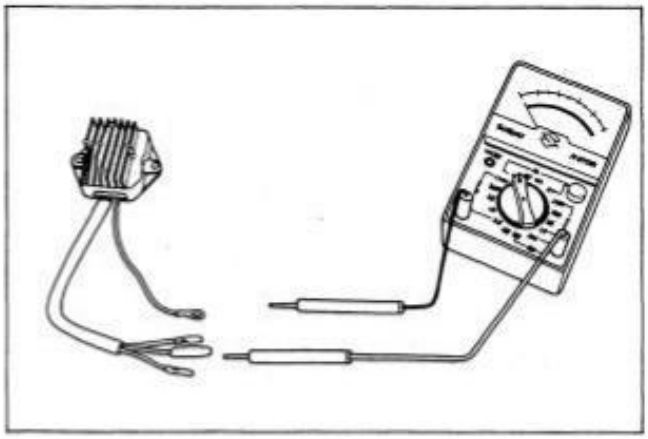

Regulator/Rectifier checking chart:

NORMAL DIRECTION: CONTINUITY

(+) probe of tester	(–) probe of tester
R	Y
	W/Bl
	W/R
	B/W
Y	B/W
W/Bl	
W/R	

REVERSE DIRECTION: NO CONTINUITY

(+) probe of tester	(–) probe of tester
Y	R
W/Bl	
W/R	
B/W	
B/W	W/Bl
	W/R
	Y

FULL-TRANSISTORIZED IGNITION SYSTEM

DESCRIPTION

A fully transistorized ignition system is now employed on the GS550. Its primary advantages are:

* Trouble free operation due to elimination of contact breaker points which can become contaminated.
* Ignition timing is maintained properly at all times and requires no maintenance.
* Free from arcing and provides the ignition coil with stable secondary voltage.
* Excellent vibration and moisture resistance.

TRANSISTOR

Transistor functions can be divided into four main functions:

1. amplification
2. switching
3. oscillation
4. modulation

These functions are utilized in the ignition system employed on the GS550.
Transistors are divided into two groups, those being of the NPN and PNP types, and the transistors used in the GS550 model is of the NPN type only, works an amplifier and switching device.

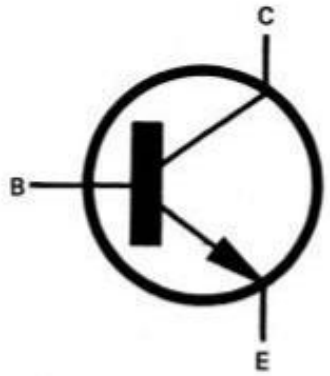

B: BASE
C: COLLECTOR
E: EMITTER

Each transistor has three terminals identified as the Base (B), Collector (C), and Emitter (E), and operation is as follows:
On a NPN type the base is the controlling terminal of the transistor operation. On this type, the base utilizes only a positive or incoming signal to do the "ON", or "OFF" switching. The collector is the terminal where voltage is supplied to the transistor and the emitter is the terminal for passing this current for useage when the base has the proper "signal". Usually the voltage applied across the collector to the emitter is much larger than that needed at the base. This allows a relatively low voltage at the base to control large working voltages across the collector to the emitter.
The transistor ignition system used on the GS550 is the KOKUSAN brand and consists of a signal generator, which employs a rotor and two pick-up coils, the transistor unit, ignition coils, and spark plugs.

SIGNAL GENERATOR

The signal generator is mounted on the right hand side of the engine in the area commonly used for the contact breaker points. It is comprised of a magnet embedded rotor attached to a mechanical advance mechanism and two pick-up coils, with iron plates at their bases, affixed to a plate. Each pick-up coil consists of a coil or wire and a yoke or coil and is mounted 180° apart on the plate.

As the rotor magnet is turned past the coils, AC current is produced and used for switching within the transistor unit.

The transistor unit controls power to the ignition coils and causes the spark plugs to fire at the proper time.

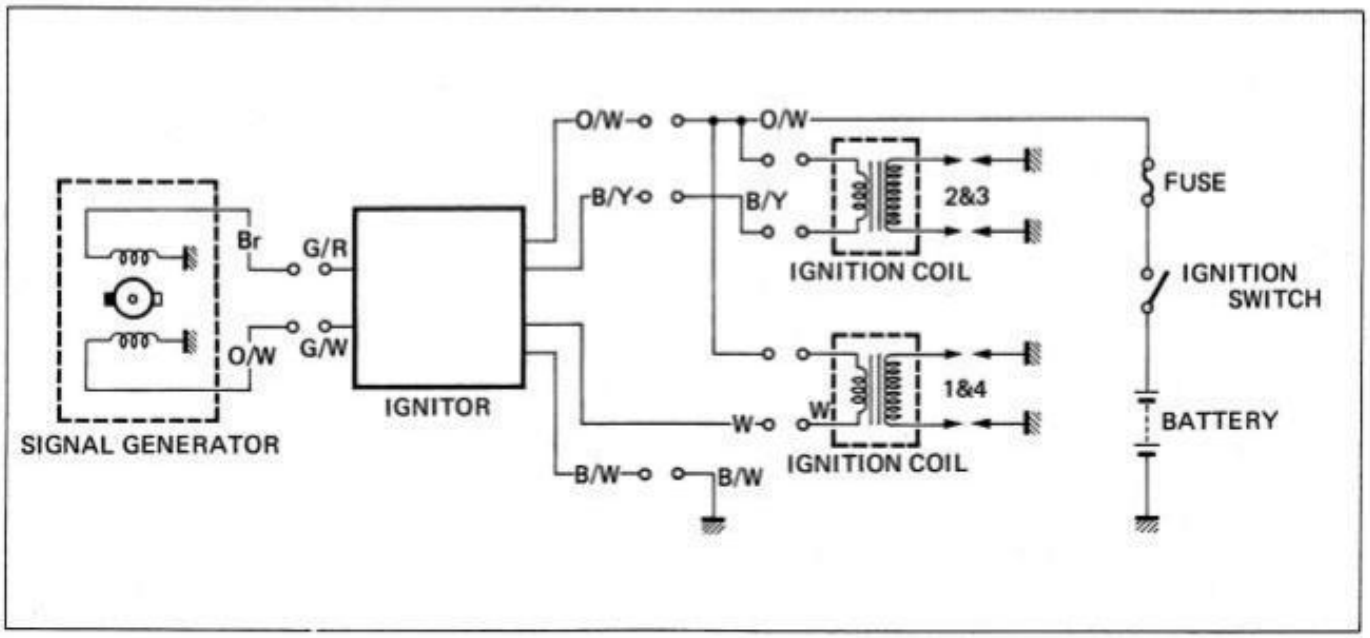

INSPECTION

Measure the resistance between lead wires.

If the resistance noted to show infinity or too low a resistance value must be replaced.

09900-25002	Pocket tester

S.T.D. resistance	
G/W – B/W	60 – 80Ω

STEERING STEM

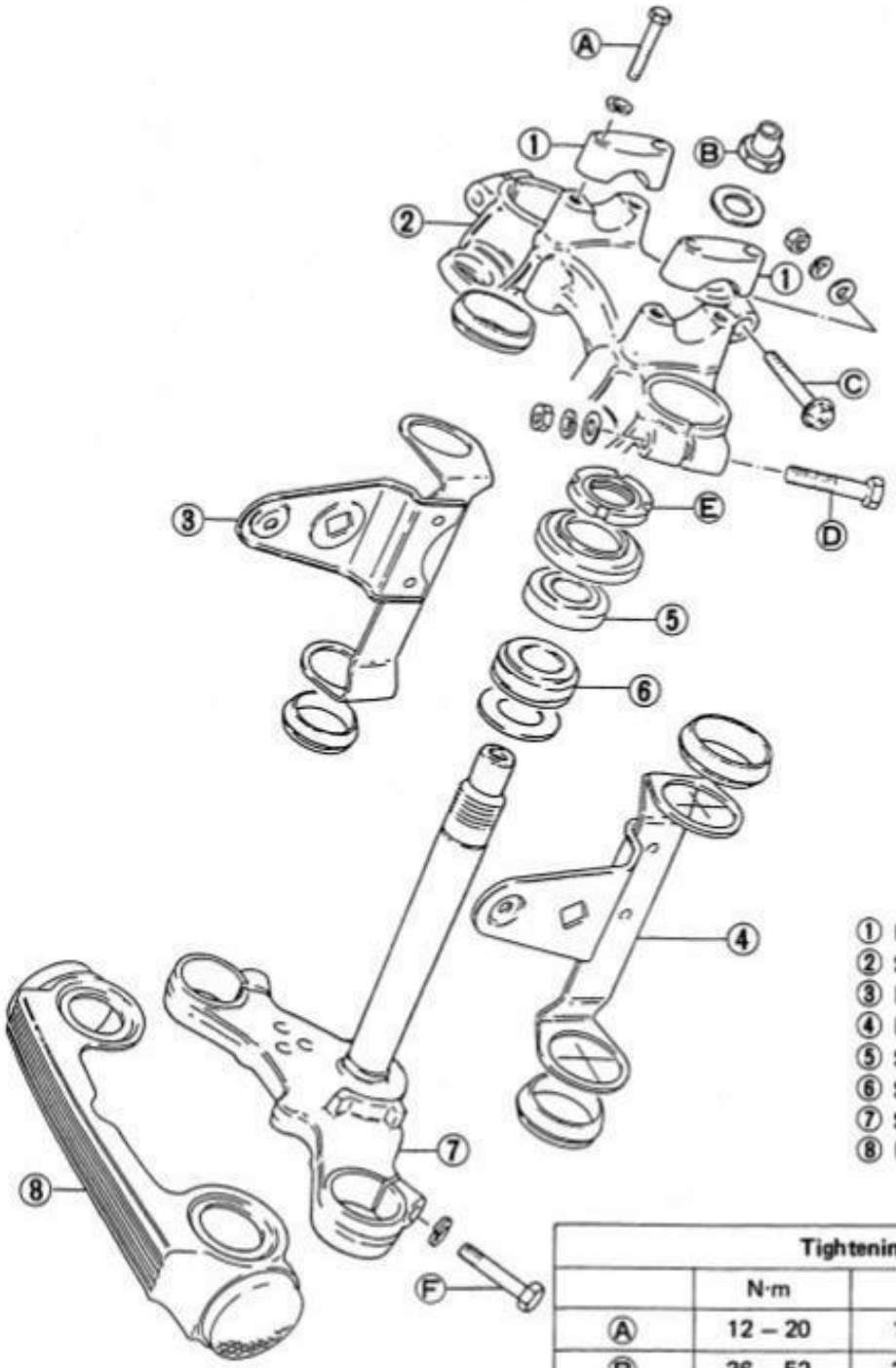

① Handlebar clamp
② Steering stem upper bracket
③ Headlight bracket (R)
④ Headlight bracket (L)
⑤ Steering stem bearing (Upper)
⑥ Steering stem bearing (Lower)
⑦ Steering stem lower bracket
⑧ Front fork cover

Tightening torque			
	N·m	kg-m	lb-ft
Ⓐ	12 – 20	1.2 – 2.0	8.5 – 14.5
Ⓑ	36 – 52	3.6 – 5.2	26.0 – 37.5
Ⓒ	15 – 25	1.5 – 2.5	11.0 – 18.0
Ⓓ	20 – 30	2.0 – 3.0	14.5 – 21.5
Ⓔ	40 – 50	4.0 – 5.0	29.5 – 36.0
Ⓕ	20 – 30	2.0 – 3.0	14.5 – 21.5

REMOVAL AND DISASSEMBLY

- The steering stem can be removed from the machine in the same manner as in the page 85. Therefore, we discuss the subsequent operations.
- Remove the screw and disconnect the choke cable from the carburetor.

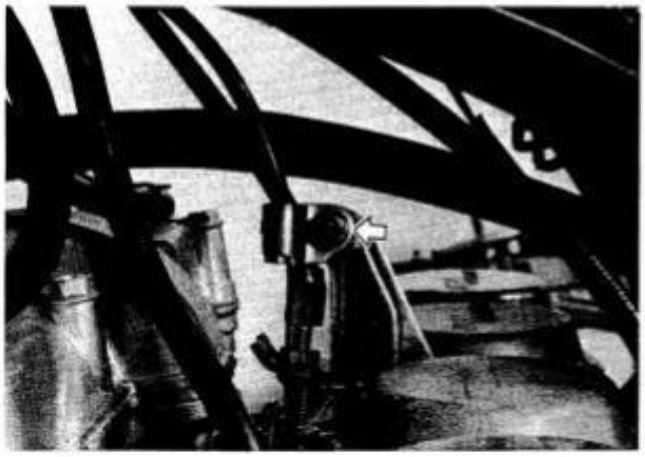

- Loosen the lock nut, turn the choke knob body counterclockwise, and remove the choke cable from the steering stem head pipe.

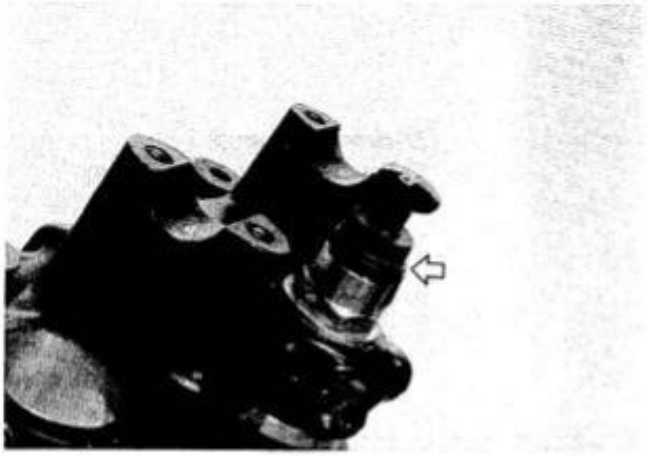

- Remove the steering stem head nut and loosen clamp bolt.

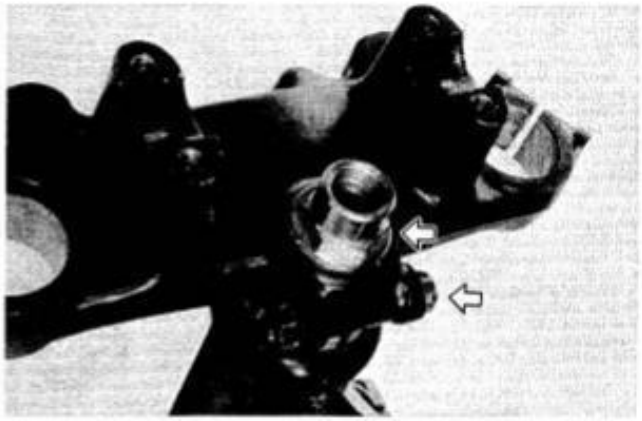

- Take off the steering stem upper bracket.

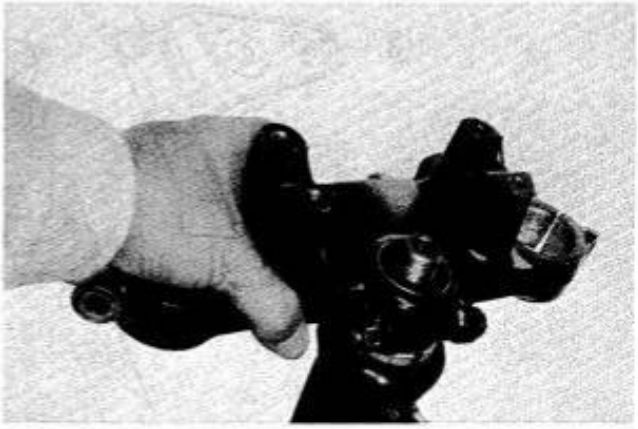

- Remove the steering stem nut by using special tool.

NOTE: Hold the steering stem lower bracket by hand to prevent dropping.

09940-14910	Steering nut socket wrench

- Draw out the upper bearing and the steering stem lower bracket.

- Draw out the lower bearing by using special tool.

09941-84510	Bearing inner race remover

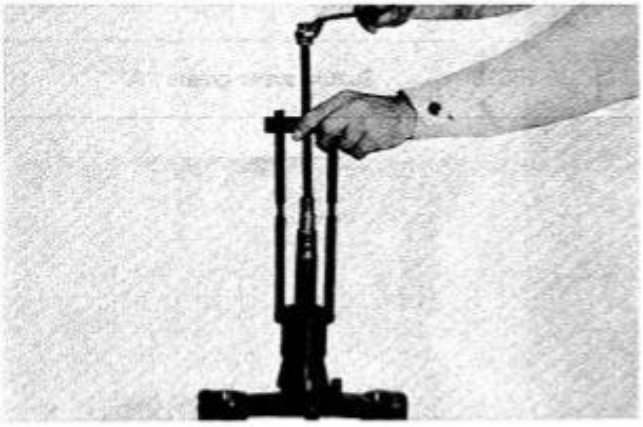

- Draw out the bearing outer races upper and lower by using special tool.

09941-54910	Steering race remover
09941-74910	Steering bearing installer

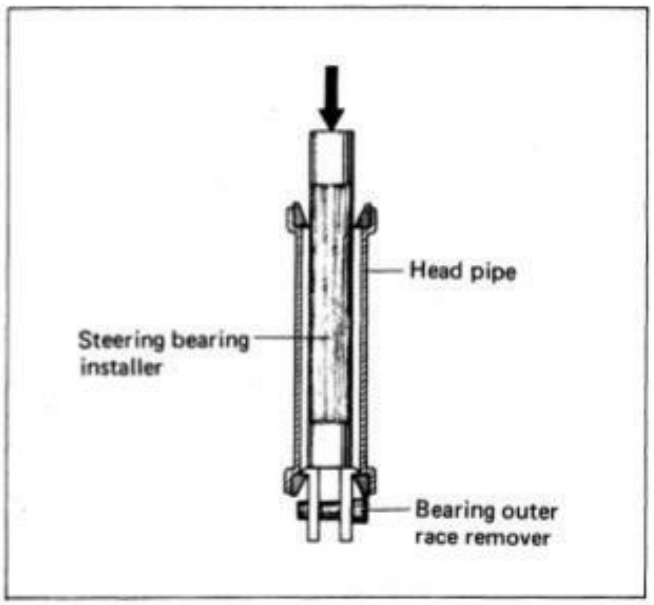

REASSEMBLY

Reassemble and remount the steering stem in the reverse order of disassembly and removal and also carry the following steps:

OUTER RACES

Press in the upper and lower outer races using special tool.

09941-34511	Steering outer race installer

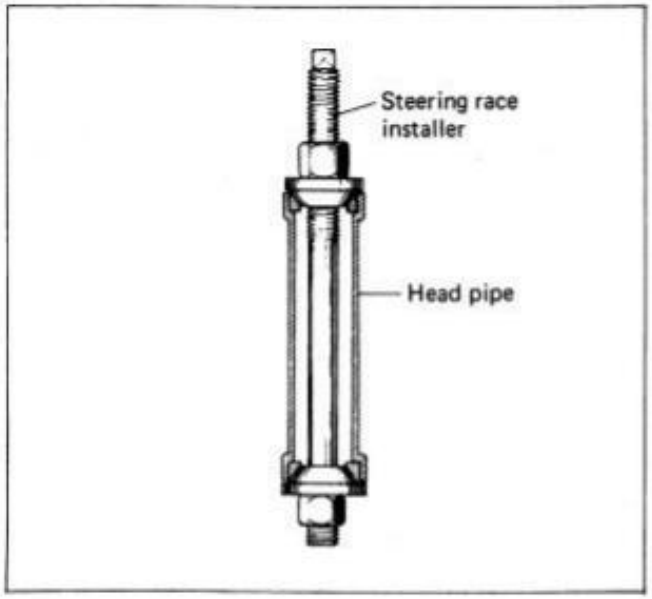

BEARINGS

Press in the lower bearing by using special tool.

09941-74910	Steering bearing installer

Apply grease upper and lower bearing before remount the steering stem.

99000-25010	Suzuki super grease "A"

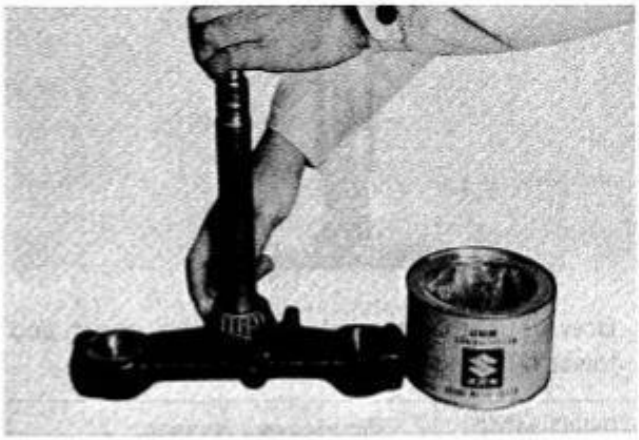

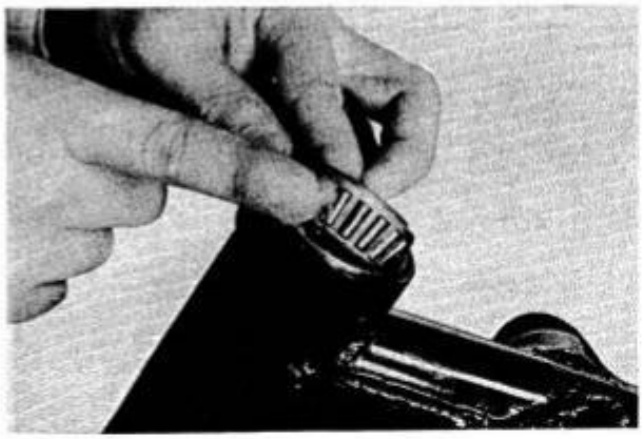

STEM NUT

Tighten the steering stem nut by using special tool with specified torque.

09940-14910	Steering nut socket wrench

Tightening torque	40 – 50 N·m [4.0 – 5.0 kg-m 29.0 – 36.0 lb-ft]

Turn the steering stem left and right, lock-to-lock, five or six times to seat the bearings.
Loosen the steering stem nut approximately 1/4 – 1/2 turn.

NOTE: This adjustment will vary from motorcycle to motorcycle.

After performing the adjustments and installing the steering stem head, "rock" the front wheel assembly backward and forward to ensure that there is no play and that the procedure was accomplished correctly. If play is noticeable, repeat the above steps.

With the front wheel off the ground, check that the front fork turns smoothly and easily left to right. With a slight amount of pressure being applied to the end of the handlebars, the weight of the front wheel alone should allow the front forks to slowly move to their extreme position either left or right.

FRONT MASTER CYLINDER

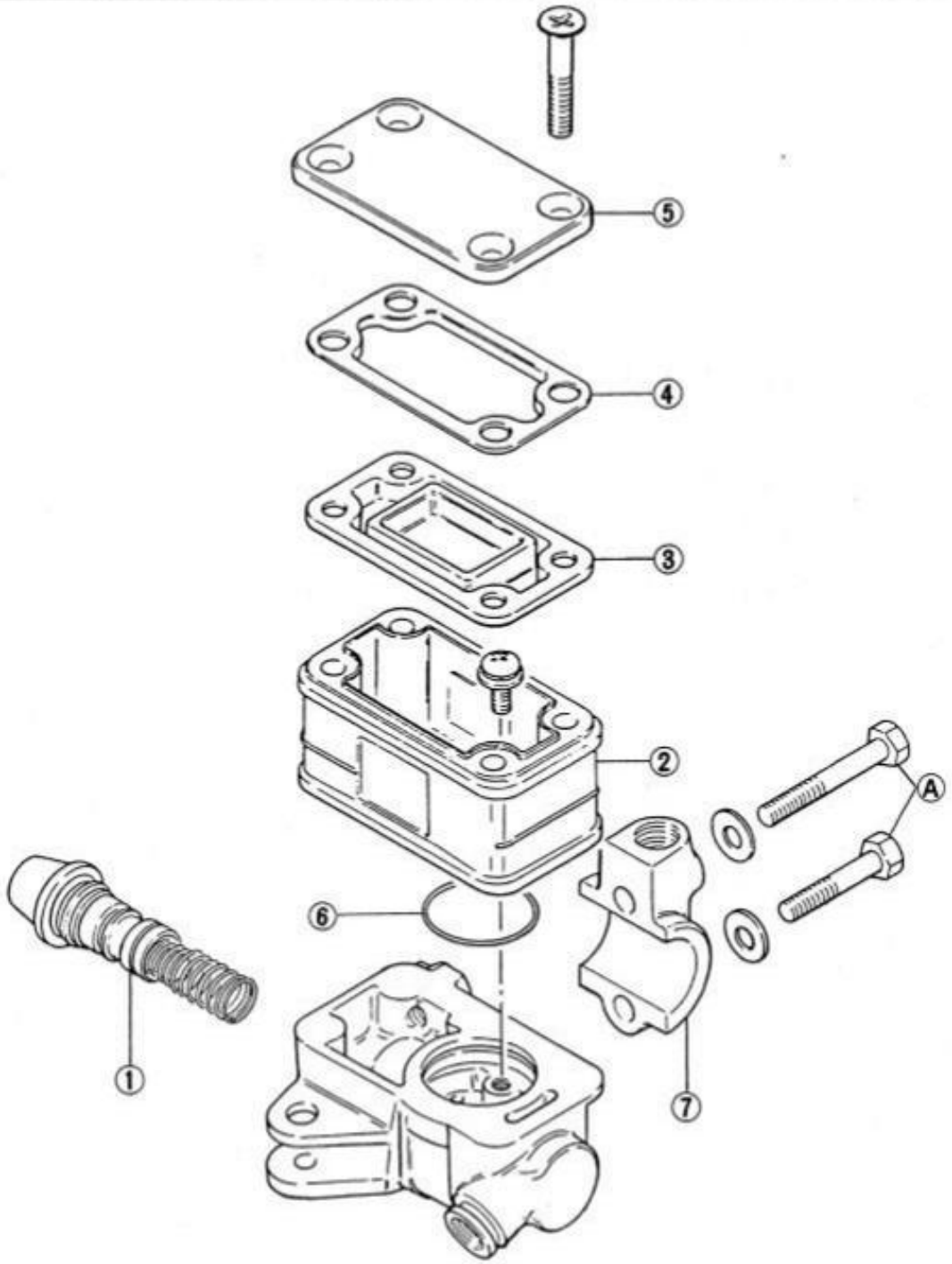

① Piston & cup set
② Reservoir
③ Diaphragm
④ Plate
⑤ Cap
⑥ O ring
⑦ Holder

Tightening torque			
	N·m	kg-m	lb-ft
Ⓐ	5 – 8	0.5 – 0.8	3.5 – 6.0

MASTER CYLINDER REMOVAL AND DISASSEMBLY

- Take off front brake light switch.

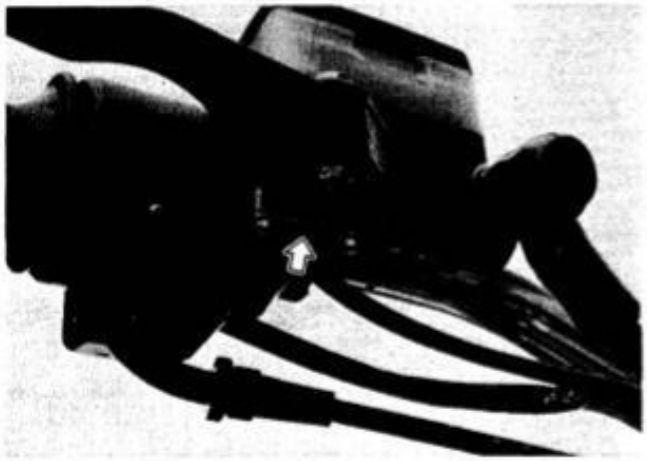

- Remove front brake lever.

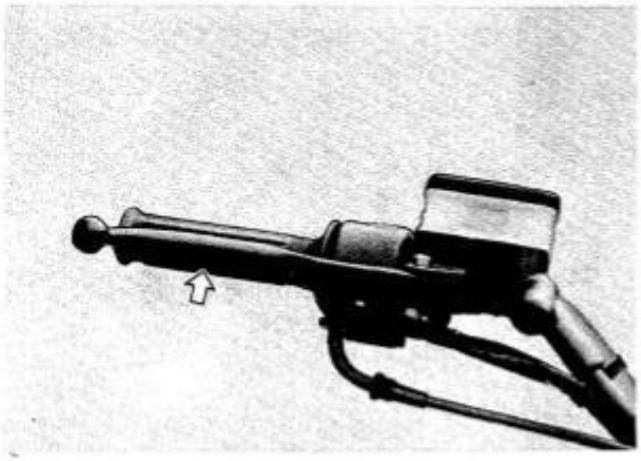

- Place a rag underneath the union bolt on the master cylinder to catch spilled drops of brake fluid. Unscrew the union bolt and disconnect the brake hose/master cylinder joint.

CAUTION: Immediately completely wipe off any brake fluid adhering to any part of motorcycle. The fluid reacts chemically with paints, plastics, rubber materials, etc. and will damage them severely.

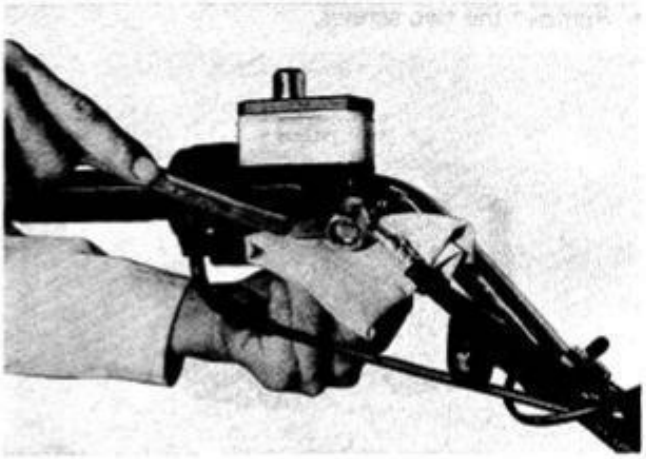

- Remove master cylinder ass'y after removing two fitting bolts.

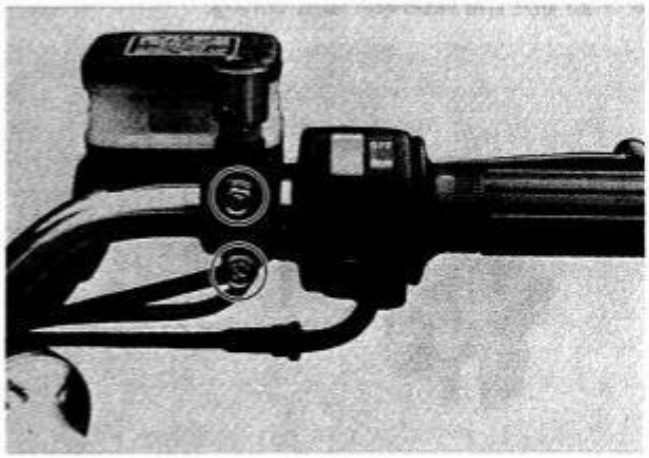

- Remove filler cap and drain brake fluid.

- Remove the two screws.

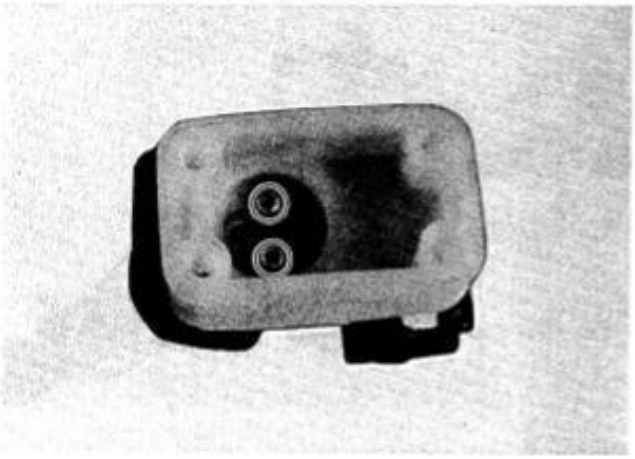

- Pull out the reservoir and O ring.

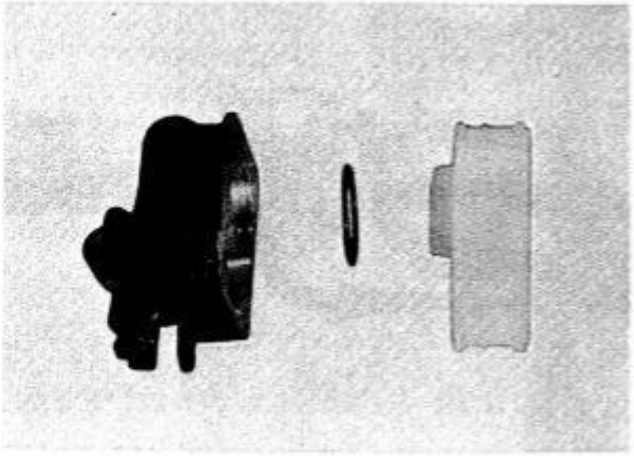

- Draw out dust seal boot.

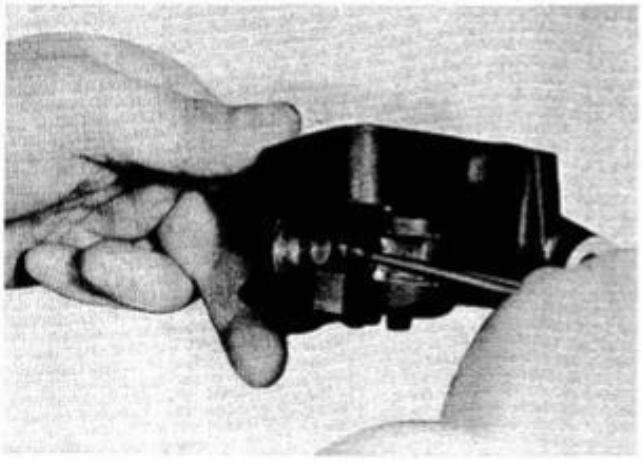

- Remove circlip by using special tool.

09900-06108	Snap ring pliers

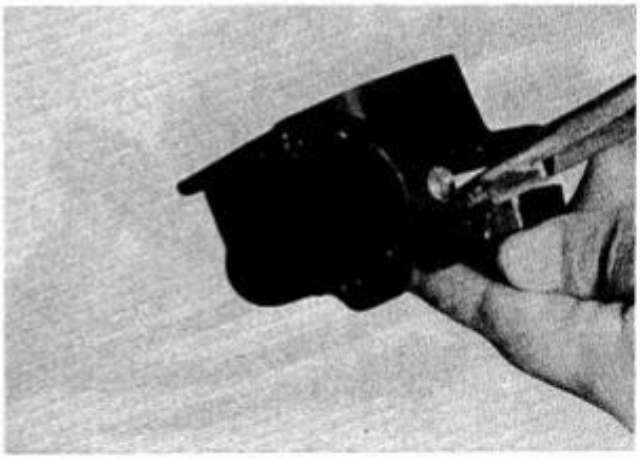

- Pull out piston, primary cup and spring.

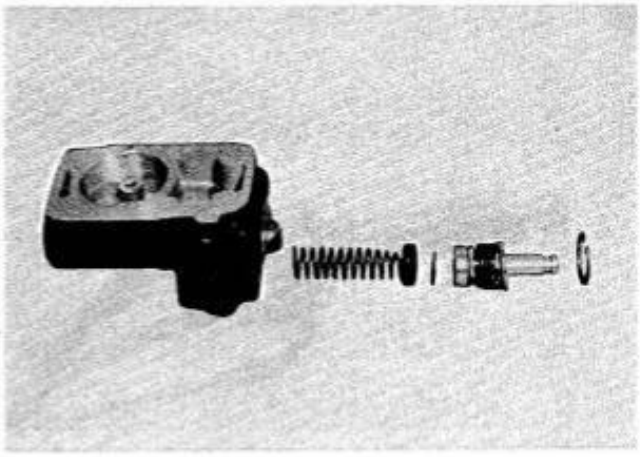

MASTER CYLINDER INSPECTION

- Inspect the cylinder bore wall for any scratch or other damage.

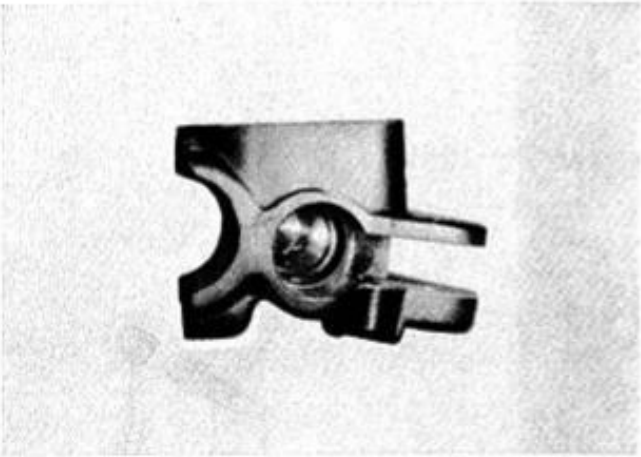

- Inspect the piston surface for scratch or other damage.

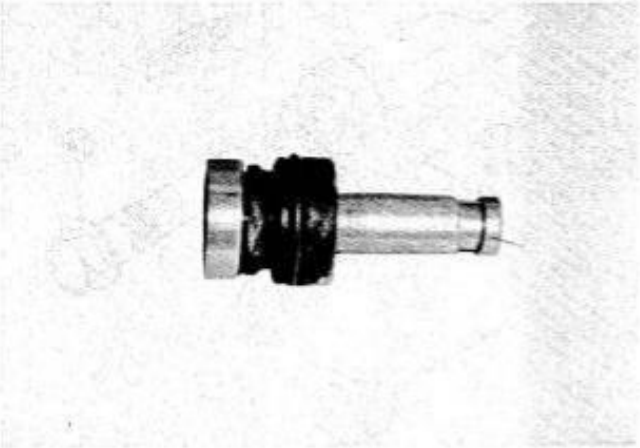

- Inspect the primary cup, secondary cup and dust seal boot for damage.

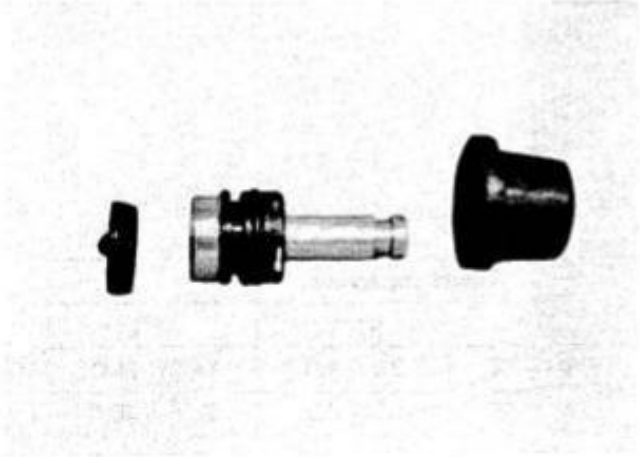

MASTER CYLINDER REASSEMBLY

- Reassemble the master cylinder in the reverse orders of disassembly and by taking the following steps:

CAUTION: Wash the master cylinder components with fresh brake fluid before reassembly. Never use cleaning solvent or gasoline to wash them.
Apply brake fluid to the cylinder bore and all the internals to be inserted into the bore.

- When remount the master cylinder to the handlebars, first tighten the clamp bolt for upside as shown.

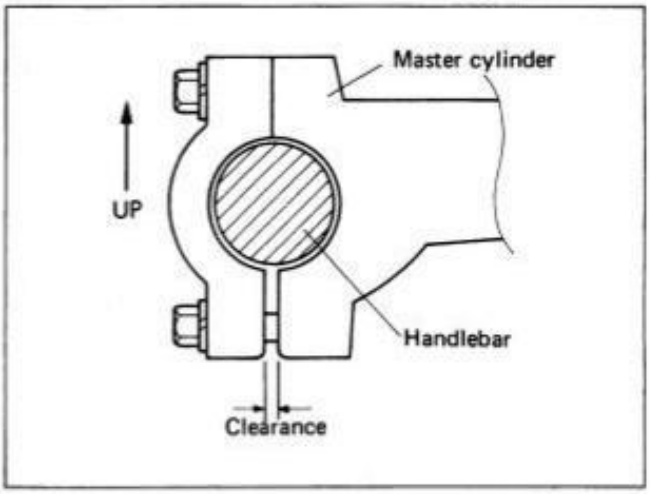

CAUTION: Adjust the front brake light switch after installation.
Bleeding the air after reassembling master cylinder. (See page 115)

FRONT CALIPER

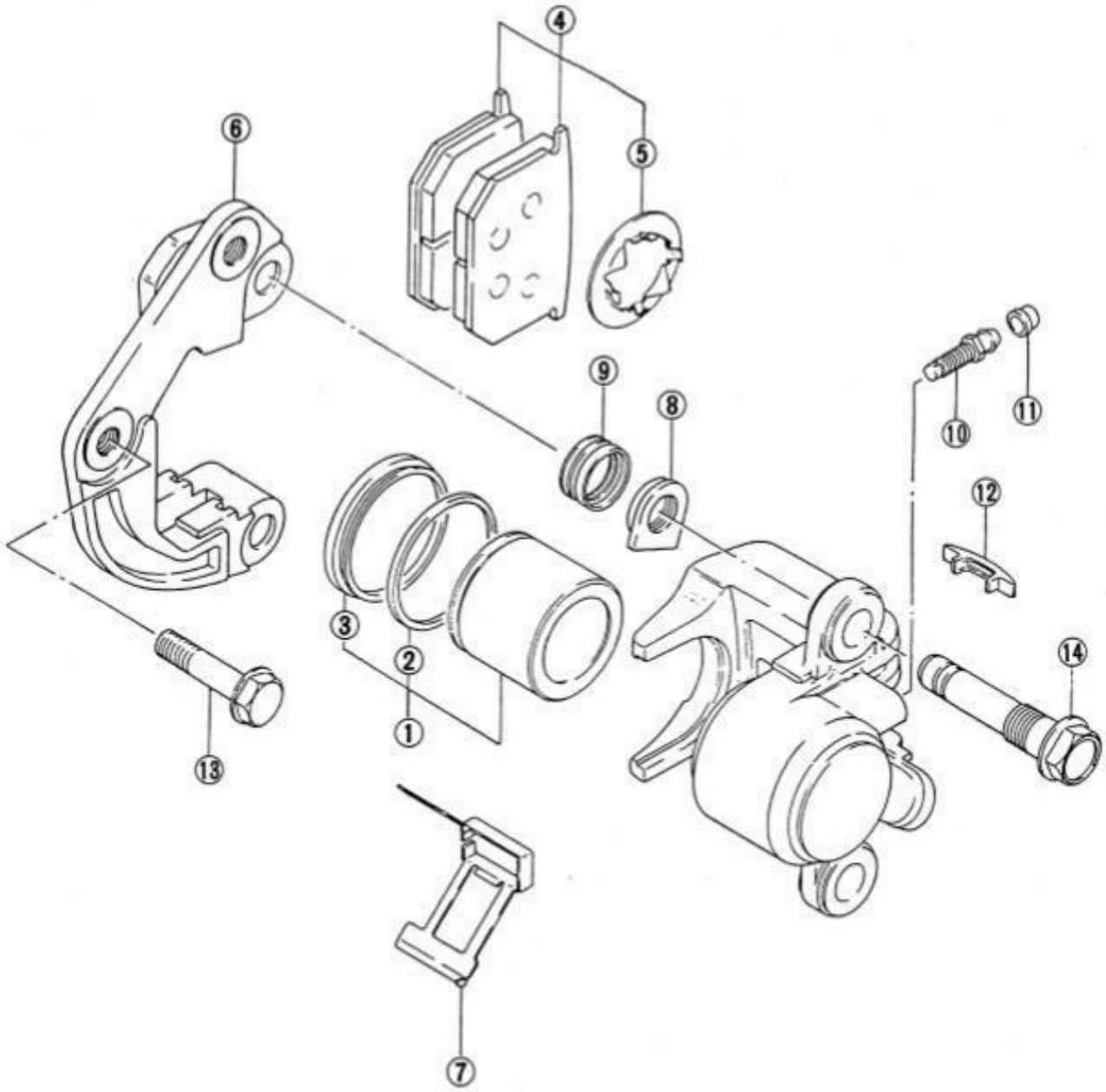

① Piston set
② Piston seal
③ Piston boot
④ Pad set
⑤ Pad shim
⑥ Caliper holder
⑦ Spring
⑧ Nut
⑨ Boot
⑩ Bleeder
⑪ Bleeder cap
⑫ Cover
⑬ Bolt
⑭ Bolt

	Tightening torque		
	N·m	kg·m	lb·ft
⑬	20 – 40	2.0 – 4.0	14.5 – 29.0
⑭	40 – 55	4.0 – 5.5	29.0 – 40.0

BRAKE PAD REPLACEMENT

- Remove two bolts and take off caliper.

CAUTION: Do not operate the brake lever when removing the caliper.

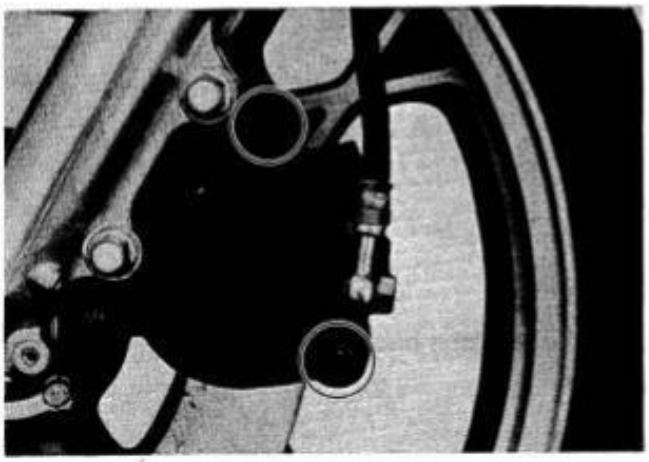

- Pull out brake pads.

CAUTION: Replace the brake pad with a set, otherwise brake performance will be adversely affected.

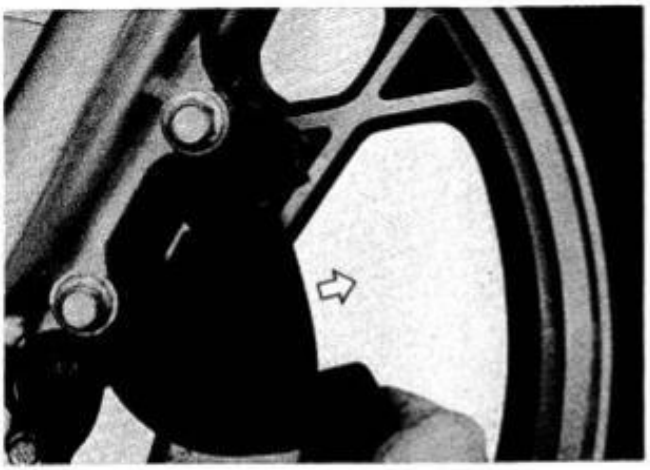

CAUTION: Do not apply pad grease, when installing the brake pads.

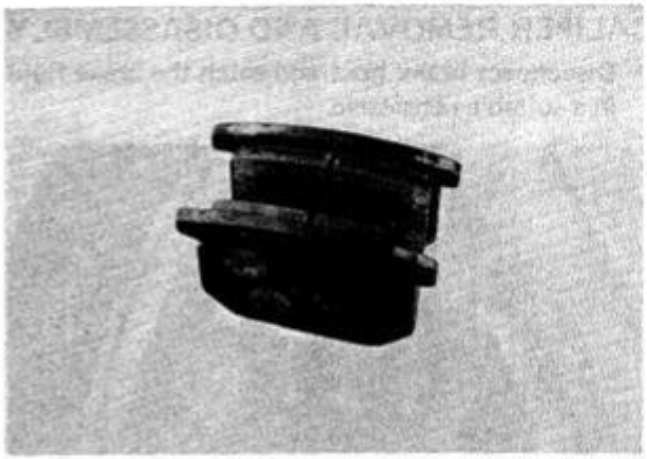

NOTE: Place on the [illegible] when installing the caliper.

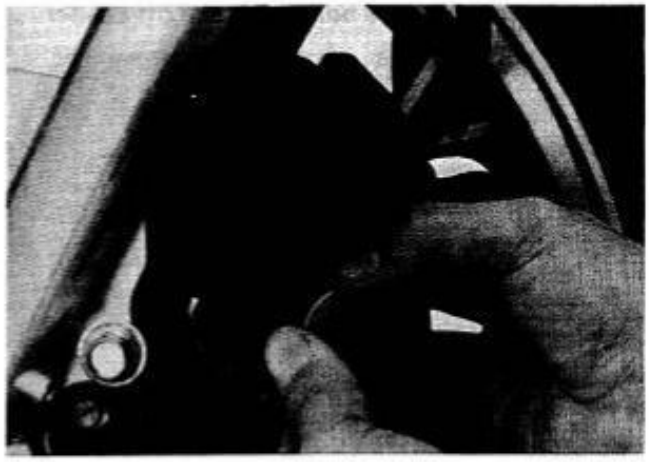

- Tighten the caliper axle bolts with specified torque.

Tightening torque	15 – 20 N·m [1.5 – 2.0 kg·m 11.0 – 14.5 lb·ft]

CALIPER REMOVAL AND DISASSEMBLY

- Disconnect brake hose and catch the brake fluid in a suitable receptacle.

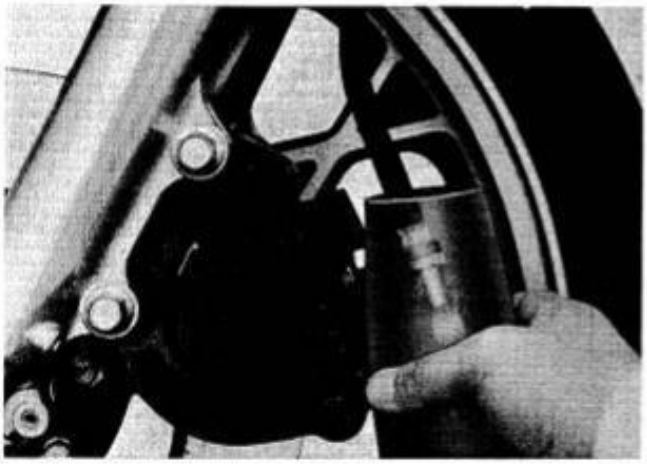

- Remove caliper axle bolts and take off caliper.

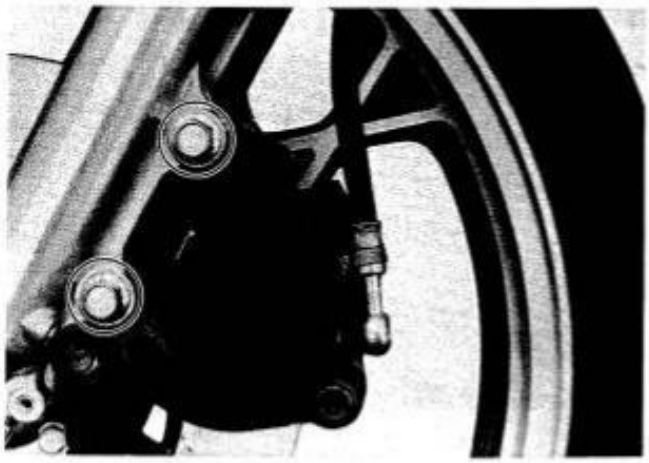

- Place a rag over the piston to prevent popping up. Draw out the piston by using air gun.

CAUTION: Do not use high pressure air for preventing piston damage.

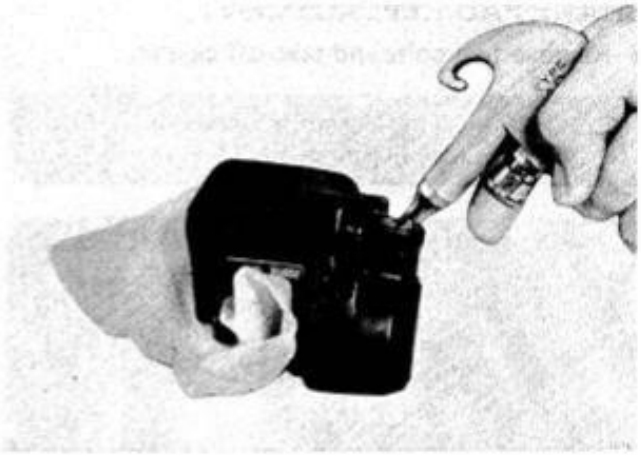

- Remove piston boot and piston seal.

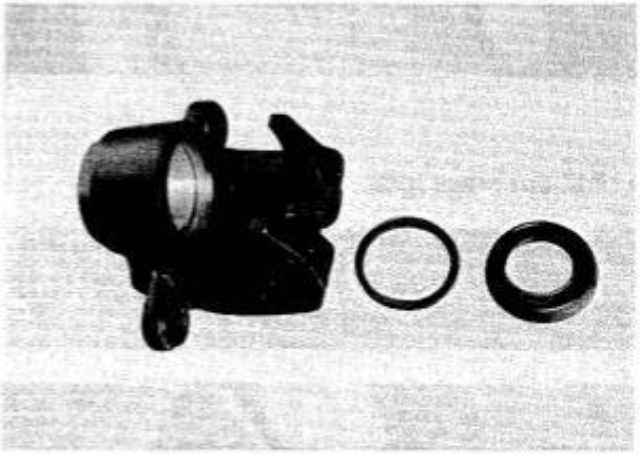

CALIPER AND DISC INSPECTION

- Inspect the cylinder bore wall for nick, scratch or other damage.

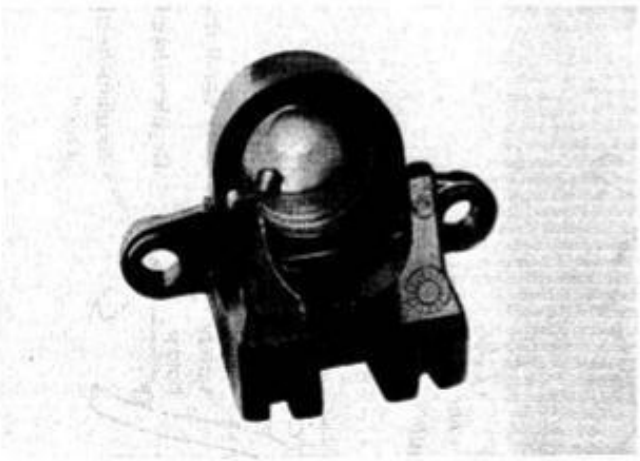

- Inspect the piston surface for any flaw or other damage.

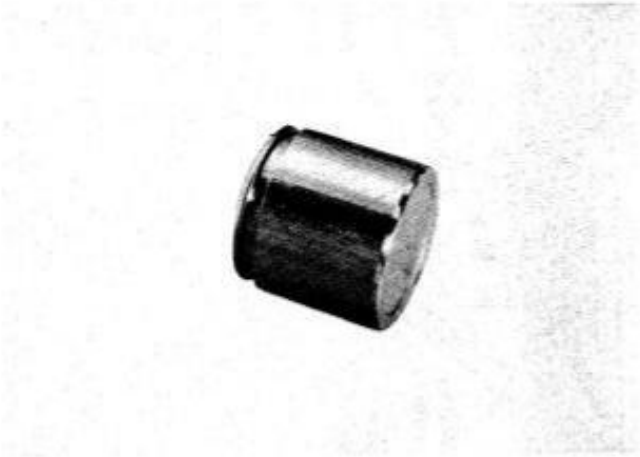

- Inspect the each rubber parts for damage and wear.

CALIPER REASSEMBLY

- Reassemble the caliper in the reverse orders of disassembly and by taking the following steps:

CAUTION: Wash the caliper components with fresh brake fluid before reassembly. Never use cleaning solvent or gasoline to wash them.
Apply brake fluid to the caliper bore and piston to be inserted into the bore.

- Apply grease to the caliper axle bolts.

99000-25100	Brake pad grease

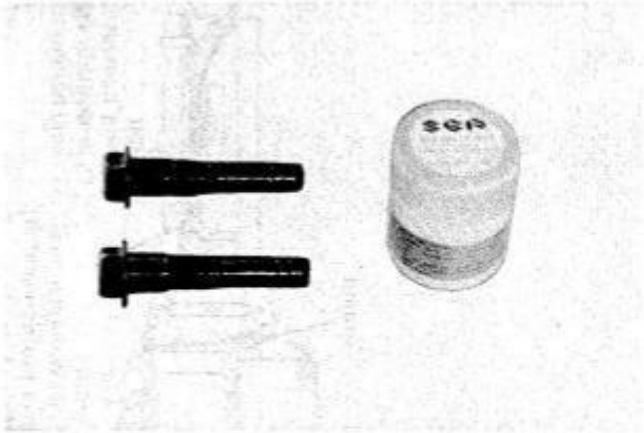

- Tighten the caliper axle bolts and caliper mounting bolts with specified torque.

	Tightening torque
Caliper axle bolt	40 - 55 N·m [4.0 - 5.5 kg-m 29.0 - 40.0 lb-ft]
Caliper bolt	20 - 40 N·m [2.0 - 4.0 kg-m 14.5 - 29.0 lb-ft]

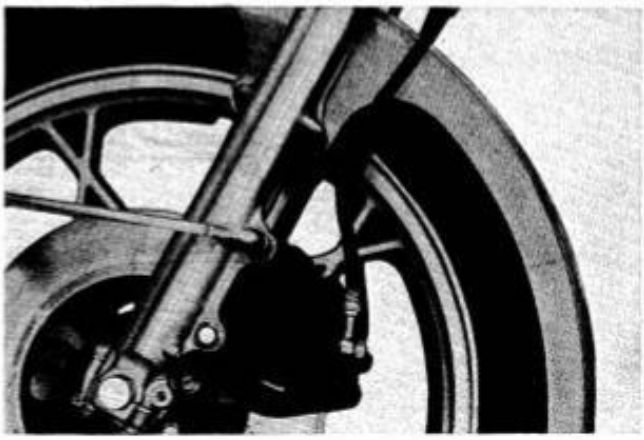

WIRE AND CABLE ROUTING

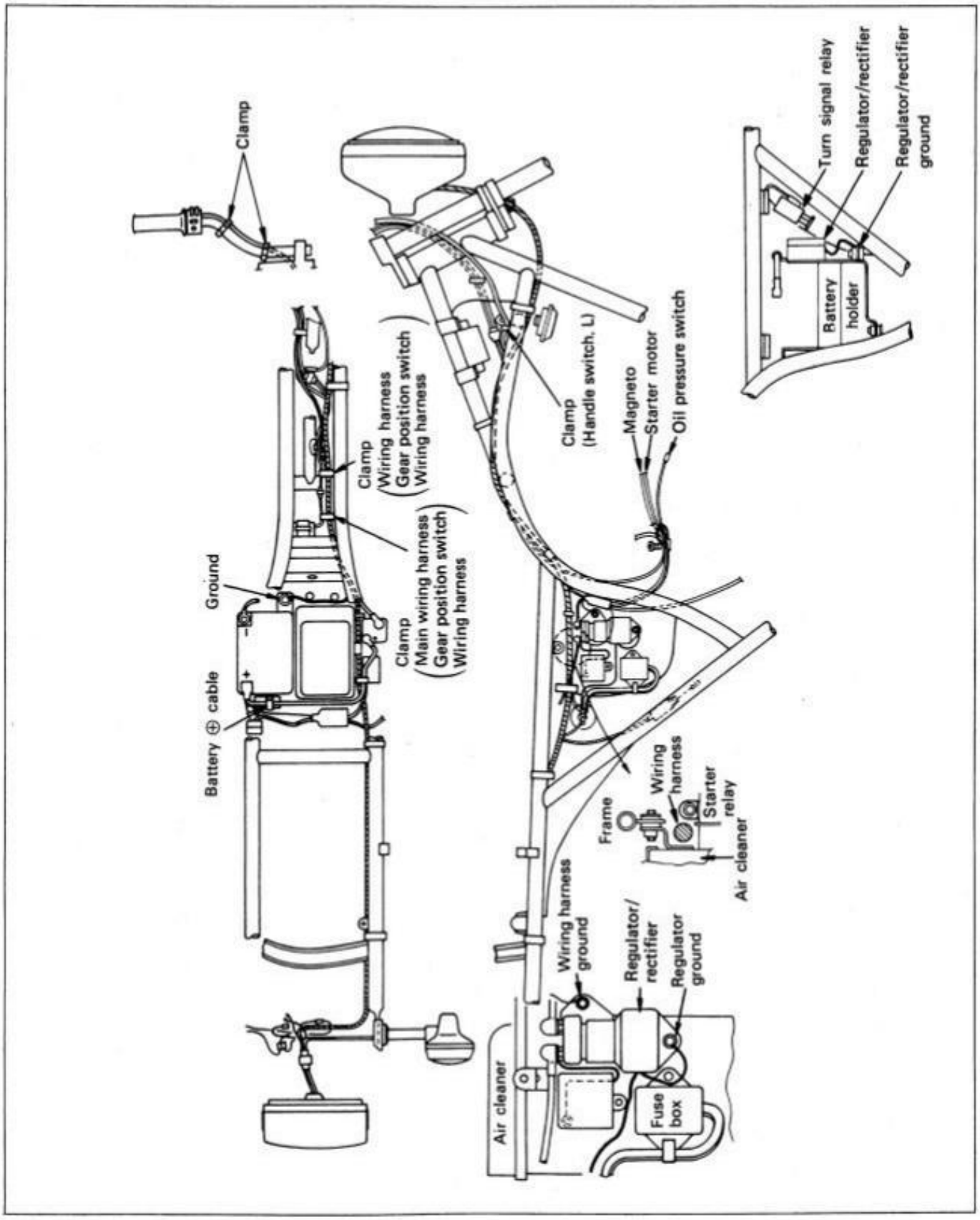

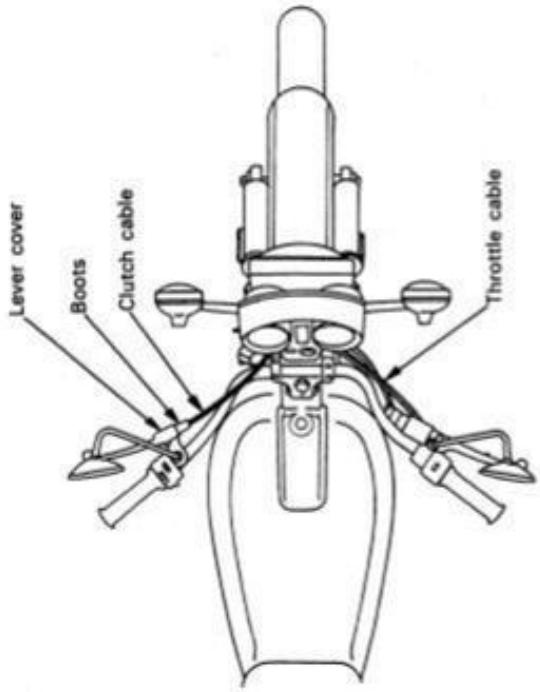
Lever cover
Boots
Clutch cable
Throttle cable

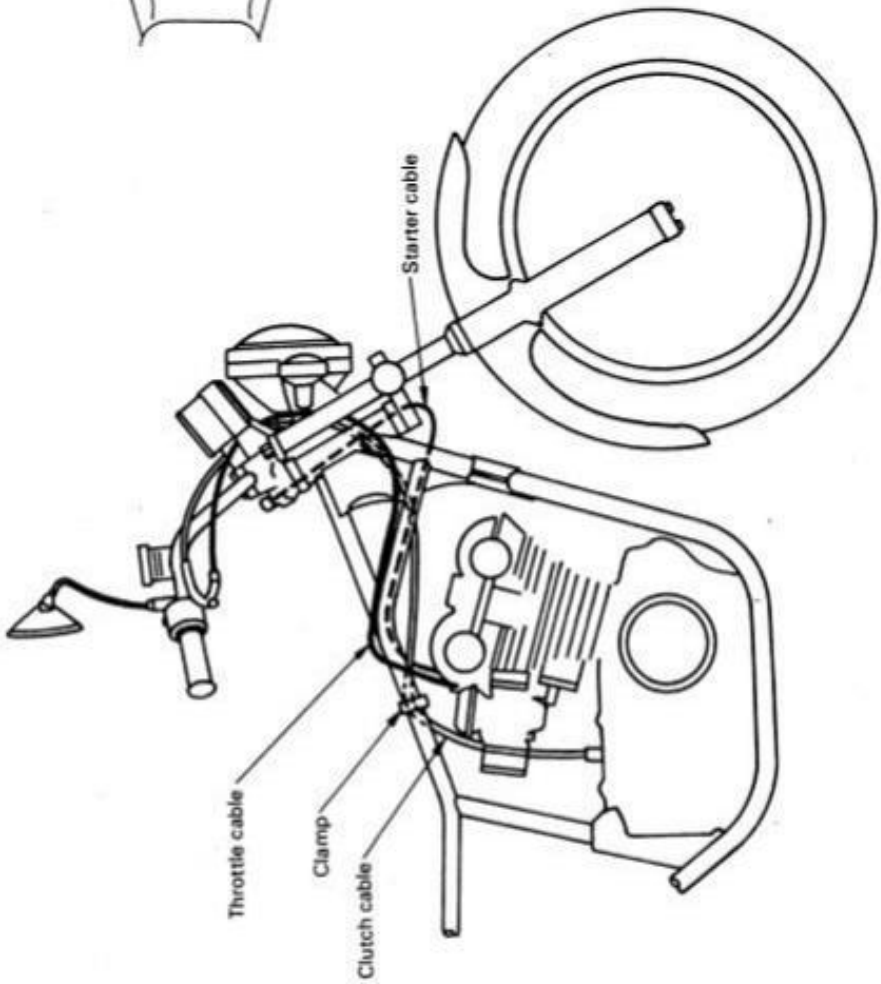
Starter cable
Throttle cable
Clamp
Clutch cable

WIRING DIAGRAM

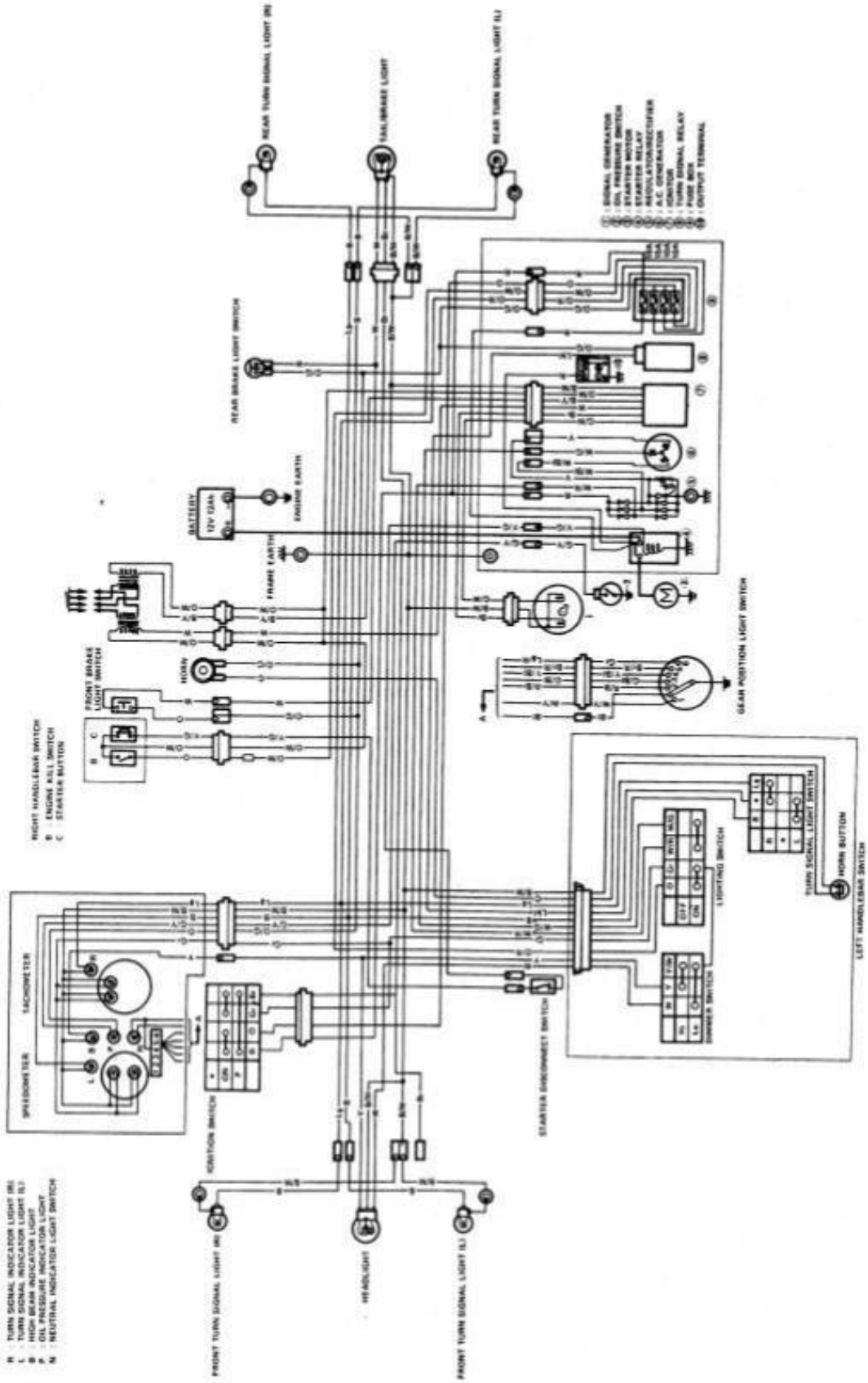

GS550LT

Right side

Left side

SPECIFICATIONS

DIMENSIONS AND DRY MASS

Overall length	2 190 mm (86.2 in)
Overall width	890 mm (35.0 in)
Overall height	1 215 mm (47.8 in)
Wheelbase	1 480 mm (58.3 in)
Ground clearance	160 mm (6.3 in)
Dry mass	205 kg (452 lbs)

ENGINE

Type	Four-stroke, air-cooled, DOHC
Number of cylinders	4
Bore	56.0 mm (2.205 in)
Stroke	55.8 mm (2.197 in)
Piston displacement	549 cm^3 (33.5 cu.in)
Compression ratio	8.6 : 1
Carburetor	MIKUNI BS32SS, four
Air cleaner	Polyurethane foam element
Starter system	Electric
Lubrication system	Wet sump

TRANSMISSION

Clutch		Wet multi-plate type
Transmission		6-speed constant mesh
Gearshift pattern		1-down 5-up
Primary reduction		1.977 (87/44)
Final reduction		3.400 (51/15)
Gear ratios,	Low	2.666 (32/12)
	2nd	1.777 (32/18)
	3rd	1.380 (29/21)
	4th	1.173 (27/23)
	5th	1.045 (23/22)
	Top	0.956 (22/23)

CHASSIS

Front suspension	Telescopic, oil dampened
Rear suspension	Swinging arm, oil dampened, spring 5-way adjustable
Steering angle	40° (right and left)
Caster	60° 00′
Trail	114 mm (4.49 in)
Turning radius	2.6 m (8.5 ft)
Front brake	Disc brake
Rear brake	Disc brake
Front tire size	3.25H19-4PR
Rear tire size	4.50H17-4PR
Front tire pressure	175 kPa (1.75 kg/cm², 25 psi) (Normal solo riding)
Rear tire pressure	200 kPa (2.00 kg/cm², 28 psi) (Normal solo riding)

ELECTRICAL

Ignition type	Transistorized
Ignition timing	15° B.T.D.C. below 1 500 r/min and 40° B.T.D.C. above 2 350 r/min
Spark plug	NGK B8ES or NIPPON DENSO W24ES-U
Spark plug gap	0.6 – 0.8 mm (0.024 – 0.031 in) both NGK and NIPPON DENSO
Battery	12V 43.2 kC (12Ah)/10HR
Generator	Three-phase A.C. generator
Fuse	10/10/10/15A

CAPACITIES

Fuel tank		13 L (3.4 US gal)
Engine oil	change	2.4 L (2.5 US qt)
	filter change	2.6 L (2.7 US qt)
	overhaul	2.7 L (2.8 US qt)
Front fork oil		217 ml (7.33 US oz) in each leg

* *Specifications subject to change without notice.*

SERVICE DATA

Please refer to the service data of GS550T except for the service data shown below.

TRANSMISSION

ITEM	STANDARD	LIMIT
Final reduction	3.400 (51/15)	—

WHEEL

ITEM	STANDARD		LIMIT
Tire size	Rear	4.50H17-4PR	—

SUSPENSION

Unit: mm (in)

ITEM	STANDARD		LIMIT
Front fork stroke	160 (6.30)		—
Front fork spring free length	Upper	—	153 (6.02)
	Lower	—	451 (17.76)
Front fork oil level	229 (9.02)		—

FUEL + OIL CAPACITY

ITEM	SPECIFICATION
Fuel tank	13 L (3.4 US gal)
Front fork oil capacity (each leg)	217 ml (7.33 US oz)

WATTAGE

Unit: W (CP)

ITEM		SPECIFICATION
Headlight	HI	60
	LO	55
Tail/Brake light		8/23 (3/32)
Turn signal light		23 (32)
Speedometer light		3.4
Tachometer light		3.4
Turn signal indicator light		3.4
High beam indicator light		3.4
Neutral indicator light		3.4
Oil pressure indicator light		3.4
Fuel meter light		3.4
Gear position indicator light		1.1

The GS550LT is now equipped with BS type carburetors which are identical to the GS550ET. Please refer to pages 344 thru 358.
The "L" version of the GS550ET is also equipped with tapered type steering stem bearings. Please refer to pages 365 thru 369.

FUEL COCK

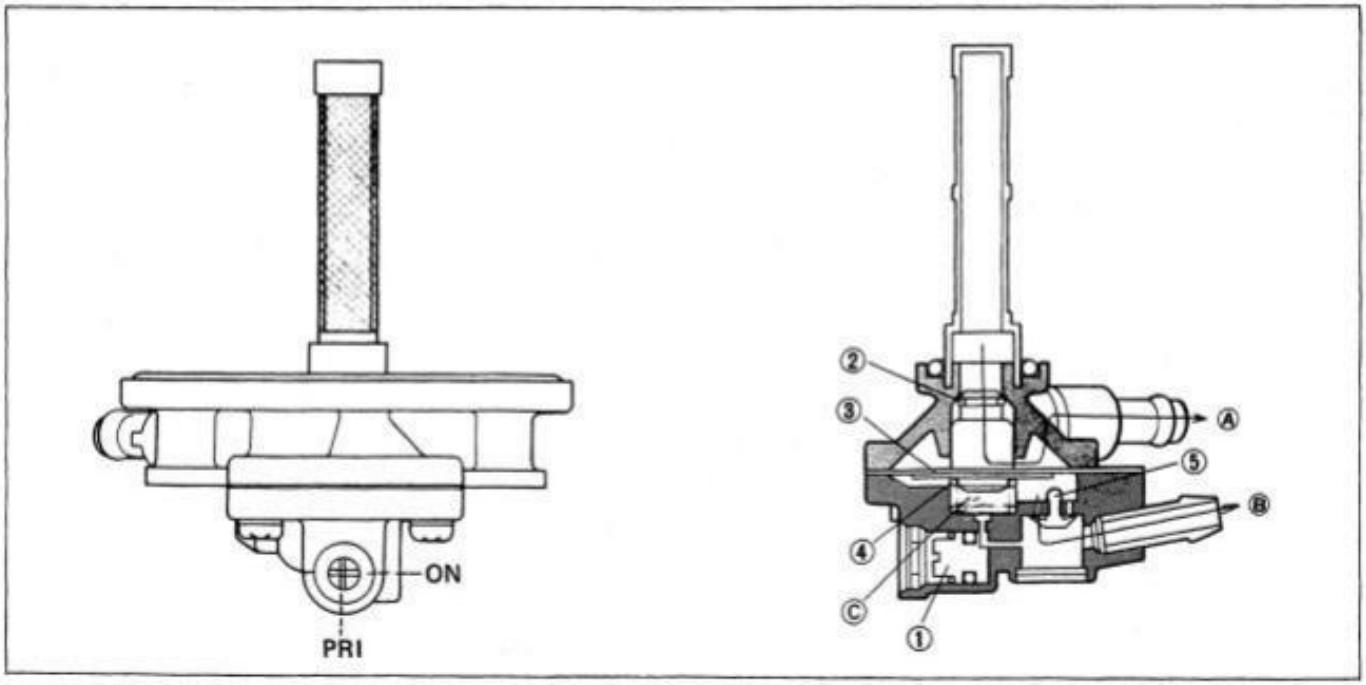

① Fuel valve ② O-ring ③ Diaphragm
④ Spring ⑤ One way valve
Ⓐ Fuel flow Ⓑ Vacuum

When the engine is not running with the valve in the ON position, the fuel valve is kept in the closed position by applying pressure utilizing a spring so that no fuel will flow to the carburetors. When the engine is engaged, a negative pressure is generated in the diaphragm chamber "Ⓒ" through the vacuum (negative pressure) pipe which is connected to the carburetors, and builds up a negative pressure which is higher than the spring pressure so that the diaphragm is forced to open the fuel valve and thus allow the fuel to flow to the carburetors.

On the other hand, setting the valve in the ON position keeps the air return orifice open. Negative pressure does not accumulate on the diaphragm at the time of engine stopping, and then the spring pressure actuates the diaphragm to move back to its original position and closes the fuel valve.

However, setting the valve in PRI position with a screwdriver causes the air return orifice to close, resulting in negative pressure in the chamber "Ⓒ" under the diaphragm. This negative pressure doesn't allow the fuel valve to close and therefore the fuel keeps flowing to the carburetors.

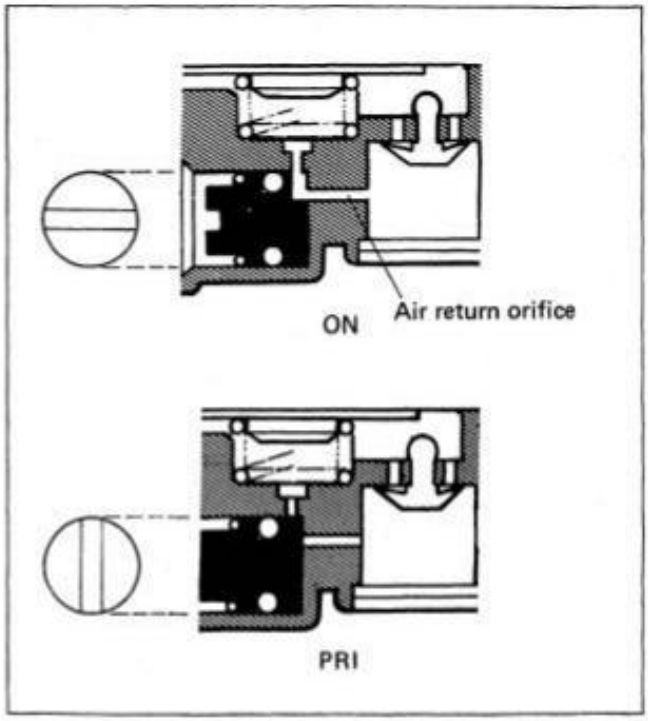

CAUTION: When starting the engine at PRI position, be sure to change the valve from PRI position to ON position immediately.

WIRE AND CABLE ROUTING

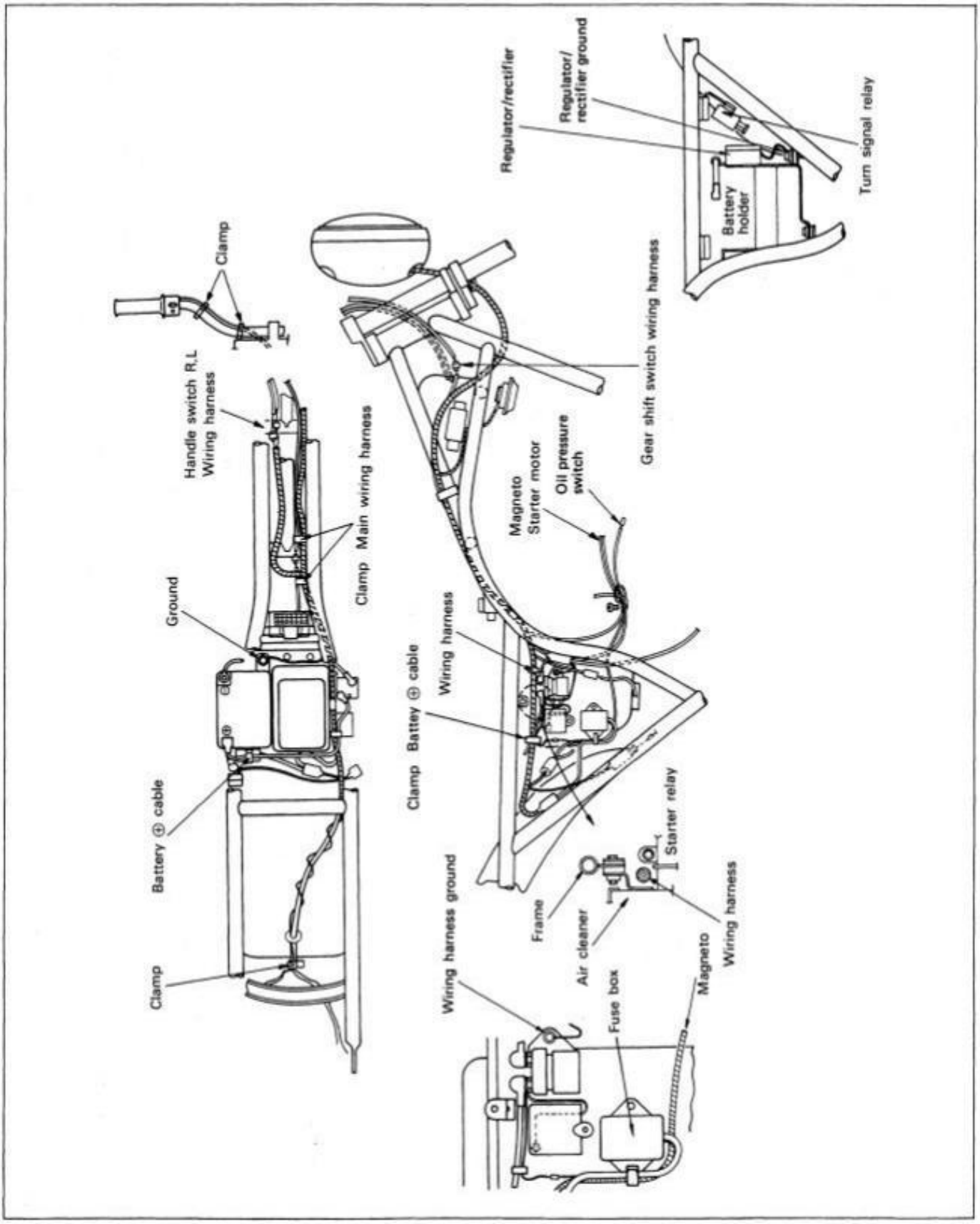

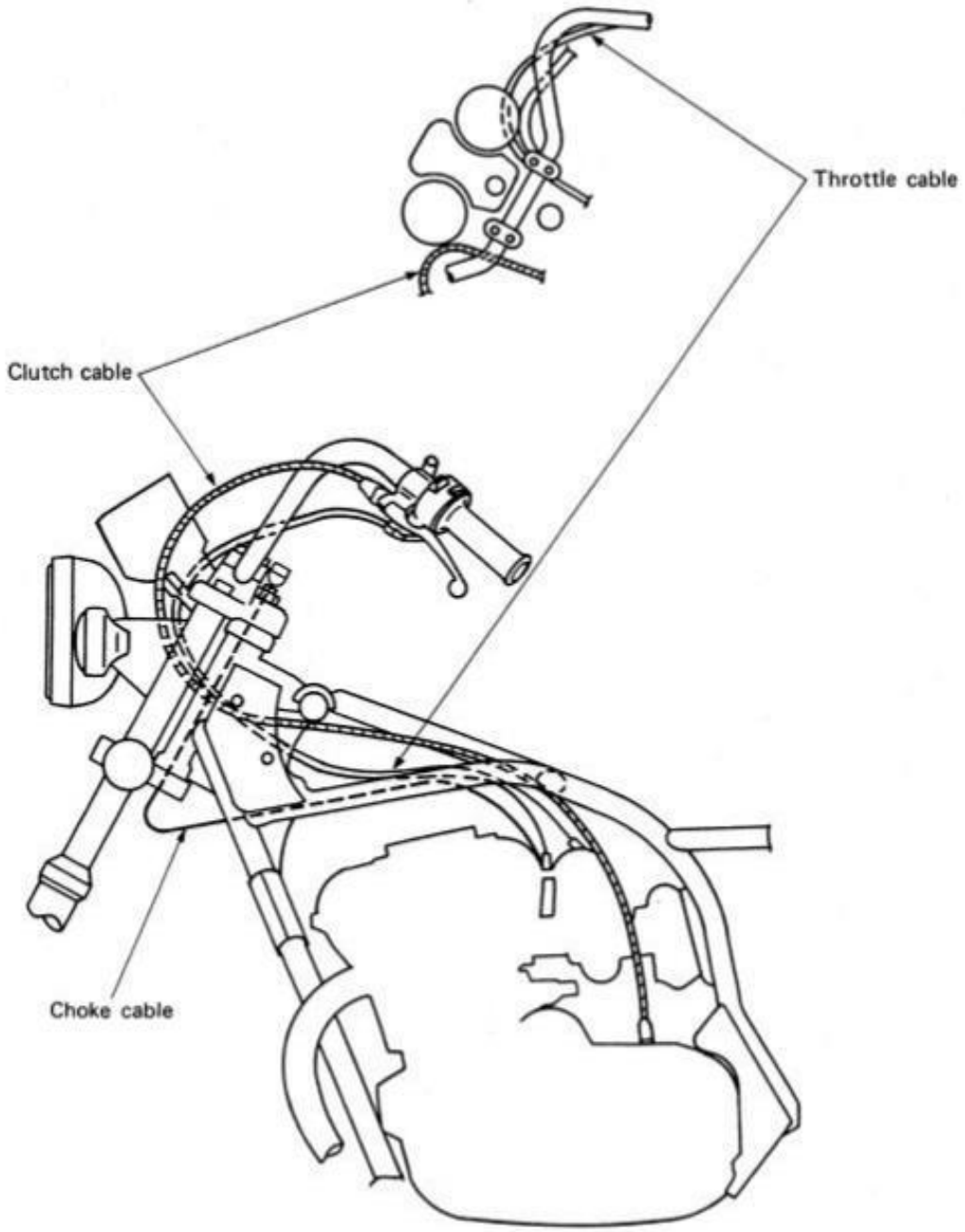
Throttle cable
Clutch cable
Choke cable

WIRING DIAGRAM

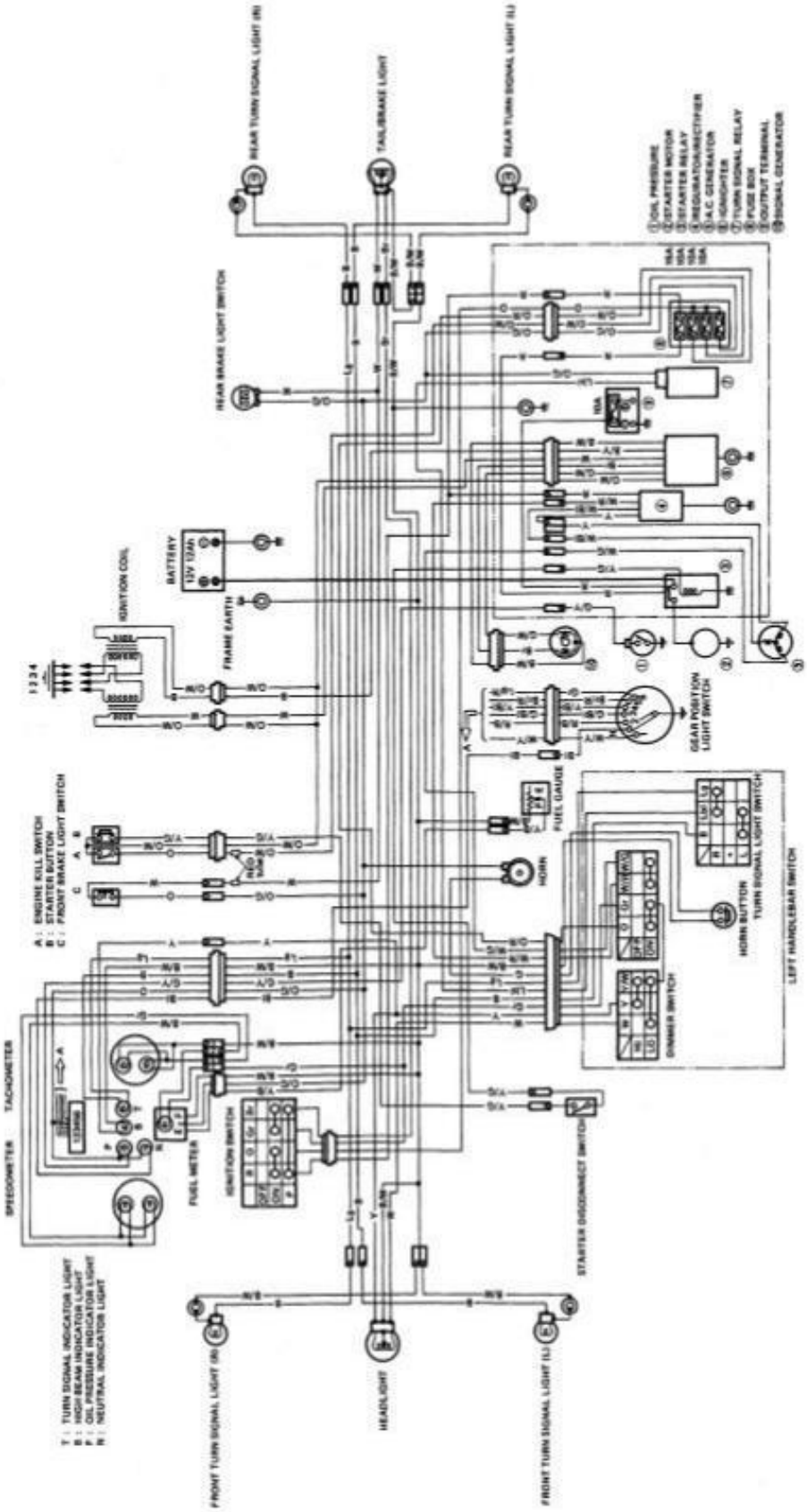

FOREWORD

The SUZUKI GS550-series and GS500-series are new 1981 models and incorporate many refinements and technical changes from the previous models. This section has been produced to aid SUZUKI mechanics in propery maintaining and reparing these motorcycles, which incorporate so many new and invovative changes. These technical improvements have further enhanced the comfort, handling and overall performance of these outstanding models.

This section covers four models of GS550 series; GS550E, GS550T, GS550L and GS550M, and three models of GS500 series; GS500, GS500L and GS500M.

This section has been written primarily for the experienced SUZUKI mechanics but will also be very useful even for the do-it-yourself mechanics.
Please refer to the entire GS550 Service Manual for all other areas of information not covered in this manual.

CONTENTS

MODEL IDENTIFICATION 394
SPECIFICATIONS 396
MODIFICATIONS 403
SERVICE DATA
- GS500X 405
- GS500LX 415
- GS500MX 425
- GS550X 435
- GS550LX 446
- GS550TX 457
- GS550MX 468

WIRING DIAGRAM 478
CABLE ROUTING 497
BRAKE HOSE ROUTING 499
WIRE HARNESS ROUTING 500

MODEL IDENTIFICATION

GS500 AND GS550

GS500M AND GS550M

GS550T

GS500L AND GS550L

SPECIFICATIONS

GS500E

DIMENSIONS AND DRY MASS

Overall length	2 195 mm
Overall width	755 mm
Overall height	1 120 mm
Wheelbase	1 435 mm
Ground clearance	165 mm
Dry mass	201 kg

ENGINE

Type	Four-stroke, air-cooled, DOHC
Number of cylinder	4
Bore	53.0 mm
Stroke	55.8 mm
Piston displacement	492 cm^3
Compression ratio	8.6 : 1
Carburetor	MIKUNI BS32SS, four
Air cleaner	Polyurethane foam element
Starter system	Electric
Lubrication system	Wet sump

TRANSMISSION

Clutch	Wet multi-plate type
Transmission	6-speed constant mesh
Gearshift pattern	1-down, 5-up
Primary reduction	1.977 (87/44)
Final reduction	3.500 (49/14)
Gear ratios, Low	2.666 (32/12)
2nd	1.777 (32/18)
3rd	1.380 (29/21)
4th	1.173 (27/23)
5th	1.045 (23/22)
Top	0.956 (22/23)
Drive chain	DAIDO D.I.D. 50HDL or TAKASAGO RK50SHO, 110 links

CHASSIS

Front suspension	Telescopic, oil dampened
Rear suspension	Swinging arm, spring 5-way adjustable
Steering angle	40° (right & left)
Caster	61°40′
Trail	116 mm
Turning radius	2.5 m
Front brake	Disc brake, twin
Rear brake	Disc brake
Front tire size	3.25H19 4PR
Rear tire size	3.75H18 4PR 4.00H18 4PR..Only for E-22
Front fork stroke	150 mm
Rear wheel travel	100 mm

ELECTRICAL

Ignition type	Transistorized
Ignition timing	15° B.T.D.C. below 1 500 r/min and 40° B.T.D.C. above 2 350 r/min.
Spark plug	NGK DR8ES-L or NIPPON DENSO X24ESR-U
Battery	12V 43.2kC (12Ah)/10HR
Generator	Three phase A.C. generator
Fuse	10/10/10/15A

CAPACITIES

Fuel tank including reserve	16L
reserve	4.0L
Engine oil	2.4L
Front fork oil	204 ml

GS500L

DIMENSIONS AND DRY MASS

Overall length	2 210 mm
Overall width	820 mm
Overall height	1 165 mm
Wheelbase	1 445 mm
Ground clearance	170 mm
Dry mass	205 kg

ENG'NE

Type	Four-stroke, air-cooled, DOHC
Number of cylinder	4
Bore	53.0 mm
Stroke	55.8 mm
Piston displacement	492 cm^3
Compression ratio	8.6 : 1
Carburetor	MIKUNI BS32SS, four
Air cleaner	Polyurethane foam element
Starter system	Electric
Lubrication system	Wet sump

TRANSMISSION

Clutch	Wet multi-plate type
Transmission	6-speed constant mesh
Gearshift pattern	1-down, 5-up
Primary reduction	1.977 (87/44)
Final reduction	3.500 (49/14)
Gear ratios, Low	2.666 (32/12)
2nd	1.777 (32/18)
3rd	1.380 (29/21)
4th	1.173 (27/23)
5th	1.045 (23/22)
Top	0.956 (22/23)
Drive chain	DAIDO D.I.D. 50HDL or TAKASAGO RK50SHO, 110 links

CHASSIS

Front suspension	Telescopic, oil dampened
Rear suspension	Swinging arm, spring 5-way adjustable
Steering angle	40° (right & left)
Caster	61°00'
Trail	122 mm
Turning radius	2.5 m
Front brake	Disc brake, twin
Rear brake	Disc brake
Front tire size	3.25H19 4PR
Rear tire size	4.50H18 4PR
Front fork stroke	160 mm
Rear wheel travel	100 mm

ELECTRICAL

Ignition type	Transistorized
Ignition timing	15° B.T.D.C. below 1 500 r/min and 40° B.T.D.C. above 2 350 r/min.
Spark plug	NGK DR8ES-L or NIPPON DENSO X24ESR-U
Battery	12V 43.2kC (12Ah)/10HR
Generator	Three-phase A.C. generator
Fuse	10/10/10/15A

CAPACITIES

Fuel tank including reserve	12.5L
reserve	4.0L
Engine oil	2.4L
Front fork oil	196 ml

GS500M

DIMENSIONS AND DRY MASS

Overall length	2 145 mm
Overall width	730 mm
Overall height	1 110 mm
Wheelbase	1 455 mm
Ground clearance	160 mm
Dry mass	205 kg

ENGINE

Type	Four-stroke cycle, air-cooled, DOHC
Number of cylinders	4
Bore	53.0 mm
Stroke	55.8 mm
Piston displacement	492 cm^3
Compression ratio	8.6 : 1
Carburetor	MIKUNI BS32SS, four
Air cleaner	Polyurethane foam element
Starter system	Electric
Lubrication system	Wet sump

TRANSMISSION

Clutch	Wet multi-plate type
Transmission	6-speed constant mesh
Gearshift pattern	1-down, 5-up
Primary reduction	1.977 (87/44)
Final reduction	3.500 (49/14)
Gear ratios, Low	2.666 (32/12)
2nd	1.777 (32/18)
3rd	1.380 (29/21)
4th	1.173 (27/23)
5th	1.045 (23/22)
Top	0.956 (22/23)
Drive chain	DAIDO D.I.D. 50HDL or TAKASAGO RK50SHO, 110 links

CHASSIS

Front suspension	Telescopic, oil dampened
Rear suspension	Swinging arm, automatic dual damping, spring 5-way adjustable
Steering angle	40° (right & left)
Caster	61°50′
Trail	115 mm
Turning radius	2.5 m
Front brake	Disc brake, double
Rear brake	Disc brake
Front tire size	3.25H19 4PR
Rear tire size	3.75H18 4PR 4.00H18 4PR..Only for E-39

ELECTRICAL

Ignition type	Transistorized
Ignition timing	15° B.T.D.C. below 1 500 r/min and 40° B.T.D.C. above 2 350 r/min
Spark plug	NGK DR8ES-L or NIPPON DENSO X24ESR-U
Battery	12V 43.2kC (12Ah)/10HR
Generator	Three-phase A.C. generator
Fuse	10/10/10/15A

CAPACITIES

Fuel tank including reserve	23L
reserve	4.0L
Engine oil	2.4L
Front fork oil	195 ml

GS550 AND GS550E

DIMENSIONS AND DRY MASS

Overall length	2 150 mm
Overall width	850 mm
Overall height	1 150 mm
Wheelbase	1 440 mm
Ground clearance	150 mm
Seat height	780 mm
Dry mass	203 kg

ENGINE

Type	Four-stroke, air-cooled, DOHC
Number of cylinders	4
Bore	56.0 mm
Stroke	55.8 mm
Piston displacement	549 cm^3
Compression ratio	8.6 : 1
Carburetor	MIKUNI BS32SS, four
Air cleaner	Polyurethane foam element
Starter system	Electric
Lubrication system	Wet sump

TRANSMISSION

Clutch	Wet multi-plate type
Transmission	6-speed constant mesh
Gearshift pattern	1-down, 5-up
Primary reduction	1.977 (87/44)
Final reduction	3.333 (50/15)
Gear ratios, Low	2.666 (32/12)
2nd	1.777 (32/18)
3rd	1.380 (29/21)
4th	1.173 (27/23)
5th	1.045 (23/22)
Top	0.956 (22/23)
Drive chain	DAIDO D.I.D. 50HDL or TAKASAGO RK50SHO, 110 links

CHASSIS

Front suspension	Telescopic, oil dampened
Rear suspension	Swinging arm, oil dampened, spring 5-way adjustable
Steering angle	40° (right & left)
Caster	61°30′
Trail	116 mm
Turning radius	2.5 m
Front brake	Disc brake, twin
Rear brake	Internal expanding...GS550 Disc brake...GS550E
Front tire size	3.25H19 4PR
Rear tire size	3.75H18 4PR 4.00H18 4PR..Only for E-22
Front fork stroke	150 mm (5.91 in)
Rear wheel travel	100 mm (3.94 in)

ELECTRICAL

Ignition type	Transistorized
Ignition timing	15° B.T.D.C. below 1 500 r/min and 40° B.T.D.C. above 2 350 r/min
Spark plug	NGK B8ES or NIPPON DENSO W24ES-U
Battery	12V 43.2kC (12Ah)/10HR
Generator	Three-phase A.C. generator
Fuse	10/10/10/15A

CAPACITIES

Fuel tank including reserve	16L
reserve	4.0L
Engine oil	2.4L
Front fork oil	204 ml

GS550T

DIMENSIONS AND DRY MASS

Overall length	2 200 mm
Overall width	850 mm
Overall height	1 180 mm
Wheelbase	1 435 mm
Ground clearance	150 mm
Seat height	780 mm
Dry mass	200 kg

ENGINE

Type	Four-stroke, air-cooled, DOHC
Number of cylinders	4
Bore	56.0 mm
Stroke	55.8 mm
Piston displacement	549 cm^3
Compression ratio	8.6 : 1
Carburetor	MIKUNI BS32SS, four
Air cleaner	Polyurethane foam element
Starter system	Electric
Lubrication system	Wet sump

TRANSMISSION

Clutch	Wet multi-plate type
Transmission	6-speed constant mesh
Gearshift pattern	1-down, 5-up
Primary reduction	1.977 (87/44)
Final reduction	3.333 (50/15)
Gear ratios, Low	2.666 (32/12)
2nd	1.777 (32/18)
3rd	1.380 (29/21)
4th	1.173 (27/23)
5th	1.045 (23/22)
Top	0.956 (22/23)
Drive chain	DAIDO D.I.D. 50HDL or TAKASAGO RK50SHO, 110 links

CHASSIS

Front suspension	Telescopic, oil dampened
Rear suspension	Swinging arm, automatic dual damping, spring 5-way adjustable
Steering angle	40° (right & left)
Caster	61°30′
Trail	116 mm
Turning radius	2.5 m
Front brake	Disc brake
Rear brake	Disc brake
Front tire size	3.25H19 4PR
Rear tire size	4.25H17 4PR
Front fork stroke	150 mm
Rear wheel travel	100 mm

ELECTRICAL

Ignition type	Transistorized
Ignition timing	15° B.T.D.C. below 1 500 r/min and 40° B.T.D.C. above 2 350 r/min.
Spark plug	NGK B8ES or NIPPON DENSO W24ES-U
Battery	12V 43.2kC (12Ah)/10HR
Generator	Three-phase A.C. generator
Fuse	10/10/10/15A

CAPACITIES

Fuel tank including reserve	12L
reserve	4.0L
Engine oil	2.4L
Front fork oil	190 ml

GS550L

DIMENSIONS AND DRY MASS

Overall length	2 185 mm
Overall width	870 mm
Overall height	1 200 mm
Wheelbase	1 455 mm
Ground clearance	160 mm
Seat height	800 mm
Dry mass	202 kg

ENGINE

Type	Four-stroke, air-cooled, DOHC
Number of cylinders	4
Bore	56.0 mm
Stroke	55.8 mm
Piston displacement	549 cm^3
Compression ratio	8.6 : 1
Carburetor	MIKUNI BS32SS, four
Air cleaner	Polyurethane foam element
Starter system	Electric
Lubrication system	Wet sump

TRANSMISSION

Clutch	Wet multi-plate type
Transmission	6-speed constant mesh
Gearshift pattern	1-down, 5-up
Primary reduction	1.977 (87/44)
Final reduction	3.400 (51/15)
Gear ratios, Low	2.666 (32/12)
2nd	1.777 (32/18)
3rd	1.380 (29/21)
4th	1.173 (27/23)
5th	1.045 (23/22)
Top	0.956 (22/23)
Drive chain	DAIDO D.I.D. 50HDL or TAKASAGO RK50SHO, 110 links

CHASSIS

Front suspension	Telescopic, oil dampened
Rear suspension	Swinging arm, oil dampened, spring 5-way adjustable
Steering angle	40° (right & left)
Caster	61°00′
Trail	122 mm
Turning radius	2.5 m
Front brake	Disc brake, twin
Rear brake	Internal expanding
Front tire size	3.25H19 4PR
Rear tire size	4.50H17 4PR
Front fork stroke	160 mm
Rear wheel travel	100 mm

ELECTRICAL

Ignition type	Transistorized
Ignition timing	15° B.T.D.C. below 1 500 r/min and 40° B.T.D.C. above 2 350 r/min
Spark plug	NGK B8ES or NIPPON DENSO W24ES-U
Battery	12V 43.2kC (12Ah)/10HR
Generator	Three-phase A.C. generator
Fuse	10/10/10/15A

CAPACITIES

Fuel tank including reserve	12L
reserve	4.0L
Engine oil	2.4L
Front fork oil	196 ml

GS550M

DIMENSIONS AND DRY MASS

Overall length	2 145 mm
Overall width	730 mm
Overall height	1 110 mm
Wheelbase	1 455 mm
Ground clearance	160 mm
Seat height	780 mm
Dry mass	205 kg

ENGINE

Type	Four-stroke, air-cooled, DOHC
Number of cylinders	4
Bore	56.0 mm
Stroke	55.8 mm
Piston displacement	549 cm^3
Compression ratio	8.6 : 1
Carburetor	MIKUNI BS32SS, four
Air cleaner	Polyurethane foam element
Starter system	Electric
Lubrication system	Wet sump

TRANSMISSION

Clutch	Wet multi-plate type
Transmission	6-speed constant mesh
Gearshift pattern	1-down, 5-up
Primary reduction	1.977 (87/44)
Final reduction	3.333 (50/15)
Gear ratios, Low	2.666 (32/12)
2nd	1.777 (32/18)
3rd	1.380 (29/21)
4th	1.173 (27/23)
5th	1.045 (23/22)
Top	0.956 (22/23)
Drive chain	DAIDO D.I.D. 50HDL or TAKASAGO RK50SHO, 112 links

CHASSIS

Front suspension	Telescopic, oil dampened, spring 2-way adjustable
Rear suspension	Swinging arm, oil dampened, damper 4-way/spring 5-way adjustable
Steering angle	40° (right & left)
Caster	61°50′
Trail	115 mm
Turning radius	2.5 m
Front brake	Disc brake, twin
Rear brake	Disc brake
Front tire size	3.25H19 4PR
Rear tire size	3.75H18 4PR 4.00H18 4PR..Only for E-22
Front fork stroke	150 mm
Rear wheel travel	105 mm

ELECTRICAL

Ignition type	Transistorized
Ignition timing	15° B.T.D.C. below 1 500 r/min and 40° B.T.D.C. above 2 350 r/min
Spark plug	NGK B8ES or NIPPON DENSO W24ES-U
Battery	12V 43.2kC (12Ah)/10HR
Generator	Three-phase A.C. generator
Fuse	10/10/10/15A

CAPACITIES

Fuel tank including reserve	23L
reserve	4.0L
Engine oil	2.4L
Front fork oil	195 ml

MODIFICATIONS

CAMSHAFT, SPROCKET AND BOLT

As the illustrated, the sprocket tightening bolt and method has been changed from Ⓐ to Ⓑ, to Ⓒ. Therefore, tightening torque should be observed.

Type Ⓐ

Part Name	Tightening torque
6 mm Allen bolt + Thread lock super "1303B"	8 – 12 N·m 0.8 – 1.2 kg·m 6.0 – 8.5 lb·ft

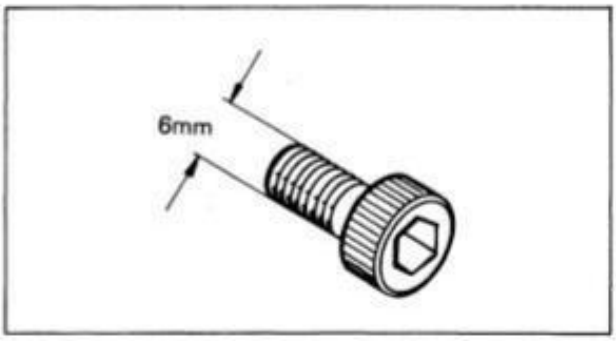

Type Ⓑ

Part Name	Tightening torque
6 mm bolt + Lock washer + Thread lock super "1303B"	15 – 20 N·m 1.5 – 2.0 kg·m 11.0 – 14.5 lb·ft

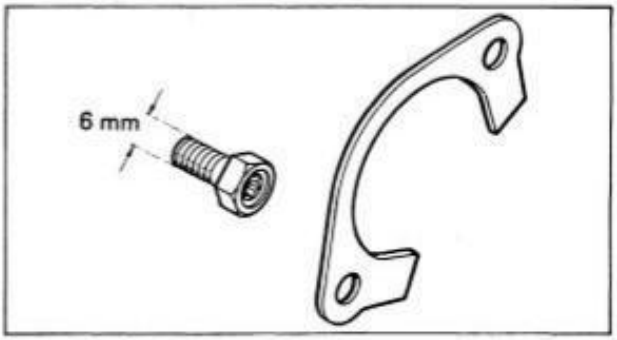

Type Ⓒ

Part Name	Tightening torque
7 mm flange bolt + Thread lock super "1303B"	24 – 26 N·m 2.4 – 2.6 kg·m 17.5 – 19.0 lb·ft

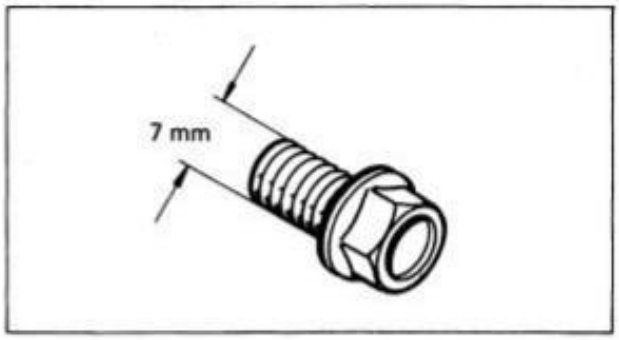

Part Name	Type Ⓐ Part Number	Type Ⓑ Part Number	Type Ⓒ Part Number
Bolt	09106-06024	09111-06033	09103-07001
Lock washer	–	12747-44000	–
IN, Cam sprocket	12741-47001	←	12741-47002
IN, Camshaft	12711-47000	←	12711-47001
EX, Cam sprocket	12751-47010	←	12751-47011
EX, Camshaft	12721-47010	←	12721-47011

NOTE:

Both Ⓐ type and Ⓑ type have an interchangeability by exchanging bolt for lock washer + bolt. However Ⓒ type has screw thread diameter of 7 mm, and bore diameters of the sprocket and the camshaft are also 7 mm, so there is no interchangeability with neither Ⓐ type nor Ⓑ type.

STEERING STEM

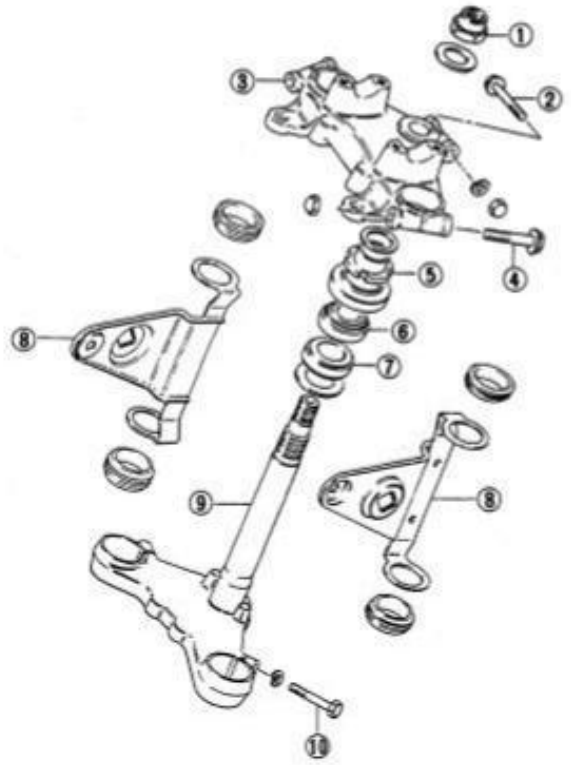

① Steering stem head nut
② Steering stem clamp bolt
③ Steering stem upper bracket
④ Front fork upper clamp bolt
⑤ Steering stem nut
⑥ Upper bearing
⑦ Lower bearing
⑧ Headlight bracket
⑨ Steering stem lower bracket
⑩ Front fork lower clamp bolt

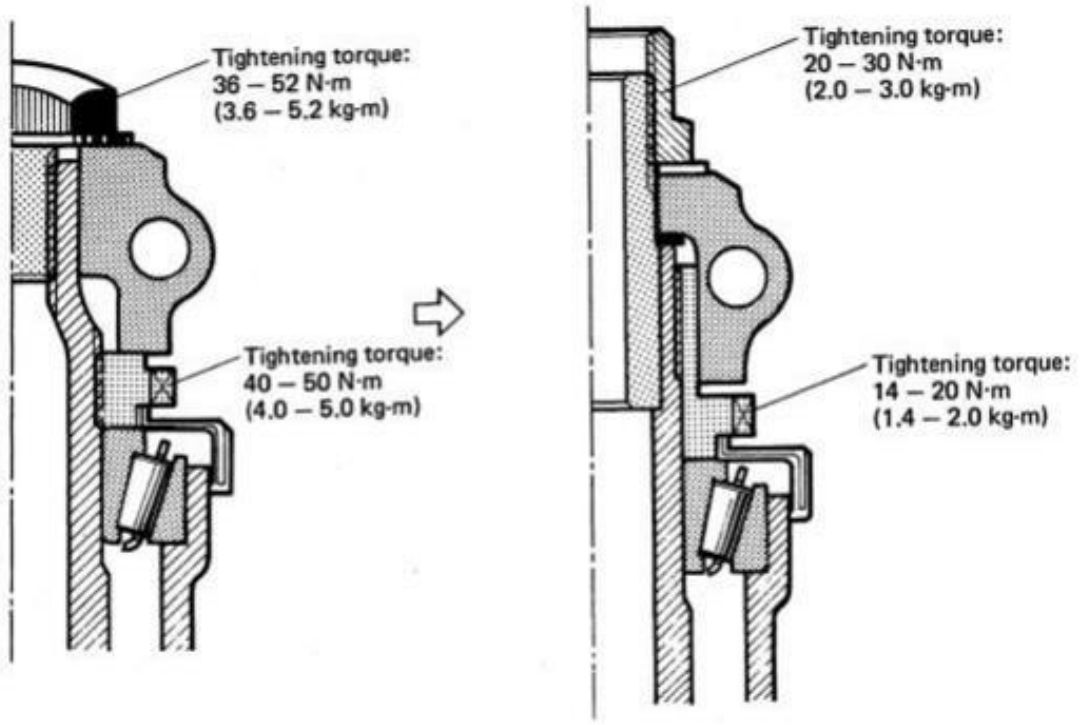

SERVICE DATA
GS500

VALVE + GUIDE

Model: GS500
Unit: mm (in)

ITEM		STANDARD	LIMIT
Valve diam.	IN.	30.0 (1.18)	———
	EX.	25.0 (0.98)	———
Valve lift	IN.	7.2 (0.283)	———
	EX.	7.0 (0.276)	———
Tappet clearance (when cold)	IN. & EX.	0.03 – 0.08	———
Valve guide to valve stem clearance	IN.	0.025 – 0.055 (0.0010 – 0.0022)	0.35 (0.014)
	EX.	0.040 – 0.070 (0.0016 – 0.0028)	0.35 (0.014)
Valve guide I.D.	IN. & EX.	7.000 – 7.015 (0.2756 – 0.2762)	———
Valve stem O.D.	IN.	6.960 – 6.975 (0.2740 – 0.2746)	———
	EX.	6.945 – 6.960 (0.2734 – 0.2740)	———
Valve stem runout	IN. & EX.	———	0.05 (0.002)
Valve head thickness	IN. & EX.	———	0.5 (0.02)
Valve stem end length	IN. & EX.	———	4.0 (0.16)
Valve seat width	IN. & EX.	0.9 – 1.1 (0.035 – 0.043)	———
Valve head radial runout	IN. & EX.	———	0.03 (0.001)
Valve spring free length (IN. & EX.)	INNER	———	35.5 (1.40)
	OUTER	———	41.5 (1.63)
Valve spring tension (IN. & EX.)	INNER	10.6 – 12.8 kg (23.4 – 28.2 lbs) at length 31 mm (1.2 in)	———
	OUTER	22.4 – 26.2 kg (49.4 – 57.8 lbs) at length 35 mm (1.4 in)	———

CAMSHAFT + CYLINDER HEAD

Unit: mm (in)

ITEM	STANDARD		LIMIT
Cam height	IN.	35.485 – 35.515 (1.3970 – 1.3982)	35.190 (1.3854)
	EX.	35.285 – 35.315 (1.3892 – 1.3904)	34.990 (1.3776)
Camshaft journal oil clearance	IN. & EX.	0.032 – 0.066 (0.0013 – 0.0026)	0.150 (0.0059)
Camshaft journal holder I.D.	IN. & EX.	22.012 – 22.025 (0.8666 – 0.8671)	———
Camshaft journal O.D.	IN. & EX.	21.959 – 21.980 (0.8645 – 0.8654)	———
Camshaft runout	IN. & EX.	———	0.10 (0.004)
Cam chain 20 pitch length		———	157.80 (6.213)
Cam chain pin (at arrow "3")		20 th pin	———
Cylinder head distortion		———	0.2 (0.008)

CYLINDER + PISTON + PISTON RING

Unit: mm (in)

ITEM	STANDARD	LIMIT
Compression pressure	9 – 13 kg/cm² (128 – 185 psi)	7.0 kg/cm² (100 psi)
Compression pressure difference	———	2.0 kg/cm² (28 psi)
Piston to cylinder clearance	0.050 – 0.060 (0.0020 – 0.0024)	0.120 (0.0047)
Cylinder bore	53.000 – 53.015 (2.0866 – 2.0872)	53.080 (2.0898)
Piston diam.	52.945 – 52.960 (2.0844 – 2.0850) Measure at the 15 (0.59) from skirt end.	52.880 (2.0819)
Cylinder distortion	———	0.20 (0.008)

Unit: mm (in)

ITEM	STANDARD			LIMIT
Piston ring free end gap	1st	T	Approx. 5.0 (0.20)	4.0 (0.16)
	2nd	T	Approx. 8.5 (0.33)	6.8 (0.27)
Piston ring end gap	1st		0.10 – 0.30 (0.004 – 0.012)	0.70 (0.028)
	2nd		0.10 – 0.25 (0.004 – 0.010)	0.70 (0.028)
Piston ring to groove clearance	1st		———	0.180 (0.0071)
	2nd		———	0.150 (0.0059)
Piston ring groove width	1st		1.21 – 1.23 (0.0476 – 0.0484)	———
	2nd		1.21 – 1.23 (0.0476 – 0.0484)	———
	Oil		2.51 – 2.53 (0.0988 – 0.0996)	———
Piston ring thickness	1st		1.175 – 1.190 (0.0463 – 0.0469)	———
	2nd		1.170 – 1.190 (0.0461 – 0.0469)	———
Piston pin bore	16.002 – 16.008 (0.6300 – 0.6302)			16.030 (0.6311)
Piston pin O.D.	15.995 – 16.000 (0.6297 – 0.6300)			15.980 (0.6291)

CONROD + CRANKSHAFT

Unit: mm (in)

ITEM	STANDARD	LIMIT
Conrod small end I.D.	16.006 – 16.014 (0.6302 – 0.6305)	16.040 (0.6315)
Conrod deflection	———	3.0 (0.12)
Conrod big end side clearance	0.10 – 0.65 (0.004 – 0.026)	1.0 (0.039)
Crankshaft runout	———	0.10 (0.004)

OIL PUMP

ITEM	STANDARD	LIMIT
Oil pump reduction ratio	1.821 (87 / 44 x 35 / 38)	———
Oil pressure (at 60°C, 140°F)	Above 0.1 kg/cm² (1.42 psi) Below 0.3 kg/cm² (4.27 psi) at 3000 r/min.	———

CLUTCH

Unit: mm (in)

ITEM	STANDARD	LIMIT
Clutch cable play	2 – 3 (0.08 – 0.12)	———
Clutch release screw	¼ – ½ Turn back	———
Drive plate thickness	2.9 – 3.1 (0.114 – 0.122)	2.6 (0.10)
Drive plate claw width	11.8 – 12.0 (0.465 – 0.472)	11.0 (0.43)
Driven plate thickness	1.6 ± 0.06 (0.063 ± 0.002)	———
Driven plate distortion	———	0.1 (0.004)
Clutch spring free length	———	36.5 (1.44)

TRANSMISSION + DRIVE CHAIN

Unit: mm (in)

ITEM	STANDARD		LIMIT
Primary reduction ratio	1.977 (87 / 44)		———
Final reduction ratio	3.500 (49 / 14)		———
Gear ratios	Low	2.666 (32 / 12)	———
	2nd	1.777 (32 / 18)	———
	3rd	1.380 (29 / 21)	———
	4th	1.173 (27 / 23)	———
	5th	1.045 (23 / 22)	———
	Top	0.956 (22 / 23)	———
Shift fork to groove clearance	0.1 – 0.3 (0.004 – 0.012)		0.5 (0.020)
Shift fork groove width	5.5 – 5.6 (0.217 – 0.220)		———
Shift fork thickness	5.3 – 5.4 (0.195 – 0.199)		———
Drive chain	Type	D.I.D.: 50 HDL TAKASAGO: RK50SHO	———
	Links	108	———
	20 pitch length	———	320.0 (12.60)
Drive chain slack	20 – 30 (0.8 – 1.2)		———

CARBURETOR

Unit: mm (in)

ITEM	SPECIFICATION
Carburetor type	MIKUNI BS32SS, Four
Bore size	32
I. D. No.	47150
Idle r/min.	1150 ± 50 r/min.
Fuel level	5.0 ± 1.0 (0.20 ± 0.04)
Float height	22.4 ± 1.0 (0.88 ± 0.04)
Main jet (M. J.)	#97.5
Main air jet (M. A. J.)	1.6
Jet needle (J. N.)	5F42 – 3rd
Needle jet (N. J.)	X – 6
Throttle valve	# 135
Pilot jet (P. J.)	#40
By pass (B. P.)	1.0, 0.8, 0.8
Pilot outlet (P. O.)	0.7
Valve seat (V. S.)	2.0
Starter jet (G. S.)	#35, 0.5
Pilot screw (P. S.)	PRE–SET
Pilot air jet (P. A. J.)	#120
Throttle cable play	0.5 – 1.0 (0.02 – 0.04)
Choke cable play	0.5 – 1.0 (0.02 – 0.04)

ELECTRICAL

Unit: mm (in)

ITEM	SPECIFICATION		
Ignition timing	15° B.T.D.C. Below 1500 ± 100 r/min and 40° B.T.D.C. Above 2350 ± 100 r/min.		
Firing order	1. 2. 4. 3		
Spark plug	Type	NGK DR8ES–L or N.D. X24ESR–U	
	Gap	0.6 – 0.7 (0.024 – 0.028)	
Spark performance	Over 8 (0.3) at 1 atm		
Signal coil resistance	Approx. 60 – 80 Ω		
Ignition coil resistance	Primary	O/W – W or B/Y Approx. 3 – 5 Ω	
	Secondary	Plug cap – Plug cap Approx. 30 – 35 kΩ	
Generator no-load voltage	More than 80 V (AC) at 5000 r/min.		
Regulated voltage	14.0 – 14.5 V at 5000 r/min.		
Starter motor	Brush length	N. D.	6 Limit: (0.24)
	Commutator under cut		0.2 Limit: (0.008)
Starter relay resistance	Approx. 3 – 4 Ω		
Battery	Type designation	YB10L–A2	
	Capacity	12V 43.2kC (12Ah)/10HR	
	Standard electrolyte S. G.	1.28 at 20°C (68°F)	
Fuse size	Main	15 A	
	Headlight	10 A	
	Turn signal	10 A	
	Ignition	10 A	
	Power source	10 A	

BRAKE + WHEEL

Unit: mm (in)

ITEM		STANDARD	LIMIT
Rear brake pedal height		20 (0.8)	—
Brake disc thickness	Front	5.0 ± 0.2 (0.20 ± 0.008)	4.5 (0.18)
	Rear	6.7 ± 0.2 (0.26 ± 0.008)	6.0 (0.24)
Brake disc runout		—	0.30 (0.012)
Master cylinder bore	Front	15.870 – 15.913 (0.6248 – 0.6265)	—
	Rear	14.000 – 14.043 (0.5512 – 0.5529)	—
Master cylinder piston diam.	Front	15.827 – 15.854 (0.6231 – 0.6242)	—
	Rear	13.959 – 13.984 (0.5495 – 0.5506)	—
Brake caliper cylinder bore	Front	38.180 – 38.256 (1.5031 – 1.5061)	—
	Rear	38.180 – 38.256 (1.5031 – 1.5061)	—
Brake caliper piston diam.	Front	38.098 – 38.148 (1.4999 – 1.5019)	—
	Rear	38.098 – 38.148 (1.4999 – 1.5019)	—
Wheel rim runout	Axial	—	2.0 (0.08)
	Radial	—	2.0 (0.08)
Wheel axle runout	Front	—	0.25 (0.010)
	Rear	—	0.25 (0.010)
Tire size	Front	3.25H18 4PR	—
	Rear	3.75H18 4PR	—
		4.00H18 4PR (Only for E-22)	—
Tire tread depth	Front	—	1.6 (0.06)
	Rear	—	2.0 (0.08)

SUSPENSION

Unit: mm (in)

ITEM	STANDARD		LIMIT
Front fork stroke	150 (5.9)		———
Front fork spring free length	Short	———	54.9 (2.16)
	Long	———	434.4 (17.10)
Front fork oil level	174.8 (6.88)		———
Rear wheel travel	100 (3.94)		———
Swing arm pivot shaft runout	———		0.3 (0.012)

FUEL + OIL

ITEM	SPECIFICATION	
Fuel type	Use gasoline with an octane number of 85 – 95 (Research Method), Preferably unleaded or low-lead type.	
Fuel tank including reserve	16 L (4.2 / 3.5 US/Imp gal)	
reserve	4.0 L (4.2 / 3.5 US/Imp qt)	
Engine oil type	SAE 10W/40	
Engine oil capacity	Change	2400 ml (2.5 / 2.1 US/Imp qt)
	Filter change	2600 ml (2.7 / 2.3 US/Imp qt)
	Overhaul	2700 ml (2.8 / 2.4 US/Imp qt)
Front fork oil type	Fork oil #15 or SAE10W/30:A.T.F.=1:1	
Front fork oil capacity (each leg)	204 ml (6.90 / 7.18 US/Imp oz)	
Brake fluid type	SAE J1703, DOT3 or DOT4	

TIRE PRESSURE

COLD INFLATION TIRE PRESSURE	NORMAL RIDING						CONTINUOUS HIGH SPEED RIDING					
	SOLO RIDING			DUAL RIDING			SOLO RIDING			DUAL RIDING		
	kPa	kg/cm²	psi	kPa	kg/cm²	psi	kPa	kg/cm²	psi	kPa	kg/cm²	psi
FRONT	175	1.75	25	175	1.75	25	200	2.00	28	200	2.00	28
REAR	200	2.00	28	2.50	2.50	36	225	2.25	32	280	2.80	40

WATTAGE

(W)

ITEM		SPECIFICATION
Headlight	HI	60
	LO	55
Parking or city light		4
Tail/Brake light		5/21
Turn signal light		21
Speedometer light		3.4
Tachometer light		3.4
Turn signal indicator light		3.4
High beam indicator light		3.4
Neutral indicator light		3.4
Oil pressure indicator light		3.4
Gear position indicator light		1.4

GS500L

VALVE + GUIDE

Model: GS500L
Unit: mm (in)

ITEM		STANDARD	LIMIT
Valve diam.	IN.	30.0 (1.18)	———
	EX.	25.0 (0.98)	———
Valve lift	IN.	7.2 (0.283)	———
	EX.	7.0 (0.276)	———
Tappet clearance (when cold)	IN. & EX.	0.03 – 0.08	———
Valve guide to valve stem clearance	IN.	0.025 – 0.055 (0.0010 – 0.0022)	0.35 (0.014)
	EX.	0.040 – 0.070 (0.0016 – 0.0028)	0.35 (0.014)
Valve guide I.D.	IN. & EX.	7.000 – 7.015 (0.2756 – 0.2762)	———
Valve stem O.D.	IN.	6.960 – 6.975 (0.2740 – 0.2746)	———
	EX.	6.945 – 6.960 (0.2734 – 0.2740)	———
Valve stem runout	IN. & EX.	———	0.05 (0.002)
Valve head thickness	IN. & EX.	———	0.5 (0.02)
Valve stem end length	IN. & EX.	———	4.0 (0.16)
Valve seat width	IN. & EX.	0.9 – 1.1 (0.035 – 0.043)	———
Valve head radial runout	IN. & EX.	———	0.03 (0.001)
Valve spring free length (IN. & EX.)	INNER	———	35.5 (1.40)
	OUTER	———	41.5 (1.63)
Valve spring tension (IN. & EX.)	INNER	10.6 – 12.8 kg (23.4 – 28.2 lbs) at length 31 mm (1.2 in)	———
	OUTER	22.4 – 26.2 kg (49.4 – 57.8 lbs) at length 35 mm (1.4 in)	———

CAMSHAFT + CYLINDER HEAD

Unit: mm (in)

ITEM	STANDARD		LIMIT
Cam height	IN.	35.485 – 35.515 (1.3970 – 1.3982)	35.190 (1.3854)
	EX.	35.285 – 35.315 (1.3892 – 1.3904)	34.990 (1.3776)
Camshaft journal oil clearance	IN. & EX.	0.032 – 0.066 (0.0013 – 0.0026)	0.150 (0.0059)
Camshaft journal holder I.D.	IN. & EX.	22.012 – 22.025 (0.8666 – 0.8671)	———
Camshaft journal O.D.	IN. & EX.	21.959 – 21.980 (0.8645 – 0.8654)	———
Camshaft runout	IN. & EX.	———	0.10 (0.004)
Cam chain 20 pitch length		———	157.80 (6.213)
Cam chain pin (at arrow "3")		20 th pin	———
Cylinder head distortion		———	0.2 (0.008)

CYLINDER + PISTON + PISTON RING

Unit: mm (in)

ITEM	STANDARD	LIMIT
Compression pressure	9 – 13 kg/cm² (128 – 185 psi)	7.0 kg/cm² (100 psi)
Compression pressure difference	———	2.0 kg/cm² (28 psi)
Piston to cylinder clearance	0.050 – 0.060 (0.0020 – 0.0024)	0.120 (0.0047)
Cylinder bore	53.000 – 53.015 (2.0866 – 2.0872)	53.080 (2.0898)
Piston diam.	52.945 – 52.960 (2.0844 – 2.0850) Measure at the 15 (0.59) from skirt end.	52.880 (2.0819)
Cylinder distortion	———	0.20 (0.008)

Unit: mm (in)

ITEM	STANDARD			LIMIT
Piston ring free end gap	1st	T	Approx. 5.0 (0.20)	4.0 (0.16)
	2nd	T	Approx. 8.5 (0.33)	6.8 (0.27)
Piston ring end gap	1st		0.10 – 0.30 (0.004 – 0.012)	0.70 (0.028)
	2nd		0.10 – 0.25 (0.004 – 0.010)	0.70 (0.028)
Piston ring to groove clearance	1st		———	0.180 (0.0071)
	2nd		———	0.150 (0.0059)
Piston ring groove width	1st		1.21 – 1.23 (0.0476 – 0.0484)	———
	2nd		1.21 – 1.23 (0.0476 – 0.0484)	———
	Oil		2.51 – 2.53 (0.0988 – 0.0996)	———
Piston ring thickness	1st		1.175 – 1.190 (0.0463 – 0.0469)	———
	2nd		1.170 – 1.190 (0.0461 – 0.0469)	———
Piston pin bore			16.002 – 16.008 (0.6300 – 0.6302)	16.030 (0.6311)
Piston pin O.D.			15.995 – 16.000 (0.6297 – 0.6300)	15.980 (0.6291)

CONROD + CRANKSHAFT

Unit: mm (in)

ITEM	STANDARD	LIMIT
Conrod small end I.D.	16.006 – 16.014 (0.6302 – 0.6305)	16.040 (0.6315)
Conrod deflection	———	3.0 (0.12)
Conrod big end side clearance	0.10 – 0.65 (0.004 – 0.026)	1.0 (0.039)
Crankshaft runout	———	0.10 (0.004)

OIL PUMP

ITEM	STANDARD	LIMIT
Oil pump reduction ratio	1.821 (87 / 44 x 35 / 38)	———
Oil pressure (at 60°C, 140°F)	Above 0.1 kg/cm² (1.42 psi) Below 0.3 kg/cm² (4.27 psi) at 3000 r/min.	———

CLUTCH

Unit: mm (in)

ITEM	STANDARD	LIMIT
Clutch cable play	2 – 3 (0.08 – 0.12)	———
Clutch release screw	¼ – ½ Turn back	———
Drive plate thickness	2.9 – 3.1 (0.114 – 0.122)	2.6 (0.10)
Drive plate claw width	11.8 – 12.0 (0.465 – 0.472)	11.0 (0.43)
Driven plate thickness	1.6 ± 0.06 (0.063 ± 0.002)	———
Driven plate distortion	———	0.1 (0.004)
Clutch spring free length	———	36.5 (1.44)

TRANSMISSION + DRIVE CHAIN

Unit: mm (in)

ITEM	STANDARD		LIMIT
Primary reduction ratio	1.977 (87 / 44)		———
Final reduction ratio	3.642 (51 / 14)		———
Gear ratios	Low	2.666 (32 / 12)	———
	2nd	1.777 (32 / 18)	———
	3rd	1.380 (29 / 21)	———
	4th	1.173 (27 / 23)	———
	5th	1.045 (23 / 22)	———
	Top	0.956 (22 / 23)	———
Shift fork to groove clearance	0.1 – 0.3 (0.004 – 0.012)		0.5 (0.020)
Shift fork groove width	5.5 – 5.6 (0.217 – 0.220)		———
Shift fork thickness	5.3 – 5.4 (0.195 – 0.199)		———
Drive chain	Type	D.I.D.: 50 HDL TAKASAGO: RK50SHO	———
	Links	110	———
	20 pitch length	———	320.0 (12.60)
Drive chain slack	20 – 30 (0.8 – 1.2)		———

CARBURETOR

Unit: mm (in)

ITEM	SPECIFICATION
Carburetor type	MIKUNI BS32SS, Four
Bore size	32
I. D. No.	47150
Idle r/min.	1150 ± 50 r/min.
Fuel level	5.0 ± 1.0 (0.20 ± 0.04)
Float height	22.4 ± 1.0 (0.88 ± 0.04)
Main jet (M. J.)	#97.5
Main air jet (M. A. J.)	1.6
Jet needle (J. N.)	5F42 – 3rd
Needle jet (N. J.)	X – 6
Throttle valve	# 135
Pilot jet (P. J.)	#40
By pass (B. P.)	1.0, 0.8 0.8
Pilot outlet (P. O.)	0.7
Valve seat (V. S.)	2.0
Starter jet (G. S.)	#35, 0.5
Pilot screw (P. S.)	PRE–SET
Pilot air jet (P. A. J.)	#120
Throttle cable play	0.5 – 1.0 (0.02 – 0.04)
Choke cable play	0.5 – 1.0 (0.02 – 0.04)

ELECTRICAL

Unit: mm (in)

ITEM	SPECIFICATION		
Ignition timing	15° B.T.D.C. Below 1500 ± 100 r/min and 40° B.T.D.C. Above 2350 ± 100 r/min.		
Firing order	1. 2. 4. 3		
Spark plug	Type	NGK DR8ES–L or N.D. X24ESR–U	
	Gap	0.6 – 0.7 (0.024 – 0.028)	
Signal coil resistance	Approx. 60 – 80 Ω		
Ignition coil resistance	Primary	O/W – W or B/Y Approx. 3 – 5 Ω	
	Secondary	Plug cap – Plug cap Approx. 30 – 35 kΩ	
Generator no-load voltage	More than 80 V (AC) at 5000 r/min.		
Regulated voltage	14.0 – 14.5 V at 5000 r/min.		
Starter motor	Brush length	N. D.	Limit: 6 (0.24)
	Commutator under cut		Limit: 0.2 (0.008)
Starter relay resistance	Approx. 3 – 4 Ω		
Battery	Type designation	YB10L–A2	
	Capacity	12V 43.2kC (12Ah)/10HR	
	Standard electrolyte S. G.	1.28 at 20°C (68°F)	
Fuse size	Main	15 A	
	Headlight	10 A	
	Turn signal	10 A	
	Ignition	10 A	
	Power source	10 A	

BRAKE + WHEEL

Unit: mm (in)

ITEM		STANDARD	LIMIT
Rear brake pedal height		20 (0.8)	—
Brake disc thickness	Front	5.0 ± 0.2 (0.20 ± 0.008)	4.5 (0.18)
	Rear	6.7 ± 0.2 (0.26 ± 0.008)	6.0 (0.24)
Brake disc runout		—	0.30 (0.012)
Master cylinder bore	Front	15.870 – 15.913 (0.6248 – 0.6265)	—
	Rear	14.000 – 14.043 (0.5512 – 0.5529)	—
Master cylinder piston diam.	Front	15.827 – 15.854 (0.6231 – 0.6242)	—
	Rear	13.959 – 13.984 (0.5495 – 0.5506)	—
Brake caliper cylinder bore	Front	38.180 – 38.256 (1.5031 – 1.5061)	—
	Rear	38.180 – 38.256 (1.5031 – 1.5061)	—
Brake caliper piston diam.	Front	38.098 – 38.148 (1.4999 – 1.5019)	—
	Rear	38.098 – 38.148 (1.4999 – 1.5019)	—
Wheel rim runout	Axial	—	2.0 (0.08)
	Radial	—	2.0 (0.08)
Wheel axle runout	Front	—	0.25 (0.010)
	Rear	—	0.25 (0.010)
Tire size	Front	3.25H18 4PR	—
	Rear	4.50H17 4PR	—
Tire tread depth	Front	—	1.6 (0.06)
	Rear	—	2.0 (0.08)

SUSPENSION

Unit: mm (in)

ITEM	STANDARD		LIMIT
Front fork stroke	150 (5.9)		———
Front fork spring free length	Short	———	152.4 (6.00)
	Long	———	373.4 (14.70)
Front fork oil level	219.6 (8.65)		———
Rear wheel travel	100 (3.94)		———
Swing arm pivot shaft runout	———		0.3 (0.012)

FUEL + OIL

ITEM	SPECIFICATION	
Fuel type	Use gasoline with an octane number of 85 – 95 (Research Method), Preferably unleaded or low-lead type.	
Fuel tank including reserve	12 L (3.2 / 2.6 US/Imp gal)	
reserve	4.0 L (3.2 / 2.6 US/Imp qt)	
Engine oil type	SAE 10W/40	
Engine oil capacity	Change	2400 ml (2.5 / 2.1 US/Imp qt)
	Filter change	2600 ml (2.7 / 2.3 US/Imp qt)
	Overhaul	2700 ml (2.8 / 2.4 US/Imp qt)
Front fork oil type	Fork oil #15 or SAE10W/30:A.T.F.=1:1	
Front fork oil capacity (each leg)	196 ml (6.62 / 6.90 US/Imp oz)	
Brake fluid type	SAE J1703, DOT3, or DOT4	

TIRE PRESSURE

COLD INFLATION TIRE PRESSURE	NORMAL RIDING						CONTINUOUS HIGH SPEED RIDING					
	SOLO RIDING			DUAL RIDING			SOLO RIDING			DUAL RIDING		
	kPa	kg/cm²	psi	kPa	kg/cm²	psi	kPa	kg/cm²	psi	kPa	kg/cm²	psi
FRONT	175	1.75	25	175	1.75	25	200	2.00	28	200	2.00	28
REAR	200	2.00	28	225	2.25	32	225	2.25	32	280	2.80	40

WATTAGE

(W)

ITEM		SPECIFICATION
Headlight	HI	60
	LO	55
Parking or city light		4
Tail/Brake light		5/21
Turn signal light		21
Speedometer light		3.4
Tachometer light		3.4
Turn signal indicator light		3.4
High beam indicator light		3.4
Neutral indicator light		3.4
Oil pressure indicator light		3.4
Fuel meter light		3.4
Gear position indicator light		1.4

GS500M

VALVE + GUIDE

Model: GS500M
Unit: mm (in)

ITEM		STANDARD	LIMIT
Valve diam.	IN.	30.0 (1.18)	———
	EX.	25.0 (0.98)	———
Valve lift	IN.	7.2 (0.283)	———
	EX.	7.0 (0.276)	———
Tappet clearance (when cold)	IN. & EX.	0.03 – 0.08	———
Valve guide to valve stem clearance	IN.	0.025 – 0.055 (0.0010 – 0.0022)	0.35 (0.014)
	EX.	0.040 – 0.070 (0.0016 – 0.0028)	0.35 (0.014)
Valve guide I.D.	IN. & EX.	7.000 – 7.015 (0.2756 – 0.2762)	———
Valve stem O.D.	IN.	6.960 – 6.975 (0.2740 – 0.2746)	———
	EX.	6.945 – 6.960 (0.2734 – 0.2740)	———
Valve stem runout	IN. & EX.	———	0.05 (0.002)
Valve head thickness	IN. & EX.	———	0.5 (0.02)
Valve stem end length	IN. & EX.	———	4.0 (0.16)
Valve seat width	IN. & EX.	0.9 – 1.1 (0.035 – 0.043)	———
Valve head radial runout	IN. & EX.	———	0.03 (0.001)
Valve spring free length (IN. & EX.)	INNER	———	35.5 (1.40)
	OUTER	———	41.5 (1.63)
Valve spring tension (IN. & EX.)	INNER	10.6 – 12.8 kg (23.4 – 28.2 lbs) at length 31 mm (1.2 in)	———
	OUTER	22.4 – 26.2 kg (49.4 – 57.8 lbs) at length 35 mm (1.4 in)	———

CAMSHAFT + CYLINDER HEAD

Unit: mm (in)

ITEM	STANDARD		LIMIT
Cam height	IN.	35.485 – 35.515 (1.3970 – 1.3982)	35.190 (1.3854)
	EX.	35.285 – 35.315 (1.3892 – 1.3904)	34.990 (1.3776)
Camshaft journal oil clearance	IN. & EX.	0.032 – 0.066 (0.0013 – 0.0026)	0.150 (0.0059)
Camshaft journal holder I.D.	IN. & EX.	22.012 – 22.025 (0.8666 – 0.8671)	———
Camshaft journal O.D.	IN. & EX.	21.959 – 21.980 (0.8645 – 0.8654)	———
Camshaft runout	IN. & EX.	———	0.10 (0.004)
Cam chain 20 pitch length		———	157.80 (6.213)
Cam chain pin (at arrow "3")		20 th pin	———
Cylinder head distortion		———	0.2 (0.008)

CYLINDER + PISTON + PISTON RING

Unit: mm (in)

ITEM	STANDARD	LIMIT
Compression pressure	9 – 13 kg/cm² (128 – 185 psi)	7.0 kg/cm² (100 psi)
Compression pressure difference	———	2.0 kg/cm² (28 psi)
Piston to cylinder clearance	0.050 – 0.060 (0.0020 – 0.0024)	0.120 (0.0047)
Cylinder bore	53.000 – 53.015 (2.0866 – 2.0872)	53.080 (2.0898)
Piston diam.	52.945 – 52.960 (2.0844 – 2.0850) Measure at the 15 (0.59) from skirt end.	52.880 (2.0819)
Cylinder distortion	———	0.20 (0.008)

Unit: mm (in)

ITEM	STANDARD			LIMIT
Piston ring free end gap	1st	T	Approx. 5.0 (0.20)	4.0 (0.16)
	2nd	T	Approx. 8.5 (0.33)	6.8 (0.27)
Piston ring end gap	1st		0.10 – 0.30 (0.004 – 0.012)	0.70 (0.028)
	2nd		0.10 – 0.25 (0.004 – 0.010)	0.70 (0.028)
Piston ring to groove clearance	1st		———	0.180 (0.0071)
	2nd		———	0.150 (0.0059)
Piston ring groove width	1st		1.21 – 1.23 (0.0476 – 0.0484)	———
	2nd		1.21 – 1.23 (0.0476 – 0.0484)	———
	Oil		2.51 – 2.53 (0.0988 – 0.0996)	———
Piston ring thickness	1st		1.175 – 1.190 (0.0463 – 0.0469)	———
	2nd		1.170 – 1.190 (0.0461 – 0.0469)	———
Piston pin bore	16.002 – 16.008 (0.6300 – 0.6302)			16.030 (0.6311)
Piston pin O.D.	15.995 – 16.000 (0.6297 – 0.6300)			15.980 (0.6291)

CONROD + CRANKSHAFT

Unit: mm (in)

ITEM	STANDARD	LIMIT
Conrod small end I.D.	16.006 – 16.014 (0.6302 – 0.6305)	16.040 (0.6315)
Conrod deflection	———	3.0 (0.12)
Conrod big end side clearance	0.10 – 0.65 (0.004 – 0.026)	1.0 (0.039)
Crankshaft runout	———	0.10 (0.004)

OIL PUMP

ITEM	STANDARD	LIMIT
Oil pump reduction ratio	1.821 (87 / 44 x 35 / 38)	———
Oil pressure (at 60°C, 140°F)	Above 0.1 kg/cm² (1.42 psi) Below 0.3 kg/cm² (4.27 psi) at 3000 r/min.	———

CLUTCH

Unit: mm (in)

ITEM	STANDARD	LIMIT
Clutch cable play	2 – 3 (0.08 – 0.12)	———
Clutch release screw	¼ – ½ Turn back	———
Drive plate thickness	2.9 – 3.1 (0.114 – 0.122)	2.6 (0.10)
Drive plate claw width	11.8 – 12.0 (0.465 – 0.472)	11.0 (0.43)
Driven plate thickness	1.6 ± 0.06 (0.063 ± 0.002)	———
Driven plate distortion	———	0.1 (0.004)
Clutch spring free length	———	36.5 (1.44)

TRANSMISSION + DRIVE CHAIN

Unit: mm (in)

ITEM		STANDARD		LIMIT
Primary reduction ratio			1.977 (87 / 44)	———
Final reduction ratio			3.500 (49 / 14)	———
	E–39		3.571 (50 / 14)	———
Gear ratios		Low	2.666 (32 / 12)	———
		2nd	1.777 (32 / 18)	———
		3rd	1.380 (29 / 21)	———
		4th	1.173 (27 / 23)	———
		5th	1.045 (23 / 22)	———
		Top	0.956 (22 / 23)	———
Shift fork to groove clearance			0.1 – 0.3 (0.004 – 0.012)	0.5 (0.020)
Shift fork groove width			5.5 – 5.6 (0.217 – 0.220)	———
Shift fork thickness			5.3 – 5.4 (0.195 – 0.199)	———
Drive chain		Type	D.I.D.: 50 HDL TAKASAGO: RK50SHO	———
		Links	110	———
	E–39	Links	112	
		20 pitch length	———	320.0 (12.60)
Drive chain slack			20 – 30 (0.8 – 1.2)	———

CARBURETOR

Unit: mm (in)

ITEM	SPECIFICATION
Carburetor type	MIKUNI BS32SS, Four
Bore size	32
I. D. No.	47150
Idle r/min.	1150 ± 50 r/min.
Fuel level	5.0 ± 1.0 (0.20 ± 0.04)
Float height	22.4 ± 1.0 (0.88 ± 0.04)
Main jet (M. J.)	#97.5
Main air jet (M. A. J.)	1.6
Jet needle (J. N.)	5F42 – 3rd
Needle jet (N. J.)	X – 6
Throttle valve	# 135
Pilot jet (P. J.)	#40
By pass (B. P.)	1.0, 0.8, 0.8
Pilot outlet (P. O.)	0.7
Valve seat (V. S.)	2.0
Starter jet (G. S.)	#35, 0.5
Pilot screw (P. S.)	PRE–SET
Pilot air jet (P. A. J.)	#120
Throttle cable play	0.5 – 1.0 (0.02 – 0.04)
Choke cable play	0.5 – 1.0 (0.02 – 0.04)

ELECTRICAL

Unit: mm (in)

ITEM	SPECIFICATION		
Ignition timing	15° B.T.D.C. Below 1500 ± 100 r/min and 40° B.T.D.C. Above 2350 ± 100 r/min.		
Firing order	1. 2. 4. 3		
Spark plug	Type	NGK DR8ES–L or N.D. X24ESR–U	
	Gap	0.6 – 0.7 (0.024 – 0.028)	
Spark performance	Over 8 (0.3) at 1 atm		
Signal coil resistance	Approx. 60 – 80 Ω		
Ignition coil resistance	Primary	O/W – W or B/Y Approx. 3 – 5 Ω	
	Secondary	Plug cap – Plug cap Approx. 30 – 35 kΩ	
Generator no-load voltage	More than 80 V (AC) at 5000 r/min.		
Regulated voltage	14.0 – 14.5 V at 5000 r/min.		
Starter motor	Brush length	N. D.	Limit: 6 (0.24)
	Commutator under cut		Limit: 0.2 (0.008)
Starter relay resistance	Approx. 3 – 4 Ω		
Battery	Type designation	YB10L–A2	
	Capacity	12V 43.2kC (12Ah)/10HR	
	Standard electrolyte S. G.	1.28 at 20°C (68°F)	
Fuse size	Main	15 A	
	Headlight	10 A	
	Turn signal	10 A	
	Ignition	10 A	
	Power source	10 A	

BRAKE + WHEEL

Unit: mm (in)

ITEM		STANDARD	LIMIT
Rear brake pedal height		40 (1.6)	—
Brake disc thickness	Front	5.0 ± 0.2 (0.20 ± 0.008)	4.5 (0.18)
	Rear	6.7 ± 0.2 (0.26 ± 0.008)	6.0 (0.24)
Brake disc runout		—	0.30 (0.012)
Master cylinder bore	Front	15.870 – 15.913 (0.6248 – 0.6265)	—
	Rear	14.000 – 14.043 (0.5512 – 0.5529)	—
Master cylinder piston diam.	Front	15.827 – 15.854 (0.6231 – 0.6242)	—
	Rear	13.959 – 13.984 (0.5495 – 0.5506)	—
Brake caliper cylinder bore	Front	38.180 – 38.256 (1.5031 – 1.5061)	—
	Rear	38.180 – 38.256 (1.5031 – 1.5061)	—
Brake caliper piston diam.	Front	38.098 – 38.148 (1.4999 – 1.5019)	—
	Rear	38.098 – 38.148 (1.4999 – 1.5019)	—
Wheel rim runout	Axial	—	2.0 (0.08)
	Radial	—	2.0 (0.08)
Wheel axle runout	Front	—	0.25 (0.010)
	Rear	—	0.25 (0.010)
Tire size	Front	3.25H18 4PR	—
	Rear	3.75H18 4PR	—
E–39		4.00H18 4PR	—
Tire tread depth	Front	—	1.6 (0.06)
	Rear	—	2.0 (0.08)

SUSPENSION

Unit: mm (in)

ITEM	STANDARD		LIMIT
Front fork stroke	150 (5.9)		———
Front fork spring free length	Short	———	57.1 (2.25)
	Long	———	423.2 (16.66)
Front fork oil level	194 (7.64)		———
Rear wheel travel	105 (4.13)		———
Swing arm pivot shaft runout	———		0.3 (0.012)

FUEL + OIL

ITEM	SPECIFICATION	
Fuel type	Use gasoline with an octane number of 85 – 95 (Research Method), Preferably unleaded or low-lead type.	
Fuel tank including reserve	23 L (6.1 / 5.1 US/Imp gal)	
reserve	4.0 L (4.2 / 3.5 US/Imp qt)	
Engine oil type	SAE 10W/40	
Engine oil capacity	Change	2400 ml (2.5 / 2.1 US/Imp qt)
	Filter change	2600 ml (2.7 / 2.3 US/Imp qt)
	Overhaul	2700 ml (2.8 / 2.4 US/Imp qt)
Front fork oil type	Fork oil #15 or SAE10W/30:A.T.F.=1:1	
Front fork oil capacity (each leg)	195 ml (6.59 / 6.87 US/Imp oz)	
Brake fluid type	SAE J1703, DOT3, or DOT4	

TIRE PRESSURE

COLD INFLATION TIRE PRESSURE	NORMAL RIDING						CONTINUOUS HIGH SPEED RIDING					
	SOLO RIDING			DUAL RIDING			SOLO RIDING			DUAL RIDING		
	kPa	kg/cm²	psi	kPa	kg/cm²	psi	kPa	kg/cm²	psi	kPa	kg/cm²	psi
FRONT	175	1.75	25	175	1.75	25	200	2.00	28	200	2.00	28
REAR	200	2.00	28	2.50	2.50	36	225	2.25	32	280	2.80	40

WATTAGE

(W)

ITEM		SPECIFICATION
Headlight	HI	60
	LO	55
Parking or city light		4
Tail/Brake light		5/21
Turn signal light		21
Speedometer light		3.4
Tachometer light		3.4
Turn signal indicator light		3.4
High beam indicator light		3.4
Neutral indicator light		3.4
Oil pressure indicator light		3.4
License light		5
Gear position indicator light		1.4

GS550

VALVE + GUIDE

Model: GS550
Unit: mm (in)

ITEM		STANDARD	LIMIT
Valve diam.	IN.	32.0 (1.26)	———
	EX.	27.0 (1.06)	———
Valve lift	IN.	7.2 (0.283)	———
	EX.	7.0 (0.276)	———
Tappet clearance (when cold)	IN. & EX.	0.03 – 0.08 (0.001 – 0.003)	———
Valve guide to valve stem clearance	IN.	0.020 – 0.050 (0.0008 – 0.0020)	0.35 (0.014)
	EX.	0.030 – 0.060 (0.0012 – 0.0024)	0.35 (0.014)
Valve guide I.D.	IN. & EX.	7.000 – 7.015 (0.2756 – 0.2762)	———
Valve stem O.D.	IN.	6.965 – 6.980 (0.2742 – 0.2748)	———
	EX.	6.955 – 6.970 (0.2738 – 0.2744)	———
Valve stem runout	IN. & EX.	———	0.05 (0.002)
Valve head thickness	IN. & EX.	———	0.5 (0.02)
Valve stem end length	IN. & EX.	———	4.0 (0.16)
Valve seat width	IN. & EX.	0.9 – 1.1 (0.035 – 0.043)	———
Valve head radial runout	IN. & EX.	———	0.03 (0.001)
Valve spring free length (IN. & EX.)	INNER	———	33.9 (1.33)
	OUTER	———	41.3 (1.63)
Valve spring tension (IN. & EX.)	INNER	8.9 – 12.5 kg (19.6 – 27.6 lbs) at length 31 mm (1.2 in)	———
	OUTER	22.1 – 27.1 kg (48.7 – 59.7 lbs) at length 35 mm (1.4 in)	———

CAMSHAFT + CYLINDER HEAD

Unit: mm (in)

ITEM		STANDARD	LIMIT
Cam height	IN.	35.485 – 35.515 (1.3970 – 1.3982)	35.190 (1.3854)
	EX.	35.285 – 35.315 (1.3892 – 1.3904)	34.990 (1.3776)
Camshaft journal oil clearance	IN. & EX.	0.020 – 0.054 (0.0008 – 0.0021)	0.150 (0.0059)
Camshaft journal holder I.D.	IN. & EX.	22.000 – 22.013 (0.8661 – 0.8667)	———
Camshaft journal O.D.	IN. & EX.	21.959 – 21.980 (0.8645 – 0.8654)	———
Camshaft runout	IN. & EX.	———	0.10 (0.004)
Cam chain 20 pitch length		———	157.8 (6.213)
Cam chain pin (at arrow "3")		20 th pin	———
Cylinder head distortion		———	0.2 (0.008)

CYLINDER + PISTON + PISTON RING

Unit: mm (in)

ITEM	STANDARD	LIMIT
Compression pressure	9.0 – 13.0 kg/cm² (128 – 185 psi)	7.0 kg/cm² (100 psi)
Compression pressure difference	———	2 kg/cm² (28 psi)
Piston to cylinder clearance	0.045 – 0.055 (0.0018 – 0.0022)	0.120 (0.0047)
Cylinder bore	56.000 – 56.015 (2.2047 – 2.2053)	56.085 (2.2081)
Piston diam.	55.950 – 55.965 (2.2028 – 2.2033) Measure at the 15 (0.59) from skirt end.	55.880 (2.2000)
Cylinder distortion	———	0.26 (0.008)

Unit: mm (in)

ITEM	STANDARD			LIMIT
Piston ring free end gap	1st	N	Approx. 6.5 (0.26)	5.2 (0.20)
		T	Approx. 6.5 (0.26)	5.2 (0.20)
	2nd	N	Approx. 6.5 (0.26)	5.2 (0.20)
		T	Approx. 6.5 (0.26)	5.2 (0.20)
Piston ring end gap	1st		0.1 – 0.3 (0.004 – 0.012)	0.70 (0.028)
	2nd		0.1 – 0.3 (0.004 – 0.012)	0.70 (0.028)
Piston ring to groove clearance	1st		———	0.180 (0.0071)
	2nd		———	0.150 (0.0059)
Piston ring groove width	1st		1.21 – 1.23 (0.0476 – 0.0484)	———
	2nd		1.21 – 1.23 (0.0476 – 0.0484)	———
	Oil		2.51 – 2.53 (0.0988 – 0.0996)	———
Piston ring thickness	1st		1.175 – 1.190 (0.0463 – 0.0469)	———
	2nd		1.170 – 1.190 (0.0461 – 0.0469)	———
Piston pin bore			16.002 – 16.008 (0.6300 – 0.6302)	16.030 (0.6311)
Piston pin O.D.			15.995 – 16.000 (0.6297 – 0.6300)	15.980 (0.6291)

CONROD + CRANKSHAFT

Unit: mm (in)

ITEM	STANDARD	LIMIT
Conrod small end I.D.	16.006 – 16.014 (0.6302 – 0.6305)	16.040 (0.6315)
Conrod deflection	———	3.0 (0.12)
Conrod big end side clearance	0.10 – 0.65 (0.004 – 0.026)	1.0 (0.039)
Crankshaft runout	———	0.10 (0.004)

OIL PUMP

ITEM	STANDARD	LIMIT
Oil pump reduction ratio	1.821 (87 / 44 × 35 / 38)	———
Oil pressure (at 60°C, 140°F)	Above 0.1 kg/cm² (1.42 psi) Below 0.3 kg/cm² (4.27 psi) at 3000 r/min.	———

CLUTCH

Unit: mm (in)

ITEM	STANDARD	LIMIT
Clutch cable play	2 – 3 (0.08 – 0.12)	———
Clutch release screw	¼ – ½ Turn back	———
Drive plate thickness	2.9 – 3.1 (0.114 – 0.122)	2.6 (0.10)
Drive plate claw width	11.8 – 12.0 (0.465 – 0.472)	11.0 (0.433)
Driven plate thickness	1.6 ± 0.06 (0.063 ± 0.002)	———
Driven plate distortion	———	0.1 (0.004)
Clutch spring free length	———	36.5 (1.44)

TRANSMISSION + DRIVE CHAIN

Unit: mm (in)

ITEM	STANDARD		LIMIT
Primary reduction ratio	1.977 (87 / 44)		———
Final reduction ratio	3.333 (50 / 15)		———
Gear ratios	Low	2.666 (32 / 12)	———
	2nd	1.777 (32 / 18)	———
	3rd	1.380 (29 / 21)	———
	4th	1.173 (27 / 23)	———
	5th	1.045 (23 / 22)	———
	Top	0.956 (22 / 23)	———
Shift fork to groove clearance	0.1 – 0.3 (0.004 – 0.012)		0.5 (0.020)
Shift fork groove width	5.5 – 5.6 (0.217 – 0.220)		———
Shift fork thickness	5.3 – 5.4 (0.195 – 0.199)		———
Drive chain	Type	D.I.D.: 50HDL TAKASAGO: RK50SHO	———
	Links	110	———
	20 pitch length	———	320.0 (12.60)
Drive chain slack	20 – 30 (0.8 – 1.2)		———

CARBURETOR

Unit: mm (in)

ITEM	SPECIFICATION
Carburetor type	MIKUNI BS32SS, Four
Bore size	32
I. D. No.	47090
Idle r/min.	1100 ± 50 r/min.
Fuel level	5.0 ± 1.0 (0.20 ± 0.04)
Float height	22.4 ± 1.0 (0.88 ± 0.04)
Main jet (M. J.)	# 92.5
Main air jet (M. A. J.)	1.6
Jet needle (J. N.)	5F42–3rd
Needle jet (N. J.)	X–6
Throttle valve	# 135
Pilot jet (P. J.)	# 40
By pass (B. P.)	1.0, 0.8, 0.8
Pilot outlet (P. O.)	0.7
Valve seat (V. S.)	2.0
Starter jet (G. S.)	#35
Pilot screw (P. S.)	PRE–SET
Pilot air jet (P. A. J.)	# 120
Throttle cable play	0.5 – 1.0 (0.02 – 0.04)
Choke cable play	0.5 – 1.0 (0.02 – 0.04)

ELECTRICAL

Unit: mm (in)

ITEM		SPECIFICATION	
Ignition timing		15° B.T.D.C. Below 1500 ± 100 r/min and 40° B.T.D.C. Above 2350 ± 100 r/min.	
Firing order		1, 2, 4, 3	
Spark plug		Type	NGK B8ES or N.D.W24ES–U
		Gap	0.6 – 0.8 (0.024 – 0.031)
	E–06	Type	NGK BR8ES or N.D. W24ESR
	E–06	Gap	0.6 – 0.8 (0.024 – 0.031)
Spark performance		Over 8 (0.3) at 1 atm	
Signal coil resistance		Approx. 60 – 80 Ω	
Ignition coil resistance		Primary	O/W – W or B/Y Approx. 3 – 5 Ω
		Secondary	Plug cap – Plug cap Approx. 30 – 35 kΩ
Generator no-load voltage		More than 80 V (AC) at 5000 r/min.	
Regulated voltage		14.0 – 15.5 V at 5000 r/min.	
Starter motor		Brush length	N. D. / Limit 6 (0.24)
		Commutator under cut	Limit 0.2 (0.008)
Starter relay resistance		Approx. 3 – 4 Ω	
Battery		Type designation	YB10L –A2
		Capacity	12V 43.2kC (12Ah)/10HR
		Standard electrolyte S. G.	1.28 at 20°C (68°F)
Fuse size		Main	15 A
		Headlight	10 A
		Turn signal	10 A
		Ignition	10 A
		Power source	10 A

BRAKE + WHEEL

Unit: mm (in)

ITEM			STANDARD	LIMIT
Rear brake pedal free travel (Drum brake model)			20 – 30 (0.8 – 1.2)	———
Rear brake pedal height			20 (0.8)	———
Brake drum I.D.		Rear	———	180.7 (7.11)
Brake lining thickness			———	1.5 (0.06)
Brake disc thickness	E–28	Front	6.0 ± 0.2 (0.24 ± 0.008)	5.5 (0.22)
			5.0 ± 0.2 (0.20 ± 0.008)	4.5 (0.18)
		Rear	6.7 ± 0.2 (0.26 ± 0.008)	6.0 (0.24)
Brake disc runout			———	0.30 (0.012)
Master cylinder bore	E–28	Front	14.000 – 14.043 (0.5512 – 0.5529)	———
			15.870 – 15.913 (0.6248 – 0.6265)	———
		Rear	14.000 – 14.043 (0.5512 – 0.5529)	
Master cylinder piston diam.	E–28	Front	13.941 – 13.968 (0.5489 – 0.5499)	———
			15.827 – 15.854 (0.6231 – 0.6242)	———
		Rear	13.957 – 13.984 (0.5495 – 0.5506)	
Brake caliper cylinder bore	E–28	Front	42.860 – 42.899 (1.6874 – 1.6889)	———
			38.180 – 38.256 (1.5031 – 1.5061)	———
		Rear	38.180 – 38.256 (1.5031 – 1.5061)	
Brake caliper piston diam.	E–28	Front	42.785 – 42.810 (1.6844 – 1.6854)	———
			38.098 – 38.148 (1.4999 – 1.5019)	———
		Rear	38.098 – 38.148 (1.4999 – 1.5019)	

Unit: mm (in)

ITEM			STANDARD	LIMIT
Wheel rim runout		Axial	—	2.0 (0.08)
		Radial	—	2.0 (0.08)
Wheel axle runout		Front	—	0.25 (0.010)
		Rear	—	0.25 (0.010)
Tire size		Front	3.25H19 4PR	—
		Rear	3.75H18 4PR	—
	E–22		4.00H18 4PR	—
Tire tread depth		Front	—	1.6 (0.06)
		Rear	—	2.0 (0.08)

SUSPENSION

Unit: mm (in)

ITEM			STANDARD	LIMIT
Front fork stroke			150 (5.9)	—
Front fork spring free length	E–28	Short	—	92.9 (3.66)
		Long	—	396.4 (15.61)
		Short	—	54.9 (2.16)
		Long	—	434.4 (17.10)
Front fork oil level	E–28		201 (7.91)	—
			174.8 (6.88)	
Rear wheel travel			100 (3.94)	—
Swing arm pivot shaft runout			—	0.3 (0.012)

FUEL + OIL

ITEM		SPECIFICATION		
Fuel type		Use gasoline with an octane number of 85 – 95 (Research Method), Preferably unleaded or low-lead type		
Fuel tank including reserve			16 (4.2 / 3.5	L US/Imp gal)
reserve			4.0 (4.2 / 3.5	L US/Imp qt)
Engine oil type		SAE 10W/40		
Engine oil capacity		Change	2400 (2.5 / 2.1	ml US/Imp qt)
		Filter change	2600 (2.7 / 2.3	ml US/Imp qt)
		Overhaul	2700 (2.8 / 2.4	ml US/Imp qt)
Front fork oil type		Fork oil #15 or SAE 10W/30 : A.T.F. = 1:1		
Front fork oil capacity (each leg)	E–28		190 (6.42 / 6.69	ml US/Imp oz)
			204 (6.90 / 7.18	ml US/Imp oz)
Brake fluid type		SAE J1703, DOT3 or DOT4		

TIRE PRESSURE

COLD INFLATION TIRE PRESSURE	NORMAL RIDING						CONTINUOUS HIGH SPEED RIDING					
	SOLO RIDING			DUAL RIDING			SOLO RIDING			DUAL RIDING		
	kPa	kg/cm²	psi	kPa	kg/cm²	psi	kPa	kg/cm²	psi	kPa	kg/cm²	psi
FRONT	175	1.75	25	175	1.75	25	200	2.00	28	200	2.00	28
REAR	200	2.00	28	250	2.50	36	225	2.25	32	280	2.80	40

WATTAGE

(W)

ITEM		SPECIFICATION	
		E01, 06, 24, 28 and 30	The others
Headlight	HI	60	←
	LO	55	←
Parking or city light			4
Tail/Brake light		8/23	5/21
Turn signal light		23	21
Speedometer light		3.4	←
Tachometer light		3.4	←
Turn signal indicator light		3.4	←
High beam indicator light		3.4	←
Neutral indicator light		3.4	←
Oil pressure indicator light		3.4	←
Gear position indicator light		1.4	←

GS550L

VALVE + GUIDE

Model: GS550L
Unit: mm (in)

ITEM		STANDARD	LIMIT
Valve diam.	IN.	32.0 (1.26)	———
	EX.	27.0 (1.06)	———
Valve lift	IN.	7.2 (0.283)	———
	EX.	7.0 (0.276)	———
Tappet clearance (when cold)	IN. & EX.	0.03 – 0.08 (0.001 – 0.003)	———
Valve guide to valve stem clearance	IN.	0.020 – 0.050 (0.0008 – 0.0020)	0.35 (0.014)
	EX.	0.030 – 0.060 (0.0012 – 0.0024)	0.35 (0.014)
Valve guide I.D.	IN. & EX.	7.000 – 7.015 (0.2756 – 0.2762)	———
Valve stem O.D.	IN.	6.965 – 6.980 (0.2742 – 0.2748)	———
	EX.	6.955 – 6.970 (0.2738 – 0.2744)	———
Valve stem runout	IN. & EX.	———	0.05 (0.002)
Valve head thickness	IN. & EX.	———	0.5 (0.02)
Valve stem end length	IN. & EX.	———	4.0 (0.16)
Valve seat width	IN. & EX.	0.9 – 1.1 (0.035 – 0.043)	———
Valve head radial runout	IN. & EX.	———	0.03 (0.001)
Valve spring free length (IN. & EX.)	INNER	———	33.9 (1.33)
	OUTER	———	41.3 (1.63)
Valve spring tension (IN. & EX.)	INNER	8.9 – 12.5 kg (19.6 – 27.6 lbs) at length 31 mm (1.2 in)	———
	OUTER	22.1 – 27.1 kg (48.7 – 59.7 lbs) at length 35 mm (1.4 in)	———

CAMSHAFT + CYLINDER HEAD

Unit: mm (in)

ITEM	STANDARD		LIMIT
Cam height	IN.	35.485 – 35.515 (1.3970 – 1.3982)	35.190 (1.3854)
	EX.	35.285 – 35.315 (1.3892 – 1.3904)	34.990 (1.3776)
Camshaft journal oil clearance	IN. & EX.	0.020 – 0.054 (0.0008 – 0.0021)	0.150 (0.0059)
Camshaft journal holder I.D.	IN. & EX.	22.000 – 22.013 (0.8661 – 0.8667)	———
Camshaft journal O.D.	IN. & EX.	21.959 – 21.980 (0.8645 – 0.8654)	———
Camshaft runout	IN. & EX.	———	0.10 (0.004)
Cam chain 20 pitch length		———	157.8 (6.213)
Cam chain pin (at arrow "3")		20 th pin	———
Cylinder head distortion		———	0.2 (0.008)

CYLINDER + PISTON + PISTON RING

Unit: mm (in)

ITEM	STANDARD	LIMIT
Compression pressure	9.0 – 13.0 kg/cm² (128 – 185 psi)	7.0 kg/cm² (100 psi)
Compression pressure difference	———	2 kg/cm² (28 psi)
Piston to cylinder clearance	0.045 – 0.055 (0.0018 – 0.0022)	0.120 (0.0047)
Cylinder bore	56.000 – 56.015 (2.2047 – 2.2053)	56.085 (2.2081)
Piston diam.	55.950 – 55.965 (2.2028 – 2.2033) Measure at the 15 (0.59) from skirt end.	55.880 (2.2000)
Cylinder distortion	———	0.26 (0.008)

Unit: mm (in)

ITEM	STANDARD			LIMIT
Piston ring free end gap	1st	N	Approx. 6.5 (0.26)	5.2 (0.20)
		T	Approx. 6.5 (0.26)	5.2 (0.20)
	2nd	N	Approx. 6.5 (0.26)	5.2 (0.20)
		T	Approx. 6.5 (0.26)	5.2 (0.20)
Piston ring end gap	1st		0.1 – 0.3 (0.004 – 0.012)	0.70 (0.028)
	2nd		0.1 – 0.3 (0.004 – 0.012)	0.70 (0.028)
Piston ring to groove clearance	1st		———	0.180 (0.0071)
	2nd		———	0.150 (0.0059)
Piston ring groove width	1st		1.21 – 1.23 (0.0476 – 0.0484)	———
	2nd		1.21 – 1.23 (0.0476 – 0.0484)	———
	Oil		2.51 – 2.53 (0.0988 – 0.0996)	———
Piston ring thickness	1st		1.175 – 1.190 (0.0463 – 0.0469)	———
	2nd		1.170 – 1.190 (0.0461 – 0.0469)	———
Piston pin bore			16.002 – 16.008 (0.6300 – 0.6302)	16.030 (0.6311)
Piston pin O.D.			15.995 – 16.000 (0.6297 – 0.6300)	15.980 (0.6291)

CONROD + CRANKSHAFT

Unit: mm (in)

ITEM	STANDARD	LIMIT
Conrod small end I.D.	16.006 – 16.014 (0.6302 – 0.6305)	16.040 (0.6315)
Conrod deflection	———	3.0 (0.12)
Conrod big end side clearance	0.10 – 0.65 (0.004 – 0.026)	1.0 (0.039)
Crankshaft runout	———	0.10 (0.004)

OIL PUMP

ITEM	STANDARD	LIMIT
Oil pump reduction ratio	1.821 (87 / 44 x 35 / 38)	———
Oil pressure (at 60°C, 140°F)	Above 0.1 kg/cm² (1.42 psi) Below 0.3 kg/cm² (4.27 psi) at 3000 r/min.	———

CLUTCH

Unit: mm (in)

ITEM	STANDARD	LIMIT
Clutch cable play	2 – 3 (0.08 – 0.12)	———
Clutch release screw	¼ – ½ Turn back	———
Drive plate thickness	2.9 – 3.1 (0.114 – 0.122)	2.6 (0.10)
Drive plate claw width	11.8 – 12.0 (0.465 – 0.472)	11.0 (0.433)
Driven plate thickness	1.6 ± 0.06 (0.063 ± 0.002)	———
Driven plate distortion	———	0.1 (0.004)
Clutch spring free length	———	36.5 (1.44)

TRANSMISSION + DRIVE CHAIN

Unit: mm (in)

ITEM		STANDARD		LIMIT
Primary reduction ratio		1.977 (87 / 44)		———
Final reduction ratio		3.400 (51 / 15)		———
	E–28	3.266 (49 / 15)		———
Gear ratios		Low	2.666 (32 / 12)	———
		2nd	1.777 (32 / 18)	———
		3rd	1.380 (29 / 21)	———
		4th	1.173 (27 / 23)	———
		5th	1.045 (23 / 22)	———
		Top	0.956 (22 / 23)	———
Shift fork to groove clearance		0.1 – 0.3 (0.004 – 0.012)		0.5 (0.020)
Shift fork groove width		5.5 – 5.6 (0.217 – 0.220)		———
Shift fork thickness		5.3 – 5.4 (0.195 – 0.199)		———
Drive chain		Type	D.I.D.: 50HDL TAKASAGO: RK50SHO	———
		Links	110	———
	E–28	Links	108	———
		20 pitch length	———	320.0 (12.60)
Drive chain slack		20 – 30 (0.8 – 1.2)		———

CARBURETOR

Unit: mm (in)

ITEM	SPECIFICATION
Carburetor type	MIKUNI BS32SS, Four
Bore size	32
I. D. No.	47090
Idle r/min.	1100 ± 50 r/min.
Fuel level	5.0 ± 1.0 (0.20 ± 0.04)
Float height	22.4 ± 1.0 (0.88 ± 0.04)
Main jet (M. J.)	# 92.5
Main air jet (M. A. J.)	1.6
Jet needle (J. N.)	5F42-3rd
Needle jet (N. J.)	X–6
Throttle valve	# 135
Pilot jet (P. J.)	# 40
By pass (B. P.)	1.0, 0.8, 0.8
Pilot outlet (P. O.)	0.7
Valve seat (V. S.)	2.0
Starter jet (G. S.)	#35
Pilot screw (P. S.)	PRE–SET
Pilot air jet (P. A. J.)	# 120
Throttle cable play	0.5 – 1.0 (0.02 – 0.04)
Choke cable play	0.5 – 1.0 (0.02 – 0.04)

ELECTRICAL

Unit: mm (in)

ITEM		SPECIFICATION	
Ignition timing		15° B.T.D.C. Below 1500 ± 100 r/min and 40° B.T.D.C. Above 2350 ± 100 r/min.	
Firing order		1, 2, 4, 3	
Spark plug		Type	NGK B8ES or N.D. W24ES–U
		Gap	0.6 – 0.8 (0.024 – 0.031)
	E–6	Type	NGK BR8ES or N.D. W24ESR
		Gap	0.6 – 0.8 (0.024 – 0.031)
Spark performance		Over 8 (0.3) at 1 atm	
Signal coil resistance		Approx. 60 – 80 Ω	
Ignition coil resistance		Primary	O/W – W or B/Y Approx. 3 – 5 Ω
		Secondary	Plug cap – Plug cap Approx. 30 – 35 kΩ
Generator no-load voltage		More than 80 V (AC) at 5000 r/min.	
Regulated voltage		14.0 – 15.5 V at 5000 r/min.	
Starter motor		Brush length	N. D. / Limit 6 (0.24)
		Commutator under cut	Limit 0.2 (0.008)
Starter relay resistance		Approx. 3 – 4 Ω	
Battery		Type designation	YB10L –A2
		Capacity	12V 43.2kC (12Ah)/10HR
		Standard electrolyte S. G.	1.28 at 20°C (68°F)
Fuse size		Main	15 A
		Headlight	10 A
		Turn signal	10 A
		Ignition	10 A
		Power source	10 A

BRAKE + WHEEL

Unit: mm (in)

ITEM		STANDARD	LIMIT
Rear brake pedal height		20 (0.8)	—
Brake disc thickness	Front	5.0 ± 0.2 (0.20 ± 0.008)	4.5 (0.18)
	E–28	6.0 ± 0.2 (0.24 ± 0.008)	5.5 (0.22)
	Rear	6.7 ± 0.2 (0.26 ± 0.008)	6.0 (0.24)
Brake disc runout		—	0.30 (0.012)
Master cylinder bore	Front	15.870 – 15.913 (0.6248 – 0.6265)	—
	E–28	14.000 – 14.043 (0.5512 – 0.5529)	—
	Rear	14.000 – 14.043 (0.5512 – 0.5529)	—
Master cylinder piston diam.	Front	15.827 – 15.854 (0.6231 – 0.6242)	—
	E–28	13.941 – 13.968 (0.5489 – 0.5499)	—
	Rear	13.957 – 13.984 (0.5495 – 0.5506)	—
Brake caliper cylinder bore	Front	38.180 – 38.256 (1.5031 – 1.5061)	—
	E–28	42.860 – 42.899 (1.6874 – 1.6889)	—
	Rear	38.180 – 38.256 (1.5031 – 1.5061)	—
Brake caliper piston diam.	Front	38.098 – 38.148 (1.4999 – 1.5019)	—
	E–28	42.785 – 42.810 (1.6844 – 1.6854)	—
	Rear	38.098 – 38.148 (1.4999 – 1.5015)	—
Wheel rim runout	Axial	—	2.0 (0.08)
	Radial	—	2.0 (0.08)
Wheel axle runout	Front	—	0.25 (0.010)
	Rear	—	0.25 (0.010)

Unit: mm (in)

ITEM		STANDARD	LIMIT
Tire size	Front	3.25H19 4PR	——
	E–28	90/90 – 19 52H	——
	Rear	4.50H17 4PR	——
	E–28	130/90 – 16 67H	——
Tire tread depth	Front	——	1.6 (0.06)
	Rear	——	2.0 (0.08)

SUSPENSION

Unit: mm (in)

ITEM			STANDARD	LIMIT
Front fork stroke			160 (6.3)	——
Front fork spring free length		Short	——	152.4 (6.00)
		Long	——	373.4 (14.70)
	E–28	Short	——	159.1 (6.26)
		Long	——	448.7 (17.67)
Front fork oil level			219.6 (8.65)	——
	E–28		208 (8.19)	——
Rear wheel travel			100 (3.94)	——
	E–28		95 (3.74)	——
Swing arm pivot shaft runout			——	0.3 (0.012)

FUEL + OIL

ITEM		SPECIFICATION		
Fuel type		Use gasoline with an octane number of 85 –95 (Research Method), preferably unleaded or low-lead type.		
Fuel tank including reserve			12 L (3.2 / 2.6 US/Imp gal)	
	reserve		4.0 L (4.2 / 3.5 US/Imp qt)	
Engine oil type		SAE 10W/40		
Engine oil capacity		Change	2400 ml (2.5 / 2.1 US/Imp qt)	
		Filter change	2600 ml (2.7 / 2.3 US/Imp qt)	
		Overhaul	2700 ml (2.8 / 2.4 US/Imp qt)	
Front fork oil type		Fork oil #15 or SAE 10W/30 : A.T.F. = 1:1		
Front fork oil capacity (each leg)			196 ml (6.62 / 6.90 US/Imp oz)	
	E–28		249 ml (8.42 / 8.77 US/Imp oz)	
Brake fluid type		SAE J1703, DOT3 or DOT4		

TIRE PRESSURE

COLD INFLATION TIRE PRESSURE	NORMAL RIDING						CONTINUOUS HIGH SPEED RIDING					
	SOLO RIDING			DUAL RIDING			SOLO RIDING			DUAL RIDING		
	kPa	kg/cm²	psi	kPa	kg/cm²	psi	kPa	kg/cm²	psi	kPa	kg/cm²	psi
FRONT	175	1.75	25	175	1.75	25	200	2.00	28	200	2.00	28
REAR	200	2.00	28	225	2.25	32	225	2.25	32	280	2.80	40

E–28

COLD INFLATION TIRE PRESSURE	NORMAL RIDING						CONTINUOUS HIGH SPEED RIDING					
	SOLO RIDING			DUAL RIDING			SOLO RIDING			DUAL RIDING		
	kPa	kg/cm²	psi	kPa	kg/cm²	psi	kPa	kg/cm²	psi	kPa	kg/cm²	psi
FRONT	200	2.00	28	225	2.25	32	200	2.00	28	250	2.50	36
REAR	200	2.00	28	225	2.25	32	225	2.25	32	280	2.80	40

WATTAGE

(W)

ITEM		SPECIFICATION	
		E–01, 06, 24, 28, and 30	The others
Headlight	HI	60	←
	LO	55	←
Parking or city light			4
Tail/Brake light		8/23	5/21
Turn signal light		23	21
Speedometer light		3.4	←
Tachometer light		3.4	←
Turn signal indicator light		3.4	←
High beam indicator light		3.4	←
Neutral indicator light		3.4	←
Oil pressure indicator light		3.4	←
Fuel meter light		3.4	←
Gear position indicator light		1.4	←

GS550T

VALVE + GUIDE

Model: GS550T
Unit: mm (in)

ITEM		STANDARD	LIMIT
Valve diam.	IN.	32.0 (1.26)	———
	EX.	27.0 (1.06)	———
Valve lift	IN.	7.2 (0.283)	———
	EX.	7.0 (0.276)	———
Tappet clearance (when cold)	IN. & EX.	0.03 – 0.08 (0.001 – 0.003)	———
Valve guide to valve stem clearance	IN.	0.020 – 0.050 (0.0008 – 0.0020)	0.35 (0.014)
	EX.	0.030 – 0.060 (0.0012 – 0.0024)	0.35 (0.014)
Valve guide I.D.	IN. & EX.	7.000 – 7.015 (0.2756 – 0.2762)	———
Valve stem O.D.	IN.	6.965 – 6.980 (0.2742 – 0.2748)	———
	EX.	6.955 – 6.970 (0.2738 – 0.2744)	———
Valve stem runout	IN. & EX.	———	0.05 (0.002)
Valve head thickness	IN. & EX.	———	0.5 (0.02)
Valve stem end length	IN. & EX.	———	4.0 (0.16)
Valve seat width	IN. & EX.	0.9 – 1.1 (0.035 – 0.043)	———
Valve head radial runout	IN. & EX.	———	0.03 (0.001)
Valve spring free length (IN. & EX.)	INNER	———	33.9 (1.33)
	OUTER	———	41.3 (1.63)
Valve spring tension (IN. & EX.)	INNER	8.9 – 12.5 kg (19.6 – 27.6 lbs) at length 31 mm (1.2 in)	———
	OUTER	22.1 – 27.1 kg (48.7 – 59.7 lbs) at length 35 mm (1.4 in)	———

CAMSHAFT + CYLINDER HEAD

Unit: mm (in)

ITEM	STANDARD		LIMIT
Cam height	IN.	35.485 – 35.515 (1.3970 – 1.3982)	35.190 (1.3854)
	EX.	35.285 – 35.315 (1.3892 – 1.3904)	34.990 (1.3776)
Camshaft journal oil clearance	IN. & EX.	0.020 – 0.054 (0.0008 – 0.0021)	0.150 (0.0059)
Camshaft journal holder I.D.	IN. & EX.	22.000 – 22.013 (0.8661 – 0.8667)	———
Camshaft journal O.D.	IN. & EX.	21.959 – 21.980 (0.8645 – 0.8654)	———
Camshaft runout	IN. & EX.	———	0.10 (0.004)
Cam chain 20 pitch length		———	157.8 (6.213)
Cam chain pin (at arrow "3")		20 th pin	———
Cylinder head distortion		———	0.2 (0.008)

CYLINDER + PISTON + PISTON RING

Unit: mm (in)

ITEM	STANDARD	LIMIT
Compression pressure	9.0 – 13.0 kg/cm² (128 – 185 psi)	7.0 kg/cm² (100 psi)
Compression pressure difference	———	2 kg/cm² (28 psi)
Piston to cylinder clearance	0.045 – 0.055 (0.0018 – 0.0022)	0.120 (0.0047)
Cylinder bore	56.000 – 56.015 (2.2047 – 2.2053)	56.085 (2.2081)
Piston diam.	55.950 – 55.965 (2.2028 – 2.2033) Measure at the 15 (0.59) from skirt end.	55.880 (2.2000)
Cylinder distortion	———	0.26 (0.008)

Unit: mm (in)

ITEM	STANDARD			LIMIT
Piston ring free end gap	1st	N	Approx. 6.5 (0.26)	5.2 (0.20)
		T	Approx. 6.5 (0.26)	5.2 (0.20)
	2nd	N	Approx. 6.5 (0.26)	5.2 (0.20)
		T	Approx. 6.5 (0.26)	5.2 (0.20)
Piston ring end gap	1st		0.1 – 0.3 (0.004 – 0.012)	0.70 (0.028)
	2nd		0.1 – 0.3 (0.004 – 0.012)	0.70 (0.028)
Piston ring to groove clearance	1st		———	0.180 (0.0071)
	2nd		———	0.150 (0.0059)
Piston ring groove width	1st		1.21 – 1.23 (0.0476 – 0.0484)	———
	2nd		1.21 – 1.23 (0.0476 – 0.0484)	———
	Oil		2.51 – 2.53 (0.0988 – 0.0996)	———
Piston ring thickness	1st		1.175 – 1.190 (0.0463 – 0.0469)	———
	2nd		1.170 – 1.190 (0.0461 – 0.0469)	———
Piston pin bore			16.002 – 16.008 (0.6300 – 0.6302)	16.030 (0.6311)
Piston pin O.D.			15.995 – 16.000 (0.6297 – 0.6300)	15.980 (0.6291)

CONROD + CRANKSHAFT

Unit: mm (in)

ITEM	STANDARD	LIMIT
Conrod small end I.D.	16.006 – 16.014 (0.6302 – 0.6305)	16.040 (0.6315)
Conrod deflection	———	3.0 (0.12)
Conrod big end side clearance	0.10 – 0.65 (0.004 – 0.026)	1.0 (0.039)
Crankshaft runout	———	0.10 (0.004)

OIL PUMP

ITEM	STANDARD	LIMIT
Oil pump reduction ratio	1.821 (87 / 44 x 35 / 38)	———
Oil pressure (at 60°C, 140°F)	Above 0.1 kg/cm² (1.42 psi) Below 0.3 kg/cm² (4.27 psi) at 3000 r/min.	———

CLUTCH

Unit: mm (in)

ITEM	STANDARD	LIMIT
Clutch cable play	2 – 3 (0.08 – 0.12)	———
Clutch release screw	¼ – ½ Turn back	———
Drive plate thickness	2.9 – 3.1 (0.114 – 0.122)	2.6 (0.10)
Drive plate claw width	11.8 – 12.0 (0.465 – 0.472)	11.0 (0.433)
Driven plate thickness	1.6 ± 0.06 (0.063 ± 0.002)	———
Driven plate distortion	———	0.1 (0.004)
Clutch spring free length	———	36.5 (1.44)

TRANSMISSION + DRIVE CHAIN

Unit: mm (in)

ITEM	STANDARD		LIMIT
Primary reduction ratio	1.977 (87 / 44)		———
Final reduction ratio	3.333 (50 / 15)		———
Gear ratios	Low	.2.666 (32 / 12)	———
	2nd	1.777 (32 / 18)	———
	3rd	1.380 (29 / 21)	———
	4th	1.173 (27 / 23)	———
	5th	1.045 (23 / 22)	———
	Top	0.956 (22 / 23)	———
Shift fork to groove clearance	0.1 – 0.3 (0.004 – 0.012)		0.5 (0.020)
Shift fork groove width	5.5 – 5.6 (0.217 – 0.220)		———
Shift fork thickness	5.3 – 5.4 (0.195 – 0.199)		———
Drive chain	Type	D.I.D.: 50HDL TAKASAGO: RK50SHO	———
	Links	110	———
	20 pitch length	———	320.0 (12.60)
Drive chain slack	20 – 30 (0.8 – 1.2)		———

CARBURETOR

Unit: mm (in)

ITEM	SPECIFICATION
Carburetor type	MIKUNI BS32SS, Four
Bore size	32
I. D. No.	47090
Idle r/min.	1100 ± 50 r/min.
Fuel level	5.0 ± 1.0 (0.20 ± 0.04)
Float height	22.4 ± 1.0 (0.88 ± 0.04)
Main jet (M. J.)	# 92.5
Main air jet (M. A. J.)	1.6
Jet needle (J. N.)	5F42–3rd
Needle jet (N. J.)	X–6
Throttle valve	# 135
Pilot jet (P. J.)	# 40
By pass (B. P.)	1.0, 0.8, 0.8
Pilot outlet (P. O.)	0.7
Valve seat (V. S.)	2.0
Starter jet (G. S.)	#35
Pilot screw (P. S.)	PRE–SET
Pilot air jet (P. A. J.)	# 120
Throttle cable play	0.5 – 1.0 (0.02 – 0.04)
Choke cable play	0.5 – 1.0 (0.02 – 0.04)

ELECTRICAL

Unit: mm (in)

ITEM			SPECIFICATION
Ignition timing			15° B.T.D.C. Below 1500 ± 100 r/min and 40° B.T.D.C. Above 2350 ± 100 r/min.
Firing order			1, 2, 4, 3
Spark plug		Type	NGK B8ES or N.D.W24ES–U
		Gap	0.6 – 0.8 (0.024 – 0.031)
	E–06	Type	NGK BR8ES or N.D.W24ESR
	E–06	Gap	0.6 – 0.8 (0.024 – 0.031)
Spark performance			Over 8 (0.3) at 1 atm
Signal coil resistance			Approx. 60 – 80 Ω
Ignition coil resistance		Primary	O/W – W or B/Y Approx. 3 – 5 Ω
		Secondary	Plug cap – Plug cap Approx. 30 – 35 kΩ
Generator no-load voltage			More than 80 V (AC) at 5000 r/min.
Regulated voltage			14.0 – 15.5 V at 5000 r/min.
Starter motor		Brush length	N. D. / Limit 6 (0.24)
		Commutator under cut	Limit 0.2 (0.008)
Starter relay resistance			Approx. 3 – 4 Ω
Battery		Type designation	YB10L –A2
		Capacity	12V 43.2kC (12Ah)/10HR
		Standard electrolyte S. G.	1.28 at 20°C (68°F)
Fuse size		Main	15 A
		Headlight	10 A
		Turn signal	10 A
		Ignition	10 A
		Power source	10 A

BRAKE + WHEEL

Unit: mm (in)

ITEM		STANDARD	LIMIT
Rear brake pedal height		20 (0.8)	—
Brake disc thickness	Front	5.0 ± 0.2 (0.20 ± 0.008)	4.5 (0.18)
	E-28	6.0 ± 0.2 (0.24 ± 0.008)	5.5 (0.22)
	Rear	6.7 ± 0.2 (0.26 ± 0.008)	6.0 (0.24)
Brake disc runout		—	0.30 (0.012)
Master cylinder bore	Front	15.870 – 15.913 (0.6248 – 0.6265)	—
	E-28	14.000 – 14.043 (0.5512 – 0.5529)	—
	Rear	14.000 – 14.043 (0.5512 – 0.5529)	—
Master cylinder piston diam.	Front	15.827 – 15.854 (0.6231 – 0.6242)	—
	E-28	13.941 – 13.968 (0.5489 – 0.5499)	—
	Rear	13.957 – 13.984 (0.5495 – 0.5506)	—
Brake caliper cylinder bore	Front	38.180 – 38.256 (1.5031 – 1.5061)	—
	E-28	42.860 – 42.899 (1.6874 – 1.6889)	—
	Rear	38.180 – 38.256 (1.5031 – 1.5061)	—
Brake caliper piston diam.	Front	38.098 – 38.148 (1.4999 – 1.5019)	—
	E-28	42.785 – 42.810 (1.6844 – 1.6854)	—
	Rear	38.098 – 38.148 (1.4999 – 1.5019)	—
Wheel rim runout	Axial	—	2.0 (0.08)
	Radial	—	2.0 (0.08)
Wheel axle runout	Front	—	0.25 (0.010)
	Rear	—	0.25 (0.010)

Unit: mm (in)

ITEM	STANDARD		LIMIT
Tire size	Front	3.25H19 4PR	——
	Rear	4.25H17 4PR	——
Tire tread depth	Front	——	1.6 (0.06)
	Rear	——	2.0 (0.08)

SUSPENSION

Unit: mm (in)

ITEM	STANDARD		LIMIT
Front fork stroke	150 (5.9)		——
Front fork spring free length	Short	——	92.9 (3.66)
	Long	——	396.4 (15.61)
Front fork oil level	201 (7.91)		——
Rear wheel travel	100 (3.94)		——
Swing arm pivot shaft runout	——		0.3 (0.012)

FUEL + OIL

ITEM		SPECIFICATION
Fuel type		Use gasoline with an octane number of 85 – 95 (Research Method), Preferably unleaded or low-lead type
Fuel tank including reserve		12 L (3.2 / 2.6 US/Imp gal)
	reserve	4.0 L (4.2 / 3.5 US/Imp qt)
Engine oil type		SAE 10W/40
Engine oil capacity	Change	2400 ml (2.5 / 2.1 US/Imp qt)
	Filter change	2600 ml (2.7 / 2.3 US/Imp qt)
	Overhaul	2700 ml (2.8 / 2.4 US/Imp qt)
Front fork oil type		Fork oil #15 or SAE 10W/30 : A.T.F = 1:1
Front fork oil capacity (each leg)		190 ml (6.42 / 6.69 US/Imp oz)
Brake fluid type		SAE J1703, DOT3, or DOT4

TIRE PRESSURE

COLD INFLATION TIRE PRESSURE	NORMAL RIDING						CONTINUOUS HIGH SPEED RIDING					
	SOLO RIDING			DUAL RIDING			SOLO RIDING			DUAL RIDING		
	kPa	kg/cm²	psi	kPa	kg/cm²	psi	kPa	kg/cm²	psi	kPa	kg/cm²	psi
FRONT	175	1.75	25	175	1.75	25	200	2.00	28	200	2.00	28
REAR	200	2.00	28	250	2.50	36	225	2.25	32	280	2.80	40

WATTAGE

(W)

ITEM		SPECIFICATION	
		E01, 06, 24, 28 and 30	The others
Headlight	HI	60	←
	LO	55	←
Parking or city light			4
Tail/Brake light		8/23	5/21
Turn signal light		23	21
Speedometer light		3.4	←
Tachometer light		3.4	←
Turn signal indicator light		3.4	←
High beam indicator light		3.4	←
Neutral indicator light		3.4	←
Oil pressure indicator light		3.4	←
Gear position indicator light		1.4	←

GS550M

VALVE + GUIDE

Model: GS550M
Unit: mm (in)

ITEM		STANDARD	LIMIT
Valve diam.	IN.	32.0 (1.26)	———
	EX.	27.0 (1.06)	———
Valve lift	IN.	7.2 (0.283)	———
	EX.	7.0 (0.276)	———
Tappet clearance (when cold)	IN. & EX.	0.03 – 0.08 (0.001 – 0.003)	———
Valve guide to valve stem clearance	IN.	0.020 – 0.050 (0.0008 – 0.0020)	0.35 (0.014)
	EX.	0.030 – 0.060 (0.0012 – 0.0024)	0.35 (0.014)
Valve guide I.D.	IN. & EX.	7.000 – 7.015 (0.2756 – 0.2762)	———
Valve stem O.D.	IN.	6.965 – 6.980 (0.2742 – 0.2748)	———
	EX.	6.955 – 6.970 (0.2738 – 0.2744)	———
Valve stem runout	IN. & EX.	———	0.05 (0.002)
Valve head thickness	IN. & EX.	———	0.5 (0.02)
Valve stem end length	IN. & EX.	———	4.0 (0.16)
Valve seat width	IN. & EX.	0.9 – 1.1 (0.035 – 0.043)	———
Valve head radial runout	IN. & EX.	———	0.03 (0.001)
Valve spring free length (IN. & EX.)	INNER	———	33.9 (1.33)
	OUTER	———	41.3 (1.63)
Valve spring tension (IN. & EX.)	INNER	8.9 – 12.5 kg (19.6 – 27.6 lbs) at length 31 mm (1.2 in)	———
	OUTER	22.1 – 27.1 kg (48.7 – 59.7 lbs) at length 35 mm (1.4 in)	———

CAMSHAFT + CYLINDER HEAD

Unit: mm (in)

ITEM	STANDARD		LIMIT
Cam height	IN.	35.485 – 35.515 (1.3970 – 1.3982)	35.190 (1.3854)
	EX.	35.285 – 35.315 (1.3892 – 1.3904)	34.990 (1.3776)
Camshaft journal oil clearance	IN. & EX.	0.020 – 0.054 (0.0008 – 0.0021)	0.150 (0.0059)
Camshaft journal holder I.D.	IN. & EX.	22.000 – 22.013 (0.8661 – 0.8667)	———
Camshaft journal O.D.	IN. & EX.	21.959 – 21.980 (0.8645 – 0.8654)	———
Camshaft runout	IN. & EX.	———	0.10 (0.004)
Cam chain 20 pitch length		———	157.8 (6.213)
Cam chain pin (at arrow "3")		20 th pin	———
Cylinder head distortion		———	0.2 (0.008)

CYLINDER + PISTON + PISTON RING

Unit: mm (in)

ITEM	STANDARD	LIMIT
Compression pressure	9.0 – 13.0 kg/cm² (128 – 185 psi)	7.0 kg/cm² (100 psi)
Compression pressure difference	———	2 kg/cm² (28 psi)
Piston to cylinder clearance	0.045 – 0.055 (0.0018 – 0.0022)	0.120 (0.0047)
Cylinder bore	56.000 – 56.015 (2.2047 – 2.2053)	56.085 (2.2081)
Piston diam.	55.950 – 55.965 (2.2028 – 2.2033) Measure at the 15 (0.59) from skirt end.	55.880 (2.2000)
Cylinder distortion	———	0.26 (0.008)

Unit: mm (in)

ITEM	STANDARD			LIMIT
Piston ring free end gap	1st	N	Approx. 6.5 (0.26)	5.2 (0.20)
		T	Approx. 6.5 (0.26)	5.2 (0.20)
	2nd	N	Approx. 6.5 (0.26)	5.2 (0.20)
		T	Approx. 6.5 (0.26)	5.2 (0.20)
Piston ring end gap	1st		0.1 – 0.3 (0.004 – 0.012)	0.70 (0.028)
	2nd		0.1 – 0.3 (0.004 – 0.012)	0.70 (0.028)
Piston ring to groove clearance	1st		———	0.180 (0.0071)
	2nd		———	0.150 (0.0059)
Piston ring groove width	1st		1.21 – 1.23 (0.0476 – 0.0484)	———
	2nd		1.21 – 1.23 (0.0476 – 0.0484)	———
	Oil		2.51 – 2.53 (0.0988 – 0.0996)	———
Piston ring thickness	1st		1.175 – 1.190 (0.0463 – 0.0469)	———
	2nd		1.170 – 1.190 (0.0461 – 0.0469)	———
Piston pin bore			16.002 – 16.008 (0.6300 – 0.6302)	16.030 (0.6311)
Piston pin O.D.			15.995 – 16.000 (0.6297 – 0.6300)	15.980 (0.6291)

CONROD + CRANKSHAFT

Unit: mm (in)

ITEM	STANDARD	LIMIT
Conrod small end I.D.	16.006 – 16.014 (0.6302 – 0.6305)	16.040 (0.6315)
Conrod deflection	———	3.0 (0.12)
Conrod big end side clearance	0.10 – 0.65 (0.004 – 0.026)	1.0 (0.039)
Crankshaft runout	———	0.10 (0.004)

OIL PUMP

ITEM	STANDARD	LIMIT
Oil pump reduction ratio	1.821 (87 / 44 x 35 / 38)	———
Oil pressure (at 60°C, 140°F)	Above 0.1 kg/cm² (1.42 psi) Below 0.3 kg/cm² (4.27 psi) at 3000 r/min.	———

CLUTCH

Unit: mm (in)

ITEM	STANDARD	LIMIT
Clutch cable play	2 – 3 (0.08 – 0.12)	———
Clutch release screw	¼ – ½ Turn back	———
Drive plate thickness	2.9 – 3.1 (0.114 – 0.122)	2.6 (0.10)
Drive plate claw width	11.8 – 12.0 (0.465 – 0.472)	11.0 (0.433)
Driven plate thickness	1.6 ± 0.06 (0.063 ± 0.002)	———
Driven plate distortion	———	0.1 (0.004)
Clutch spring free length	———	36.5 (1.44)

TRANSMISSION + DRIVE CHAIN

Unit: mm (in)

ITEM		STANDARD		LIMIT
Primary reduction ratio		1.977 (87 / 44)		———
Final reduction ratio		3.333 (50 / 15)		———
	E–22	3.400 (51 / 15)		
Gear ratios		Low	2.666 (32 / 12)	———
		2nd	1.777 (32 / 18)	———
		3rd	1.380 (29 / 21)	———
		4th	1.173 (27 / 23)	———
		5th	1.045 (23 / 22)	———
		Top	0.956 (22 / 23)	———
Shift fork to groove clearance		0.1 – 0.3 (0.004 – 0.012)		0.5 (0.020)
Shift fork groove width		5.5 – 5.6 (0.217 – 0.220)		———
Shift fork thickness		5.3 – 5.4 (0.195 – 0.199)		———
Drive chain		Type	D.I.D.: 50HDL TAKASAGO: RK50SHO	———
		Links	112	———
		20 pitch length	———	320.0 (12.60)
Drive chain slack		20 – 30 (0.8 – 1.2)		———

CARBURETOR

Unit: mm (in)

ITEM	SPECIFICATION
Carburetor type	MIKUNI BS32SS, Four
Bore size	32
I. D. No.	47090
Idle r/min.	1100 ± 50 r/min.
Fuel level	5.0 ± 1.0 (0.20 ± 0.04)
Float height	22.4 ± 1.0 (0.88 ± 0.04)
Main jet (M. J.)	# 92.5
Main air jet (M. A. J.)	1.6
Jet needle (J. N.)	5F42–3rd
Needle jet (N. J.)	X–6
Throttle valve	# 135
Pilot jet (P. J.)	# 40
By pass (B. P.)	1.0, 0.8, 0.8
Pilot outlet (P. O.)	0.7
Valve seat (V. S.)	2.0
Starter jet (G. S.)	#35
Pilot screw (P. S.)	PRE–SET
Pilot air jet (P. A. J.)	# 120
Throttle cable play	0.5 – 1.0 (0.02 – 0.04)
Choke cable play	0.5 – 1.0 (0.02 – 0.04)

ELECTRICAL

Unit: mm (in)

ITEM	SPECIFICATION		
Ignition timing	15° B.T.D.C. Below 1500 ± 100 r/min and 40° B.T.D.C. Above 2350 ± 100 r/min.		
Firing order	1, 2, 4, 3		
Spark plug	Type	NGK B8ES or N.D. W24ES–U	
	Gap	0.6 – 0.8 (0.024 – 0.031)	
Spark performance	Over 8 (0.3) at 1 atm		
Signal coil resistance	Approx. 60 – 80 Ω		
Ignition coil resistance	Primary	O/W – W or B/Y Approx. 3 – 5 Ω	
	Secondary	Plug cap – Plug cap Approx. 30 – 35 kΩ	
Generator no-load voltage	More than 80 V (AC) at 5000 r/min.		
Regulated voltage	14.0 – 15.5 V at 5000 r/min.		
Starter motor	Brush length	N. D.	Limit: 6 (0.24)
	Commutator under cut		Limit: 0.2 (0.008)
Starter relay resistance	Approx. 3 – 4 Ω		
Battery	Type designation	YB10L –A2	
	Capacity	12V 43.2kC (12Ah)/10HR	
	Standard electrolyte S. G.	1.28 at 20°C (68°F)	
Fuse size	Main	15 A	
	Headlight	10 A	
	Turn signal	10 A	
	Ignition	10 A	
	Power source	10 A	

BRAKE + WHEEL

Unit: mm (in)

ITEM		STANDARD	LIMIT
Rear brake pedal height		40 (1.6)	—
Brake disc thickness	Front	5.0 ± 0.2 (0.20 ± 0.008)	4.5 (0.18)
	Rear	6.7 ± 0.2 (0.26 ± 0.008)	6.0 (0.24)
Brake disc runout		—	0.30 (0.012)
Master cylinder bore	Front	15.870 – 15.913 (0.6248 – 0.6265)	—
	Rear	14.000 – 14.043 (0.5512 – 0.5529)	—
Master cylinder piston diam.	Front	15.827 – 15.854 (0.6231 – 0.6242)	—
	Rear	13.957 – 13.984 (0.5495 – 0.5506)	—
Brake caliper cylinder bore	Front	38.180 – 38.256 (1.5031 – 1.5061)	—
	Rear	38.180 – 38.256 (1.5031 – 1.5061)	—
Brake caliper piston diam.	Front	38.098 – 38.148 (1.4999 – 1.5019)	—
	Rear	38.098 – 38.148 (1.4999 – 1.5019)	—
Wheel rim runout	Axial	—	2.0 (0.08)
	Radial	—	2.0 (0.08)
Wheel axle runout	Front	—	0.25 (0.010)
	Rear	—	0.25 (0.010)
Tire size	Front	3.25H19 4PR	—
	Rear	3.75H18 4PR	—
E–22		4.00H18 4PR	
Tire tread depth	Front	—	1.6 (0.06)
	Rear	—	2.0 (0.08)

SUSPENSION

Unit: mm (in)

ITEM		STANDARD	LIMIT
Front fork stroke		150 (5.9)	———
Front fork spring free length	Short	———	57.1 (2.25)
	Long	———	423.2 (16.66)
Front fork oil level		194 (7.64)	———
Rear wheel travel		105 (4.13)	———
Swing arm pivot shaft runout		———	0.3 (0.012)

FUEL + OIL

ITEM		SPECIFICATION
Fuel type		Use gasoline with an octane number of 85 – 95 (Research Method), Preferably unleaded or low-lead type
Fuel tank including reserve		23 L (6.1 / 5.1 US/Imp gal)
reserve		4.0 L (4.2 / 3.5 US/Imp qt)
Engine oil type		SAE 10W/40
Engine oil capacity	Change	2400 ml (2.5 / 2.1 US/Imp qt)
	Filter change	2600 ml (2.7 / 2.3 US/Imp qt)
	Overhaul	2700 ml (2.8 / 2.4 US/Imp qt)
Front fork oil type		Fork oil #15 or SAE 10W/30 : A.T.F. = 1:1
Front fork oil capacity (each leg)		195 ml (6.59 / 6.87 US/Imp oz)
Brake fluid type		SAE J1703, DOT3, or DOT4

TIRE PRESSURE

COLD INFLATION TIRE PRESSURE	NORMAL RIDING						CONTINUOUS HIGH SPEED RIDING					
	SOLO RIDING			DUAL RIDING			SOLO RIDING			DUAL RIDING		
	kPa	kg/cm²	psi	kPa	kg/cm²	psi	kPa	kg/cm²	psi	kPa	kg/cm²	psi
FRONT	175	1.75	25	175	1.75	25	200	2.00	28	200	2.00	28
REAR	200	2.00	28	250	2.50	36	225	2.25	32	280	2.80	40

WATTAGE

(W)

ITEM		SPECIFICATION		
		E2, 4, 34	E–22	E–24
Headlight	HI	60	←	←
	LO	55	←	←
Parking or city light		3.4	←	
Tail/Brake light		5/21	←	←
Turn signal light		21	←	←
Speedometer light		3.4	←	←
Tachometer light		3.4	←	←
Turn signal indicator light		3.4	←	←
High beam indicator light		3.4	←	←
Neutral indicator light		3.4	←	←
Oil pressure indicator light		3.4	←	←
License light		5	10	8
Gear position indicator light		1.4	←	←

GS550"X" E-01, 06

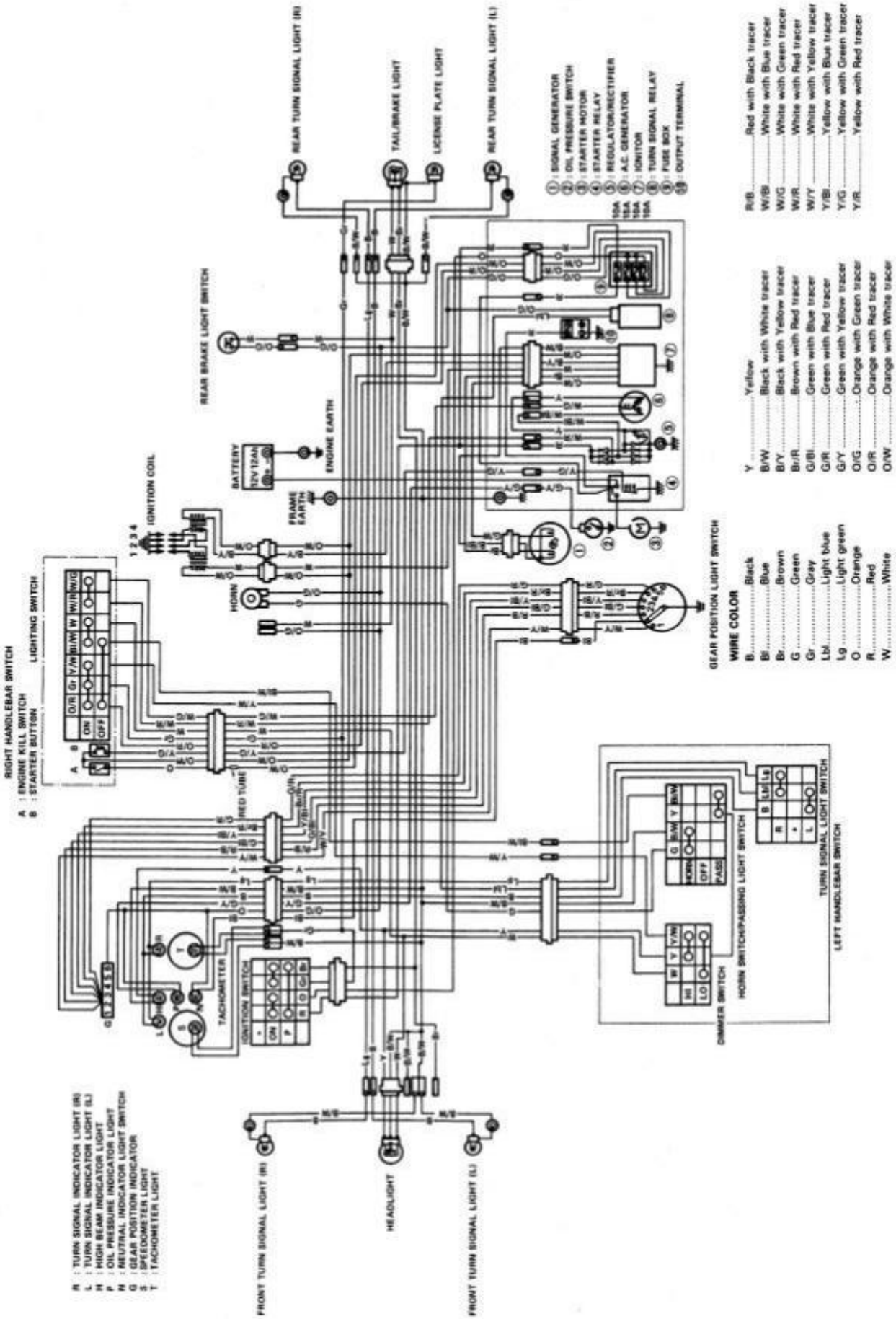

GS550"X", GS550M"X" E-02

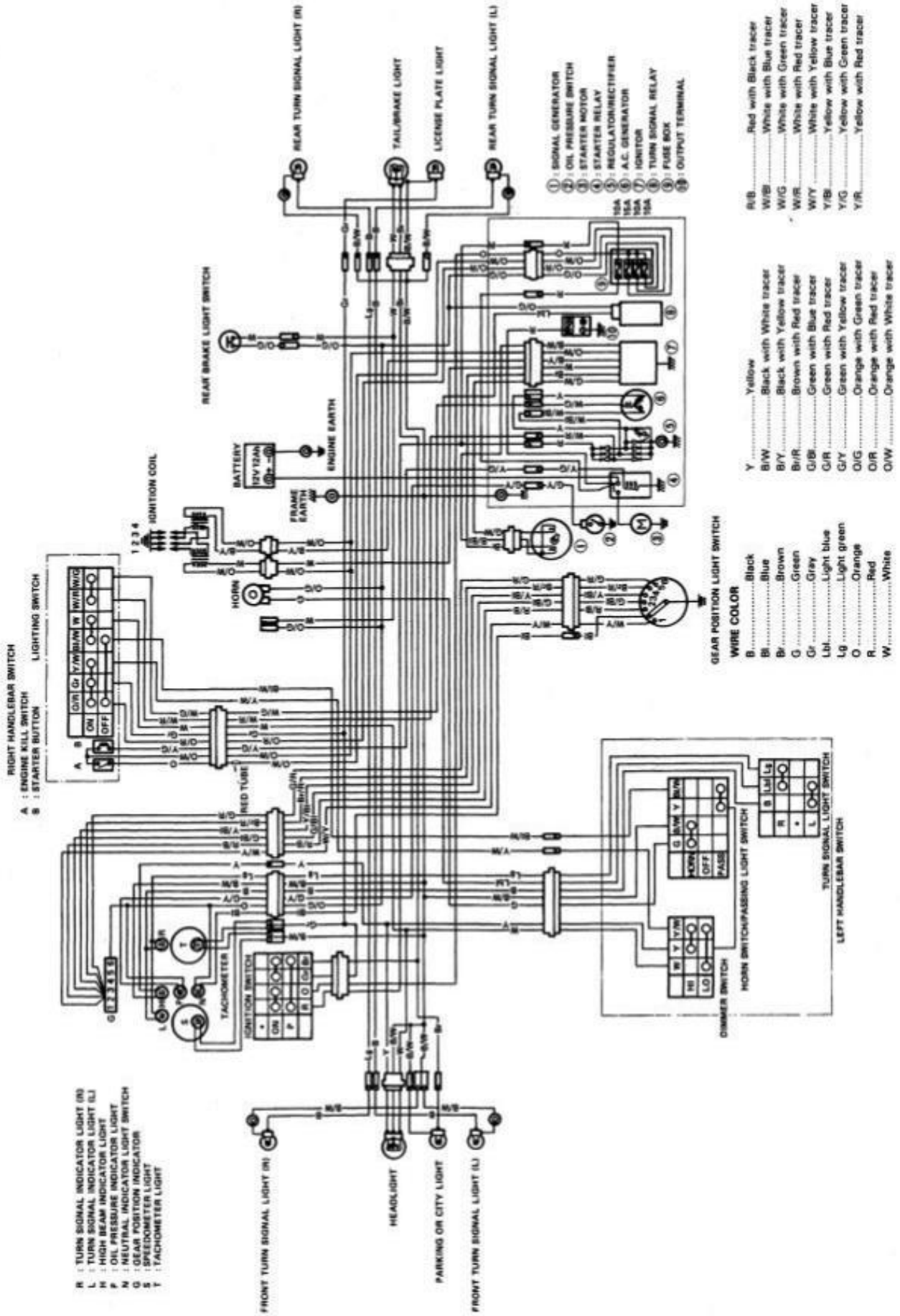

GS500"X", GS550M"X" E-04, 39
GS550"X" E-04, 18, 26 GS550M"X" E-04

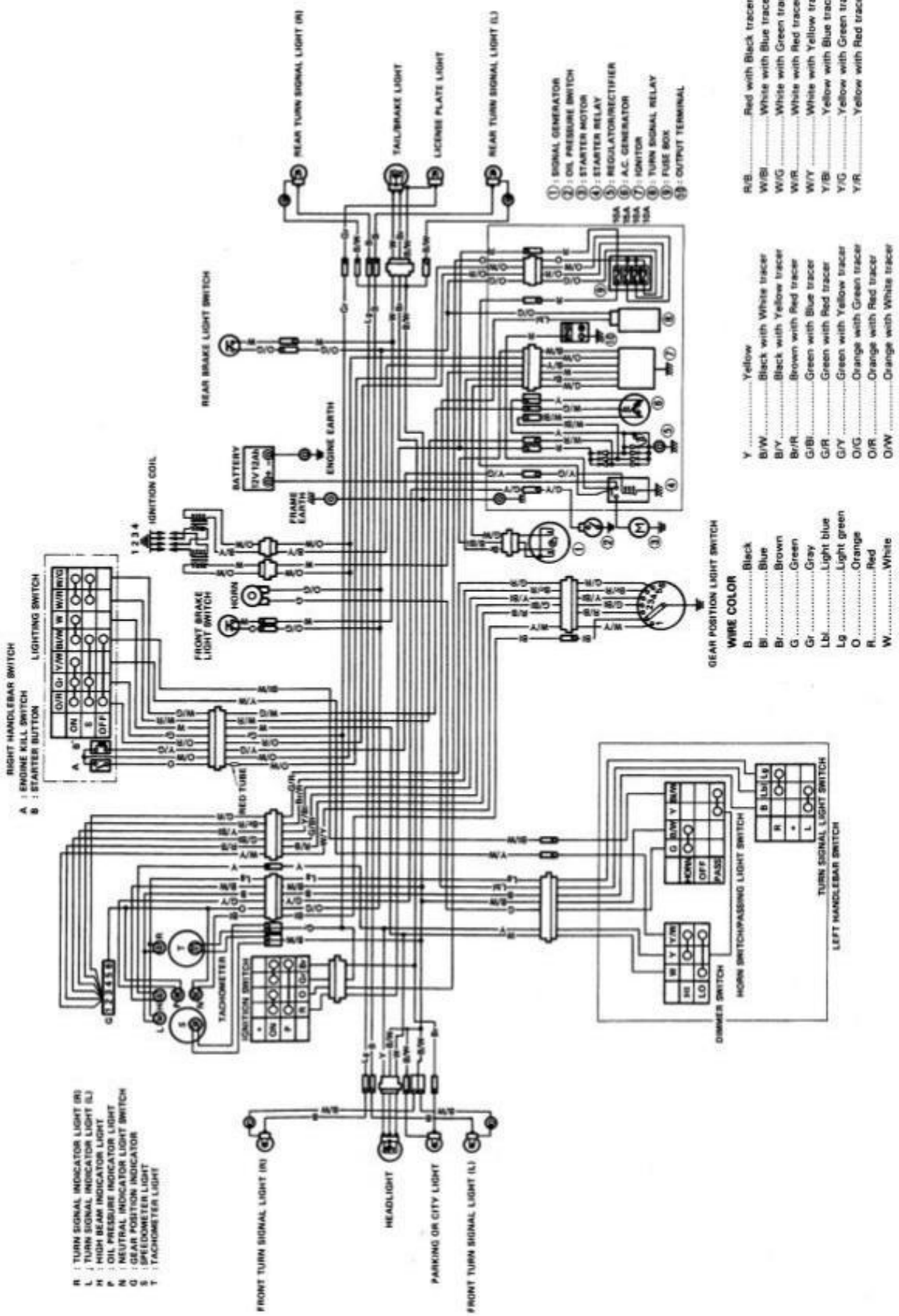

GS500"X" E-15, 17 GS500M"X" E-15, 17, 21 GS550"X" E-21

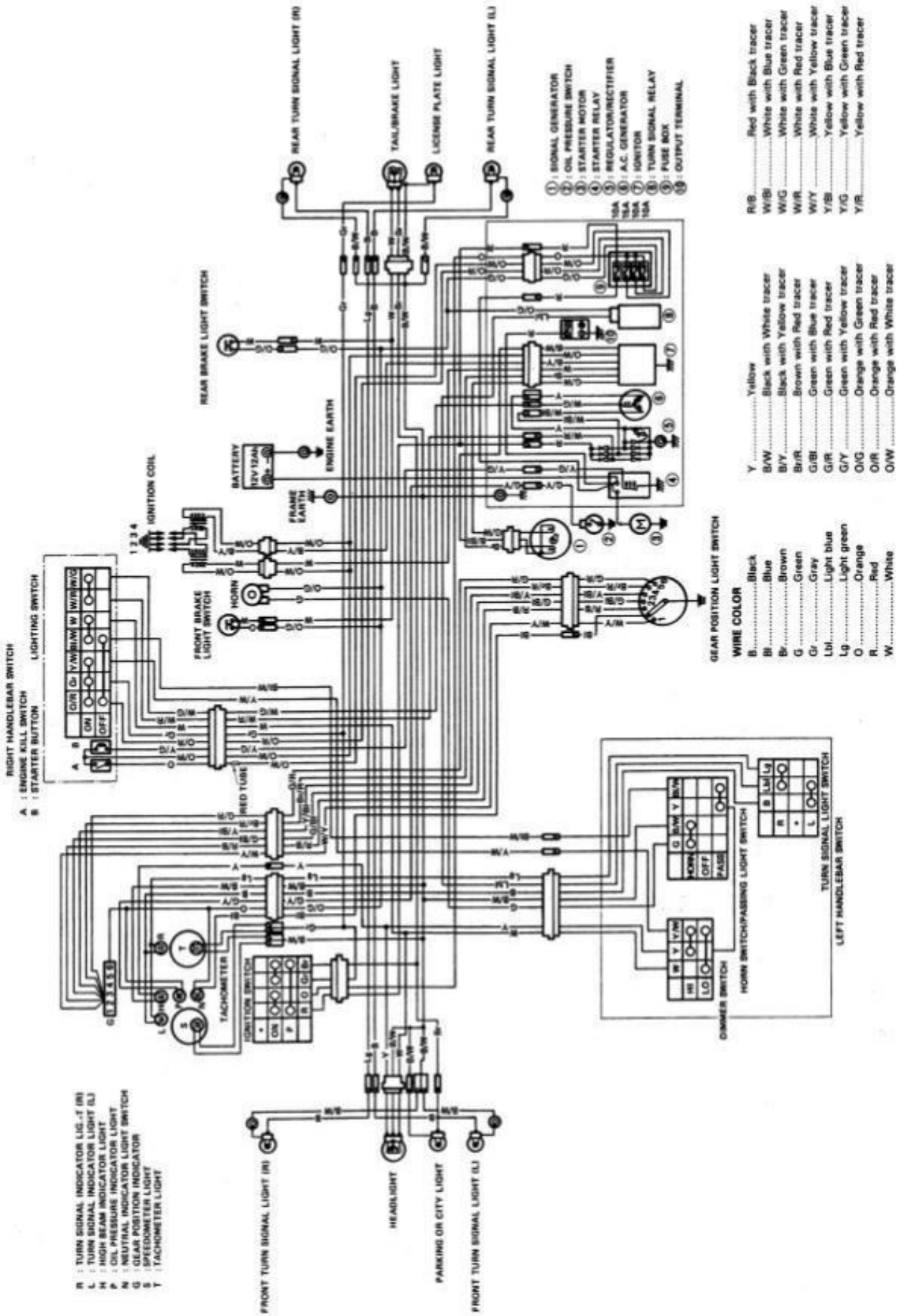

GS500"X", GS550M"X" E-22 GS550"X" E-22, 25

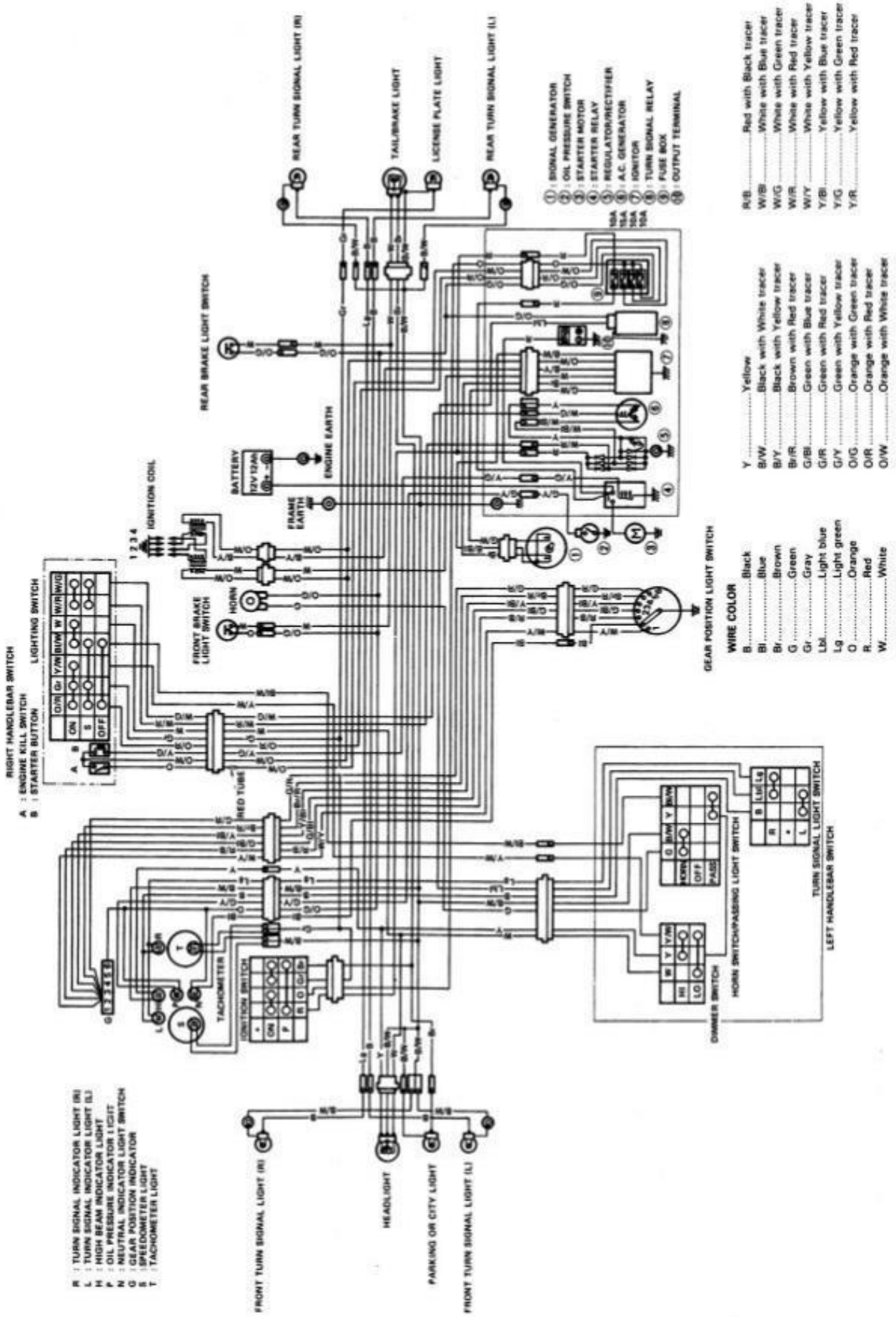

GS550"X" E-24,30 GS550M"X" E-24

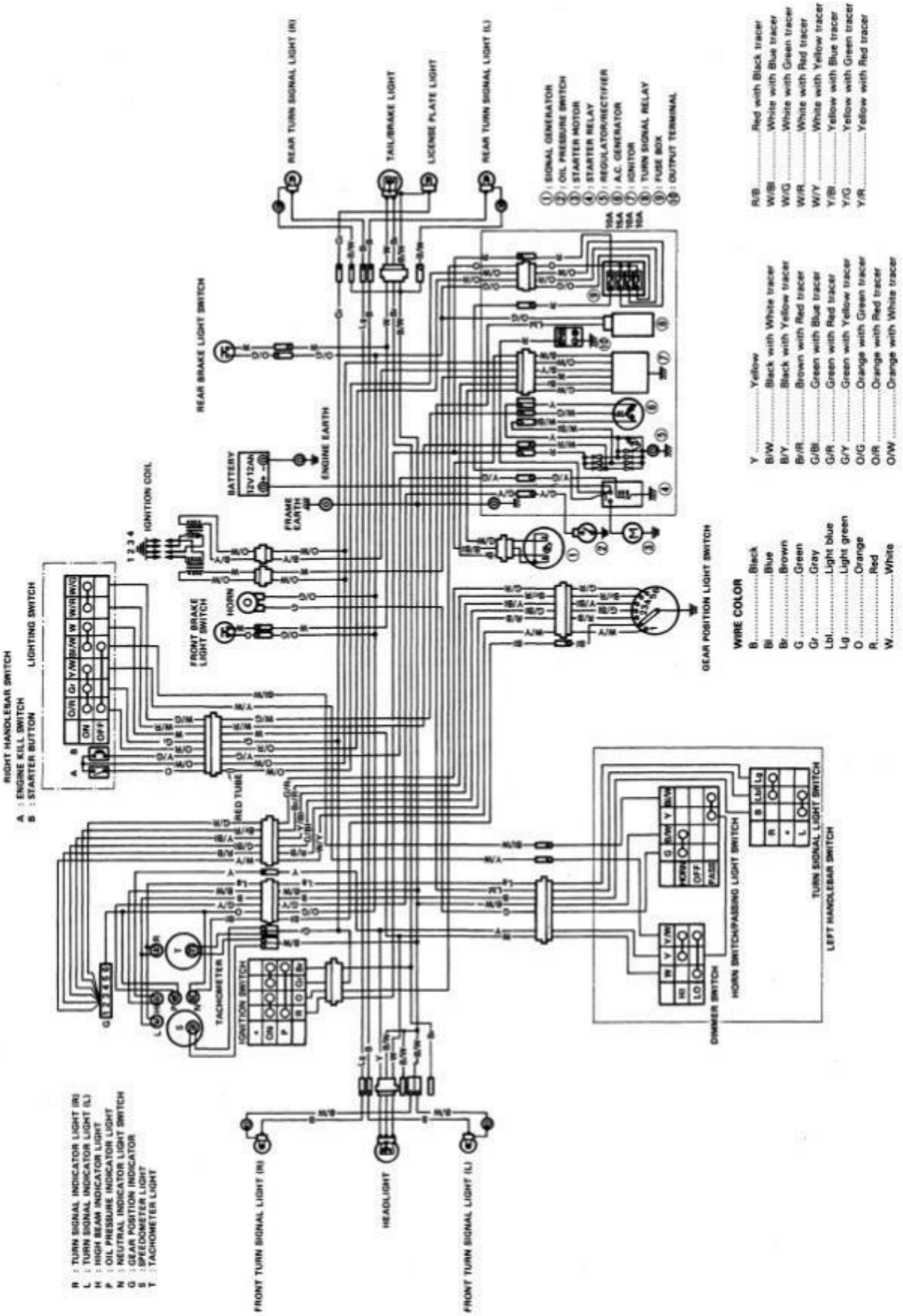

GS550"X" E-28

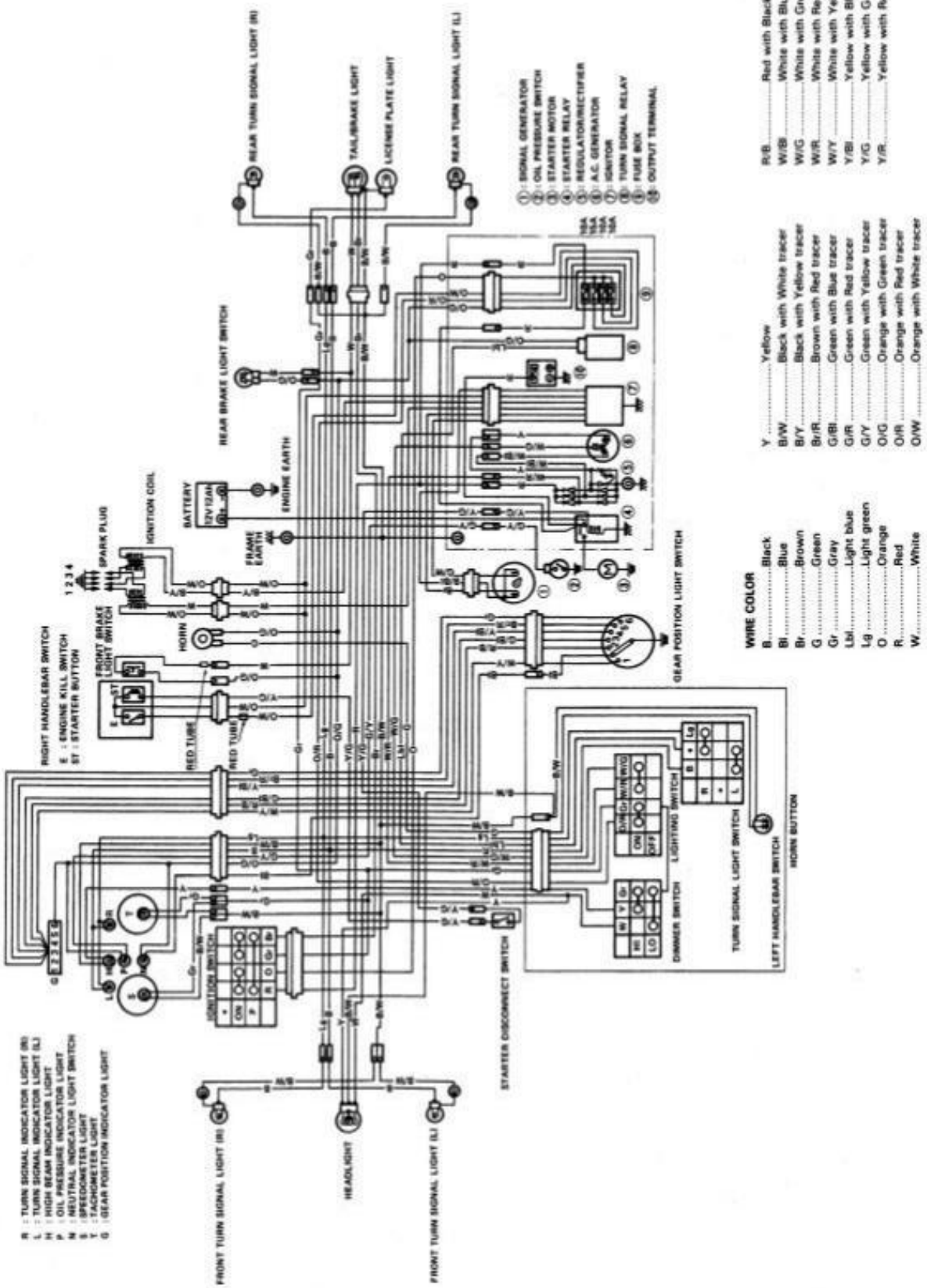
REAR TURN SIGNAL LIGHT (R)
TAIL/BRAKE LIGHT
LICENSE PLATE LIGHT
REAR TURN SIGNAL LIGHT (L)
1 : SIGNAL GENERATOR
2 : OIL PRESSURE SWITCH
3 : STARTER MOTOR
4 : STARTER RELAY
5 : REGULATOR/RECTIFIER
6 : A.C. GENERATOR
7 : IGNITOR
8 : TURN SIGNAL RELAY
9 : FUSE BOX
10 : OUTPUT TERMINAL
R/B .....Red with Black tracer
W/B .....White with Blue tracer
W/G .....White with Green tracer
W/R .....White with Red tracer
W/Y .....White with Yellow tracer
Y/B .....Yellow with Blue tracer
Y/G .....Yellow with Green tracer
Y/R .....Yellow with Red tracer
Y .....Yellow
B/W .....Black with White tracer
B/Y .....Black with Yellow tracer
Br/R .....Brown with Red tracer
G/Bl .....Green with Blue tracer
G/R .....Green with Red tracer
G/Y .....Green with Yellow tracer
O/G .....Orange with Green tracer
O/R .....Orange with Red tracer
O/W .....Orange with White tracer
WIRE COLOR
B .....Black
Bl .....Blue
Br .....Brown
G .....Green
Gr .....Gray
Lbl .....Light blue
Lg .....Light green
O .....Orange
R .....Red
W .....White
REAR BRAKE LIGHT SWITCH
BATTERY
12V 12AH
ENGINE EARTH
FRAME EARTH
IGNITION COIL
SPARK PLUG
1 2 3 4
FRONT BRAKE LIGHT SWITCH
HORN
RIGHT HANDLEBAR SWITCH
E : ENGINE KILL SWITCH
ST : STARTER BUTTON
RED TUBE
GEAR POSITION LIGHT SWITCH
IGNITION SWITCH
STARTER DISCONNECT SWITCH
DIMMER SWITCH
LIGHTING SWITCH
TURN SIGNAL LIGHT SWITCH
LEFT HANDLEBAR SWITCH
HORN BUTTON
R : TURN SIGNAL INDICATOR LIGHT (R)
L : TURN SIGNAL INDICATOR LIGHT (L)
H : HIGH BEAM INDICATOR LIGHT
P : OIL PRESSURE INDICATOR LIGHT
N : NEUTRAL INDICATOR LIGHT SWITCH
S : SPEEDOMETER LIGHT
T : TACHOMETER LIGHT
G : GEAR POSITION INDICATOR LIGHT
FRONT TURN SIGNAL LIGHT (R)
HEADLIGHT
FRONT TURN SIGNAL LIGHT (L)

GS500"X", GS550"X", GS550M"X" E-34

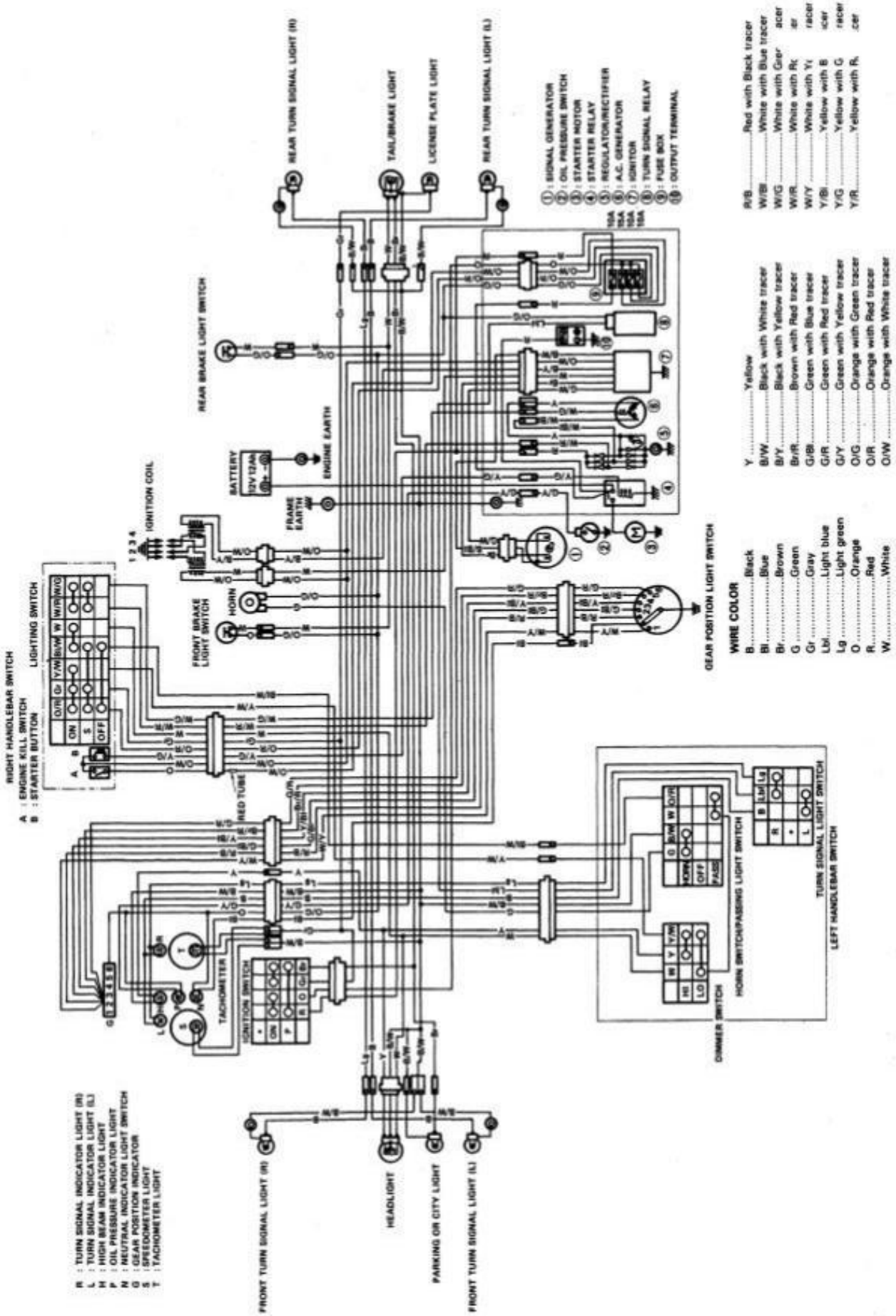

GS500L "X" E-15, 17, 39

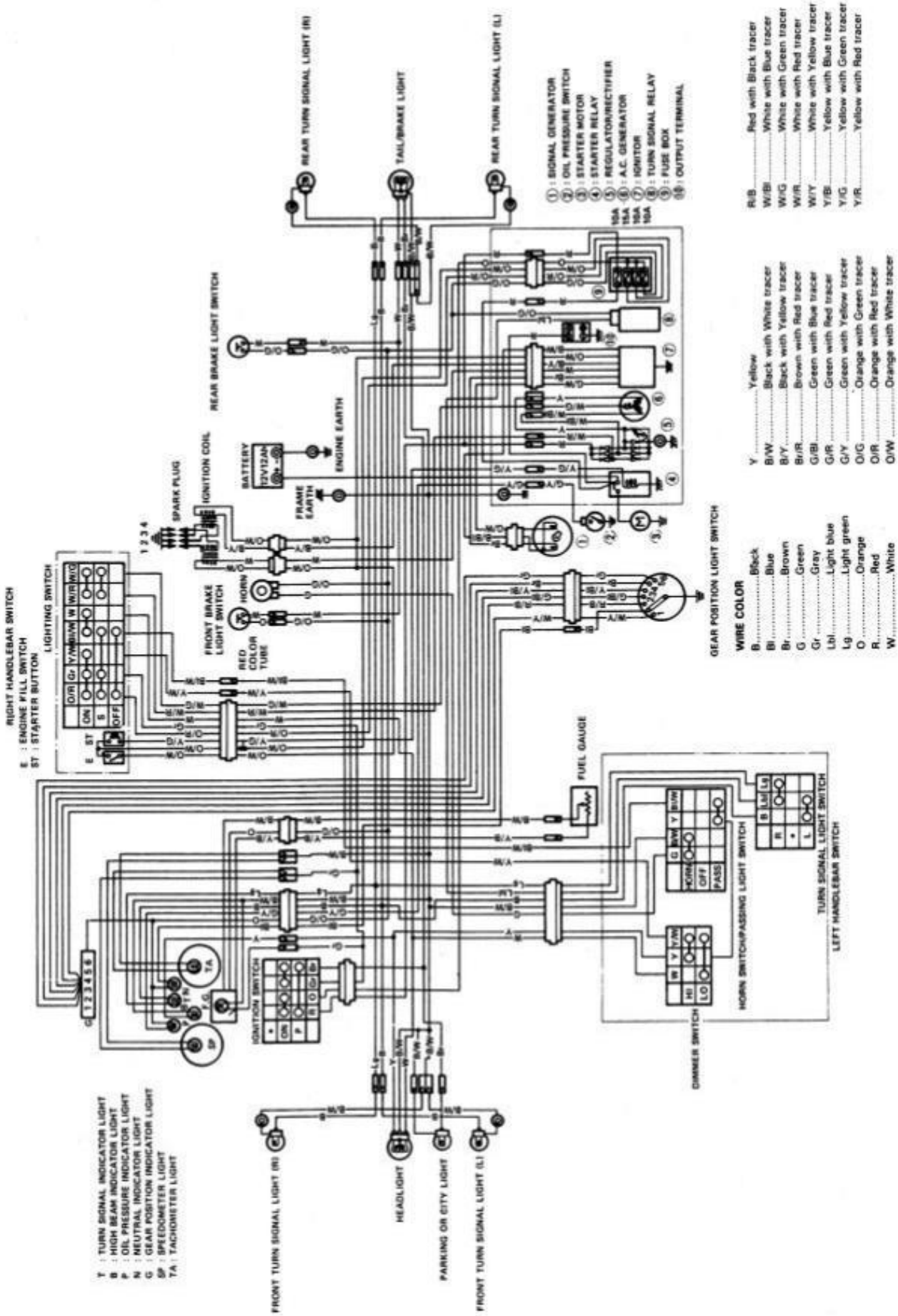

GS550L"X" E-01, 06

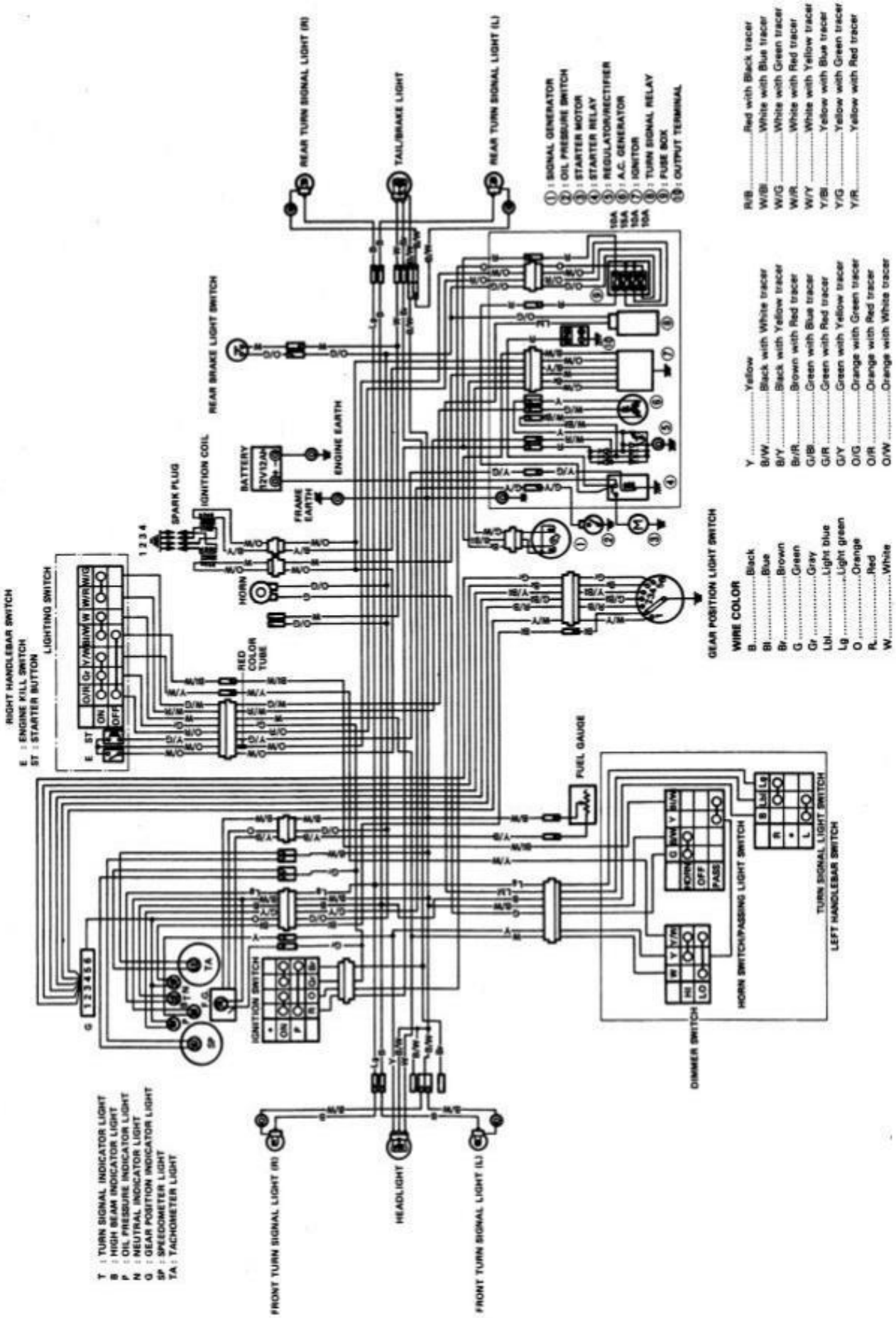

GS550L"X" E-02

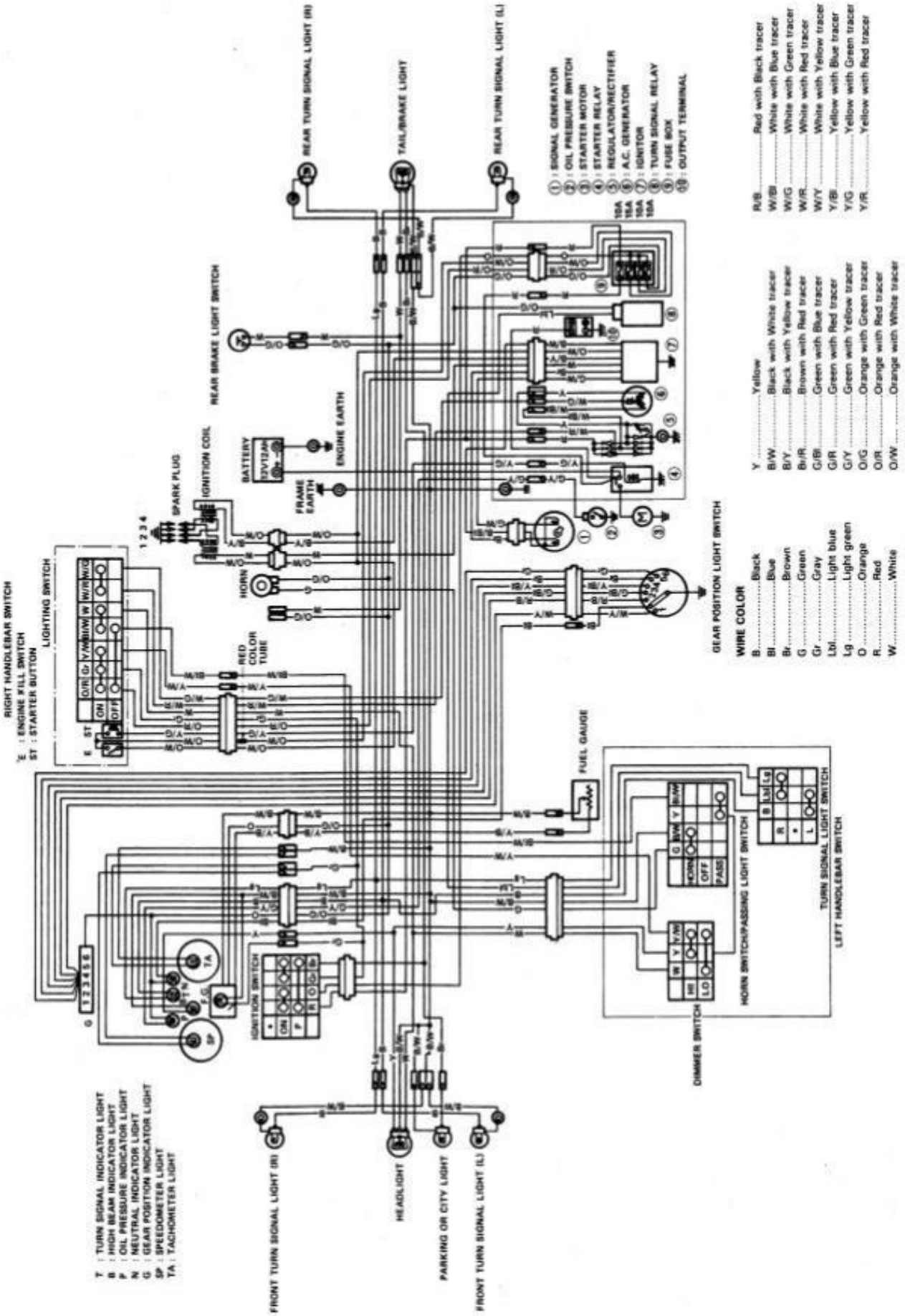
REAR TURN SIGNAL LIGHT (R)
TAIL/BRAKE LIGHT
REAR TURN SIGNAL LIGHT (L)
① : SIGNAL GENERATOR
② : OIL PRESSURE SWITCH
③ : STARTER MOTOR
④ : STARTER RELAY
⑤ : REGULATOR/RECTIFIER
⑥ : A.C. GENERATOR
⑦ : IGNITOR
⑧ : TURN SIGNAL RELAY
⑨ : FUSE BOX
⑩ : OUTPUT TERMINAL
10A
15A
10A
10A
R/B .....Red with Black tracer
W/B .....White with Blue tracer
W/G .....White with Green tracer
W/R .....White with Red tracer
W/Y .....White with Yellow tracer
Y/B .....Yellow with Blue tracer
Y/G .....Yellow with Green tracer
Y/R .....Yellow with Red tracer
REAR BRAKE LIGHT SWITCH
ENGINE EARTH
BATTERY
12V12AH
FRAME EARTH
SPARK PLUG
IGNITION COIL
1 2 3 4
HORN
Y .....Yellow
B/W .....Black with White tracer
B/Y .....Black with Yellow tracer
Br/R .....Brown with Red tracer
G/Bl .....Green with Blue tracer
G/R .....Green with Red tracer
G/Y .....Green with Yellow tracer
O/G .....Orange with Green tracer
O/R .....Orange with Red tracer
O/W .....Orange with White tracer
GEAR POSITION LIGHT SWITCH
WIRE COLOR
B .....Black
Bl .....Blue
Br .....Brown
G .....Green
Gr .....Gray
Lbl .....Light blue
Lg .....Light green
O .....Orange
R .....Red
W .....White
RIGHT HANDLEBAR SWITCH
E : ENGINE KILL SWITCH
ST : STARTER BUTTON
LIGHTING SWITCH
RED COLOR TUBE
FUEL GAUGE
IGNITION SWITCH
DIMMER SWITCH
HORN SWITCH/PASSING LIGHT SWITCH
TURN SIGNAL LIGHT SWITCH
LEFT HANDLEBAR SWITCH
T : TURN SIGNAL INDICATOR LIGHT
B : HIGH BEAM INDICATOR LIGHT
P : OIL PRESSURE INDICATOR LIGHT
N : NEUTRAL INDICATOR LIGHT
G : GEAR POSITION INDICATOR LIGHT
SP : SPEEDOMETER LIGHT
TA : TACHOMETER LIGHT
FRONT TURN SIGNAL LIGHT (R)
HEADLIGHT
PARKING OR CITY LIGHT
FRONT TURN SIGNAL LIGHT (L)

GS550L"X" E-03, 28

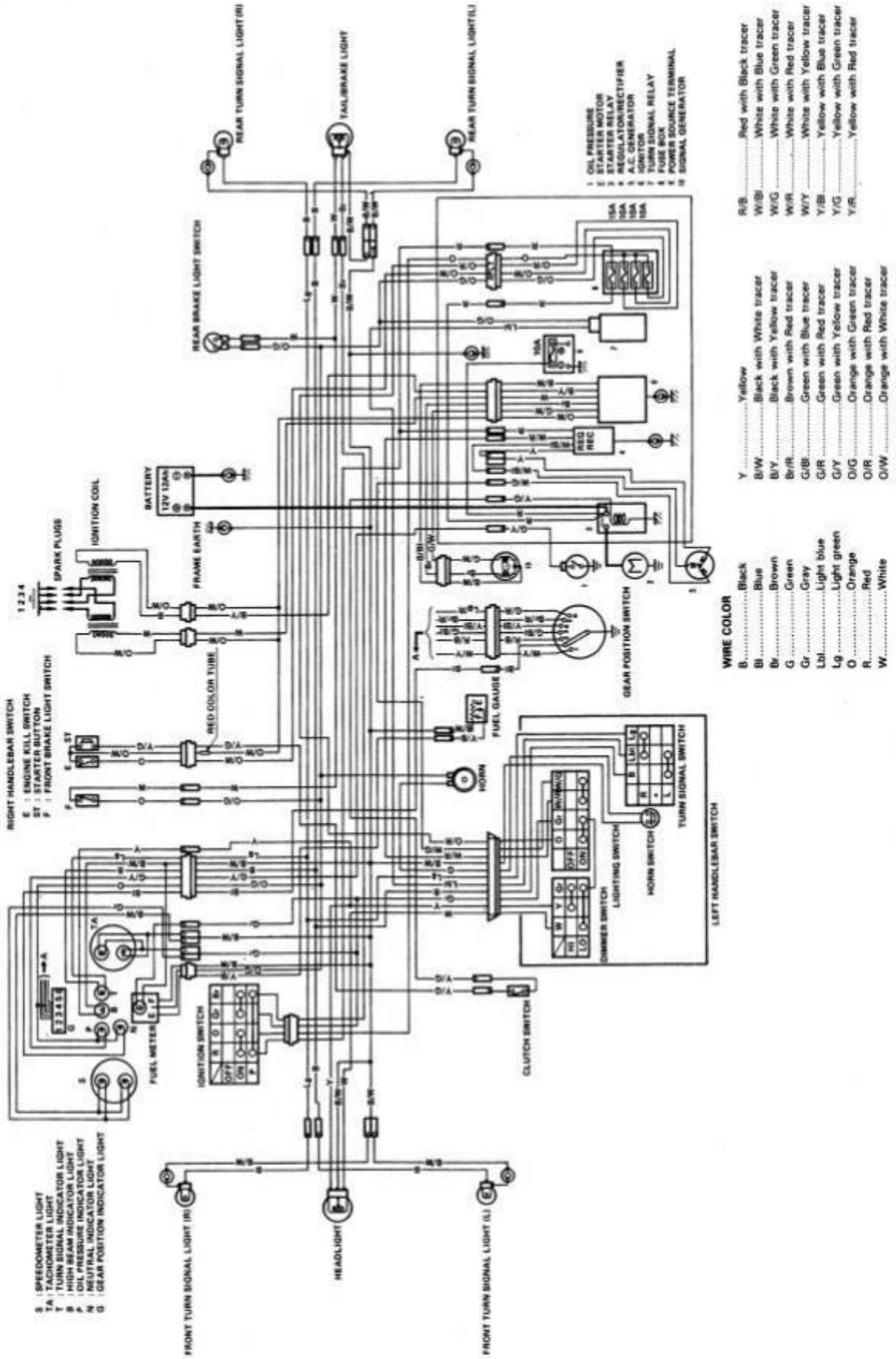

GS550L"X" E-04, 21, 26, 39

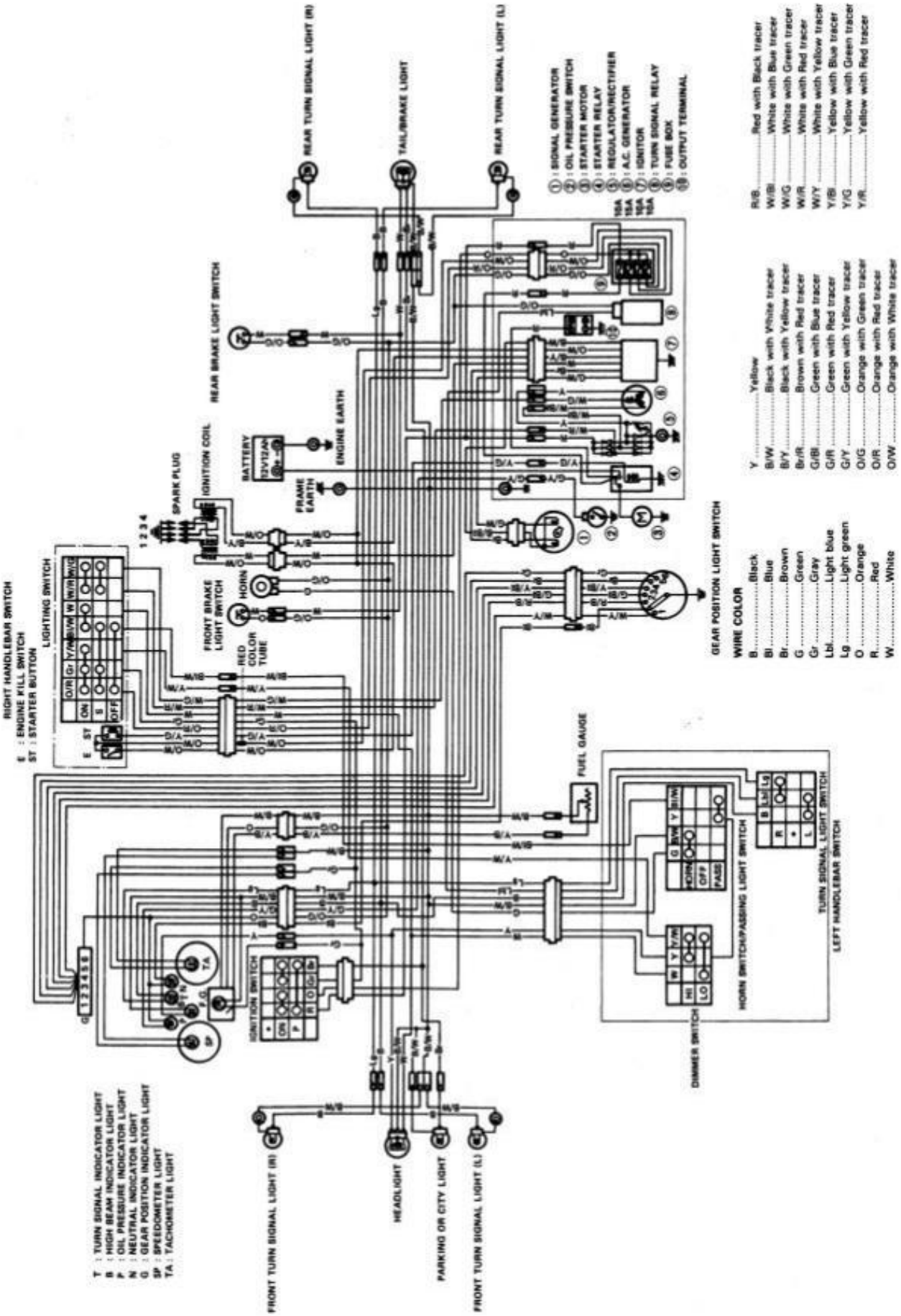

GS550L"X" E-22, 25

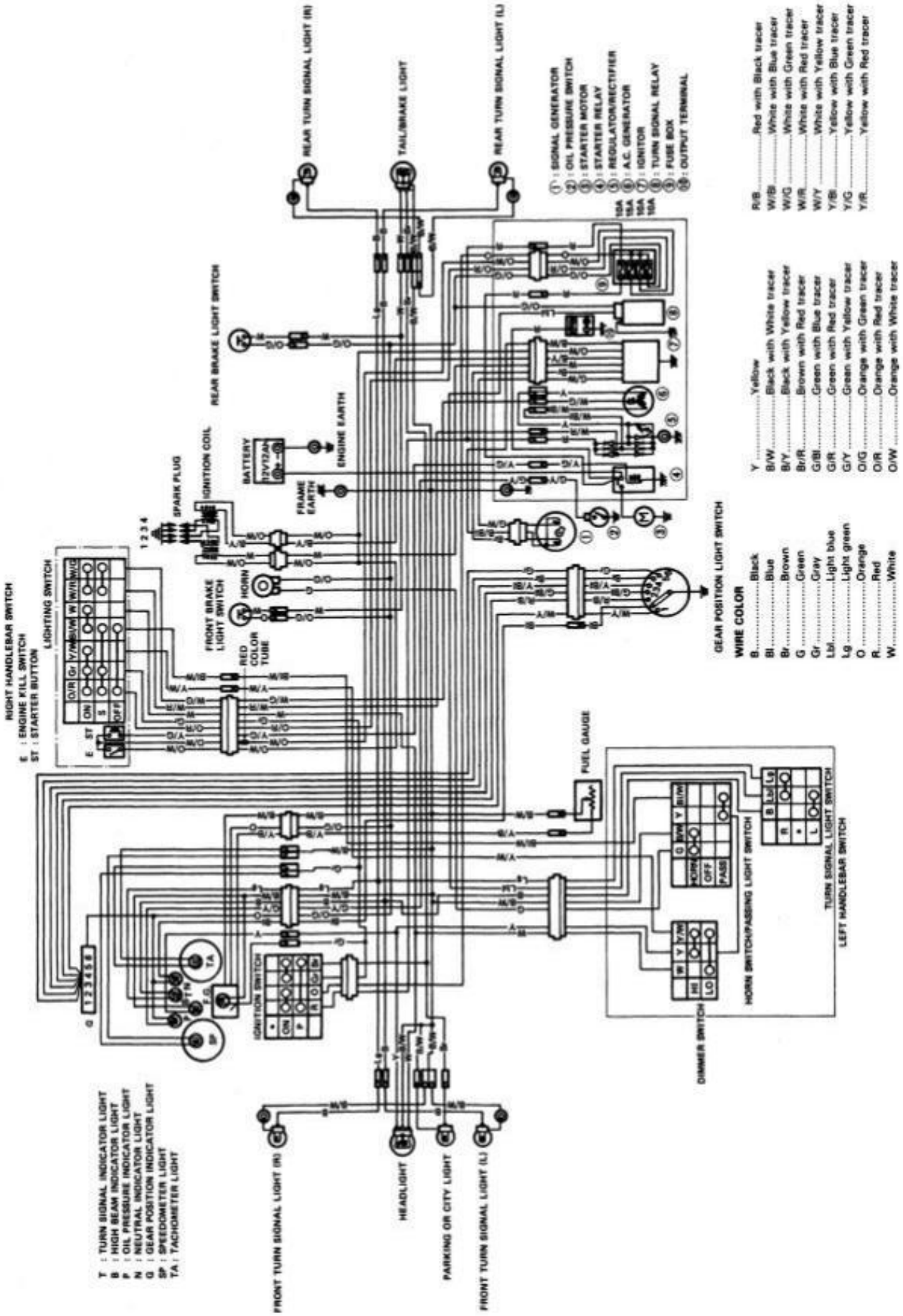

GS550L"X" E-24

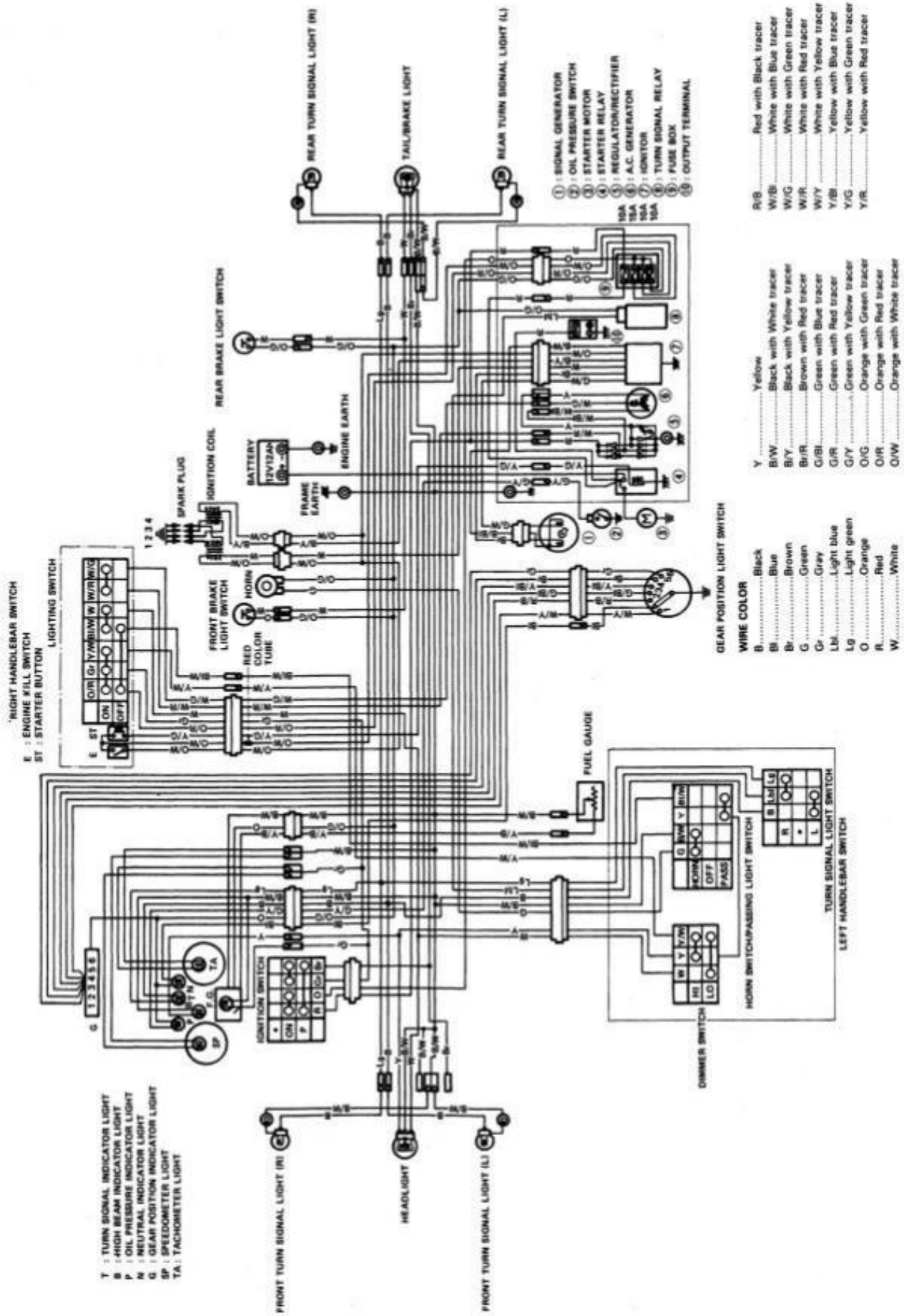
REAR TURN SIGNAL LIGHT (R)
TAIL/BRAKE LIGHT
REAR TURN SIGNAL LIGHT (L)
1 : SIGNAL GENERATOR
2 : OIL PRESSURE SWITCH
3 : STARTER MOTOR
4 : STARTER RELAY
5 : REGULATOR/RECTIFIER
6 : A.C. GENERATOR
7 : IGNITOR
8 : TURN SIGNAL RELAY
9 : FUSE BOX
10 : OUTPUT TERMINAL
10A
15A
10A
10A
R/B .....Red with Black tracer
W/B .....White with Blue tracer
W/G .....White with Green tracer
W/R .....White with Red tracer
W/Y .....White with Yellow tracer
Y/B .....Yellow with Blue tracer
Y/G .....Yellow with Green tracer
Y/R .....Yellow with Red tracer
REAR BRAKE LIGHT SWITCH
ENGINE EARTH
BATTERY
12V12AH
FRAME EARTH
IGNITION COIL
SPARK PLUG
1 2 3 4
HORN
FRONT BRAKE LIGHT SWITCH
RED COLOR TUBE
Y .....Yellow
B/W .....Black with White tracer
B/Y .....Black with Yellow tracer
Br/R .....Brown with Red tracer
G/Bl .....Green with Blue tracer
G/R .....Green with Red tracer
G/Y .....Green with Yellow tracer
O/G .....Orange with Green tracer
O/R .....Orange with Red tracer
O/W .....Orange with White tracer
GEAR POSITION LIGHT SWITCH
WIRE COLOR
B .....Black
Bl .....Blue
Br .....Brown
G .....Green
Gr .....Gray
Lbl .....Light blue
Lg .....Light green
O .....Orange
R .....Red
W .....White
RIGHT HANDLEBAR SWITCH
E : ENGINE KILL SWITCH
ST : STARTER BUTTON
LIGHTING SWITCH
FUEL GAUGE
IGNITION SWITCH
HORN SWITCH/PASSING LIGHT SWITCH
TURN SIGNAL LIGHT SWITCH
LEFT HANDLEBAR SWITCH
DIMMER SWITCH
T : TURN SIGNAL INDICATOR LIGHT
B : HIGH BEAM INDICATOR LIGHT
P : OIL PRESSURE INDICATOR LIGHT
N : NEUTRAL INDICATOR LIGHT
G : GEAR POSITION INDICATOR LIGHT
SP : SPEEDOMETER LIGHT
TA : TACHOMETER LIGHT
FRONT TURN SIGNAL LIGHT (R)
HEADLIGHT
FRONT TURN SIGNAL LIGHT (L)

GS550L"X" E-34

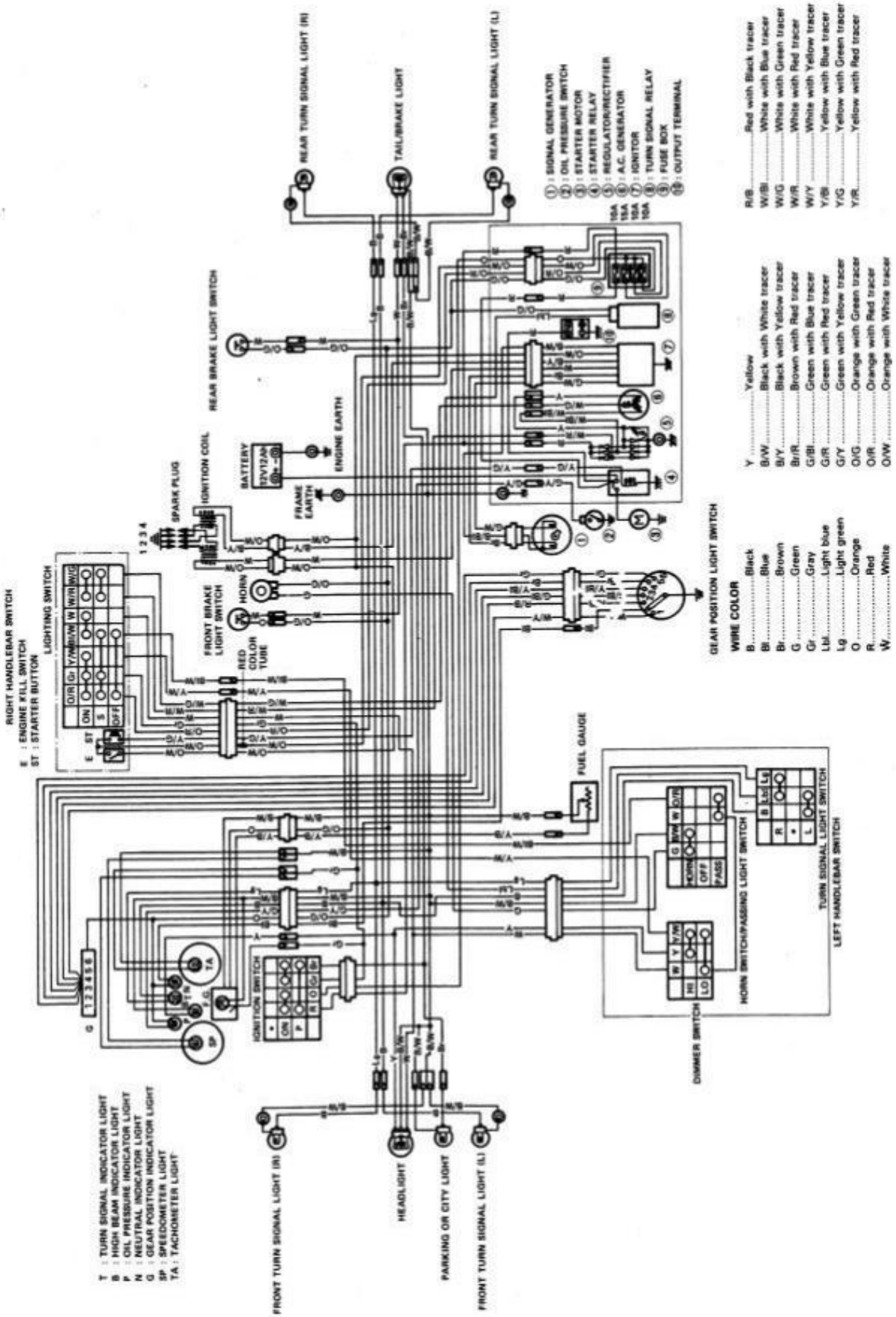
REAR TURN SIGNAL LIGHT (R)
TAIL/BRAKE LIGHT
REAR TURN SIGNAL LIGHT (L)
① : SIGNAL GENERATOR
② : OIL PRESSURE SWITCH
③ : STARTER MOTOR
④ : STARTER RELAY
⑤ : REGULATOR/RECTIFIER
⑥ : A.C. GENERATOR
⑦ : IGNITOR
⑧ : TURN SIGNAL RELAY
⑨ : FUSE BOX
⑩ : OUTPUT TERMINAL
15A
15A
15A
10A
R/B .....Red with Black tracer
W/Bl .....White with Blue tracer
W/G .....White with Green tracer
W/R .....White with Red tracer
W/Y .....White with Yellow tracer
Y/Bl .....Yellow with Blue tracer
Y/G .....Yellow with Green tracer
Y/R .....Yellow with Red tracer
REAR BRAKE LIGHT SWITCH
ENGINE EARTH
BATTERY
12V/12AH
FRAME EARTH
IGNITION COIL
SPARK PLUG
1 2 3 4
HORN
FRONT BRAKE LIGHT SWITCH
RED COLOR TUBE
LIGHTING SWITCH
RIGHT HANDLEBAR SWITCH
E : ENGINE KILL SWITCH
ST : STARTER BUTTON
Y .....Yellow
B/W .....Black with White tracer
B/Y .....Black with Yellow tracer
Br/R .....Brown with Red tracer
G/Bl .....Green with Blue tracer
G/R .....Green with Red tracer
G/Y .....Green with Yellow tracer
O/G .....Orange with Green tracer
O/R .....Orange with Red tracer
O/W .....Orange with White tracer
GEAR POSITION LIGHT SWITCH
WIRE COLOR
B .....Black
Bl .....Blue
Br .....Brown
G .....Green
Gr .....Gray
Lbl .....Light blue
Lg .....Light green
O .....Orange
R .....Red
W .....White
FUEL GAUGE
IGNITION SWITCH
TA
SP
G
DIMMER SWITCH
HORN SWITCH/PASSING LIGHT SWITCH
TURN SIGNAL LIGHT SWITCH
LEFT HANDLEBAR SWITCH
T : TURN SIGNAL INDICATOR LIGHT
B : HIGH BEAM INDICATOR LIGHT
P : OIL PRESSURE INDICATOR LIGHT
N : NEUTRAL INDICATOR LIGHT
G : GEAR POSITION INDICATOR LIGHT
SP : SPEEDOMETER LIGHT
TA : TACHOMETER LIGHT
FRONT TURN SIGNAL LIGHT (R)
HEADLIGHT
PARKING OR CITY LIGHT
FRONT TURN SIGNAL LIGHT (L)

GS550T"X" E-03, 28

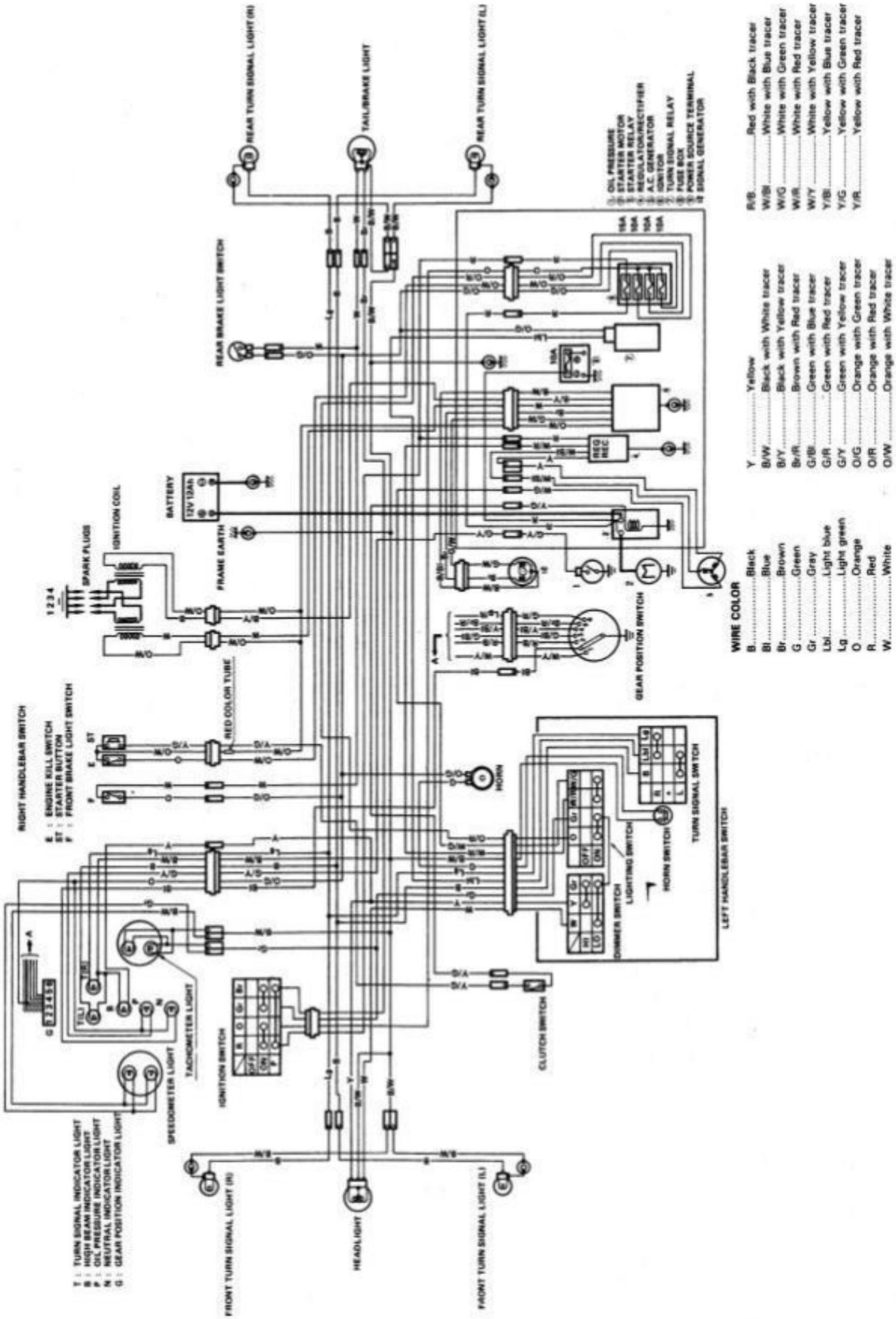

GS550T"X" E-06

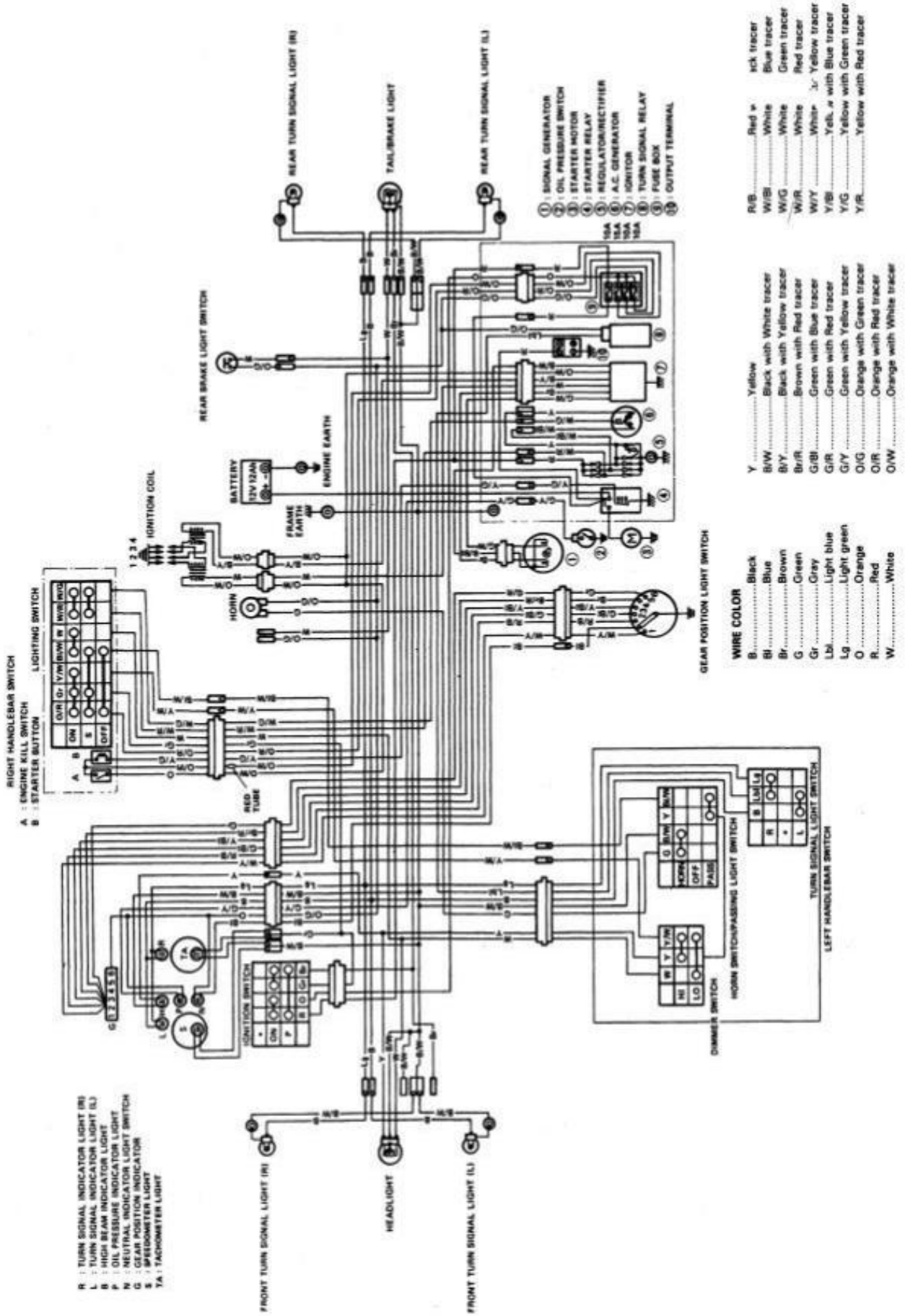
REAR TURN SIGNAL LIGHT (R)
TAIL/BRAKE LIGHT
REAR TURN SIGNAL LIGHT (L)
1 : SIGNAL GENERATOR
2 : OIL PRESSURE SWITCH
3 : STARTER MOTOR
4 : STARTER RELAY
5 : REGULATOR/RECTIFIER
6 : A.C. GENERATOR
7 : IGNITOR
8 : TURN SIGNAL RELAY
9 : FUSE BOX
10 : OUTPUT TERMINAL
10A
10A
10A
10A
REAR BRAKE LIGHT SWITCH
BATTERY
12V 12AH
ENGINE EARTH
FRAME EARTH
IGNITION COIL
1 2 3 4
HORN
GEAR POSITION LIGHT SWITCH
RIGHT HANDLEBAR SWITCH
A : ENGINE KILL SWITCH
B : STARTER BUTTON
LIGHTING SWITCH
RED TUBE
IGNITION SWITCH
DIMMER SWITCH
HORN SWITCH/PASSING LIGHT SWITCH
TURN SIGNAL LIGHT SWITCH
LEFT HANDLEBAR SWITCH
FRONT TURN SIGNAL LIGHT (R)
HEADLIGHT
FRONT TURN SIGNAL LIGHT (L)
R : TURN SIGNAL INDICATOR LIGHT (R)
L : TURN SIGNAL INDICATOR LIGHT (L)
B : HIGH BEAM INDICATOR LIGHT
P : OIL PRESSURE INDICATOR LIGHT
N : NEUTRAL INDICATOR LIGHT SWITCH
G : GEAR POSITION INDICATOR
S : SPEEDOMETER LIGHT
TA : TACHOMETER LIGHT
WIRE COLOR
B.....Black
Bl.....Blue
Br.....Brown
G.....Green
Gr.....Gray
Lbl.....Light blue
Lg.....Light green
O.....Orange
R.....Red
W.....White
Y.....Yellow
B/W.....Black with White tracer
B/Y.....Black with Yellow tracer
Br/R.....Brown with Red tracer
G/Bl.....Green with Blue tracer
G/R.....Green with Red tracer
G/Y.....Green with Yellow tracer
O/G.....Orange with Green tracer
O/R.....Orange with Red tracer
O/W.....Orange with White tracer
R/B.....Red with Black tracer
W/Bl.....White with Blue tracer
W/G.....White with Green tracer
W/R.....White with Red tracer
W/Y.....White with Yellow tracer
Y/Bl.....Yellow with Blue tracer
Y/G.....Yellow with Green tracer
Y/R.....Yellow with Red tracer

GS550T"X" E-22, 25

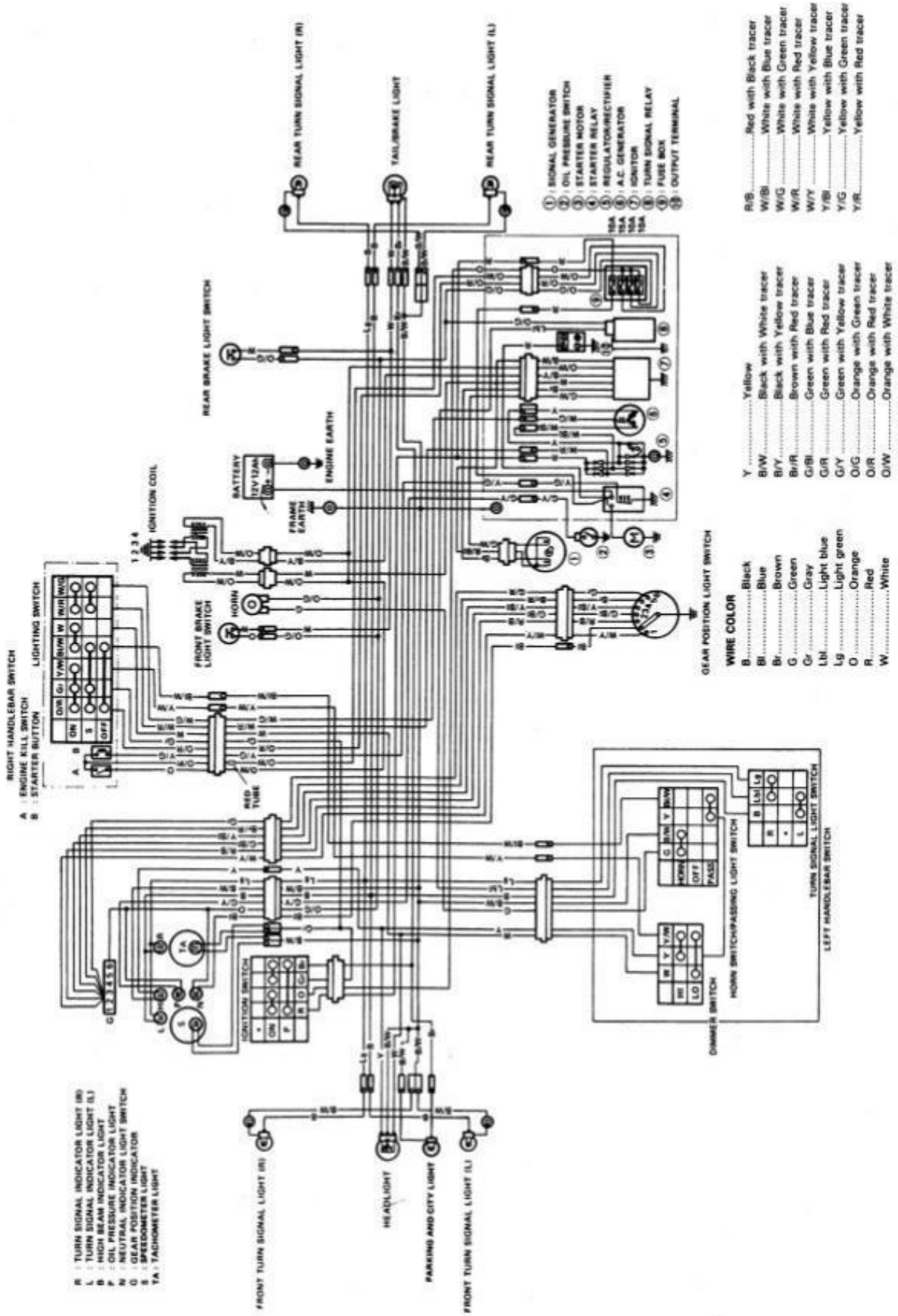

CABLE ROUTING

GS500E, GS500M, GS550, GS550E AND GS550M

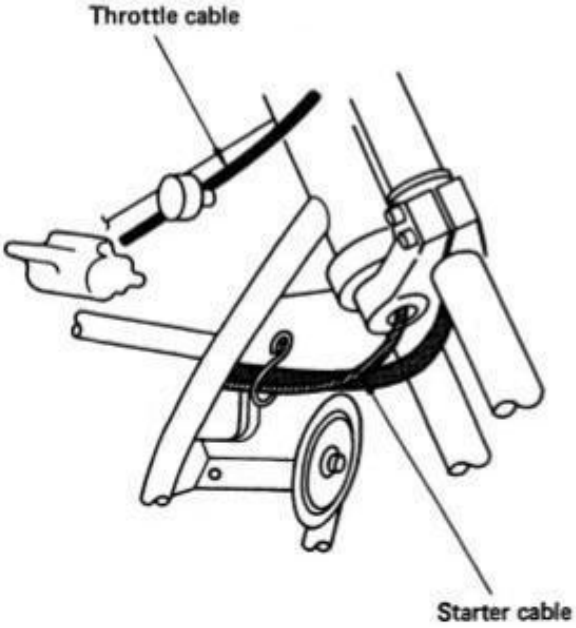

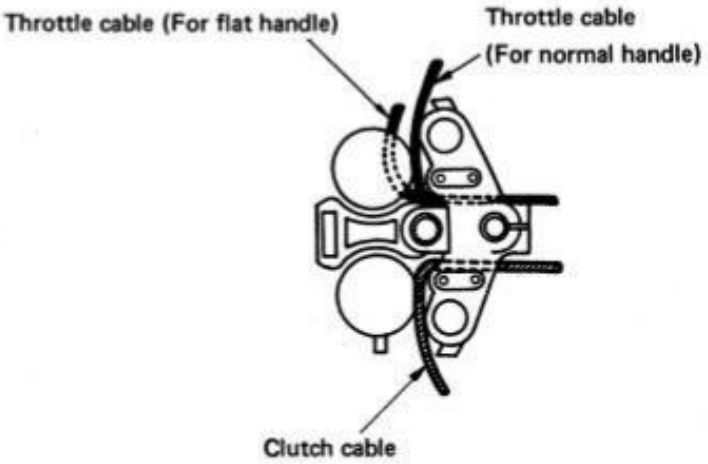

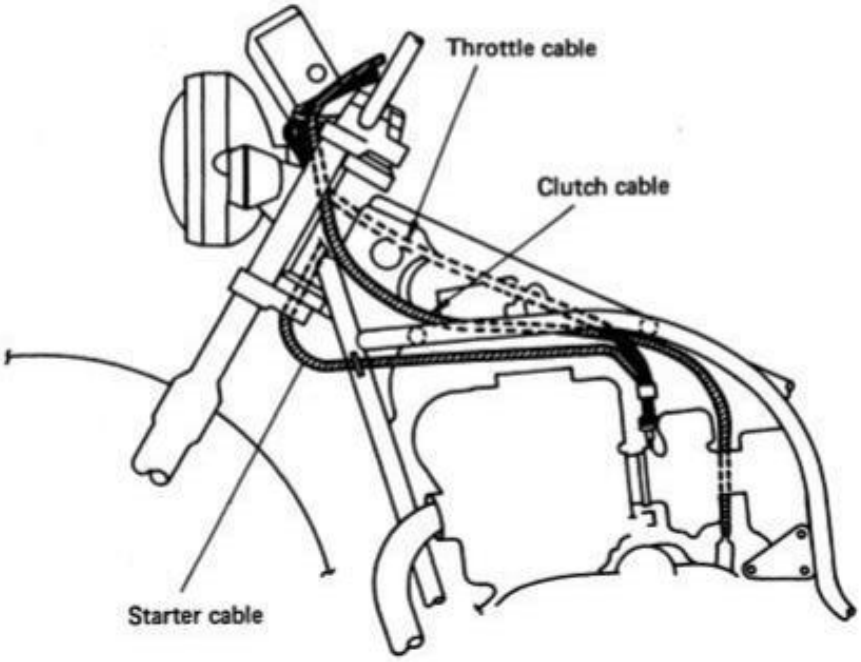

GS500L, GS550T AND GS550L

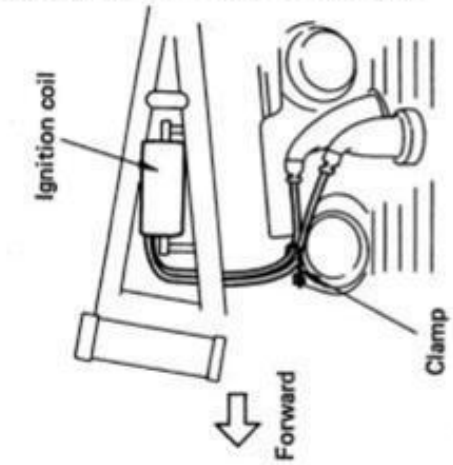

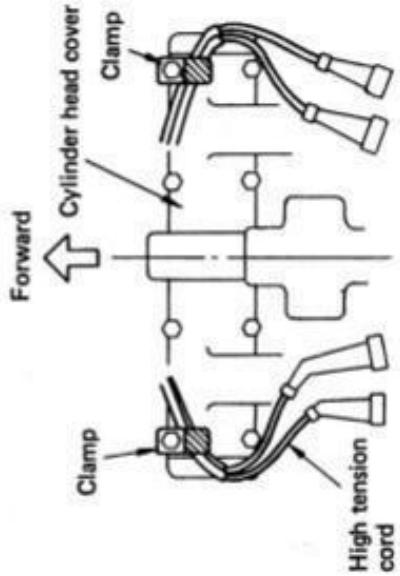

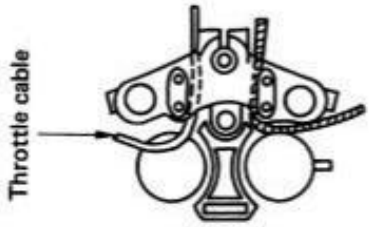

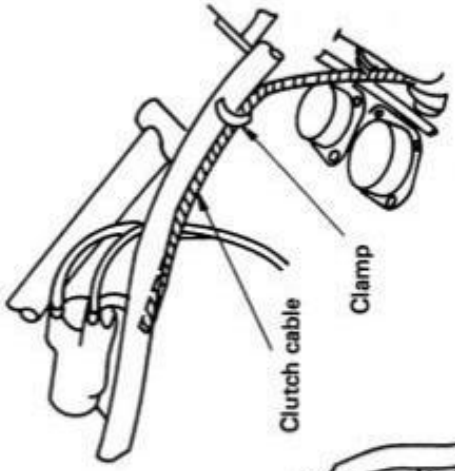

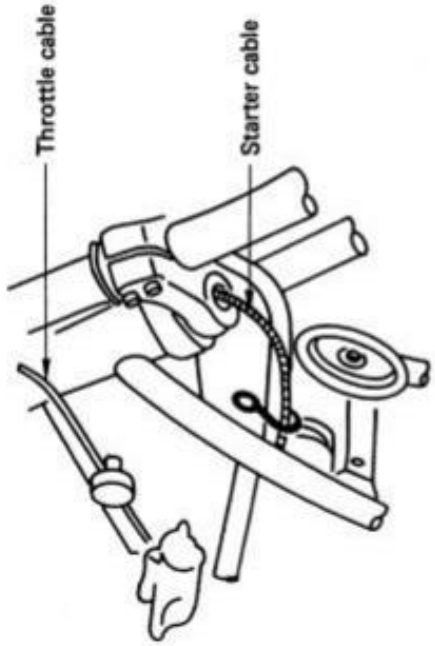

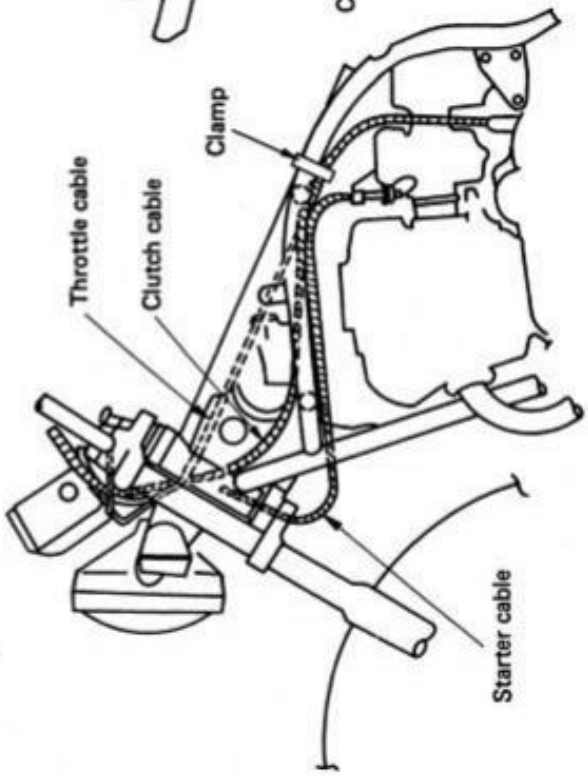

BRAKE HOSE ROUTING

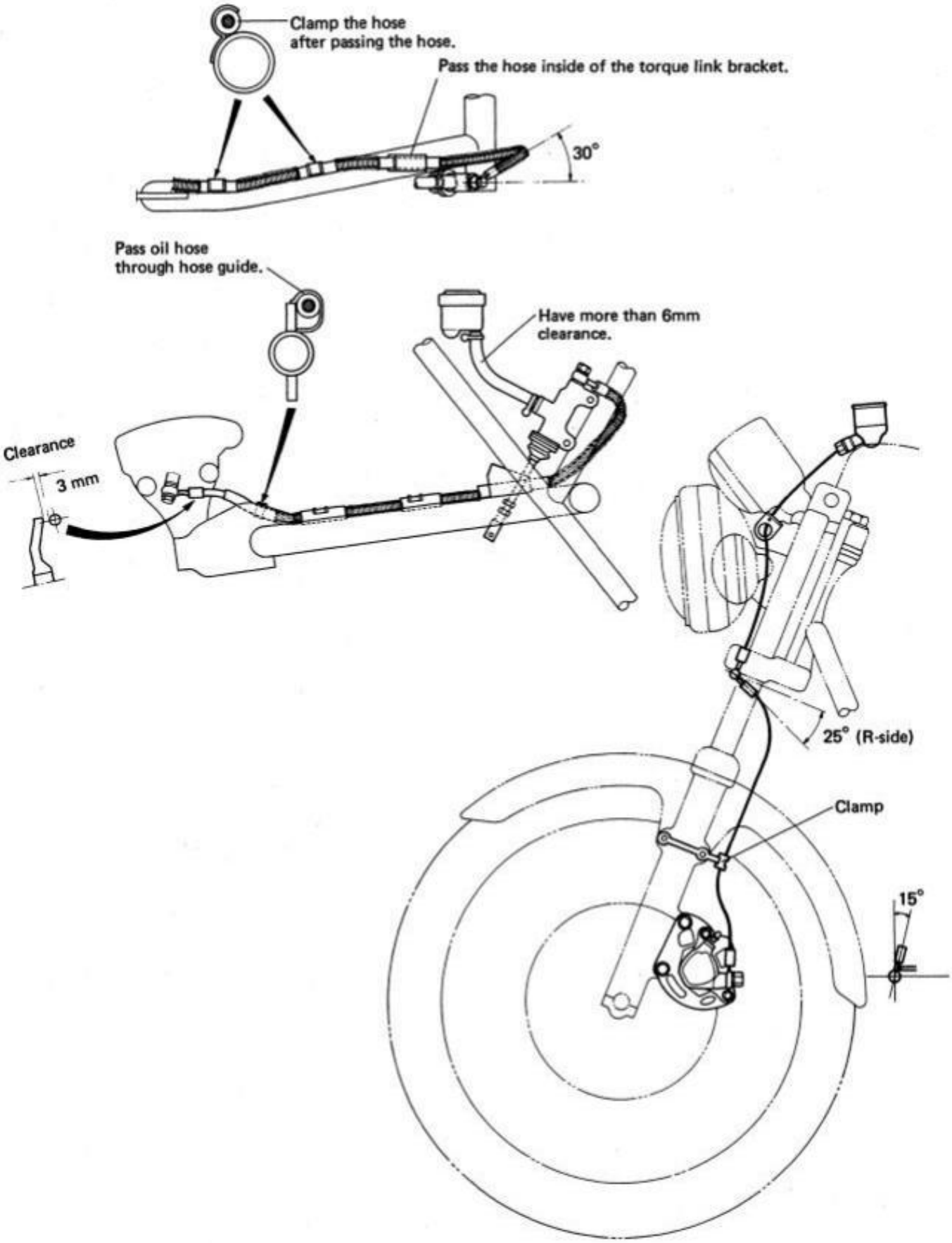

WIRE HARNESS ROUTING

GS500E, GS500M, GS550, GS550E AND GS550M

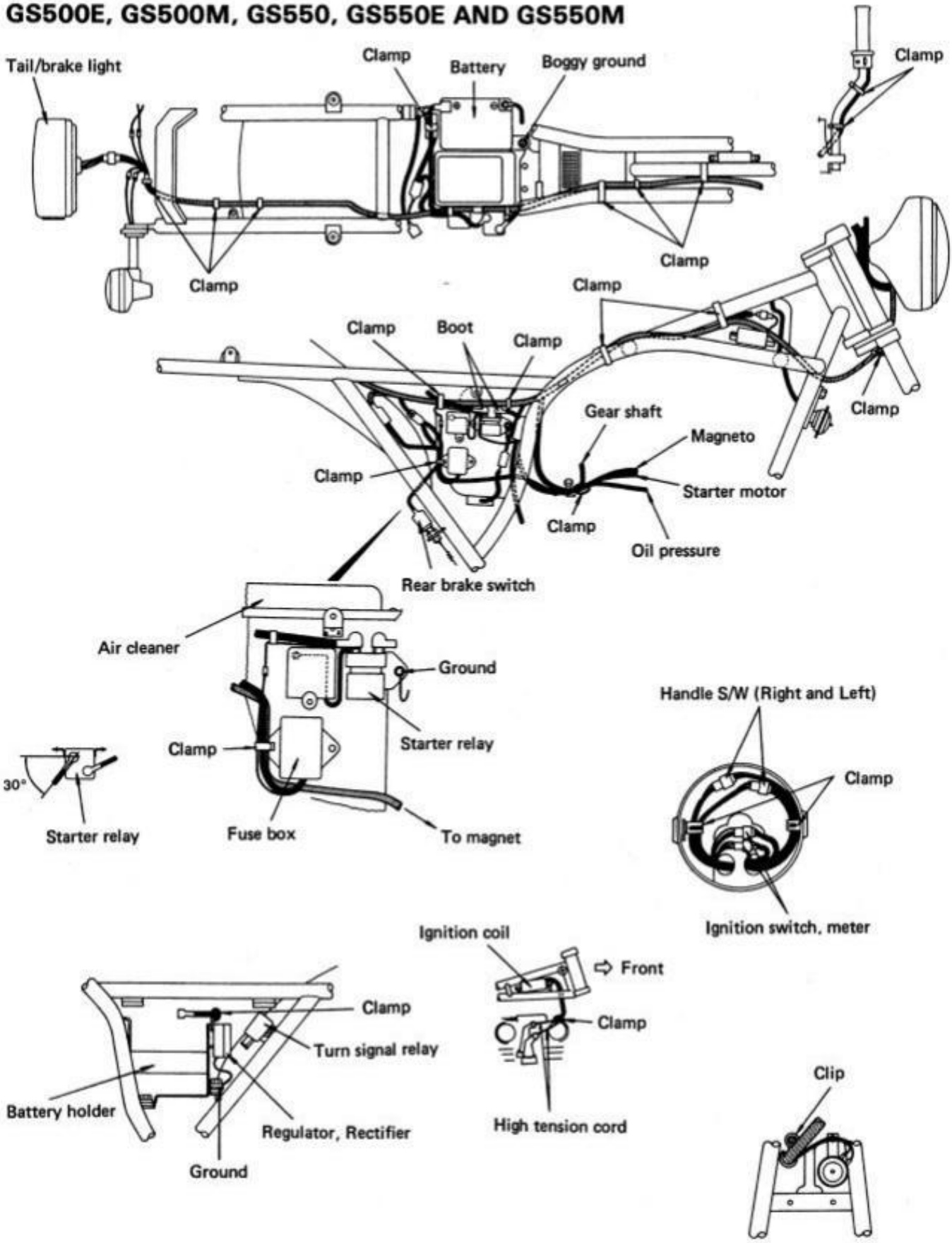

GS500L, GS550T AND GS550L

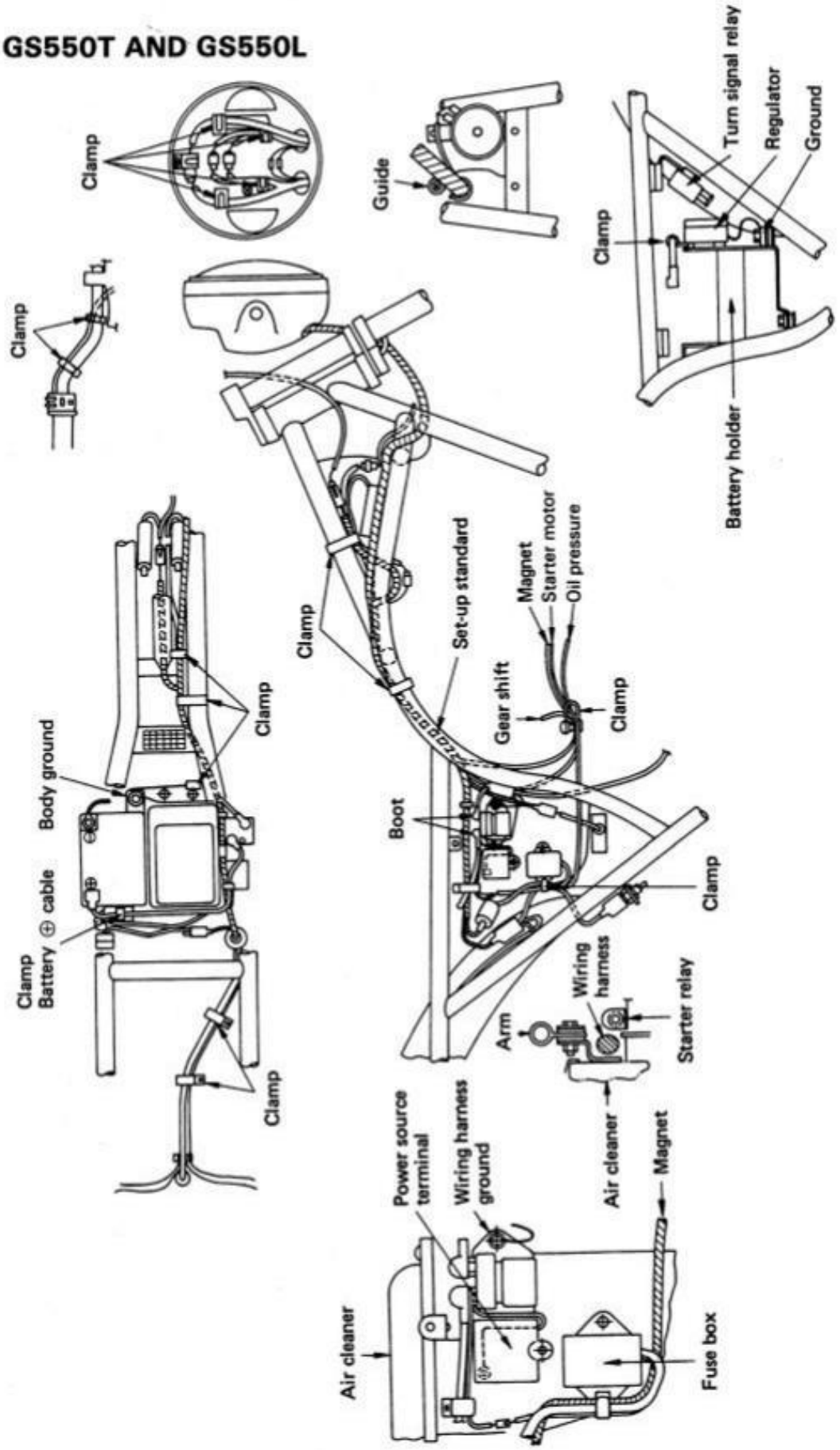

FOREWORD

The SUZUKI GS550-series are new 1981 models and incorporate many refinements and technical changes from the previous models. This new supplementary section has been produced to aid SUZUKI mechanics in propery maintaining and reparing these motorcycles, which incorporate so many new and innovative changes. These technical improvements have further enhanced the comfort, handling and overall performance of these outstanding models.

This supplementary section covers four models of GS550-series; GS550, GS550E, GS550T, and GS550L.

This supplementary section has been written primarily for the experienced SUZUKI mechanics but will also be very useful even for the do-it-yourself mechanics.
Please refer to the entire GS550 Service Manual for all other areas of information not covered in this manual.

CONTENTS

MODEL IDENTIFICATION 506
SPECIFICATIONS 508
MODIFICATIONS 511
SERVICE DATA
- GS550X AND GS550EX 513
- GS550LX 524
- GS550TX 535

WIRING DIAGRAM 546
CABLE ROUTING 549
BRAKE HOSE ROUTING 551
WIRE HARNESS ROUTING 552

MODEL IDENTIFICATION

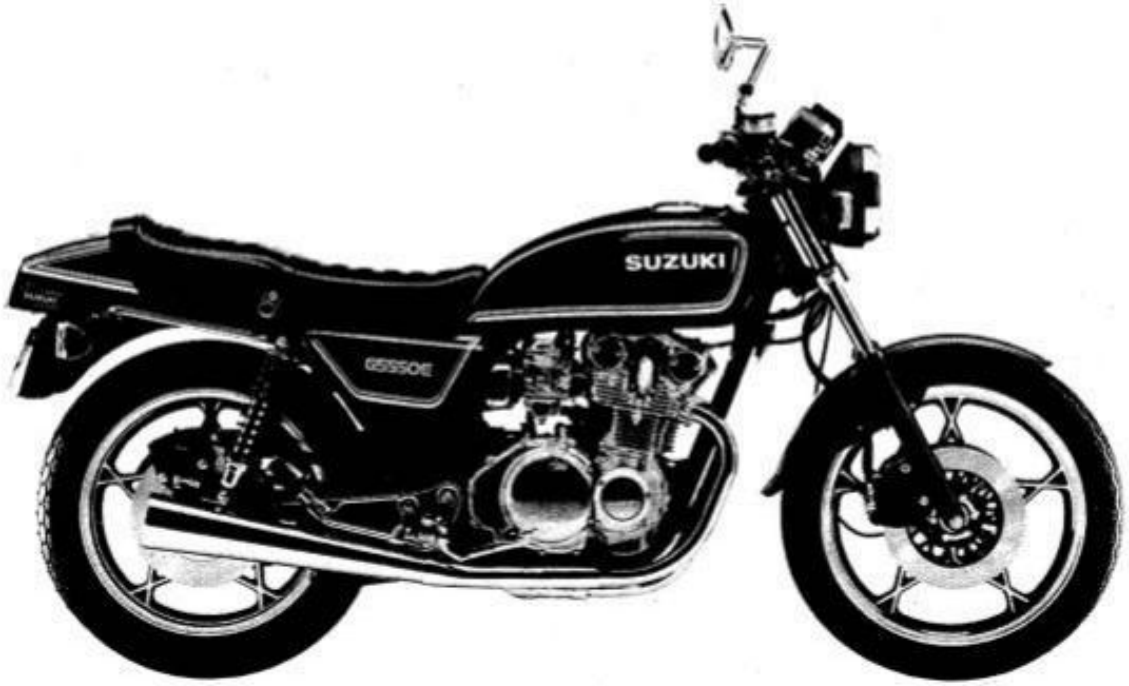

GS550/GS550E

GS550T

GS550L

SPECIFICATIONS

GS550 AND GS550E

DIMENSIONS AND DRY MASS

Overall length	2 150 mm
Overall width	850 mm
Overall height	1 150 mm
Wheelbase	1 440 mm
Ground clearance	150 mm
Seat height	780 mm
Dry mass	200 kg

ENGINE

Type	Four-stroke, air-cooled, DOHC
Number of cylinders	4
Bore	56.0 mm
Stroke	55.8 mm
Piston displacement	549 cm^3
Compression ratio	8.6 : 1
Carburetor	MIKUNI BS32SS, four
Air cleaner	Polyurethane foam element
Starter system	Electric
Lubrication system	Wet sump

TRANSMISSION

Clutch	Wet multi-plate type
Transmission	6-speed constant mesh
Gearshift pattern	1-down, 5-up
Primary reduction	1.977 (87/44)
Final reduction	3.333 (50/15)
Gear ratios, Low	2.666 (32/12)
2nd	1.777 (32/18)
3rd	1.380 (29/21)
4th	1.173 (27/23)
5th	1.045 (23/22)
Top	0.956 (22/23)
Drive chain	DAIDO D.I.D. 50HDL or TAKASAGO RK50SHO, 110 links

CHASSIS

Front suspension	Telescopic, oil dampened
Rear suspension	Swinging arm, oil dampened, spring 5-way adjustable
Steering angle	40° (right & left)
Caster	61°30′
Trail	116 mm
Turning radius	2.5 m
Front brake	Disc brake
Rear brake	Internal expanding...GS550 Disc brake...GS550E
Front tire size	3.25H19 4PR
Rear tire size	3.75H18 4PR
Front fork stroke	150 mm (5.91 in)
Rear wheel travel	100 mm (3.94 in)

ELECTRICAL

Ignition type	Transistorized
Ignition timing	15° B.T.D.C. below 1 500 r/min and 40° B.T.D.C. above 2 350 r/min
Spark plug	NGK B8ES or NIPPON DENSO W24ES-U
Battery	12V 43.2kC (12Ah)/10HR
Generator	Three-phase A.C. generator
Fuse	10/10/10/15A

CAPACITIES

Fuel tank including reserve	16L
reserve	4.0L
Engine oil	2.4L
Front fork oil	190 ml

GS550T

DIMENSIONS AND DRY MASS

Overall length	2 200 mm
Overall width	850 mm
Overall height	1 180 mm
Wheelbase	1 435 mm
Ground clearance	150 mm
Seat height	780 mm
Dry mass	200 kg

ENGINE

Type	Four-stroke, air-cooled, DOHC
Number of cylinders	4
Bore	56.0 mm
Stroke	55.8 mm
Piston displacement	549 cm^3
Compression ratio	8.6 : 1
Carburetor	MIKUNI BS32SS, four
Air cleaner	Polyurethane foam element
Starter system	Electric
Lubrication system	Wet sump

TRANSMISSION

Clutch	Wet multi-plate type
Transmission	6-speed constant mesh
Gearshift pattern	1-down, 5-up
Primary reduction	1.977 (87/44)
Final reduction	3.333 (50/15)
Gear ratios, Low	2.666 (32/12)
2nd	1.777 (32/18)
3rd	1.380 (29/21)
4th	1.173 (27/23)
5th	1.045 (23/22)
Top	0.956 (22/23)
Drive chain	DAIDO D.I.D. 50HDL or TAKASAGO RK50SHO, 110 links

CHASSIS

Front suspension	Telescopic, oil dampened
Rear suspension	Swinging arm, automatic dual damping, spring 5-way adjustable
Steering angle	40° (right & left)
Caster	61°30′
Trail	116 mm
Turning radius	2.5 m
Front brake	Disc brake
Rear brake	Disc brake
Front tire size	3.25H19 4PR
Rear tire size	4.25H17 4PR
Front fork stroke	150 mm
Rear wheel travel	100 mm

ELECTRICAL

Ignition type	Transistorized
Ignition timing	15° B.T.D.C. below 1 500 r/min and 40° B.T.D.C. above 2 350 r/min.
Spark plug	NGK B8ES or NIPPON DENSO W24ES-U
Battery	12V 43.2kC (12Ah)/10HR
Generator	Three-phase A.C. generator
Fuse	10/10/10/15A

CAPACITIES

Fuel tank including reserve	12L
reserve	4.0L
Engine oil	2.4L
Front fork oil	190 ml

GS550L

DIMENSIONS AND DRY MASS

Overall length	2 215 mm
Overall width	870 mm
Overall height	1 180 mm
Wheelbase	1 460 mm
Ground clearance	140 mm
Seat height	775 mm
Dry mass	205 kg

ENGINE

Type	Four-stroke, air-cooled, DOHC
Number of cylinders	4
Bore	56.0 mm
Stroke	55.8 mm
Piston displacement	549 cm^3
Compression ratio	8.6 : 1
Carburetor	MIKUNI BS32SS, four
Air cleaner	Polyurethane foam element
Starter system	Electric
Lubrication system	Wet sump

TRANSMISSION

Clutch	Wet multi-plate type
Transmission	6-speed constant mesh
Gearshift pattern	1-down, 5-up
Primary reduction	1.977 (87/44)
Final reduction	3.266 (49/15)
Gear ratios, Low	2.666 (32/12)
2nd	1.777 (32/18)
3rd	1.380 (29/21)
4th	1.173 (27/23)
5th	1.045 (23/22)
Top	0.956 (22/23)
Drive chain	DAIDO D.I.D. 50HDL or TAKASAGO RK50SHO, 108 links

CHASSIS

Front suspension	Telescopic, oil dampened
Rear suspension	Swinging arm, oil dampened, spring 5-way adjustable
Steering angle	40° (right & left)
Caster	60°00'
Trail	112 mm
Turning radius	2.5 m
Front brake	Disc brake
Rear brake	Disc brake
Front tire size	90/90-19 52H
Rear tire size	130/90-16 67H
Front fork stroke	160 mm
Rear wheel travel	95 mm

ELECTRICAL

Ignition type	Transistorized
Ignition timing	15° B.T.D.C. below 1 500 r/min and 40° B.T.D.C. above 2 350 r/min
Spark plug	NGK B8ES or NIPPON DENSO W24ES-U
Battery	12V 43.2kC (12Ah)/10HR
Generator	Three-phase A.C. generator
Fuse	10/10/10/15A

CAPACITIES

Fuel tank including reserve	12L
reserve	4.0L
Engine oil	2.4L
Front fork oil	249 ml

MODIFICATIONS

CAMSHAFT, SPROCKET AND BOLT

As the illustrated, the sprocket tightening bolt and method has been changed from Ⓐ to Ⓑ, to Ⓒ. Therefore, tightening torque should be observed.

Type Ⓐ

Part Name	Tightening torque
6 mm Allen bolt + Thread lock super "1303B"	8 – 12 N·m 0.8 – 1.2 kg·m 6.0 – 8.5 lb·ft

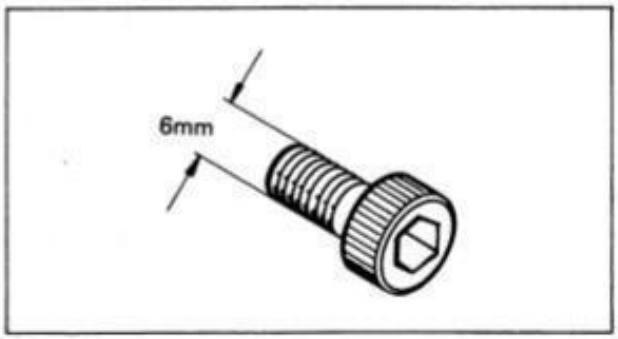

Type Ⓑ

Part Name	Tightening torque
6 mm bolt + Lock washer + Thread lock super "1303B"	15 – 20 N·m 1.5 – 2.0 kg·m 11.0 – 14.5 lb·ft

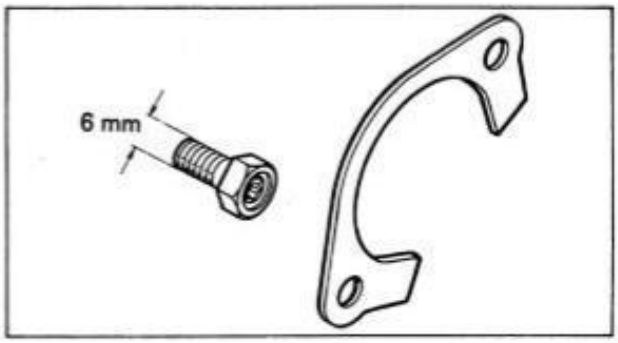

Type Ⓒ

Part Name	Tightening torque
7 mm flange bolt + Thread lock super "1303B"	24 – 26 N·m 2.4 – 2.6 kg·m 17.5 – 19.0 lb·ft

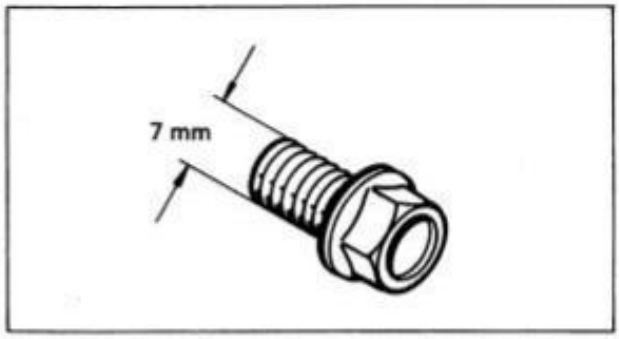

Part Name	Type Ⓐ Part Number	Type Ⓑ Part Number	Type Ⓒ Part Number
Bolt	09106-06024	09111-06033	09103-07001
Lock washer	–	12747-44000	–
IN, Cam sprocket	12741-47001	←	12741-47002
IN, Camshaft	12711-47000	←	12711-47001
EX, Cam sprocket	12751-47010	←	12751-47011
EX, Camshaft	12721-47010	←	12721-47011

NOTE:

Both Ⓐ type and Ⓑ type have an interchangeability by exchanging bolt for lock washer + bolt. However Ⓒ type has screw thread diameter of 7 mm, and bore diameters of the sprocket and the camshaft are also 7 mm, so there is no interchangeability with neither Ⓐ type nor Ⓑ type.

STEERING STEM

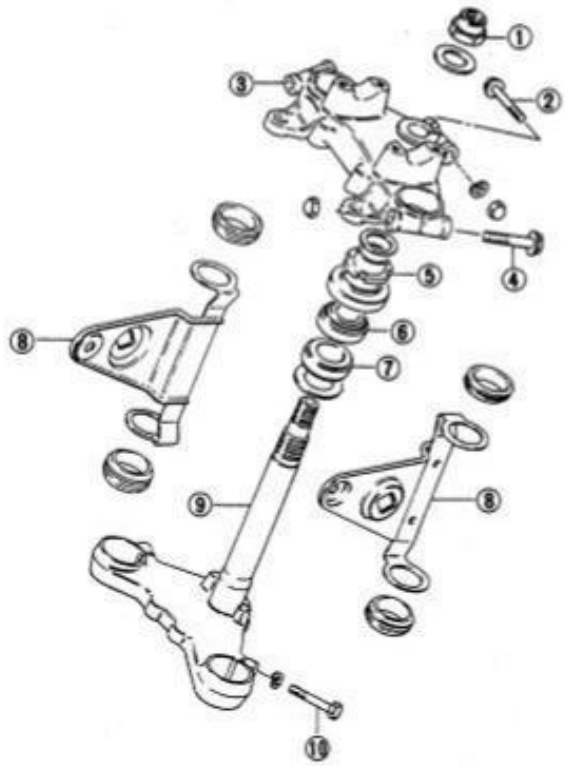

① Steering stem head nut
② Steering stem clamp bolt
③ Steering stem upper bracket
④ Front fork upper clamp bolt
⑤ Steering stem nut
⑥ Upper bearing
⑦ Lower bearing
⑧ Headlight bracket
⑨ Steering stem lower bracket
⑩ Front fork lower clamp bolt

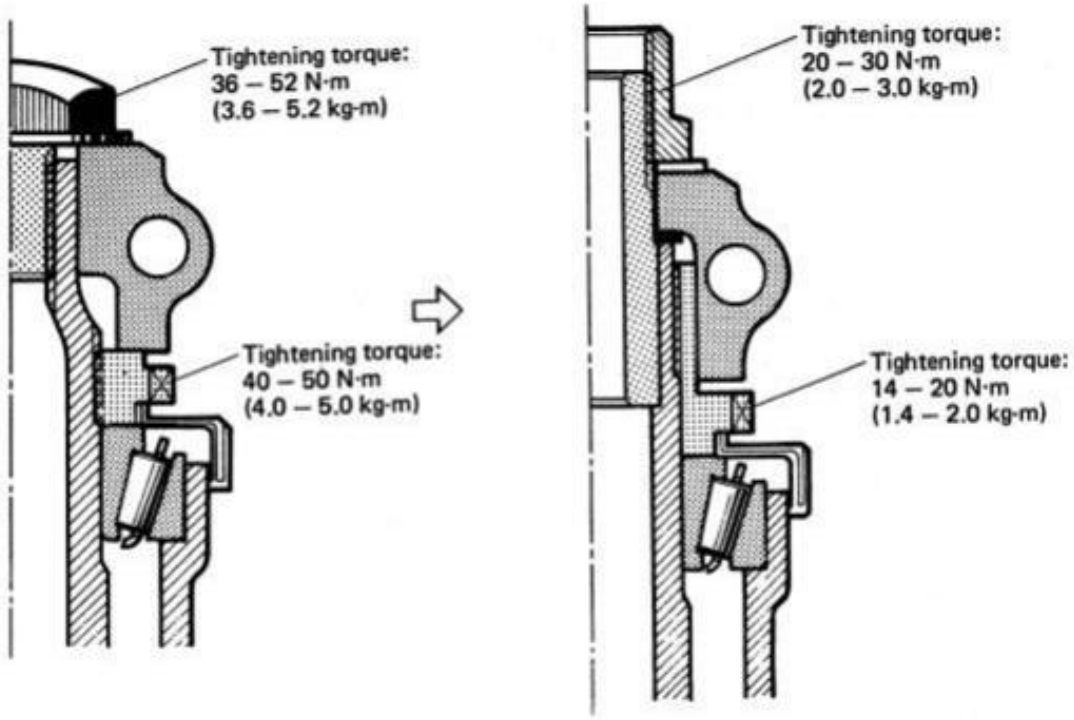

SERVICE DATA
GS550 AND GS550E

VALVE + GUIDE

Unit: mm (in)

ITEM		STANDARD	LIMIT
Valve diam.	IN.	32.0 (1.26)	———
	EX.	27.0 (1.06)	———
Valve lift	IN.	7.2 (0.283)	———
	EX.	7.0 (0.276)	———
Tappet clearance (when cold)	IN. & EX.	0.03 – 0.08 (0.001 – 0.003)	———
Valve guide to valve stem clearance	IN.	0.020 – 0.050 (0.0008 – 0.0020)	0.35 (0.014)
	EX.	0.030 – 0.060 (0.0012 – 0.0024)	0.35 (0.014)
Valve guide I.D.	IN. & EX.	7.000 – 7.015 (0.2756 – 0.2762)	———
Valve stem O.D.	IN.	6.965 – 6.980 (0.2742 – 0.2748)	———
	EX.	6.955 – 6.970 (0.2738 – 0.2744)	———
Valve stem runout	IN. & EX.	———	0.05 (0.002)
Valve head thickness	IN. & EX.	———	0.5 (0.02)
Valve stem end length	IN. & EX.	———	4.0 (0.16)
Valve seat width	IN. & EX.	0.9 – 1.1 (0.035 – 0.043)	———
Valve head radial runout	IN. & EX.	———	0.03 (0.001)
Valve spring free length (IN. & EX.)	INNER	———	33.9 (1.33)
	OUTER	———	41.3 (1.63)
Valve spring tension (IN. & EX.)	INNER	8.9 – 12.5 kg (19.6 – 27.6 lbs) at length 31 mm (1.2 in)	———
	OUTER	22.1 – 27.1 kg (48.7 – 59.7 lbs) at length 35 mm (1.4 in)	———

CAMSHAFT + CYLINDER HEAD

Unit: mm (in)

ITEM	STANDARD		LIMIT
Cam height	IN.	35.485 – 35.515 (1.3970 – 1.3982)	35.190 (1.3854)
	EX.	35.285 – 35.315 (1.3892 – 1.3904)	34.990 (1.3776)
Camshaft journal oil clearance	IN. & EX.	0.020 – 0.054 (0.0008 – 0.0021)	0.150 (0.0059)
Camshaft journal holder I.D.	IN. & EX.	22.000 – 22.013 (0.8661 – 0.8667)	———
Camshaft journal O.D.	IN. & EX.	21.959 – 21.980 (0.8645 – 0.8654)	———
Camshaft runout	IN. & EX.	———	0.10 (0.004)
Cam chain 20 pitch length		———	157.8 (6.213)
Cam chain pin (at arrow "3")		20 th pin	———
Cylinder head distortion		———	0.2 (0.008)

CYLINDER + PISTON + PISTON RING

Unit: mm (in)

ITEM	STANDARD	LIMIT
Compression pressure	9.0 – 13.0 kg/cm² (128 – 185 psi)	7.0 kg/cm² (100 psi)
Compression pressure difference	———	2 kg/cm² (28 psi)
Piston to cylinder clearance	0.045 – 0.055 (0.0018 – 0.0022)	0.120 (0.0047)
Cylinder bore	56.000 – 56.015 (2.2047 – 2.2053)	56.085 (2.2081)
Piston diam.	55.950 – 55.965 (2.2028 – 2.2033) Measure at the 15 (0.59) from skirt end.	55.880 (2.2000)
Cylinder distortion	———	0.26 (0.008)

Unit: mm (in)

ITEM	STANDARD			LIMIT
Piston ring free end gap	1st	N	Approx. 6.5 (0.26)	5.2 (0.20)
		T	Approx. 6.5 (0.26)	5.2 (0.20)
	2nd	N	Approx. 6.5 (0.26)	5.2 (0.20)
		T	Approx. 6.5 (0.26)	5.2 (0.20)
Piston ring end gap	1st		0.1 – 0.3 (0.004 – 0.012)	0.70 (0.028)
	2nd		0.1 – 0.3 (0.004 – 0.012)	0.70 (0.028)
Piston ring to groove clearance	1st		———	0.180 (0.0071)
	2nd		———	0.150 (0.0059)
Piston ring groove width	1st		1.21 – 1.23 (0.0476 – 0.0484)	———
	2nd		1.21 – 1.23 (0.0476 – 0.0484)	———
	Oil		2.51 – 2.53 (0.0988 – 0.0996)	———
Piston ring thickness	1st		1.175 – 1.190 (0.0463 – 0.0469)	———
	2nd		1.170 – 1.190 (0.0461 – 0.0469)	———
Piston pin bore			16.002 – 16.008 (0.6300 – 0.6302)	16.030 (0.6311)
Piston pin O.D.			15.995 – 16.000 (0.6297 – 0.6300)	15.980 (0.6291)

CONROD + CRANKSHAFT

Unit: mm (in)

ITEM	STANDARD	LIMIT
Conrod small end I.D.	16.006 – 16.014 (0.6302 – 0.6305)	16.040 (0.6315)
Conrod deflection	———	3.0 (0.12)
Conrod big end side clearance	0.10 – 0.65 (0.004 – 0.026)	1.0 (0.039)
Crankshaft runout	———	0.10 (0.004)

OIL PUMP

ITEM	STANDARD	LIMIT
Oil pump reduction ratio	1.821 (87 / 44 x 35 / 38)	———
Oil pressure (at 60°C, 140°F)	Above 0.1 kg/cm² (1.42 psi) Below 0.3 kg/cm² (4.27 psi) at 3000 r/min.	———

CLUTCH

Unit: mm (in)

ITEM	STANDARD	LIMIT
Clutch cable play	2 – 3 (0.08 – 0.12)	———
Clutch release screw	¼ – ½ Turn back	———
Drive plate thickness	2.9 – 3.1 (0.114 – 0.122)	2.6 (0.10)
Drive plate claw width	11.8 – 12.0 (0.465 – 0.472)	11.0 (0.433)
Driven plate thickness	1.6 ± 0.06 (0.063 ± 0.002)	———
Driven plate distortion	———	0.1 (0.004)
Clutch spring free length	———	36.5 (1.44)

TRANSMISSION + DRIVE CHAIN

Unit: mm (in)

ITEM	STANDARD		LIMIT
Primary reduction ratio	1.977 (87 / 44)		———
Final reduction ratio	3.333 (50 / 15)		———
Gear ratios	Low	2.666 (32 / 12)	———
	2nd	1.777 (32 / 18)	———
	3rd	1.380 (29 / 21)	———
	4th	1.173 (27 / 23)	———
	5th	1.045 (23 / 22)	———
	Top	0.956 (22 / 23)	———
Shift fork to groove clearance	0.1 – 0.3 (0.004 – 0.012)		0.5 (0.020)
Shift fork groove width	5.5 – 5.6 (0.217 – 0.220)		———
Shift fork thickness	5.3 – 5.4 (0.195 – 0.199)		———
Drive chain	Type	D.I.D.: 50HDL TAKASAGO: RK50SHO	———
	Links	110	———
	20 pitch length	———	320.0 (12.60)
Drive chain slack	20 – 30 (0.8 – 1.2)		———

CARBURETOR

Unit: mm (in)

ITEM	SPECIFICATION
Carburetor type	MIKUNI BS32SS, Four
Bore size	32
I. D. No.	47090
Idle r/min.	1100 ± 50 r/min.
Fuel level	5.0 ± 1.0 (0.20 ± 0.04)
Float height	22.4 ± 1.0 (0.88 ± 0.04)
Main jet (M. J.)	# 92.5
Main air jet (M. A. J.)	1.6
Jet needle (J. N.)	5F42–3rd
Needle jet (N. J.)	X–6
Throttle valve	# 135
Pilot jet (P. J.)	# 40
By pass (B. P.)	1.0, 0.8, 0.8
Pilot outlet (P. O.)	0.7
Valve seat (V. S.)	2.0
Starter jet (G. S.)	#35
Pilot screw (P. S.)	PRE–SET
Pilot air jet (P. A. J.)	# 120
Throttle cable play	0.5 – 1.0 (0.02 – 0.04)
Choke cable play	0.5 – 1.0 (0.02 – 0.04)

ELECTRICAL

Unit: mm (in)

ITEM	SPECIFICATION		
Ignition timing	15° B.T.D.C. Below 1500 ± 100 r/min and 40° B.T.D.C. Above 2350 ± 100 r/min.		
Firing order	1, 2, 4, 3		
Spark plug	Type	NGK B8ES or N.D.W24ES–U	
	Gap	0.6 – 0.8 (0.024 – 0.031)	
Spark performance	Over 8 (0.3) at 1 atm		
Signal coil resistance	Approx. 60 – 80 Ω		
Ignition coil resistance	Primary	O/W – W or B/Y Approx. 3 – 5 Ω	
	Secondary	Plug cap – Plug cap Approx. 30 – 35 kΩ	
Generator no-load voltage	More than 80 V (AC) at 5000 r/min.		
Regulated voltage	14.0 – 15.5 V at 5000 r/min.		
Starter motor	Brush length	N. D.	Limit 6 (0.24)
	Commutator under cut		Limit 0.2 (0.008)
Starter relay resistance	Approx. 3 – 4 Ω		
Battery	Type designation	YB10L –A2	
	Capacity	12V 43.2kC (12Ah)/10HR	
	Standard electrolyte S. G.	1.28 at 20°C (68°F)	
Fuse size	Main	15 A	
	Headlight	10 A	
	Turn signal	10 A	
	Ignition	10 A	
	Power source	10 A	

BRAKE + WHEEL

Unit: mm (in)

ITEM		STANDARD	LIMIT
Rear brake pedal free travel (Drum brake model)		20 – 30 (0.8 – 1.2)	———
Rear brake pedal height		20 (0.8)	———
Brake drum I.D.	Rear	———	180.7 (7.11)
Brake lining thickness		———	1.5 (0.06)
Brake disc thickness	Front	6.0 ± 0.2 (0.24 ± 0.008)	5.5 (0.22)
	Rear	6.7 ± 0.2 (0.26 ± 0.008)	6.0 (0.24)
Brake disc runout		———	0.30 (0.012)
Master cylinder bore	Front	14.000 – 14.043 (0.5512 – 0.5529)	———
	Rear	14.000 – 14.043 (0.5512 – 0.5529)	
Master cylinder piston diam.	Front	13.941 – 13.968 (0.5489 – 0.5499)	———
	Rear	13.957 – 13.984 (0.5495 – 0.5506)	
Brake caliper cylinder bore	Front	42.860 – 42.899 (1.6874 – 1.6889)	———
	Rear	38.180 – 38.256 (1.5031 – 1.5061)	
Brake caliper piston diam.	Front	42.785 – 42.810 (1.6844 – 1.6854)	———
	Rear	38.098 – 38.148 (1.4999 – 1.5019)	

Unit: mm (in)

ITEM	STANDARD		LIMIT
Wheel rim runout	Axial	———	2.0 (0.08)
	Radial	———	2.0 (0.08)
Wheel axle runout	Front	———	0.25 (0.010)
	Rear	———	0.25 (0.010)
Tire size	Front	3.25H19 4PR	———
	Rear	3.75H18 4PR	———
Tire tread depth	Front	———	1.6 (0.06)
	Rear	———	2.0 (0.08)

SUSPENSION

Unit: mm (in)

ITEM	STANDARD		LIMIT
Front fork stroke	150 (5.9)		———
Front fork spring free length	Short	———	92.9 (3.66)
	Long	———	396.4 (15.61)
Front fork oil level	201 (7.91)		———
Rear wheel travel	100 (3.94)		———
Swing arm pivot shaft runout	———		0.3 (0.012)

FUEL + OIL

ITEM	SPECIFICATION
Fuel type	Use gasoline with an octane number of 85 – 95 (Research Method), Preferably unleaded or low-lead type
Fuel tank including reserve	16 L (4.2 / 3.5 US/Imp gal)
	4.0 L (4.2 / 3.5 US/Imp qt)
Engine oil type	SAE 10W/40
Engine oil capacity	Change 2400 ml (2.5 / 2.1 US/Imp qt)
	Filter change 2600 ml (2.7 / 2.3 US/Imp qt)
	Overhaul 2700 ml (2.8 / 2.4 US/Imp qt)
Front fork oil type	Fork oil #15 or SAE 10W/30 : A.T.F. = 1:1
Front fork oil capacity (each leg)	190 ml (6.42 / 6.69 US/Imp oz)
Brake fluid type	SAE J1703, DOT3 or DOT4

TIRE PRESSURE

COLD INFLATION TIRE PRESSURE	NORMAL RIDING						CONTINUOUS HIGH SPEED RIDING					
	SOLO RIDING			DUAL RIDING			SOLO RIDING			DUAL RIDING		
	kPa	kg/cm²	psi	kPa	kg/cm²	psi	kPa	kg/cm²	psi	kPa	kg/cm²	psi
FRONT	175	1.75	25	175	1.75	25	200	2.00	28	200	2.00	28
REAR	200	2.00	28	250	2.50	36	225	2.25	32	280	2.80	40

WATTAGE

(W)

ITEM		SPECIFICATION
Headlight	HI	60
	LO	55
Tail/Brake light		8/23
Turn signal light		23
Speedometer light		3.4
Tachometer light		3.4
Turn signal indicator light		3.4
High beam indicator light		3.4
Neutral indicator light		3.4
Oil pressure indicator light		3.4
Gear position indicator light		1.4

GS550L

VALVE + GUIDE

Unit: mm (in)

ITEM		STANDARD	LIMIT
Valve diam.	IN.	32.0 (1.26)	———
	EX.	27.0 (1.06)	———
Valve lift	IN.	7.2 (0.283)	———
	EX.	7.0 (0.276)	———
Tappet clearance (when cold)	IN. & EX.	0.03 – 0.08 (0.001 – 0.003)	———
Valve guide to valve stem clearance	IN.	0.020 – 0.050 (0.0008 – 0.0020)	0.35 (0.014)
	EX.	0.030 – 0.060 (0.0012 – 0.0024)	0.35 (0.014)
Valve guide I.D.	IN. & EX.	7.000 – 7.015 (0.2756 – 0.2762)	———
Valve stem O.D.	IN.	6.965 – 6.980 (0.2742 – 0.2748)	———
	EX.	6.955 – 6.970 (0.2738 – 0.2744)	———
Valve stem runout	IN. & EX.	———	0.05 (0.002)
Valve head thickness	IN. & EX.	———	0.5 (0.02)
Valve stem end length	IN. & EX.	———	4.0 (0.16)
Valve seat width	IN. & EX.	0.9 – 1.1 (0.035 – 0.043)	———
Valve head radial runout	IN. & EX.	———	0.03 (0.001)
Valve spring free length (IN. & EX.)	INNER	———	33.9 (1.33)
	OUTER	———	41.3 (1.63)
Valve spring tension (IN. & EX.)	INNER	8.9 – 12.5 kg (19.6 – 27.6 lbs) at length 31 mm (1.2 in)	———
	OUTER	22.1 – 27.1 kg (48.7 – 59.7 lbs) at length 35 mm (1.4 in)	———

CAMSHAFT + CYLINDER HEAD

Unit: mm (in)

ITEM	STANDARD		LIMIT
Cam height	IN.	35.485 – 35.515 (1.3970 – 1.3982)	35.190 (1.3854)
	EX.	35.285 – 35.315 (1.3892 – 1.3904)	34.990 (1.3776)
Camshaft journal oil clearance	IN. & EX.	0.020 – 0.054 (0.0008 – 0.0021)	0.150 (0.0059)
Camshaft journal holder I.D.	IN. & EX.	22.000 – 22.013 (0.8661 – 0.8667)	———
Camshaft journal O.D.	IN. & EX.	21.959 – 21.980 (0.8645 – 0.8654)	———
Camshaft runout	IN. & EX.	———	0.10 (0.004)
Cam chain 20 pitch length		———	157.8 (6.213)
Cam chain pin (at arrow "3")		20 th pin	———
Cylinder head distortion		———	0.2 (0.008)

CYLINDER + PISTON + PISTON RING

Unit: mm (in)

ITEM	STANDARD	LIMIT
Compression pressure	9.0 – 13.0 kg/cm² (128 – 185 psi)	7.0 kg/cm² (100 psi)
Compression pressure difference	———	2 kg/cm² (28 psi)
Piston to cylinder clearance	0.045 – 0.055 (0.0018 – 0.0022)	0.120 (0.0047)
Cylinder bore	56.000 – 56.015 (2.2047 – 2.2053)	56.085 (2.2081)
Piston diam.	55.950 – 55.965 (2.2028 – 2.2033) Measure at the 15 (0.59) from skirt end.	55.880 (2.2000)
Cylinder distortion	———	0.26 (0.008)

Unit: mm (in)

ITEM	STANDARD			LIMIT
Piston ring free end gap	1st	N	Approx. 6.5 (0.26)	5.2 (0.20)
		T	Approx. 6.5 (0.26)	5.2 (0.20)
	2nd	N	Approx. 6.5 (0.26)	5.2 (0.20)
		T	Approx. 6.5 (0.26)	5.2 (0.20)
Piston ring end gap	1st		0.1 – 0.3 (0.004 – 0.012)	0.70 (0.028)
	2nd		0.1 – 0.3 (0.004 – 0.012)	0.70 (0.028)
Piston ring to groove clearance	1st		———	0.180 (0.0071)
	2nd		———	0.150 (0.0059)
Piston ring groove width	1st		1.21 – 1.23 (0.0476 – 0.0484)	———
	2nd		1.21 – 1.23 (0.0476 – 0.0484)	———
	Oil		2.51 – 2.53 (0.0988 – 0.0996)	———
Piston ring thickness	1st		1.175 – 1.190 (0.0463 – 0.0469)	———
	2nd		1.170 – 1.190 (0.0461 – 0.0469)	———
Piston pin bore			16.002 – 16.008 (0.6300 – 0.6302)	16.030 (0.6311)
Piston pin O.D.			15.995 – 16.000 (0.6297 – 0.6300)	15.980 (0.6291)

CONROD + CRANKSHAFT

Unit: mm (in)

ITEM	STANDARD	LIMIT
Conrod small end I.D.	16.006 – 16.014 (0.6302 – 0.6305)	16.040 (0.6315)
Conrod deflection	———	3.0 (0.12)
Conrod big end side clearance	0.10 – 0.65 (0.004 – 0.026)	1.0 (0.039)
Crankshaft runout	———	0.10 (0.004)

OIL PUMP

ITEM	STANDARD	LIMIT
Oil pump reduction ratio	1.821 (87 / 44 x 35 / 38)	———
Oil pressure (at 60°C, 140°F)	Above 0.1 kg/cm² (1.42 psi) Below 0.3 kg/cm² (4.27 psi) at 3000 r/min.	———

CLUTCH

Unit: mm (in)

ITEM	STANDARD	LIMIT
Clutch cable play	2 – 3 (0.08 – 0.12)	———
Clutch release screw	¼ – ½ Turn back	———
Drive plate thickness	2.9 – 3.1 (0.114 – 0.122)	2.6 (0.10)
Drive plate claw width	11.8 – 12.0 (0.465 – 0.472)	11.0 (0.433)
Driven plate thickness	1.6 ± 0.06 (0.063 ± 0.002)	———
Driven plate distortion	———	0.1 (0.004)
Clutch spring free length	———	36.5 (1.44)

TRANSMISSION + DRIVE CHAIN

Unit: mm (in)

ITEM	STANDARD		LIMIT
Primary reduction ratio	1.977 (87 / 44)		———
Final reduction ratio	3.266 (49 / 15)		———
Gear ratios	Low	2.666 (32 / 12)	———
	2nd	1.777 (32 / 18)	———
	3rd	1.380 (29 / 21)	———
	4th	1.173 (27 / 23)	———
	5th	1.045 (23 / 23)	———
	Top	0.956 (22 / 23)	———
Shift fork to groove clearance	0.1 – 0.3 (0.004 – 0.012)		0.5 (0.020)
Shift fork groove width	5.5 – 5.6 (0.217 – 0.220)		———
Shift fork thickness	5.3 – 5.4 (0.195 – 0.199)		———
Drive chain	Type	D.I.D.: 50HDL TAKASAGO: RK50SHO	———
	Links	108	———
	20 pitch length		320.0 (12.60)
Drive chain slack	20 – 30 (0.8 – 1.2)		———

CARBURETOR

Unit: mm (in)

ITEM	SPECIFICATION
Carburetor type	MIKUNI BS32SS, Four
Bore size	32
I. D. No.	47090
Idle r/min.	1100 ± 50 r/min.
Fuel level	5.0 ± 1.0 (0.20 ± 0.04)
Float height	22.4 ± 1.0 (0.88 ± 0.04)
Main jet (M. J.)	# 92.5
Main air jet (M. A. J.)	1.6
Jet needle (J. N.)	5F42-3rd
Needle jet (N. J.)	X–6
Throttle valve	# 135
Pilot jet (P. J.)	# 40
By pass (B. P.)	1.0, 0.8, 0.8
Pilot outlet (P. O.)	0.7
Valve seat (V. S.)	2.0
Starter jet (G. S.)	#35
Pilot screw (P. S.)	PRE–SET
Pilot air jet (P. A. J.)	# 120
Throttle cable play	0.5 – 1.0 (0.02 – 0.04)
Choke cable play	0.5 – 1.0 (0.02 – 0.04)

ELECTRICAL

Unit: mm (in)

ITEM	SPECIFICATION		
Ignition timing	15° B.T.D.C. Below 1500 ± 100 r/min and 40° B.T.D.C. Above 2350 ± 100 r/min.		
Firing order	1, 2, 4, 3		
Spark plug	Type	NGK B8ES or N.D. W24ES–U	
	Gap	0.6 – 0.8 (0.024 – 0.031)	
Spark performance	Over 8 (0.3) at 1 atm		
Signal coil resistance	Approx. 60 – 80 Ω		
Ignition coil resistance	Primary	O/W – W or B/Y Approx. 3 – 5 Ω	
	Secondary	Plug cap – Plug cap Approx. 30 – 35 kΩ	
Generator no-load voltage	More than 80 V (AC) at 5000 r/min.		
Regulated voltage	14.0 – 15.5 V at 5000 r/min.		
Starter motor	Brush length	N. D.	Limit 6 (0.24)
	Commutator under cut		Limit 0.2 (0.008)
Starter relay resistance	Approx. 3 – 4 Ω		
Battery	Type designation	YB10L –A2	
	Capacity	12V 43.2kC (12Ah)/10HR	
	Standard electrolyte S. G.	1.28 at 20°C (68°F)	
Fuse size	Main	15 A	
	Headlight	10 A	
	Turn signal	10 A	
	Ignition	10 A	
	Power source	10 A	

BRAKE + WHEEL

Unit: mm (in)

ITEM		STANDARD	LIMIT
Rear brake pedal height		20 (0.8)	
Brake disc thickness	Front	6.0 ± 0.2 (0.24 ± 0.008)	5.5 (0.22)
	Rear	6.7 ± 0.2 (0.26 ± 0.008)	6.0 (0.24)
Brake disc runout		———	0.30 (0.012)
Master cylinder bore	Front	14.000 – 14.043 (0.5512 – 0.5529)	———
	Rear	14.000 – 14.043 (0.5512 – 0.5529)	———
Master cylinder piston diam.	Front	13.941 – 13.968 (0.5489 – 0.5499)	———
	Rear	13.957 – 13.984 (0.5495 – 0.5506)	———
Brake caliper cylinder bore	Front	42.860 – 42.899 (1.6874 – 1.6889)	———
	Rear	38.180 – 38.256 (1.5031 – 1.5061)	———
Brake caliper piston diam.	Front	42.785 – 42.810 (1.6844 – 1.6854)	———
	Rear	38.098 – 38.148 (1.4999 – 1.5015)	———
Wheel rim runout	Axial	———	2.0 (0.08)
	Radial	———	2.0 (0.08)
Wheel axle runout	Front	———	0.25 (0.010)
	Rear	———	0.25 (0.010)

Unit: mm (in)

ITEM	STANDARD		LIMIT
Tire size	Front	90/90 – 19 52H	———
	Rear	130/90 – 16 67H	———
Tire tread depth	Front	———	1.6 (0.06)
	Rear	———	2.0 (0.08)

SUSPENSION

Unit: mm (in)

ITEM	STANDARD		LIMIT
Front fork stroke	160 (6.3)		———
Front fork spring free length	Short	———	159.1 (6.26)
	Long	———	448.7 (17.67)
Front fork oil level	208 (8.19)		———
Rear wheel travel	95 (3.74)		———
Swing arm pivot shaft runout	———		0.3 (0.012)

FUEL + OIL

ITEM		SPECIFICATION
Fuel type		Use gasoline with an octane number of 85 –95 (Research Method), preferably unleaded or low-lead type.
Fuel tank including reserve		12 L (3.2 / 2.6 US/Imp gal)
reserve		4.0 L (4.2 / 3.5 US/Imp qt)
Engine oil type		SAE 10W/40
Engine oil capacity	Change	2400 ml (2.5 / 2.1 US/Imp qt)
	Filter change	2600 ml (2.7 / 2.3 US/Imp qt)
	Overhaul	2700 ml (2.8 / 2.4 US/Imp qt)
Front fork oil type		Fork oil #15 or SAE 10W/30 : A.T.F. = 1:1
Front fork oil capacity (each leg)		249 ml (8.42 / 8.77 US/Imp oz)
Brake fluid type		SAE J1703, DOT3 or DOT4

TIRE PRESSURE

COLD INFLATION TIRE PRESSURE	NORMAL RIDING						CONTINUOUS HIGH SPEED RIDING					
	SOLO RIDING			DUAL RIDING			SOLO RIDING			DUAL RIDING		
	kPa	kg/cm²	psi	kPa	kg/cm²	psi	kPa	kg/cm²	psi	kPa	kg/cm²	psi
FRONT	200	2.00	28	225	2.25	32	200	2.00	28	250	2.50	36
REAR	200	2.00	28	225	2.25	32	225	2.25	32	280	2.80	40

WATTAGE

(W)

ITEM		SPECIFICATION
Headlight	HI	60
	LO	55
Tail/Brake light		8/23
Turn signal light		23
Speedometer light		3.4
Tachometer light		3.4
Turn signal indicator light		3.4
High beam indicator light		3.4
Neutral indicator light		3.4
Oil pressure indicator light		3.4
Fuel meter light		3.4
Gear position indicator light		1.4

GS550T

VALVE + GUIDE

Unit: mm (in)

ITEM		STANDARD	LIMIT
Valve diam.	IN.	32.0 (1.26)	———
	EX.	27.0 (1.06)	———
Valve lift	IN.	7.2 (0.283)	———
	EX.	7.0 (0.276)	———
Tappet clearance (when cold)	IN. & EX.	0.03 – 0.08 (0.001 – 0.003)	———
Valve guide to valve stem clearance	IN.	0.020 – 0.050 (0.0008 – 0.0020)	0.35 (0.014)
	EX.	0.030 – 0.060 (0.0012 – 0.0024)	0.35 (0.014)
Valve guide I.D.	IN. & EX.	7.000 – 7.015 (0.2756 – 0.2762)	———
Valve stem O.D.	IN.	6.965 – 6.980 (0.2742 – 0.2748)	———
	EX.	6.955 – 6.970 (0.2738 – 0.2744)	———
Valve stem runout	IN. & EX.	———	0.05 (0.002)
Valve head thickness	IN. & EX.	———	0.5 (0.02)
Valve stem end length	IN. & EX.	———	4.0 (0.16)
Valve seat width	IN. & EX.	0.9 – 1.1 (0.035 – 0.043)	———
Valve head radial runout	IN. & EX.	———	0.03 (0.001)
Valve spring free length (IN. & EX.)	INNER	———	33.9 (1.33)
	OUTER	———	41.3 (1.63)
Valve spring tension (IN. & EX.)	INNER	8.9 – 12.5 kg (19.6 – 27.6 lbs) at length 31 mm (1.2 in)	———
	OUTER	22.1 – 27.1 kg (48.7 – 59.7 lbs) at length 35 mm (1.4 in)	———

CAMSHAFT + CYLINDER HEAD

Unit: mm (in)

ITEM	STANDARD		LIMIT
Cam height	IN.	35.485 – 35.515 (1.3970 – 1.3982)	35.190 (1.3854)
	EX.	35.285 – 35.315 (1.3892 – 1.3904)	34.990 (1.3776)
Camshaft journal oil clearance	IN. & EX.	0.020 – 0.054 (0.0008 – 0.0021)	0.150 (0.0059)
Camshaft journal holder I.D.	IN. & EX.	22.000 – 22.013 (0.8661 – 0.8667)	———
Camshaft journal O.D.	IN. & EX.	21.959 – 21.980 (0.8645 – 0.8654)	———
Camshaft runout	IN. & EX.	———	0.10 (0.004)
Cam chain 20 pitch length		———	157.8 (6.213)
Cam chain pin (at arrow "3")		20 th pin	———
Cylinder head distortion		———	0.2 (0.008)

CYLINDER + PISTON + PISTON RING

Unit: mm (in)

ITEM	STANDARD	LIMIT
Compression pressure	9.0 – 13.0 kg/cm² (128 – 185 psi)	7.0 kg/cm² (100 psi)
Compression pressure difference	———	2 kg/cm² (28 psi)
Piston to cylinder clearance	0.045 – 0.055 (0.0018 – 0.0022)	0.120 (0.0047)
Cylinder bore	56.000 – 56.015 (2.2047 – 2.2053)	56.085 (2.2081)
Piston diam.	55.950 – 55.965 (2.2028 – 2.2033) Measure at the 15 (0.59) from skirt end.	55.880 (2.2000)
Cylinder distortion	———	0.26 (0.008)

Unit: mm (in)

ITEM	STANDARD			LIMIT
Piston ring free end gap	1st	N	Approx. 6.5 (0.26)	5.2 (0.20)
		T	Approx. 6.5 (0.26)	5.2 (0.20)
	2nd	N	Approx. 6.5 (0.26)	5.2 (0.20)
		T	Approx. 6.5 (0.26)	5.2 (0.20)
Piston ring end gap	1st		0.1 – 0.3 (0.004 – 0.012)	0.70 (0.028)
	2nd		0.1 – 0.3 (0.004 – 0.012)	0.70 (0.028)
Piston ring to groove clearance	1st		———	0.180 (0.0071)
	2nd		———	0.150 (0.0059)
Piston ring groove width	1st		1.21 – 1.23 (0.0476 – 0.0484)	———
	2nd		1.21 – 1.23 (0.0476 – 0.0484)	———
	Oil		2.51 – 2.53 (0.0988 – 0.0996)	———
Piston ring thickness	1st		1.175 – 1.190 (0.0463 – 0.0469)	———
	2nd		1.170 – 1.190 (0.0461 – 0.0469)	———
Piston pin bore			16.002 – 16.008 (0.6300 – 0.6302)	16.030 (0.6311)
Piston pin O.D.			15.995 – 16.000 (0.6297 – 0.6300)	15.980 (0.6291)

CONROD + CRANKSHAFT

Unit: mm (in)

ITEM	STANDARD	LIMIT
Conrod small end I.D.	16.006 – 16.014 (0.6302 – 0.6305)	16.040 (0.6315)
Conrod deflection	———	3.0 (0.12)
Conrod big end side clearance	0.10 – 0.65 (0.004 – 0.026)	1.0 (0.039)
Crankshaft runout	———	0.10 (0.004)

OIL PUMP

ITEM	STANDARD	LIMIT
Oil pump reduction ratio	1.821 (87 / 44 x 35 / 38)	———
Oil pressure (at 60°C, 140°F)	Above 0.1 kg/cm² (1.42 psi) Below 0.3 kg/cm² (4.27 psi) at 3000 r/min.	———

CLUTCH

Unit: mm (in)

ITEM	STANDARD	LIMIT
Clutch cable play	2 – 3 (0.08 – 0.12)	———
Clutch release screw	¼ – ½ Turn back	———
Drive plate thickness	2.9 – 3.1 (0.114 – 0.122)	2.6 (0.10)
Drive plate claw width	11.8 – 12.0 (0.465 – 0.472)	11.0 (0.433)
Driven plate thickness	1.6 ± 0.06 (0.063 ± 0.002)	———
Driven plate distortion	———	0.1 (0.004)
Clutch spring free length	———	36.5 (1.44)

TRANSMISSION + DRIVE CHAIN

Unit: mm (in)

ITEM		STANDARD	LIMIT
Primary reduction ratio		1.977 (87 / 44)	———
Final reduction ratio		3.333 (50 / 15)	———
Gear ratios	Low	2.666 (32 / 12)	———
	2nd	1.777 (32 / 18)	———
	3rd	1.380 (29 / 21)	———
	4th	1.173 (27 / 23)	———
	5th	1.045 (23 / 22)	———
	Top	0.956 (22 / 23)	———
Shift fork to groove clearance		0.1 – 0.3 (0.004 – 0.012)	0.5 (0.020)
Shift fork groove width		5.5 – 5.6 (0.217 – 0.220)	———
Shift fork thickness		5.3 – 5.4 (0.195 – 0.199)	———
Drive chain	Type	D.I.D.: 50HDL TAKASAGO: RK50SHO	———
	Links	110	———
	20 pitch length	———	320.0 (12.60)
Drive chain slack		20 – 30 (0.8 – 1.2)	———

CARBURETOR

Unit: mm (in)

ITEM	SPECIFICATION
Carburetor type	MIKUNI BS32SS, Four
Bore size	32
I. D. No.	47090
Idle r/min.	1100 ± 50 r/min.
Fuel level	5.0 ± 1.0 (0.20 ± 0.04)
Float height	22.4 ± 1.0 (0.88 ± 0.04)
Main jet (M. J.)	# 92.5
Main air jet (M. A. J.)	1.6
Jet needle (J. N.)	5F42–3rd
Needle jet (N. J.)	X–6
Throttle valve	# 135
Pilot jet (P. J.)	# 40
By pass (B. P.)	1.0, 0.8, 0.8
Pilot outlet (P. O.)	0.7
Valve seat (V. S.)	2.0
Starter jet (G. S.)	#35
Pilot screw (P. S.)	PRE–SET
Pilot air jet (P. A. J.)	# 120
Throttle cable play	0.5 – 1.0 (0.02 – 0.04)
Choke cable play	0.5 – 1.0 (0.02 – 0.04)

ELECTRICAL

Unit: mm (in)

ITEM	SPECIFICATION		
Ignition timing	15° B.T.D.C. Below 1500 ± 100 r/min and 40° B.T.D.C. Above 2350 ± 100 r/min.		
Firing order	1, 2, 4, 3		
Spark plug	Type	NGK B8ES or N.D.W24ES–U	
	Gap	0.6 – 0.8 (0.024 – 0.031)	
Spark performance	Over 8 (0.3) at 1 atm		
Signal coil resistance	Approx. 60 – 80 Ω		
Ignition coil resistance	Primary	O/W – W or B/Y Approx. 3 – 5 Ω	
	Secondary	Plug cap – Plug cap Approx. 30 – 35 kΩ	
Generator no-load voltage	More than 80 V (AC) at 5000 r/min.		
Regulated voltage	14.0 – 15.5 V at 5000 r/min.		
Starter motor	Brush length	N. D.	Limit 6 (0.24)
	Commutator under cut		Limit 0.2 (0.008)
Starter relay resistance	Approx. 3 – 4 Ω		
Battery	Type designation	YB10L –A2	
	Capacity	12V 43.2kC (12Ah)/10HR	
	Standard electrolyte S. G.	1.28 at 20°C (68°F)	
Fuse size	Main	15 A	
	Headlight	10 A	
	Turn signal	10 A	
	Ignition	10 A	
	Power source	10 A	

BRAKE + WHEEL

Unit: mm (in)

ITEM		STANDARD	LIMIT
Rear brake pedal height		20 (0.8)	
Brake disc thickness	Front	6.0 ± 0.2 (0.24 ± 0.008)	5.5 (0.22)
	Rear	6.7 ± 0.2 (0.26 ± 0.008)	6.0 (0.24)
Brake disc runout		———	0.30 (0.012)
Master cylinder bore	Front	14.000 – 14.043 (0.5512 – 0.5529)	———
	Rear	14.000 – 14.043 (0.5512 – 0.5529)	———
Master cylinder piston diam.	Front	13.941 – 13.968 (0.5489 – 0.5499)	———
	Rear	13.957 – 13.984 (0.5495 – 0.5506)	———
Brake caliper cylinder bore	Front	42.860 – 42.899 (1.6874 – 1.6889)	———
	Rear	38.180 – 38.256 (1.5031 – 1.5061)	———
Brake caliper piston diam.	Front	42.785 – 42.810 (1.6844 – 1.6854)	———
	Rear	38.098 – 38.148 (1.4999 – 1.5019)	———
Wheel rim runout	Axial	———	2.0 (0.08)
	Radial	———	2.0 (0.08)
Wheel axle runout	Front	———	0.25 (0.010)
	Rear	———	0.25 (0.010)

Unit: mm (in)

ITEM	STANDARD		LIMIT
Tire size	Front	3.25H19 4PR	—
	Rear	4.25H17 4PR	—
Tire tread depth	Front	—	1.6 (0.06)
	Rear	—	2.0 (0.08)

SUSPENSION

Unit: mm (in)

ITEM	STANDARD		LIMIT
Front fork stroke	150 (5.9)		—
Front fork spring free length	Short	—	92.9 (3.66)
	Long	—	396.4 (15.61)
Front fork oil level	201 (7.91)		—
Rear wheel travel	100 (3.94)		—
Swing arm pivot shaft runout	—		0.3 (0.012)

FUEL + OIL

ITEM	SPECIFICATION		
Fuel type	Use gasoline with an octane number of 85 – 95 (Research Method), Preferably unleaded or low-lead type		
Fuel tank including reserve		12 L (3.2 / 2.6 US/Imp gal)	
reserve		4.0 L (4.2 / 3.5 US/Imp qt)	
Engine oil type	SAE 10W/40		
Engine oil capacity	Change	2400 ml (2.5 / 2.1 US/Imp qt)	
	Filter change	2600 ml (2.7 / 2.3 US/Imp qt)	
	Overhaul	2700 ml (2.8 / 2.4 US/Imp qt)	
Front fork oil type	Fork oil #15 or SAE 10W/30 : A.T.F = 1:1		
Front fork oil capacity (each leg)		190 ml (6.42 / 6.69 US/Imp oz)	
Brake fluid type	SAE J1703, DOT3, or DOT4		

TIRE PRESSURE

COLD INFLATION TIRE PRESSURE	NORMAL RIDING						CONTINUOUS HIGH SPEED RIDING					
	SOLO RIDING			DUAL RIDING			SOLO RIDING			DUAL RIDING		
	kPa	kg/cm²	psi	kPa	kg/cm²	psi	kPa	kg/cm²	psi	kPa	kg/cm²	psi
FRONT	175	1.75	25	175	1.75	25	200	2.00	28	200	2.00	28
REAR	200	2.00	28	250	2.50	36	225	2.25	32	280	2.80	40

WATTAGE

(W)

ITEM		SPECIFICATION
Headlight	HI	60
	LO	55
Tail/Brake light		8/23
Turn signal light		23
Speedometer light		3.4
Tachometer light		3.4
Turn signal indicator light		3.4
High beam indicator light		3.4
Neutral indicator light		3.4
Oil pressure indicator light		3.4
Gear position indicator light		1.4

WIRING DIAGRAM

GS550"X"

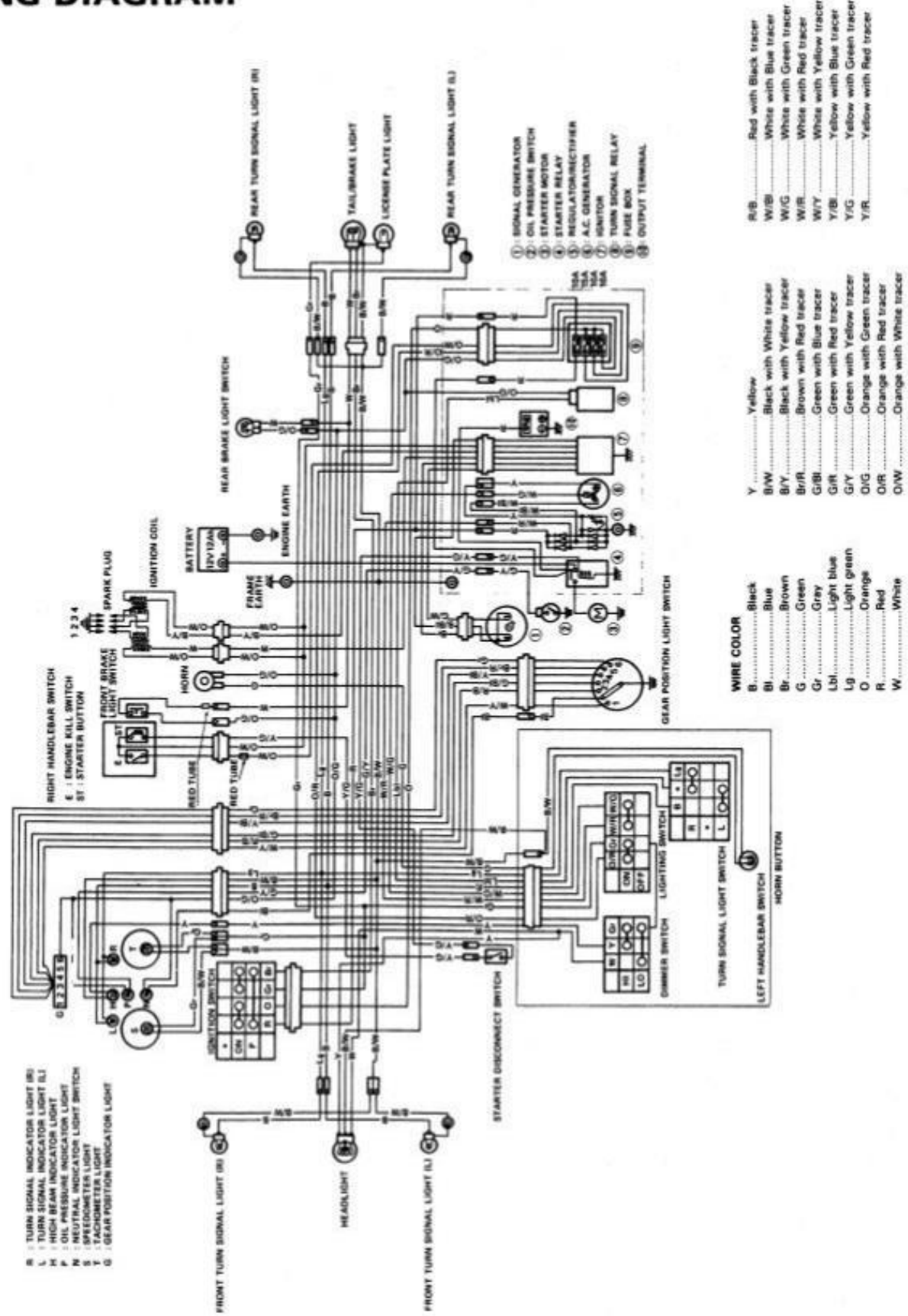

GS550L"X"

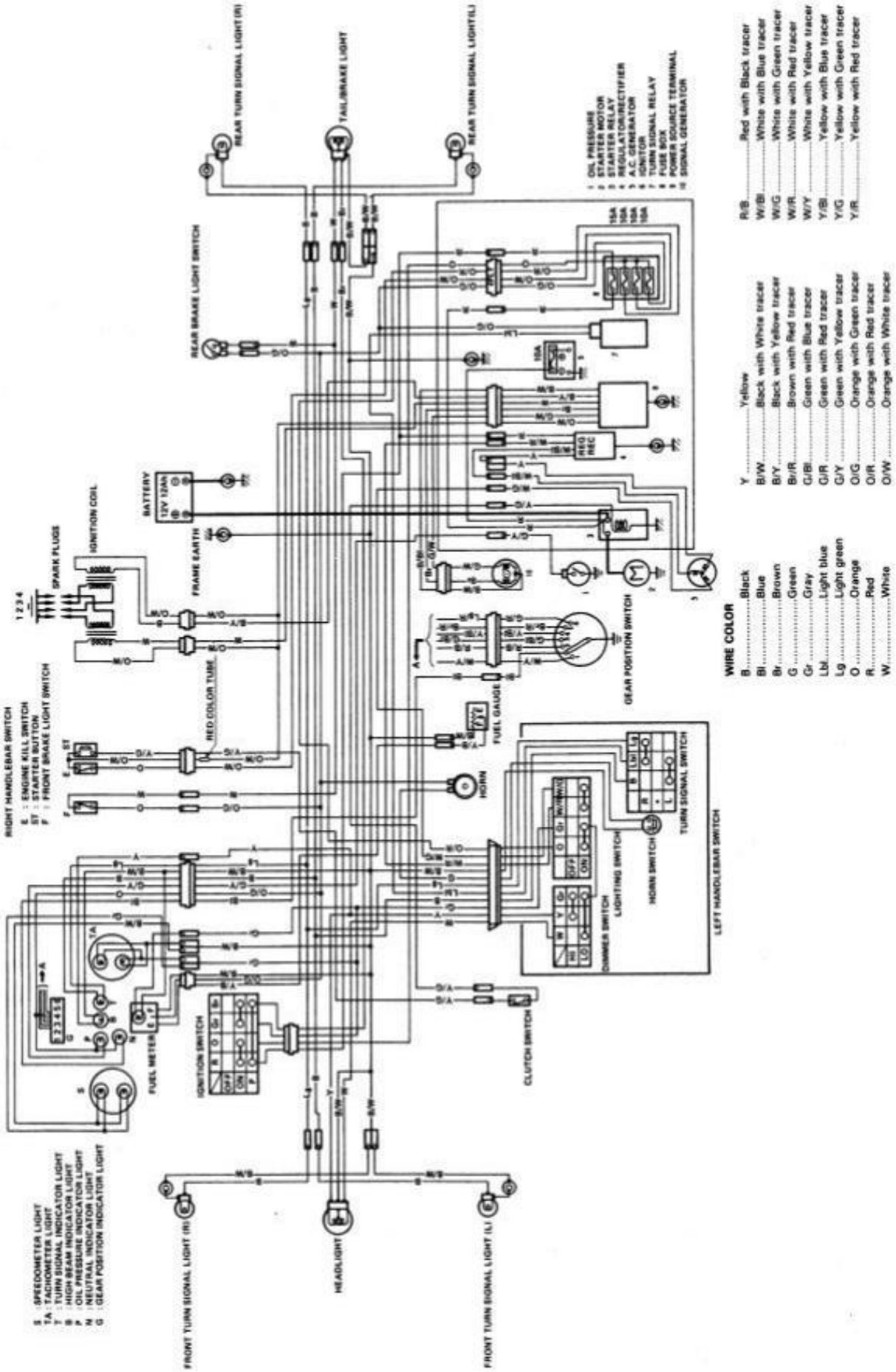
REAR TURN SIGNAL LIGHT (R)
TAIL/BRAKE LIGHT
REAR TURN SIGNAL LIGHT(L)
REAR BRAKE LIGHT SWITCH
1 : OIL PRESSURE
2 : STARTER MOTOR
3 : STARTER RELAY
4 : REGULATOR/RECTIFIER
5 : A.C. GENERATOR
6 : IGNITION COIL
7 : TURN SIGNAL RELAY
8 : FUSE BOX
9 : POWER SOURCE TERMINAL
10 : SIGNAL GENERATOR
BATTERY
12V 12Ah
FRAME EARTH
IGNITION COIL
SPARK PLUGS
1 2 3 4
RED COLOR TUBE
RIGHT HANDLEBAR SWITCH
E : ENGINE KILL SWITCH
ST : STARTER BUTTON
F : FRONT BRAKE LIGHT SWITCH
HORN
FUEL GAUGE
GEAR POSITION SWITCH
TURN SIGNAL SWITCH
HORN SWITCH
LIGHTING SWITCH
DIMMER SWITCH
LEFT HANDLEBAR SWITCH
CLUTCH SWITCH
IGNITION SWITCH
FUEL METER
S : SPEEDOMETER LIGHT
TA : TACHOMETER LIGHT
T : TURN SIGNAL INDICATOR LIGHT
B : HIGH BEAM INDICATOR LIGHT
P : OIL PRESSURE INDICATOR LIGHT
N : NEUTRAL INDICATOR LIGHT
G : GEAR POSITION INDICATOR LIGHT
FRONT TURN SIGNAL LIGHT (R)
HEADLIGHT
FRONT TURN SIGNAL LIGHT (L)
WIRE COLOR
B .....Black
Bl .....Blue
Br .....Brown
G .....Green
Gr .....Gray
Lbl .....Light blue
Lg .....Light green
O .....Orange
R .....Red
W .....White
Y .....Yellow
B/W .....Black with White tracer
B/Y .....Black with Yellow tracer
Br/R .....Brown with Red tracer
G/Bl .....Green with Blue tracer
G/R .....Green with Red tracer
G/Y .....Green with Yellow tracer
O/G .....Orange with Green tracer
O/R .....Orange with Red tracer
O/W .....Orange with White tracer
R/B .....Red with Black tracer
W/Bl .....White with Blue tracer
W/G .....White with Green tracer
W/R .....White with Red tracer
W/Y .....White with Yellow tracer
Y/Bl .....Yellow with Blue tracer
Y/G .....Yellow with Green tracer
Y/R .....Yellow with Red tracer

GS550T"X"

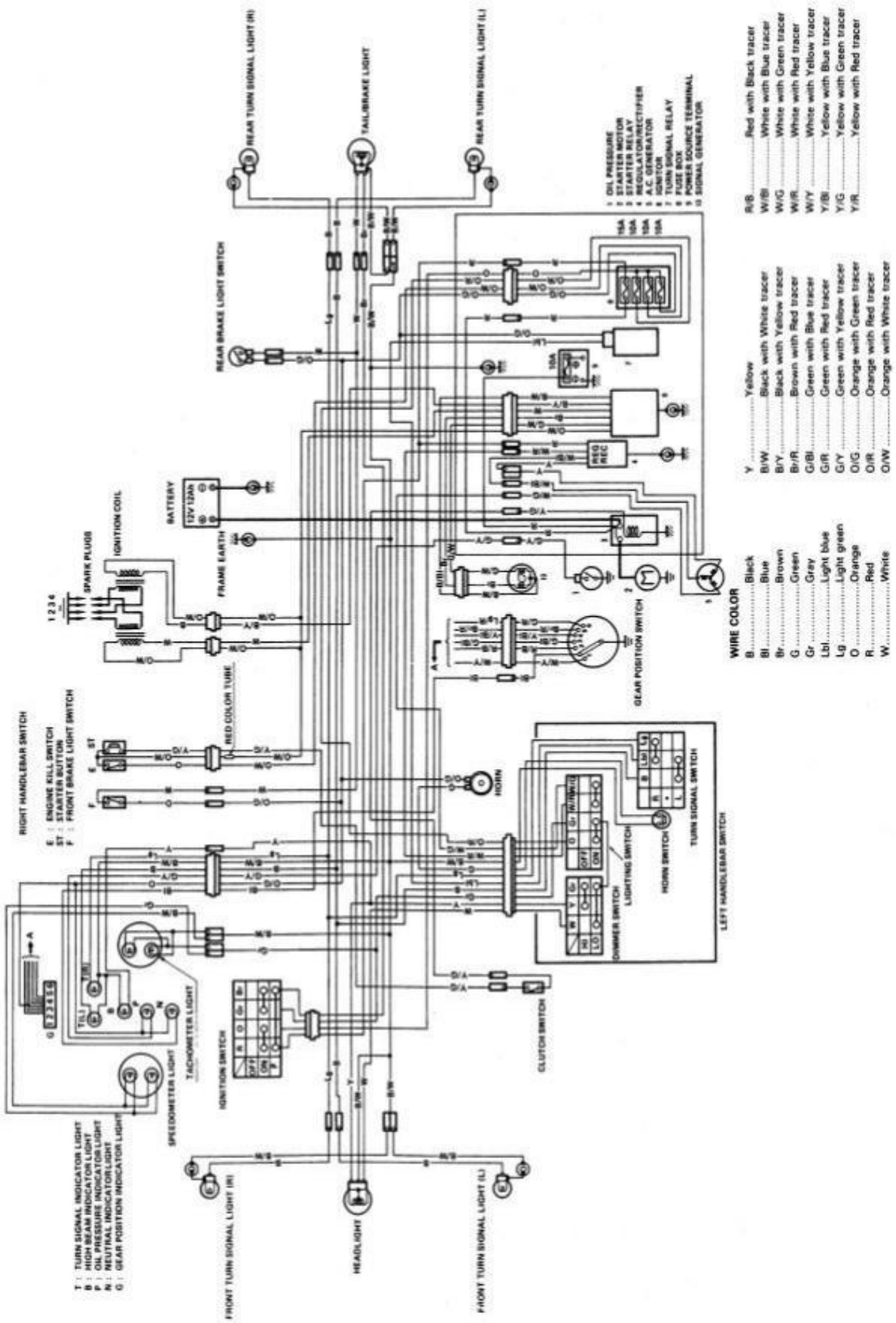
REAR TURN SIGNAL LIGHT (R)
TAIL/BRAKE LIGHT
REAR TURN SIGNAL LIGHT (L)
1 : OIL PRESSURE
2 : STARTER MOTOR
3 : STARTER RELAY
4 : REGULATOR/RECTIFIER
5 : A.C. GENERATOR
6 : IGNITOR
7 : TURN SIGNAL RELAY
8 : FUSE BOX
9 : POWER SOURCE TERMINAL
10 : SIGNAL GENERATOR
REAR BRAKE LIGHT SWITCH
BATTERY
12V 12Ah
FRAME EARTH
IGNITION COIL
SPARK PLUGS
1 2 3 4
RED COLOR TUBE
GEAR POSITION SWITCH
RIGHT HANDLEBAR SWITCH
E : ENGINE KILL SWITCH
ST : STARTER BUTTON
F : FRONT BRAKE LIGHT SWITCH
HORN
TURN SIGNAL SWITCH
HORN SWITCH
LIGHTING SWITCH
DIMMER SWITCH
LEFT HANDLEBAR SWITCH
CLUTCH SWITCH
IGNITION SWITCH
TACHOMETER LIGHT
SPEEDOMETER LIGHT
T : TURN SIGNAL INDICATOR LIGHT
B : HIGH BEAM INDICATOR LIGHT
P : OIL PRESSURE INDICATOR LIGHT
N : NEUTRAL INDICATOR LIGHT
G : GEAR POSITION INDICATOR LIGHT
FRONT TURN SIGNAL LIGHT (R)
HEADLIGHT
FRONT TURN SIGNAL LIGHT (L)
WIRE COLOR
B ..... Black
Bl ..... Blue
Br ..... Brown
G ..... Green
Gr ..... Gray
Lbl ..... Light blue
Lg ..... Light green
O ..... Orange
R ..... Red
W ..... White
Y ..... Yellow
B/W ..... Black with White tracer
B/Y ..... Black with Yellow tracer
Br/R ..... Brown with Red tracer
G/Bl ..... Green with Blue tracer
G/R ..... Green with Red tracer
G/Y ..... Green with Yellow tracer
O/G ..... Orange with Green tracer
O/R ..... Orange with Red tracer
O/W ..... Orange with White tracer
R/B ..... Red with Black tracer
W/Bl ..... White with Blue tracer
W/G ..... White with Green tracer
W/R ..... White with Red tracer
W/Y ..... White with Yellow tracer
Y/Bl ..... Yellow with Blue tracer
Y/G ..... Yellow with Green tracer
Y/R ..... Yellow with Red tracer

CABLE ROUTING

GS550 AND GS550E

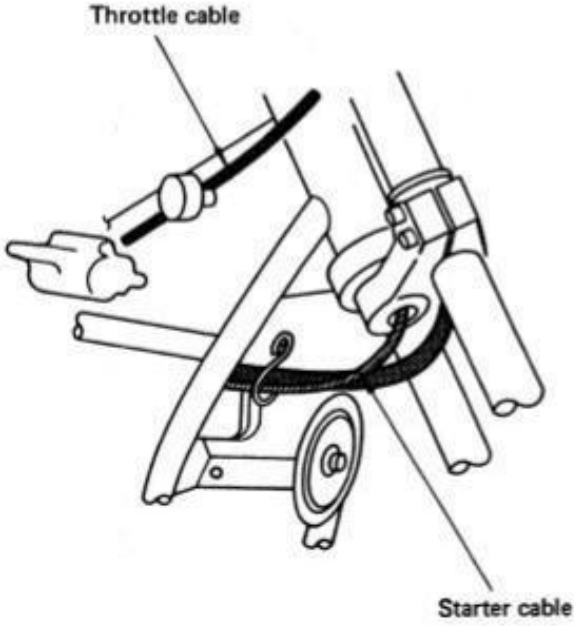

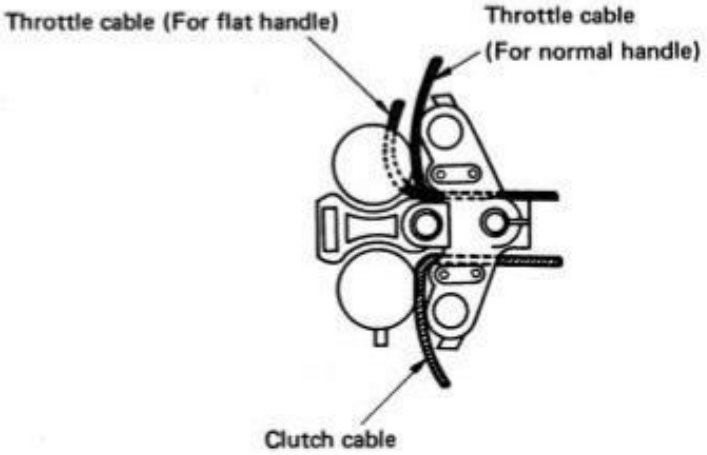

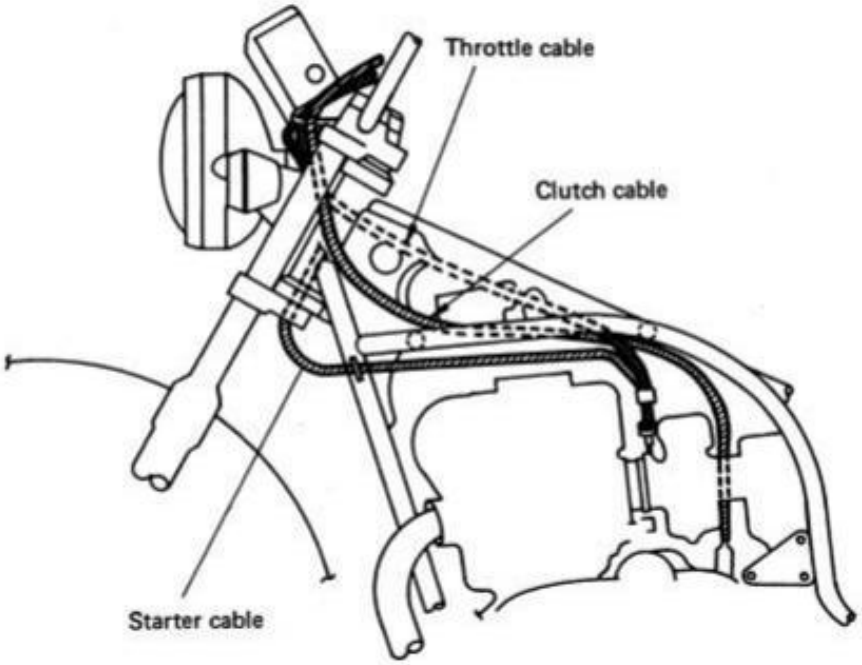

GS550T AND GS550L

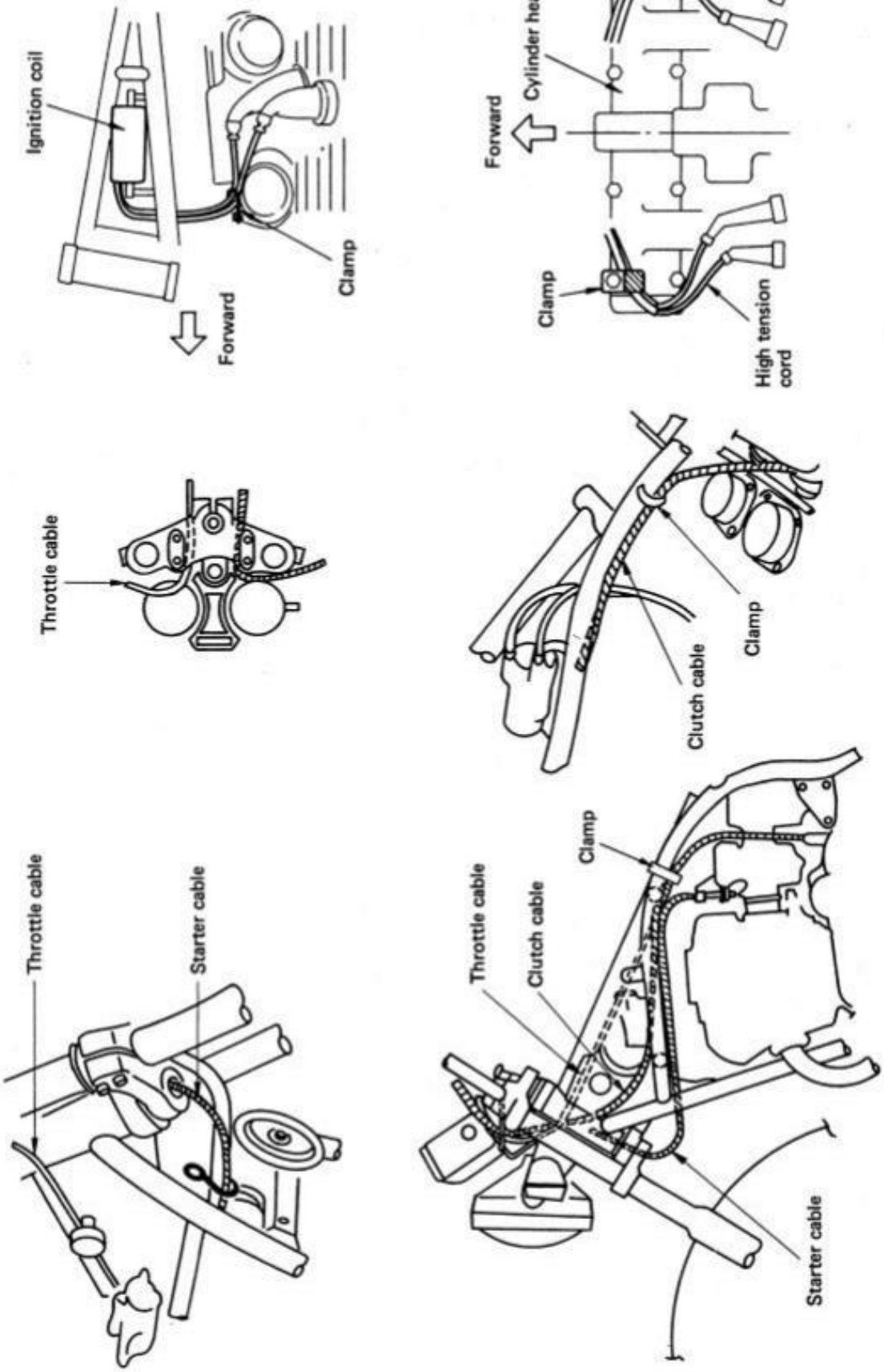

BRAKE HOSE ROUTING

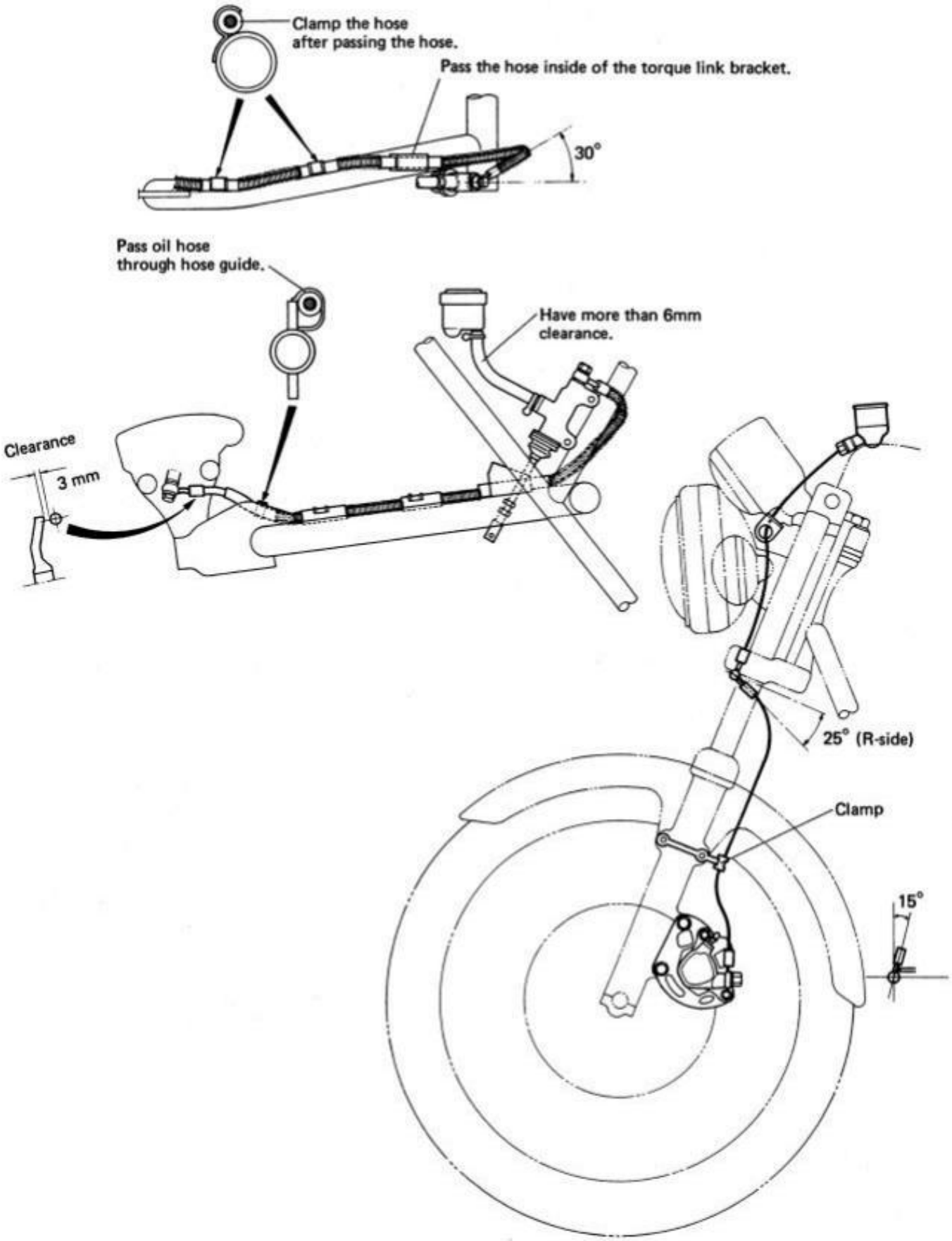

WIRE HARNESS ROUTING

GS550 AND GS550E

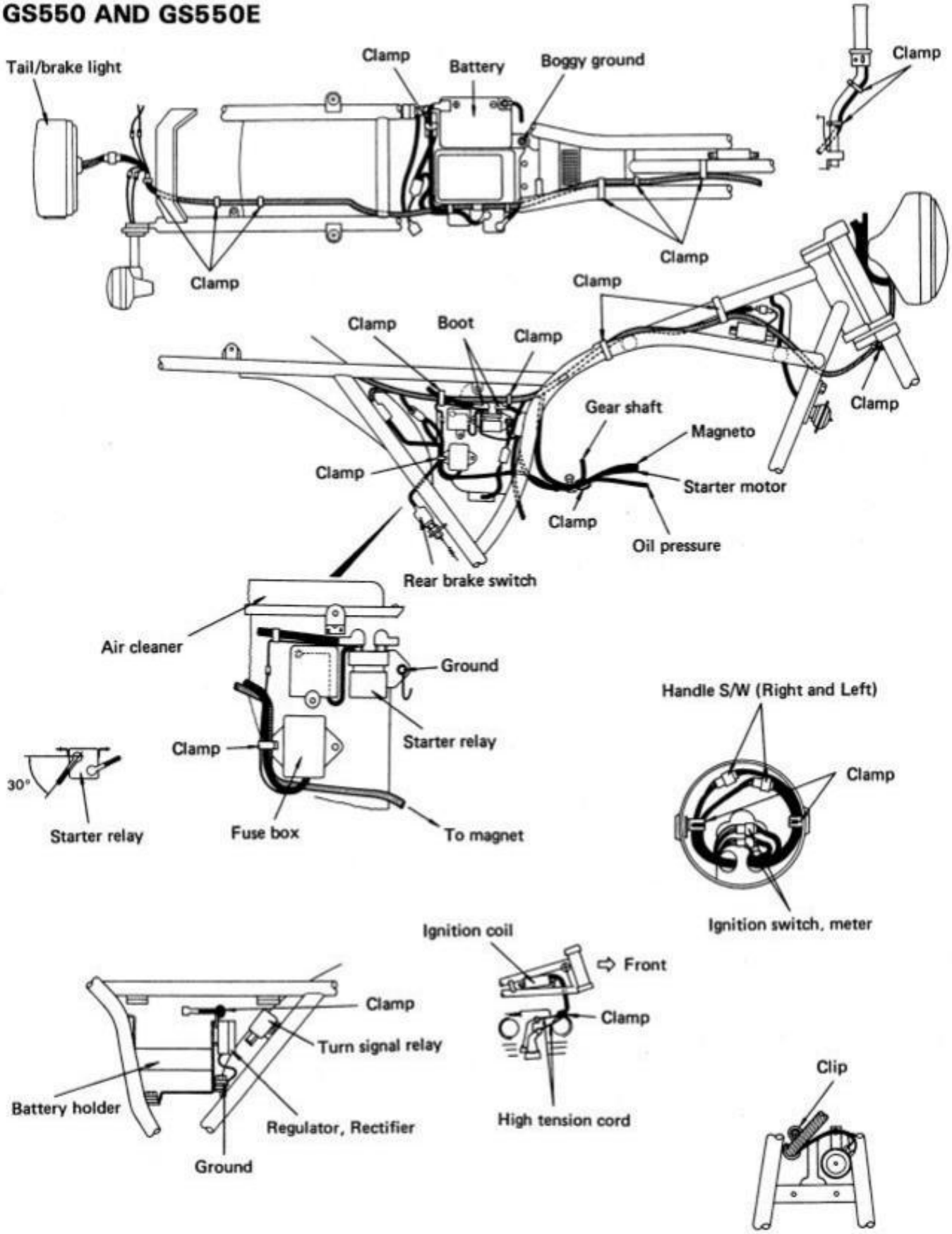

GS550T AND GS550L

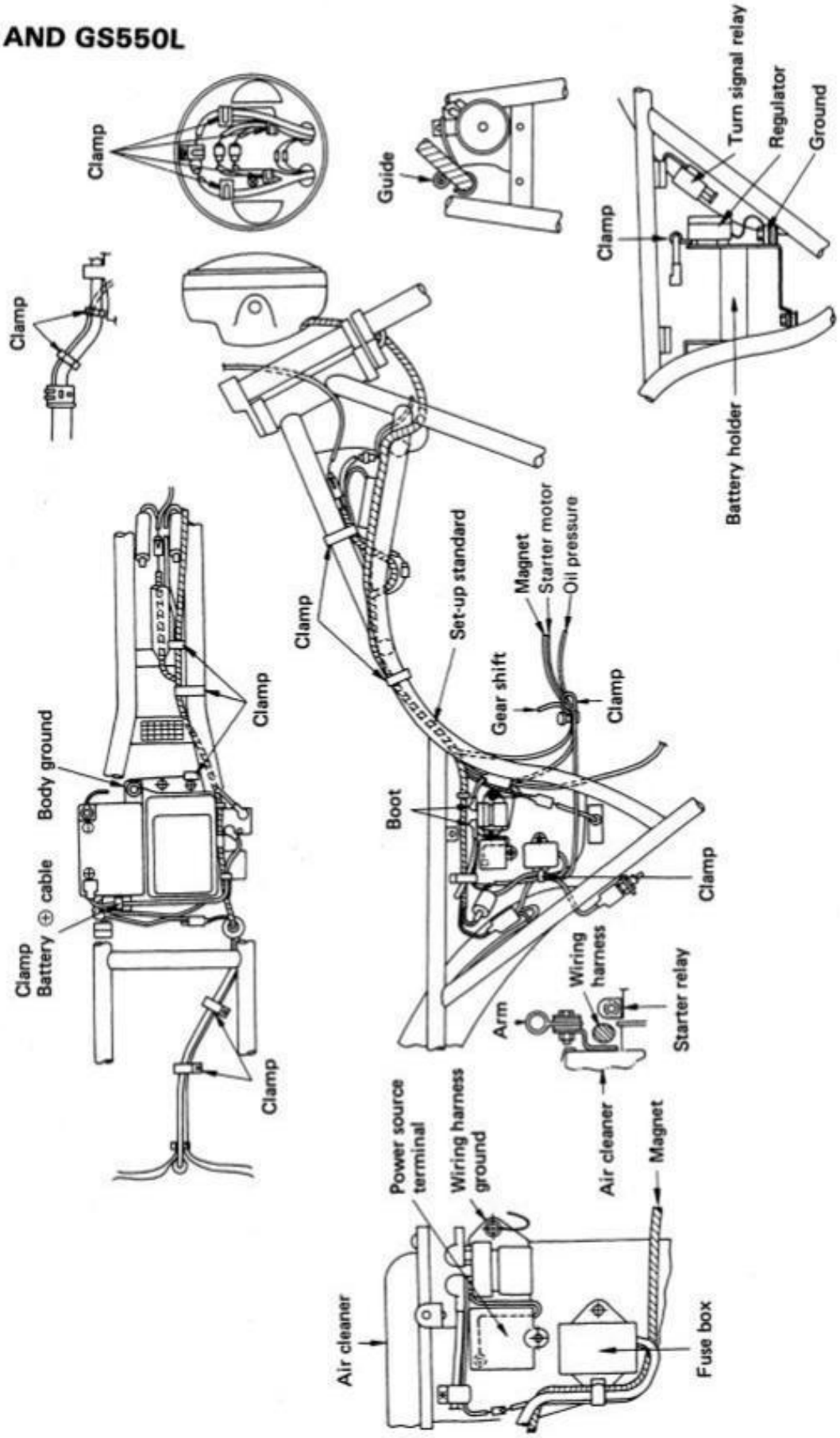

FOREWORD

The Suzuki GS550TX and GS550LX are new 1981 models and incorporate many refinements and technical changes from the previous model. This new supplementary section has been produced to aid Suzuki mechanics in properly maintaining and repairing these model motorcycles, which incorporate so many new and innovative changes. These technical improvements have further enhanced the comfort, handling and overall performance of these outstanding models.
This supplement has been written primarily for the experienced Suzuki mechanic but will also be very useful even for the apprentice mechanic and do-it-yourself mechanics. The entire manual should be thoroughly reviewed before any servicing is performed.

Please also refer to the sections of 1 through 16 of this Service Manual for all other areas of information not covered in this section.

NOTE:
All service data, service specifications and tightening torque tables differing with those that apply to the GS550 "T" model are clearly indicated with an asterisk (*).

CONTENTS

VIEW OF SUZUKI GS550TX/LX 557
SPECIFICATIONS 559
SERVICE DATA
GS550T 561
GS550L 572
PERIODIC MAINTENANCE 583
EMISSION CONTROL & REGULATIONS 584
MODIFICATIONS 588
WIRING DIAGRAM 590
CABLE ROUTING 592
BRAKE HOSE ROUTING 593
WIRE HARNESS ROUTING 594

VIEW OF SUZUKI GS550TX/LX

GS550T

GS550L

SPECIFICATIONS

GS550T

DIMENSIONS AND DRY MASS

Overall length	2 200 mm
Overall width	850 mm
Overall height	1 180 mm
Wheelbase	1 435 mm
Ground clearance	150 mm
Seat height	780 mm
Dry mass	200 kg

ENGINE

Type	Four-stroke, air-cooled, DOHC
Number of cylinders	4
Bore	56.0 mm
Stroke	55.8 mm
Piston displacement	549 cm^3
Compression ratio	8.6 : 1
Carburetor	MIKUNI BS32SS, four
Air cleaner	Polyurethane foam element
Starter system	Electric
Lubrication system	Wet sump

TRANSMISSION

Clutch	Wet multi-plate type
Transmission	6-speed constant mesh
Gearshift pattern	1-down, 5-up
Primary reduction	1.977 (87/44)
Final reduction	3.333 (50/15)
Gear ratios, Low	2.666 (32/12)
2nd	1.777 (32/18)
3rd	1.380 (29/21)
4th	1.173 (27/23)
5th	1.045 (23/22)
Top	0.956 (22/23)
Drive chain	DAIDO D.I.D. 50HDL or TAKASAGO RK50SHO, 110 links

CHASSIS

Front suspension	Telescopic, oil dampened
Rear suspension	Swinging arm, automatic dual damping, spring 5-way adjustable
Steering angle	40° (right & left)
Caster	61°30′
Trail	116 mm
Turning radius	2.5 m
Front brake	Disc brake
Rear brake	Disc brake
Front tire size	3.25H19 4PR
Rear tire size	4.25H17 4PR
Front fork stroke	150 mm
Rear wheel travel	100 mm

ELECTRICAL

Ignition type	Transistorized
Ignition timing	15° B.T.D.C. below 1 500 r/min and 40° B.T.D.C. above 2 350 r/min.
Spark plug	NGK B8ES or NIPPON DENSO W24ES-U
Battery	12V 43.2kC (12Ah)/10HR
Generator	Three-phase A.C. generator
Fuse	10/10/10/15A

CAPACITIES

Fuel tank including reserve	12L
reserve	4.0L
Engine oil	2.4L
Front fork oil	190 ml

GS550L

DIMENSIONS AND DRY MASS

• Overall length	2 215 mm
• Overall width	870 mm
• Overall height	1 180 mm
• Wheelbase	1 460 mm
• Ground clearance	140 mm
• Seat height	775 mm
Dry mass	205 kg

ENGINE

Type	Four-stroke, air-cooled, DOHC
Number of cylinders	4
Bore	56.0 mm
Stroke	55.8 mm
Piston displacement	549 cm^3
Compression ratio	8.6 : 1
Carburetor	MIKUNI BS32SS, four
Air cleaner	Polyurethane foam element
Starter system	Electric
Lubrication system	Wet sump

TRANSMISSION

Clutch	Wet multi-plate type
Transmission	6-speed constant mesh
Gearshift pattern	1-down, 5-up
Primary reduction	1.977 (87/44)
Final reduction	3.266 (49/15)
Gear ratios, Low	2.666 (32/12)
2nd	1.777 (32/18)
3rd	1.380 (29/21)
4th	1.173 (27/23)
5th	1.045 (23/22)
Top	0.956 (22/23)
Drive chain	DAIDO D.I.D. 50HDL or TAKASAGO RK50SHO, 108 links

CHASSIS

Front suspension	Telescopic, oil dampened
Rear suspension	Swinging arm, oil dampened, spring 5-way adjustable
Steering angle	40° (right & left)
Caster	60°00'
• Trail	112 mm
• Turning radius	2.5 m
Front brake	Disc brake
Rear brake	Disc brake
• Front tire size	90/90-19 52H
• Rear tire size	130/90-16 67H
• Front fork stroke	160 mm
• Rear wheel travel	95 mm

ELECTRICAL

Ignition type	Transistorized
Ignition timing	15° B.T.D.C. below 1 500 r/min and 40° B.T.D.C. above 2 350 r/min
Spark plug	NGK B8ES or NIPPON DENSO W24ES-U
Battery	12V 43.2kC (12Ah)/10HR
Generator	Three-phase A.C. generator
Fuse	10/10/10/15A

CAPACITIES

• Fuel tank including reserve	12L
• reserve	4.0L
Engine oil	2.4L
• Front fork oil	249 ml

Asterisk marked (*) specifications are different from those of the GS550LT.

SERVICE DATA

GS550T

VALVE + GUIDE

Unit: mm (in)

ITEM		STANDARD	LIMIT
Valve diam.	IN.	32.0 (1.26)	———
	EX.	27.0 (1.06)	———
Valve lift	IN.	7.2 (0.283)	———
	EX.	7.0 (0.276)	———
Tappet clearance (when cold)	IN. & EX.	0.03 – 0.08 (0.001 – 0.003)	———
Valve guide to valve stem clearance	IN.	0.020 – 0.050 (0.0008 – 0.0020)	0.35 (0.014)
	EX.	0.030 – 0.060 (0.0012 – 0.0024)	0.35 (0.014)
Valve guide I.D.	IN. & EX.	7.000 – 7.015 (0.2756 – 0.2762)	———
Valve stem O.D.	IN.	6.965 – 6.980 (0.2742 – 0.2748)	———
	EX.	6.955 – 6.970 (0.2738 – 0.2744)	———
Valve stem runout	IN. & EX.	———	0.05 (0.002)
Valve head thickness	IN. & EX.	———	0.5 (0.02)
Valve stem end length	IN. & EX.	———	4.0 (0.16)
Valve seat width	IN. & EX.	0.9 – 1.1 (0.035 – 0.043)	———
Valve head radial runout	IN. & EX.	———	0.03 (0.001)
Valve spring free length (IN. & EX.)	INNER	———	33.9 (1.33)
	OUTER	———	41.3 (1.63)
Valve spring tension (IN. & EX.)	INNER	8.9 – 12.5 kg (19.6 – 27.6 lbs) at length 31 mm (1.2 in)	———
	OUTER	22.1 – 27.1 kg (48.7 – 59.7 lbs) at length 35 mm (1.4 in)	———

CAMSHAFT + CYLINDER HEAD

Unit: mm (in)

ITEM	STANDARD		LIMIT
Cam height	IN.	35.485 – 35.515 (1.3970 – 1.3982)	35.190 (1.3854)
	EX.	35.285 – 35.315 (1.3892 – 1.3904)	34.990 (1.3776)
Camshaft journal oil clearance	IN. & EX.	0.020 – 0.054 (0.0008 – 0.0021)	0.150 (0.0059)
Camshaft journal holder I.D.	IN. & EX.	22.000 – 22.013 (0.8661 – 0.8667)	———
Camshaft journal O.D.	IN. & EX.	21.959 – 21.980 (0.8645 – 0.8654)	———
Camshaft runout	IN. & EX.	———	0.10 (0.004)
Cam chain 20 pitch length		———	157.8 (6.213)
Cam chain pin (at arrow "3")		20 th pin	———
Cylinder head distortion		———	0.2 (0.008)

CYLINDER + PISTON + PISTON RING

Unit: mm (in)

ITEM	STANDARD	LIMIT
Compression pressure	9.0 – 13.0 kg/cm² (128 – 185 psi)	7.0 kg/cm² (100 psi)
Compression pressure difference	———	2 kg/cm² (28 psi)
Piston to cylinder clearance	0.045 – 0.055 (0.0018 – 0.0022)	0.120 (0.0047)
Cylinder bore	56.000 – 56.015 (2.2047 – 2.2053)	56.085 (2.2081)
Piston diam.	55.950 – 55.965 (2.2028 – 2.2033) Measure at the 15 (0.59) from skirt end.	55.880 (2.2000)
Cylinder distortion	———	0.26 (0.008)

Unit: mm (in)

ITEM	STANDARD			LIMIT
Piston ring free end gap	1st	N	Approx. 6.5 (0.26)	5.2 (0.20)
		T	Approx. 6.5 (0.26)	5.2 (0.20)
	2nd	N	Approx. 6.5 (0.26)	5.2 (0.20)
		T	Approx. 6.5 (0.26)	5.2 (0.20)
Piston ring end gap	1st		0.1 – 0.3 (0.004 – 0.012)	0.70 (0.028)
	2nd		0.1 – 0.3 (0.004 – 0.012)	0.70 (0.028)
Piston ring to groove clearance	1st		———	0.180 (0.0071)
	2nd		———	0.150 (0.0059)
Piston ring groove width	1st		1.21 – 1.23 (0.0476 – 0.0484)	———
	2nd		1.21 – 1.23 (0.0476 – 0.0484)	———
	Oil		2.51 – 2.53 (0.0988 – 0.0996)	———
Piston ring thickness	1st		1.175 – 1.190 (0.0463 – 0.0469)	———
	2nd		1.170 – 1.190 (0.0461 – 0.0469)	———
Piston pin bore			16.002 – 16.008 (0.6300 – 0.6302)	16.030 (0.6311)
Piston pin O.D.			15.995 – 16.000 (0.6297 – 0.6300)	15.980 (0.6291)

CONROD + CRANKSHAFT

Unit: mm (in)

ITEM	STANDARD	LIMIT
Conrod small end I.D.	16.006 – 16.014 (0.6302 – 0.6305)	16.040 (0.6315)
Conrod deflection	———	3.0 (0.12)
Conrod big end side clearance	0.10 – 0.65 (0.004 – 0.026)	1.0 (0.039)
Crankshaft runout	———	0.10 (0.004)

OIL PUMP

ITEM	STANDARD	LIMIT
Oil pump reduction ratio	1.821 (87 / 44 x 35 / 38)	———
Oil pressure (at 60°C, 140°F)	Above 0.1 kg/cm² (1.42 psi) Below 0.3 kg/cm² (4.27 psi) at 3000 r/min.	———

CLUTCH

Unit: mm (in)

ITEM	STANDARD	LIMIT
Clutch cable play	2 – 3 (0.08 – 0.12)	———
Clutch release screw	¼ – ½ Turn back	———
Drive plate thickness	2.9 – 3.1 (0.114 – 0.122)	2.6 (0.10)
Drive plate claw width	11.8 – 12.0 (0.465 – 0.472)	11.0 (0.433)
Driven plate thickness	1.6 ± 0.06 (0.063 ± 0.002)	———
Driven plate distortion	———	0.1 (0.004)
Clutch spring free length	———	36.5 (1.44)

TRANSMISSION + DRIVE CHAIN

Unit: mm (in)

ITEM	STANDARD		LIMIT
Primary reduction ratio	1.977 (87 / 44)		———
Final reduction ratio	3.333 (50 / 15)		———
Gear ratios	Low	2.666 (32 / 12)	———
	2nd	1.777 (32 / 18)	———
	3rd	1.380 (29 / 21)	———
	4th	1.173 (27 / 23)	———
	5th	1.045 (23 / 22)	———
	Top	0.956 (22 / 23)	———
Shift fork to groove clearance	0.1 – 0.3 (0.004 – 0.012)		0.5 (0.020)
Shift fork groove width	5.5 – 5.6 (0.217 – 0.220)		———
Shift fork thickness	5.3 – 5.4 (0.195 – 0.199)		———
Drive chain	Type	D.I.D.: 50HDL TAKASAGO: RK50SHO	———
	Links	110	———
	20 pitch length	———	320.0 (12.60)
Drive chain slack	20 – 30 (0.8 – 1.2)		———

CARBURETOR

Unit: mm (in)

ITEM	SPECIFICATION
Carburetor type	MIKUNI BS32SS, Four
Bore size	32
I. D. No.	47070
Idle r/min.	1100 ± 100 r/min.
Fuel level	5.0 ± 1.0 (0.20 ± 0.04)
Float height	22.4 ± 1.0 (0.88 ± 0.04)
Main jet (M. J.)	# 92.5
Main air jet (M. A. J.)	1.6
Jet needle (J. N.)	4BEL2
Needle jet (N. J.)	X-6
Throttle valve	# 140
Pilot jet (P. J.)	# 40
By pass (B. P.)	0.9, 0.7, 0.7
Pilot outlet (P. O.)	0.7
Valve seat (V. S.)	2.0
Starter jet (G. S.)	#35
Pilot screw (P. S.)	PRE-SET
Pilot air jet (P. A. J.)	# 150
Throttle cable play	0.5 – 1.0 (0.02 – 0.04)
Choke cable play	0.5 – 1.0 (0.02 – 0.04)

ELECTRICAL

Unit: mm (in)

ITEM	SPECIFICATION		
Ignition timing	15° B.T.D.C. Below 1500 ± 100 r/min and 40° B.T.D.C. Above 2350 ± 100 r/min.		
Firing order	1, 2, 4, 3		
Spark plug	Type	NGK B8ES or N.D.W24ES–U	
	Gap	0.6 – 0.8 (0.024 – 0.031)	
Spark performance	Over 8 (0.3) at 1 atm		
Signal coil resistance	Approx. 60 – 80 Ω		
Ignition coil resistance	Primary	O/W – W or B/Y Approx. 3 – 5 Ω	
	Secondary	Plug cap – Plug cap Approx. 30 – 35 kΩ	
Generator no-load voltage	More than 80 V (AC) at 5000 r/min.		
Regulated voltage	14.0 – 15.5 V at 5000 r/min.		
Starter motor	Brush length	N. D.	Limit 6 (0.24)
	Commutator under cut		Limit 0.2 (0.008)
Starter relay resistance	Approx. 3 – 4 Ω		
Battery	Type designation	YB10L –A2	
	Capacity	12V 43.2kC (12Ah)/10HR	
	Standard electrolyte S. G.	1.28 at 20°C (68°F)	
Fuse size	Main	15 A	
	Headlight	10 A	
	Turn signal	10 A	
	Ignition	10 A	
	Power source	10 A	

BRAKE + WHEEL

Unit: mm (in)

ITEM		STANDARD	LIMIT
Rear brake pedal height		20 (0.8)	
Brake disc thickness	Front	6.0 ± 0.2 (0.24 ± 0.008)	5.5 (0.22)
	Rear	6.7 ± 0.2 (0.26 ± 0.008)	6.0 (0.24)
Brake disc runout		———	0.30 (0.012)
Master cylinder bore	Front	14.000 – 14.043 (0.5512 – 0.5529)	———
	Rear	14.000 – 14.043 (0.5512 – 0.5529)	———
Master cylinder piston diam.	Front	13.941 – 13.968 (0.5489 – 0.5499)	———
	Rear	13.957 – 13.984 (0.5495 – 0.5506)	———
Brake caliper cylinder bore	Front	42.860 – 42.899 (1.6874 – 1.6889)	———
	Rear	38.180 – 38.256 (1.5031 – 1.5061)	———
Brake caliper piston diam.	Front	42.785 – 42.810 (1.6844 – 1.6854)	———
	Rear	38.098 – 38.148 (1.4999 – 1.5019)	———
Wheel rim runout	Axial	———	2.0 (0.08)
	Radial	———	2.0 (0.08)
Wheel axle runout	Front	———	0.25 (0.010)
	Rear	———	0.25 (0.010)

Unit: mm (in)

ITEM		STANDARD	LIMIT
Tire size	Front	3.25H19 4PR	——
	Rear	4.25H17 4PR	——
Tire tread depth	Front	——	1.6 (0.06)
	Rear	——	2.0 (0.08)

SUSPENSION

Unit: mm (in)

ITEM		STANDARD	LIMIT
Front fork stroke		150 (5.9)	——
Front fork spring free length	Short	——	92.9 (3.66)
	Long	——	396.4 (15.61)
Front fork oil level		201 (7.91)	——
Rear wheel travel		100 (3.94)	——
Swing arm pivot shaft runout		——	0.3 (0.012)

FUEL + OIL

ITEM	SPECIFICATION
Fuel type	Use only unleaded or low-lead type gasoline of at least 85 - 95 pump octane ($\frac{R+M}{2}$ method) or 89 octane or higher rated by the Research Method.
Fuel tank including reserve	12 L (3.2 / 2.6 US/Imp gal)
reserve	4.0 L (4.2 / 3.5 US/Imp qt)
Engine oil type	SAE 10W/40
Engine oil capacity	Change 2400 ml (2.5 / 2.1 US/Imp qt)
	Filter change 2600 ml (2.7 / 2.3 US/Imp qt)
	Overhaul 2700 ml (2.8 / 2.4 US/Imp qt)
Front fork oil type	Fork oil # 15
Front fork oil capacity (each leg)	190 ml (6.42 / 6.69 US/Imp oz)
Brake fluid type	DOT3 or DOT4

TIRE PRESSURE

COLD INFLATION TIRE PRESSURE	NORMAL RIDING						CONTINUOUS HIGH SPEED RIDING					
	SOLO RIDING			DUAL RIDING			SOLO RIDING			DUAL RIDING		
	kPa	kg/cm²	psi	kPa	kg/cm²	psi	kPa	kg/cm²	psi	kPa	kg/cm²	psi
FRONT	175	1.75	25	175	1.75	25	200	2.00	28	200	2.00	28
REAR	200	2.00	28	250	2.50	36	225	2.25	32	280	2.80	40

WATTAGE

(W)

ITEM		SPECIFICATION
Headlight	HI	60
	LO	55
Tail/Brake light		8/23
Turn signal light		23
Speedometer light		3.4
Tachometer light		3.4
Turn signal indicator light		3.4
High beam indicator light		3.4
Neutral indicator light		3.4
Oil pressure indicator light		3.4
Gear position indicator light		1.4

GS550L

VALVE + GUIDE

Unit: mm (in)

ITEM	STANDARD		LIMIT
Valve diam.	IN.	32.0 (1.26)	———
	EX.	27.0 (1.06)	———
Valve lift	IN.	7.2 (0.283)	———
	EX.	7.0 (0.276)	———
Tappet clearance (when cold)	IN. & EX.	0.03 – 0.08 (0.001 – 0.003)	———
Valve guide to valve stem clearance	IN.	0.020 – 0.050 (0.0008 – 0.0020)	0.35 (0.014)
	EX.	0.030 – 0.060 (0.0012 – 0.0024)	0.35 (0.014)
Valve guide I.D.	IN. & EX.	7.000 – 7.015 (0.2756 – 0.2762)	———
Valve stem O.D.	IN.	6.965 – 6.980 (0.2742 – 0.2748)	———
	EX.	6.955 – 6.970 (0.2738 – 0.2744)	———
Valve stem runout	IN. & EX.	———	0.05 (0.002)
Valve head thickness	IN. & EX.	———	0.5 (0.02)
Valve stem end length	IN. & EX.	———	4.0 (0.16)
Valve seat width	IN. & EX.	0.9 – 1.1 (0.035 – 0.043)	———
Valve head radial runout	IN. & EX.	———	0.03 (0.001)
Valve spring free length (IN. & EX.)	INNER	———	33.9 (1.33)
	OUTER	———	41.3 (1.63)
Valve spring tension (IN. & EX.)	INNER	8.9 – 12.5 kg (19.6 – 27.6 lbs) at length 31 mm (1.2 in)	———
	OUTER	22.1 – 27.1 kg (48.7 – 59.7 lbs) at length 35 mm (1.4 in)	———

CAMSHAFT + CYLINDER HEAD

Unit: mm (in)

ITEM	STANDARD		LIMIT
Cam height	IN.	35.485 – 35.515 (1.3970 – 1.3982)	35.190 (1.3854)
	EX.	35.285 – 35.315 (1.3892 – 1.3904)	34.990 (1.3776)
Camshaft journal oil clearance	IN. & EX.	0.020 – 0.054 (0.0008 – 0.0021)	0.150 (0.0059)
Camshaft journal holder I.D.	IN. & EX.	22.000 – 22.013 (0.8661 – 0.8667)	———
Camshaft journal O.D.	IN. & EX.	21.959 – 21.980 (0.8645 – 0.8654)	———
Camshaft runout	IN. & EX.	———	0.10 (0.004)
Cam chain 20 pitch length		———	157.8 (6.213)
Cam chain pin (at arrow "3")		20 th pin	———
Cylinder head distortion		———	0.2 (0.008)

CYLINDER + PISTON + PISTON RING

Unit: mm (in)

ITEM	STANDARD	LIMIT
Compression pressure	9.0 – 13.0 kg/cm² (128 – 185 psi)	7.0 kg/cm² (100 psi)
Compression pressure difference	———	2 kg/cm² (28 psi)
Piston to cylinder clearance	0.045 – 0.055 (0.0018 – 0.0022)	0.120 (0.0047)
Cylinder bore	56.000 – 56.015 (2.2047 – 2.2053)	56.085 (2.2081)
Piston diam.	55.950 – 55.965 (2.2028 – 2.2033) Measure at the 15 (0.59) from skirt end.	55.880 (2.2000)
Cylinder distortion	———	0.26 (0.008)

Unit: mm (in)

ITEM	STANDARD			LIMIT
Piston ring free end gap	1st	N	Approx. 6.5 (0.26)	5.2 (0.20)
		T	Approx. 6.5 (0.26)	5.2 (0.20)
	2nd	N	Approx. 6.5 (0.26)	5.2 (0.20)
		T	Approx. 6.5 (0.26)	5.2 (0.20)
Piston ring end gap	1st		0.1 – 0.3 (0.004 – 0.012)	0.70 (0.028)
	2nd		0.1 – 0.3 (0.004 – 0.012)	0.70 (0.028)
Piston ring to groove clearance	1st		———	0.180 (0.0071)
	2nd		———	0.150 (0.0059)
Piston ring groove width	1st		1.21 – 1.23 (0.0476 – 0.0484)	———
	2nd		1.21 – 1.23 (0.0476 – 0.0484)	———
	Oil		2.51 – 2.53 (0.0988 – 0.0996)	———
Piston ring thickness	1st		1.175 – 1.190 (0.0463 – 0.0469)	———
	2nd		1.170 – 1.190 (0.0461 – 0.0469)	———
Piston pin bore			16.002 – 16.008 (0.6300 – 0.6302)	16.030 (0.6311)
Piston pin O.D.			15.995 – 16.000 (0.6297 – 0.6300)	15.980 (0.6291)

CONROD + CRANKSHAFT

Unit: mm (in)

ITEM	STANDARD	LIMIT
Conrod small end I.D.	16.006 – 16.014 (0.6302 – 0.6305)	16.040 (0.6315)
Conrod deflection	———	3.0 (0.12)
Conrod big end side clearance	0.10 – 0.65 (0.004 – 0.026)	1.0 (0.039)
Crankshaft runout	———	0.10 (0.004)

OIL PUMP

ITEM	STANDARD	LIMIT
Oil pump reduction ratio	1.821 (87 / 44 x 35 / 38)	———
Oil pressure (at 60°C, 140°F)	Above 0.1 kg/cm² (1.42 psi) Below 0.3 kg/cm² (4.27 psi) at 3000 r/min.	———

CLUTCH

Unit: mm (in)

ITEM	STANDARD	LIMIT
Clutch cable play	2 – 3 (0.08 – 0.12)	———
Clutch release screw	¼ – ½ Turn back	———
Drive plate thickness	2.9 – 3.1 (0.114 – 0.122)	2.6 (0.10)
Drive plate claw width	11.8 – 12.0 (0.465 – 0.472)	11.0 (0.433)
Driven plate thickness	1.6 ± 0.06 (0.063 ± 0.002)	———
Driven plate distortion	———	0.1 (0.004)
Clutch spring free length	———	36.5 (1.44)

TRANSMISSION + DRIVE CHAIN

Unit: mm (in)

ITEM	STANDARD		LIMIT
Primary reduction ratio	1.977 (87 / 44)		———
Final reduction ratio	3.266 (49 / 15)		———
Gear ratios	Low	2.666 (32 / 12)	———
	2nd	1.777 (32 / 18)	———
	3rd	1.380 (29 / 21)	———
	4th	1.173 (27 / 23)	———
	5th	1.045 (23 / 22)	———
	Top	0.956 (22 / 23)	———
Shift fork to groove clearance	0.1 – 0.3 (0.004 – 0.012)		0.5 (0.020)
Shift fork groove width	5.5 – 5.6 (0.217 – 0.220)		———
Shift fork thickness	5.3 – 5.4 (0.195 – 0.199)		———
Drive chain	Type	D.I.D.: 50HDL TAKASAGO: RK50SHO	———
	Links	108	———
	20 pitch length	———	320.0 (12.60)
Drive chain slack	20 – 30 (0.8 – 1.2)		———

CARBURETOR

Unit: mm (in)

ITEM	SPECIFICATION
Carburetor type	MIKUNI BS32SS, Four
Bore size	32
I. D. No.	47070
Idle r/min.	1100 ± 100 r/min.
Fuel level	5.0 ± 1.0 (0.20 ± 0.04)
Float height	22.4 ± 1.0 (0.88 ± 0.04)
Main jet (M. J.)	#92.5
Main air jet (M. A. J.)	1.6
Jet needle (J. N.)	4BEL2
Needle jet (N. J.)	X-6
Throttle valve	#140
Pilot jet (P. J.)	#40
By pass (B. P.)	0.9, 0.7, 0.7
Pilot outlet (P. O.)	0.7
Valve seat (V. S.)	2.0
Starter jet (G. S.)	#35
Pilot screw (P. S.)	PRE-SET
Pilot air jet (P. A. J.)	#150
Throttle cable play	0.5 – 1.0 (0.02 – 0.04)
Choke cable play	0.5 – 1.0 (0.02 – 0.04)

ELECTRICAL

Unit: mm (in)

ITEM	SPECIFICATION		
Ignition timing	15° B.T.D.C. Below 1500 ± 100 r/min and 40° B.T.D.C. Above 2350 ± 100 r/min.		
Firing order	1, 2, 4, 3		
Spark plug	Type	NGK B8ES or N.D. W24ES–U	
	Gap	0.6 – 0.8 (0.024 – 0.031)	
Spark performance	Over 8 (0.3) at 1 atm		
Signal coil resistance	Approx. 60 – 80 Ω		
Ignition coil resistance	Primary	O/W – W or B/Y Approx. 3 – 5 Ω	
	Secondary	Plug cap – Plug cap Approx. 30 – 35 kΩ	
Generator no-load voltage	More than 80 V (AC) at 5000 r/min.		
Regulated voltage	14.0 – 15.5 V at 5000 r/min.		
Starter motor	Brush length	N. D.	Limit 6 (0.24)
	Commutator under cut		Limit 0.2 (0.008)
Starter relay resistance	Approx. 3 – 4 Ω		
Battery	Type designation	YB10L –A2	
	Capacity	12V 43.2kC (12Ah)/10HR	
	Standard electrolyte S. G.	1.28 at 20°C (68°F)	
Fuse size	Main	15 A	
	Headlight	10 A	
	Turn signal	10 A	
	Ignition	10 A	
	Power source	10 A	

BRAKE + WHEEL

Unit: mm (in)

ITEM		STANDARD	LIMIT
Rear brake pedal height		20 (0.8)	
Brake disc thickness	Front	6.0 ± 0.2 (0.24 ± 0.008)	5.5 (0.22)
	Rear	6.7 ± 0.2 (0.26 ± 0.008)	6.0 (0.24)
Brake disc runout		———	0.30 (0.012)
Master cylinder bore	Front	14.000 – 14.043 (0.5512 – 0.5529)	———
	Rear	14.000 – 14.043 (0.5512 – 0.5529)	———
Master cylinder piston diam.	Front	13.941 – 13.968 (0.5489 – 0.5499)	———
	Rear	13.957 – 13.984 (0.5495 – 0.5506)	———
Brake caliper cylinder bore	Front	42.860 – 42.899 (1.6874 – 1.6889)	———
	Rear	38.180 – 38.256 (1.5031 – 1.5061)	———
Brake caliper piston diam.	Front	42.785 – 42.810 (1.6844 – 1.6854)	———
	Rear	38.098 – 38.148 (1.4999 – 1.5015)	———
Wheel rim runout	Axial	———	2.0 (0.08)
	Radial	———	2.0 (0.08)
Wheel axle runout	Front	———	0.25 (0.010)
	Rear	———	0.25 (0.010)

Unit: mm (in)

ITEM	STANDARD		LIMIT
Tire size	Front	90/90 – 19 52H	———
	Rear	130/90 – 16 67H	———
Tire tread depth	Front	———	1.6 (0.06)
	Rear	———	2.0 (0.08)

SUSPENSION

Unit: mm (in)

ITEM	STANDARD		LIMIT
Front fork stroke	160 (6.3)		———
Front fork spring free length	Short	———	159.1 (6.26)
	Long	———	448.7 (17.67)
Front fork oil level	208 (8.19)		———
Rear wheel travel	95 (3.74)		———
Swing arm pivot shaft runout	———		0.3 (0.012)

FUEL + OIL

ITEM		SPECIFICATION
Fuel type		Use only unleaded or low-lead type gasoline of at least 85 - 95 pump octane ($\frac{R+M}{2}$ method) or 89 octane or higher rated by the Research Method.
Fuel tank including reserve		12 L (3.2 / 2.6 US/Imp gal)
	reserve	4.0 L (4.2 / 3.5 US/Imp qt)
Engine oil type		SAE 10W/40
Engine oil capacity	Change	2400 ml (2.5 / 2.1 US/Imp qt)
	Filter change	2600 ml (2.7 / 2.3 US/Imp qt)
	Overhaul	2700 ml (2.8 / 2.4 US/Imp qt)
Front fork oil type		Fork oil # 15
Front fork oil capacity (each leg)		249 ml (8.42 / 8.77 US/Imp oz)
Brake fluid type		DOT3 or DOT4

TIRE PRESSURE

COLD INFLATION TIRE PRESSURE	NORMAL RIDING						CONTINUOUS HIGH SPEED RIDING					
	SOLO RIDING			DUAL RIDING			SOLO RIDING			DUAL RIDING		
	kPa	kg/cm²	psi	kPa	kg/cm²	psi	kPa	kg/cm²	psi	kPa	kg/cm²	psi
FRONT	200	2.00	28	225	2.25	32	200	2.00	28	250	2.50	36
REAR	200	2.00	28	225	2.25	32	225	2.25	32	280	2.80	40

WATTAGE

(W)

ITEM		SPECIFICATION
Headlight	HI	60
	LO	55
Tail/Brake light		8/23
Turn signal light		23
Speedometer light		3.4
Tachometer light		3.4
Turn signal indicator light		3.4
High beam indicator light		3.4
Neutral indicator light		3.4
Oil pressure indicator light		3.4
Fuel meter light		3.4
Gear position indicator light		1.4

PERIODIC MAINTENANCE

IMPORTANT: The periodic maintenance intervals and service requirements have been established in accordance with EPA regulations. Following these instructions will ensure that the motorcycle will not exceed emission standards and it will also enhance the reliability and performance of the motorcycle.

NOTE:
Vehicles operated under severe conditions may require more frequent servicing.

The chart below lists the recommended intervals for all the required periodic service work necessary to keep the motorcycle operating at peak performance and to maintain proper emission levels. Mileages are expressed in terms of kilometers, miles and time for your convenience.

PERIODIC MAINTENANCE SCHEDULE

INTERVAL: THIS INTERVAL SHOULD BE JUDGED BY ODOMETER READING OR MONTHS WHICHEVER COMES FIRST	Mile	600	4 000	7 500	11 000	15 000
	Km	1 000	6 000	12 000	18 000	24,000
	Month	2	12	24	36	48
Battery (specific gravity of electrolyte)		–	I	I	I	I
Cylinder head nuts and exhaust pipe bolts		T	T	T	T	T
Air cleaner element		–	C	C	C	C
Tappet clearance		I	I	I	I	I
Spark plugs		–	C	R	C	R
Fuel line		Replace every two years				
Engine oil and oil filter		R	R	R	R	R
Carburetor idle r/min		I	I	I	I	I
Clutch		I	I	I	I	I
Drive chain		I	I	I	I	I
		Clean and lubricate every 600 miles (1 000 km)				
Brake hose		Replace every two years				
Brake		I	I	I	I	I
Tires		I	I	I	I	I
Steering stem		I	I	I	I	I
Chassis bolts and nuts		T	T	T	T	T

NOTE: T = Tighten, I = Inspect, R = Replace, C = Clean

EMISSION CONTROL & REGULATIONS

On February 4, 1977, Federal Emission Regulations for motorcycles that may be licensable took effect. The regulations provided for a gradual, multi-step application of stricter emission limits beginning with all effected motorcycles manufactured after January 1, 1978, culminating with the present 1980 emission level restrictions. For the 1980 and succeeding years one set of emission limits is in effect. They are as follows:

1980 EMISSION LIMITS

CATEGORIES	HYDROCARBONS (HC)	CARBON MONOXIDE
All motorcycles 50 cc – Larger	5.0 Grams/Kilometer (8.0 Grams/Mile)	12 Grams/Kilometer (19.3 Grams/Mile)

Emission-controlled motorcycles which are subject to the emission regulations are those motorcycles which are equipped with a headlight, taillight, stop light and which have an engine displacement larger than 50 cc.

Suzuki Motor Company performed all the necessary testing and certification of emission-controlled models in strict compliance with the E.P.A. testing regulations. Suzuki motorcycle dealers are not required to either test or certify emission levels on any motorcycles as Suzuki Motor Company is legally responsible for the entire certification procedure.

E.P.A. regulations also provide fines for individuals who alter, render inoperative or improperly service emission-controlled motorcycles ranging up to $10,000.00 per motorcycle. It is essential that the individual servicing this emission-controlled motorcycle review thoroughly all the service procedures presented in this manual. Under no circumstances should the recommended service procedures be deviated from nor adjustments made which are not in accordance with the factory specifications or service procedures.

EMISSION CONTROL CARBURETOR COMPONENTS

GS550 motorcycles are equipped with precision, manufactured carburetors for emission level control. These carburetors require special mixture control components and other precision adjustments to function properly.

There are several carburetor mixture control components in each carburetor assembly. Three (3) of these components are machined to much closer tolerances than standard machined carburetor jets. These three (3) particular jets – MAIN JET, NEEDLE JET, PILOT JET – must not be replaced by standard jets. To aid in identifying these three (3) jets a different design of letter and number are used. If replacement of these close tolerance jets becomes necessary, be sure to replace them with the same type close tolerance jets marked as in the examples shown below.

The jet needle is also of special manufacture. Only one clip position is provided on the jet needle. If replacement becomes necessary the jet needle may only be replaced with an equivalent performing replacement component. Suzuki recommends that Genuine Suzuki Parts be utilized whenever possible for the best possible performance and durability.

Conventional figures Used On Standard Tolerance Jet Components	1 2 3 4 5 6 7 8 9 0
Emission Type Figures Used On Close Tolerance Jet Components	1 2 3 4 5 6 7 8 9 0

The carburetor specification for the emission-controlled GS550T and GS550L are as follows.

Carburetor I.D. No.	Main Jet	Needle Jet	Jet Needle	Pilot Jet	Pilot Screw
47070	#92.5	X-6	4BEL2	#40	PRE-SET DO NOT ADJUST

The pilot screw is pre-set by the factory utilizing specialized testing and adjusting procedures. The pilot screw is not adjustable as the idle circuit is "sealed" after factory adjustment. Adjusting, interferring with, improper replacement, or resetting of any of the carburetor components may adversely affect carburetor performance and cause the motorcycle to exceed the exhaust emission level limits. If persons, who are unaware of these special carburetor servicing requirements tamper with the carburetors the Suzuki dealer should restore the carburetors to their original condition or if unable to effect repairs, contact the distributors representative for further technical information and assistance.

GENERAL EMISSION INFORMATION

There are three different types of regulated exhaust emissions. They are:

Hydrocarbons (HC)
Carbon Monoxide (CO)
Oxides of Nitrogen (NOx)

Automobiles must meet specific emission standards for all three of these pollutants. Motorcycles must only meet the requirements for the following:

Hydrocarbons (HC)
Carbon Monoxide (CO)

HC exhaust emissions are basically unburned fuel vapors which have passed through the engine and escaped the combustion process.

CO exhaust emissions are formed during an incomplete combustion cycle as a result of a rich air/fuel mixture. The only way that CO can be produced is by the combustion cycle.

Total NOx emissions from all motorcycles is considered negligible. The EPA states that total NOx emission from motorcycles by 1990 will only amount to approximately 0.5%. NOx is formed during the combustion process at high combustion chamber temperatures.

CARBON MONOXIDE

Carbon monoxide is a product of an incomplete combustion cycle. CO is measured in grams per mile or kilometer and also in percentage (%).

The most common cause of CO is rich carburetion. As the mixture is richened excessively, the CO amount increases proportionately. Engine oil is also a hydrocarbon, so engine problems which lead to oil burning increase carbon monoxide.

CARBURETION MALFUNCTION

1. Air Cleaner – Dirty or over oiled.
2. Idle Mixture – Adjusted incorrectly.
3. Idle Speed – Too high or low.
4. Fuel Level – Sticking float, leaking needle, incorrect setting.
5. Choke – Leaking or linkage sticking.
6. Synchronization – Improper balance on multi cylinders.

ENGINE MALFUNCTIONS

1. Valve Seals – Leaking or torn.
2. Valve Guide – Worn and leaking excess oil.
3. Gaskets – Leaking oil into combustion chamber.

HYDROCARBONS

Hydrocarbons are umburned gasoline vapors and can be measured in two different ways. The first is to measure the weight of the pollutants over a specific distance such as grams per mile or grams per kilometer. The second method is to measure the concentration of HC in the exhaust gas in parts per million (PPM).

The most common cause of high HC emissions are ignition system problems. If the ignition system fails to ignite the fuel mixture properly, then raw gasoline vapors will pass through the engine into the exhaust system. Listed are the most common ignition problems which occur and which can affect HC emission output.

IGNITION SYSTEM MALFUNCTIONS

1. Spark Plugs – Fouled, dirty, improper type or improperly gapped.
2. Ignition timing – Advanced or Retarded.
3. Timing Advance – Too fast or too slow an advance rate.
4. Battery – Low charge or faulty.

Carburetion can also lead to high HC emissions if the mixture is either excessively rich or excessively lean.

MIXTURE-RELATED MALFUNCTIONS

1. Air Cleaner – Dirty, over oiled or torn.
2. Jets – Clogged, restricted or incorrect size.
3. Float Level – Level too low (lean) or too high (rich).
4. Choke – Leaking choke plunger or sticking linkage.
5. Air Leaks – Intake manifolds, engine gaskets and other sealing surfaces.
6. Synchronization – Unbalanced on multi-cylinder machines.
7. Exhaust System – Restricted flow or improper exhaust system.

Engine wear or damage can also cause high HC emissions.

1. Rings – Low compression, leakage into crankcase.
2. Valves – Improper adjustment, bent stem or burnt.
3. Gaskets – Leaking, loss of compression.
4. Crank Seals – Leaking.
5. Oil Consumption – Worn valve guides, worn rings, clogged crankcase breather.
6. Oil – Improper engine oil.

MODIFICATIONS

CAMSHAFT, SPROCKET AND BOLT

As a illustrated, the sprocket tightening bolt and method has been changed from Ⓐ to Ⓑ, to Ⓒ. Therefore, tightening torque should be observed.

Type Ⓐ

Part Name	Tightening torque
6 mm Allen bolt + Thread lock super "1303B"	8 – 12 N·m 0.8 – 1.2 kg·m 6.0 – 8.5 lb·ft

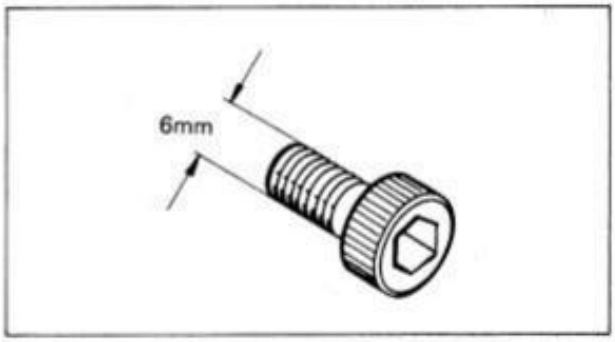

Type Ⓑ

Part Name	Tightening torque
6 mm bolt + Lock washer + Thread lock super "1303B"	15 – 20 N·m 1.5 – 2.0 kg·m 11.0 – 14.5 lb·ft

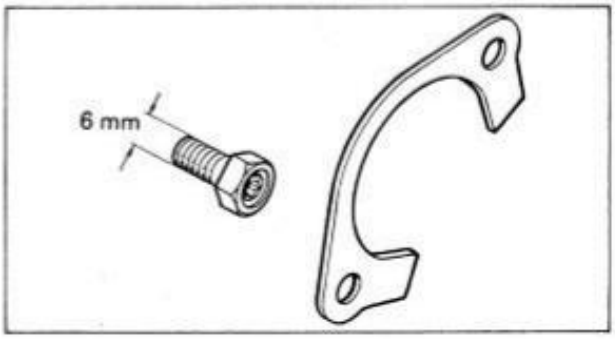

Type Ⓒ

Part Name	Tightening torque
7 mm flange bolt + Thread lock super "1303B"	24 – 26 N·m 2.4 – 2.6 kg·m 17.5 – 19.0 lb·ft

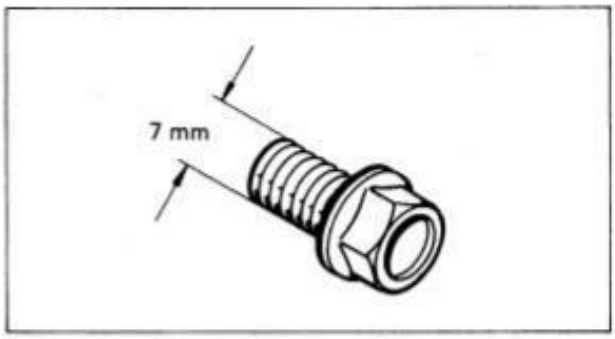

Part Name	Type Ⓐ Part Number	Type Ⓑ Part Number	Type Ⓒ Part Number
Bolt	09106-06024	09111-06033	09103-07001
Lock washer	–	12747-44000	–
IN, Cam sprocket	12741-47001	←	12741-47002
IN, Camshaft	12711-47000	←	12711-47001
EX, Cam sprocket	12751-47010	←	12751-47011
EX, Camshaft	12721-47010	←	12721-47011

NOTE:

Both Ⓐ type and Ⓑ type have an interchangeability by exchanging bolt for lock washer + bolt. However Ⓒ type has screw thread diameter of 7 mm, and bore diameters of the sprocket and the camshaft are also 7 mm, so there is no interchangeability with neither Ⓐ type nor Ⓑ type.

STEERING STEM

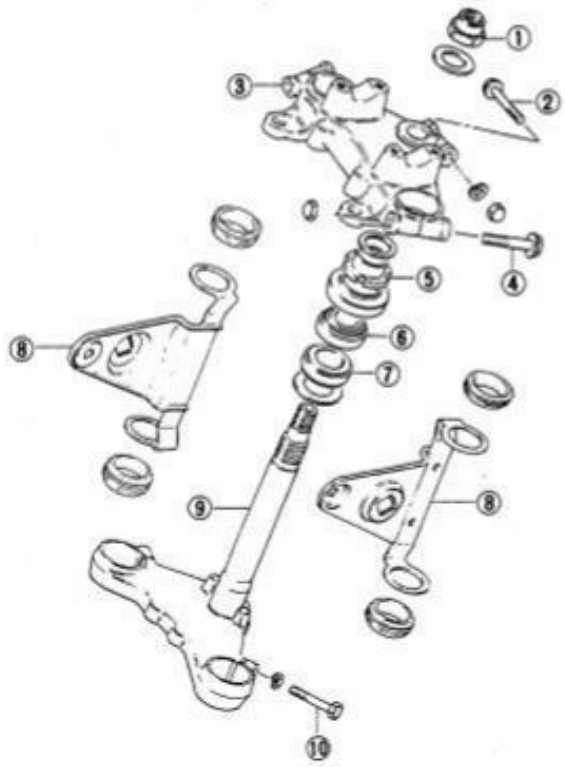

① Steering stem head nut
② Steering stem clamp bolt
③ Steering stem upper bracket
④ Front fork upper clamp bolt
⑤ Steering stem nut
⑥ Upper bearing
⑦ Lower bearing
⑧ Headlight bracket
⑨ Steering stem lower bracket
⑩ Front fork lower clamp bolt

NOTE:
When adjusting steering, refer to the page 286/369 of GS550 service manual.

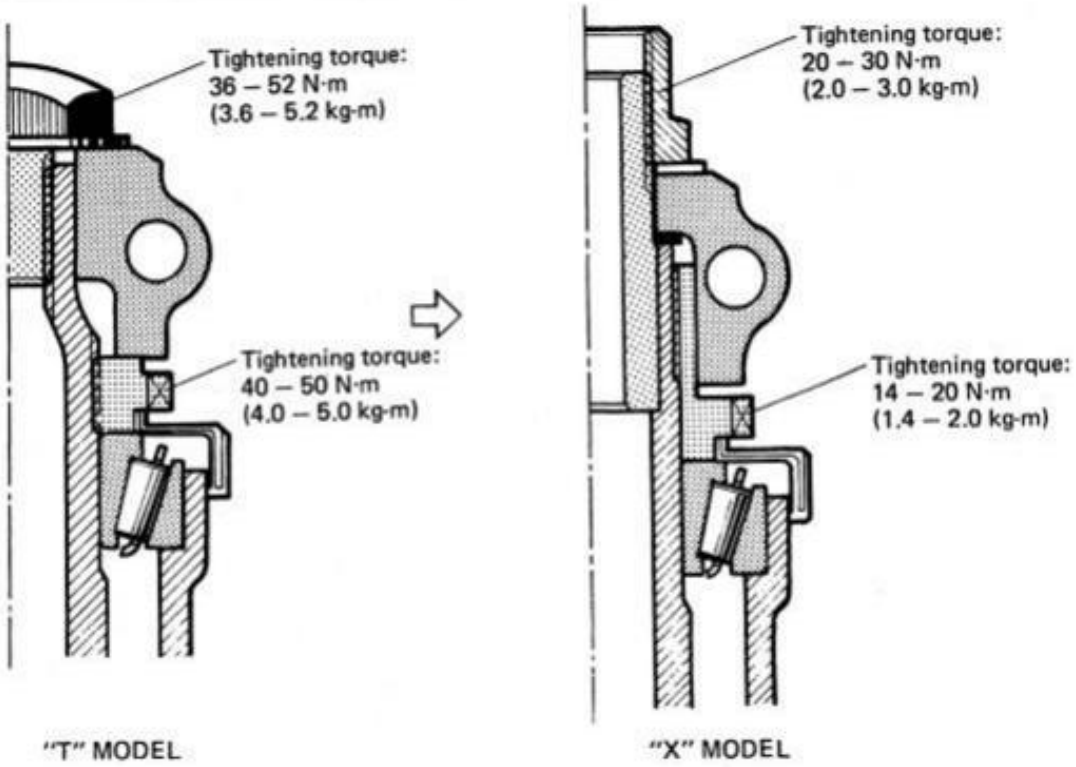

WIRING DIAGRAM GS550TX

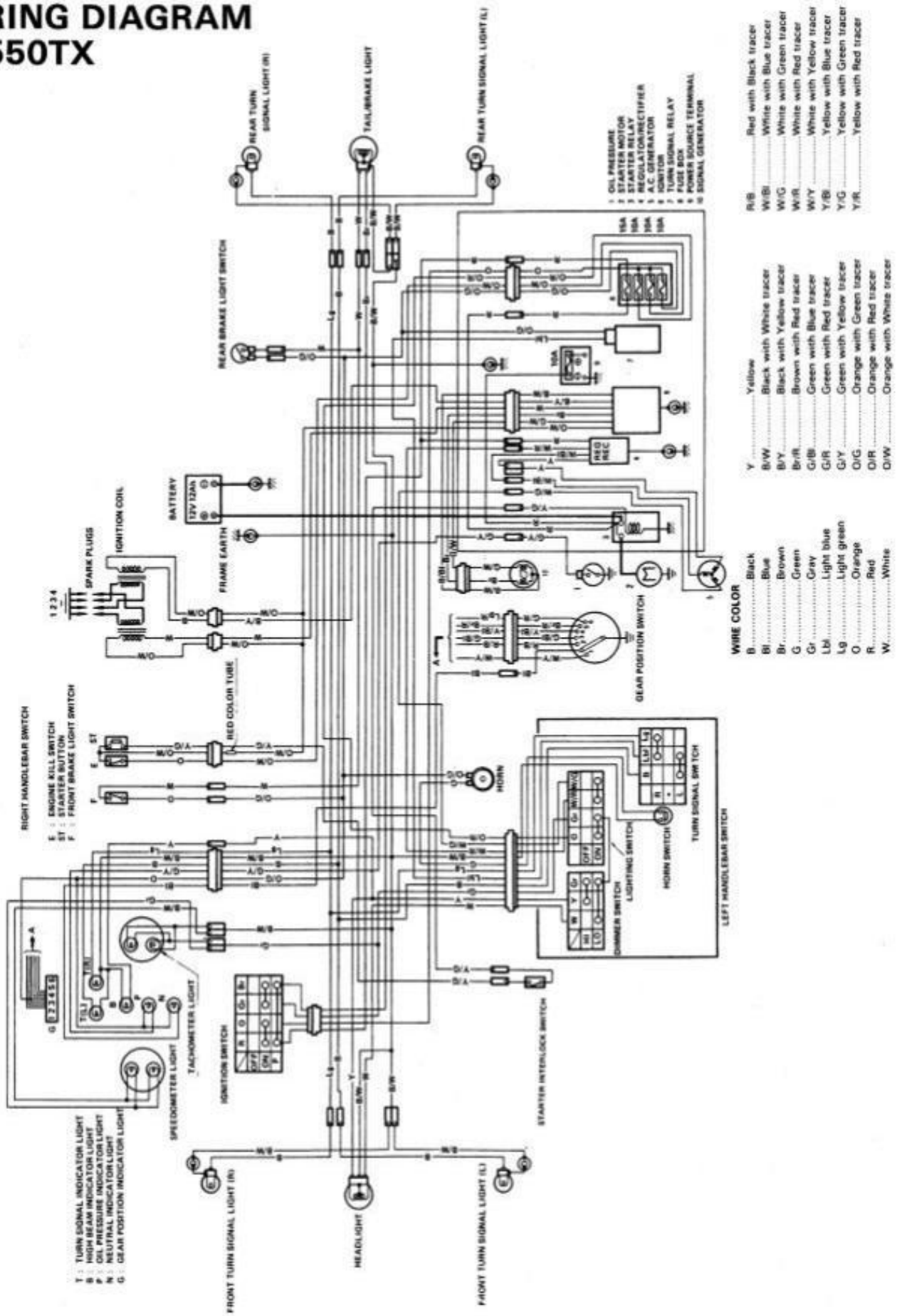

GS550LX

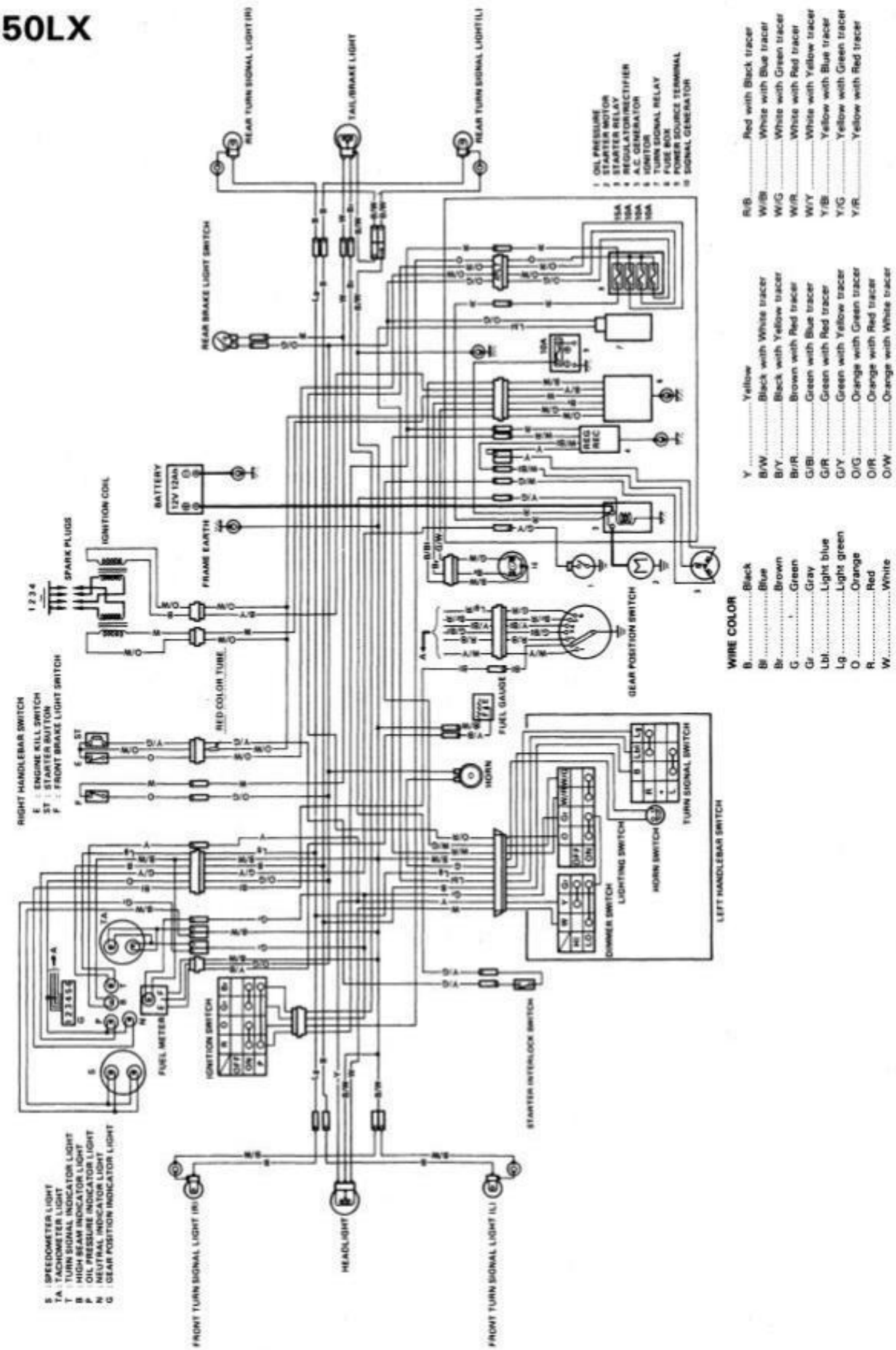
REAR TURN SIGNAL LIGHT (R)
TAIL/BRAKE LIGHT
REAR TURN SIGNAL LIGHT (L)
1 : OIL PRESSURE
2 : STARTER MOTOR
3 : STARTER RELAY
4 : REGULATOR/RECTIFIER
5 : A.C. GENERATOR
6 : IGNITOR
7 : TURN SIGNAL RELAY
8 : FUSE BOX
9 : POWER SOURCE TERMINAL
10 : SIGNAL GENERATOR
REAR BRAKE LIGHT SWITCH
BATTERY
12V 12Ah
FRAME EARTH
IGNITION COIL
SPARK PLUGS
1 2 3 4
RED COLOR TUBE
GEAR POSITION SWITCH
FUEL GAUGE
HORN
RIGHT HANDLEBAR SWITCH
E : ENGINE KILL SWITCH
ST : STARTER BUTTON
F : FRONT BRAKE LIGHT SWITCH
TURN SIGNAL SWITCH
HORN SWITCH
LIGHTING SWITCH
DIMMER SWITCH
LEFT HANDLEBAR SWITCH
FUEL METER
IGNITION SWITCH
STARTER INTERLOCK SWITCH
S : SPEEDOMETER LIGHT
TA : TACHOMETER LIGHT
T : TURN SIGNAL INDICATOR LIGHT
B : HIGH BEAM INDICATOR LIGHT
P : OIL PRESSURE INDICATOR LIGHT
N : NEUTRAL INDICATOR LIGHT
G : GEAR POSITION INDICATOR LIGHT
FRONT TURN SIGNAL LIGHT (R)
HEADLIGHT
FRONT TURN SIGNAL LIGHT (L)
WIRE COLOR
B.....Black
Bl.....Blue
Br.....Brown
G.....Green
Gr.....Gray
Lbl.....Light blue
Lg.....Light green
O.....Orange
R.....Red
W.....White
Y.....Yellow
B/W.....Black with White tracer
B/Y.....Black with Yellow tracer
Br/R.....Brown with Red tracer
G/Bl.....Green with Blue tracer
G/R.....Green with Red tracer
G/Y.....Green with Yellow tracer
O/G.....Orange with Green tracer
O/R.....Orange with Red tracer
O/W.....Orange with White tracer
R/B.....Red with Black tracer
W/Bl.....White with Blue tracer
W/G.....White with Green tracer
W/R.....White with Red tracer
W/Y.....White with Yellow tracer
Y/Bl.....Yellow with Blue tracer
Y/G.....Yellow with Green tracer
Y/R.....Yellow with Red tracer

CABLE ROUTING

GS550T AND GS550L

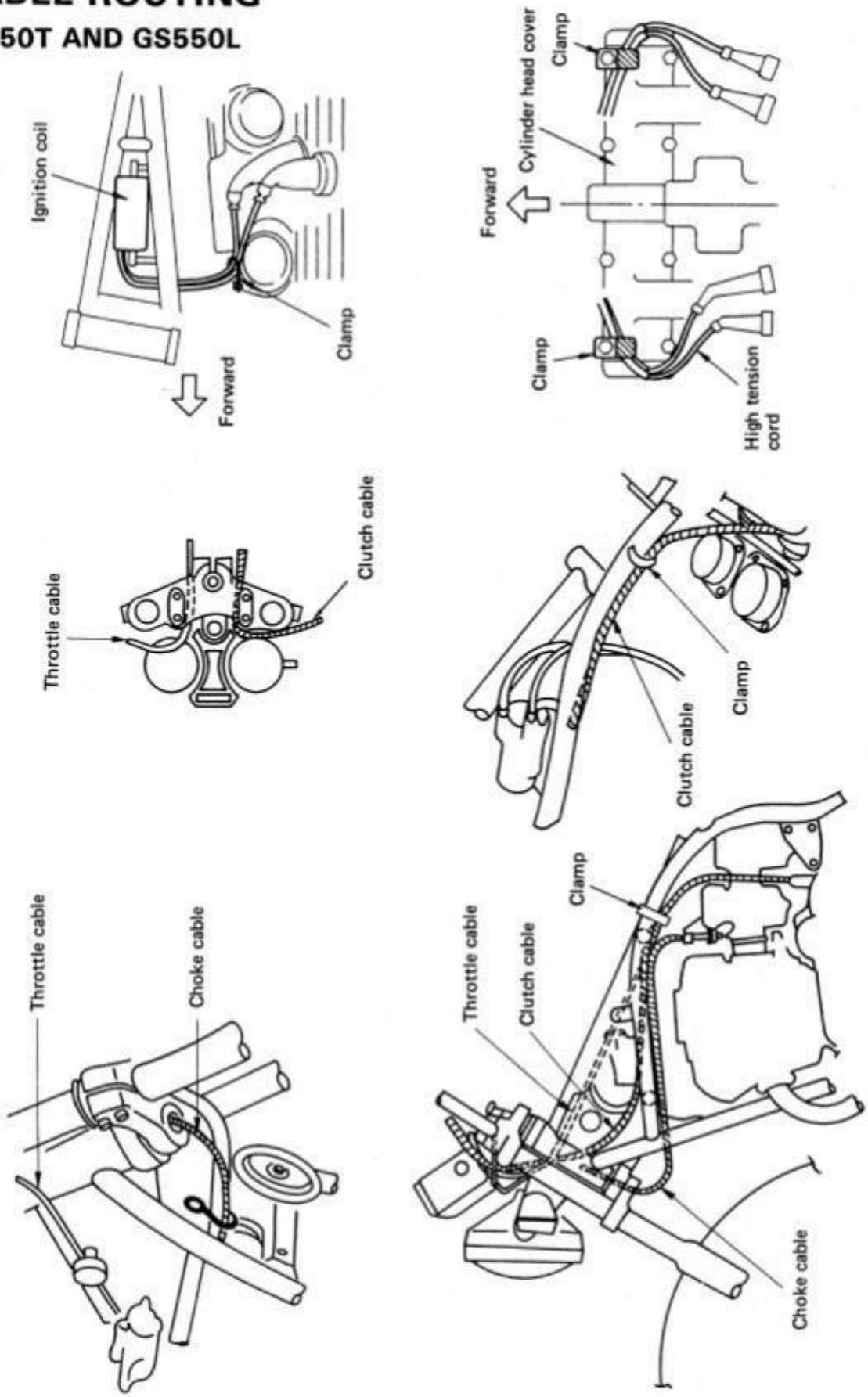

BRAKE HOSE ROUTING

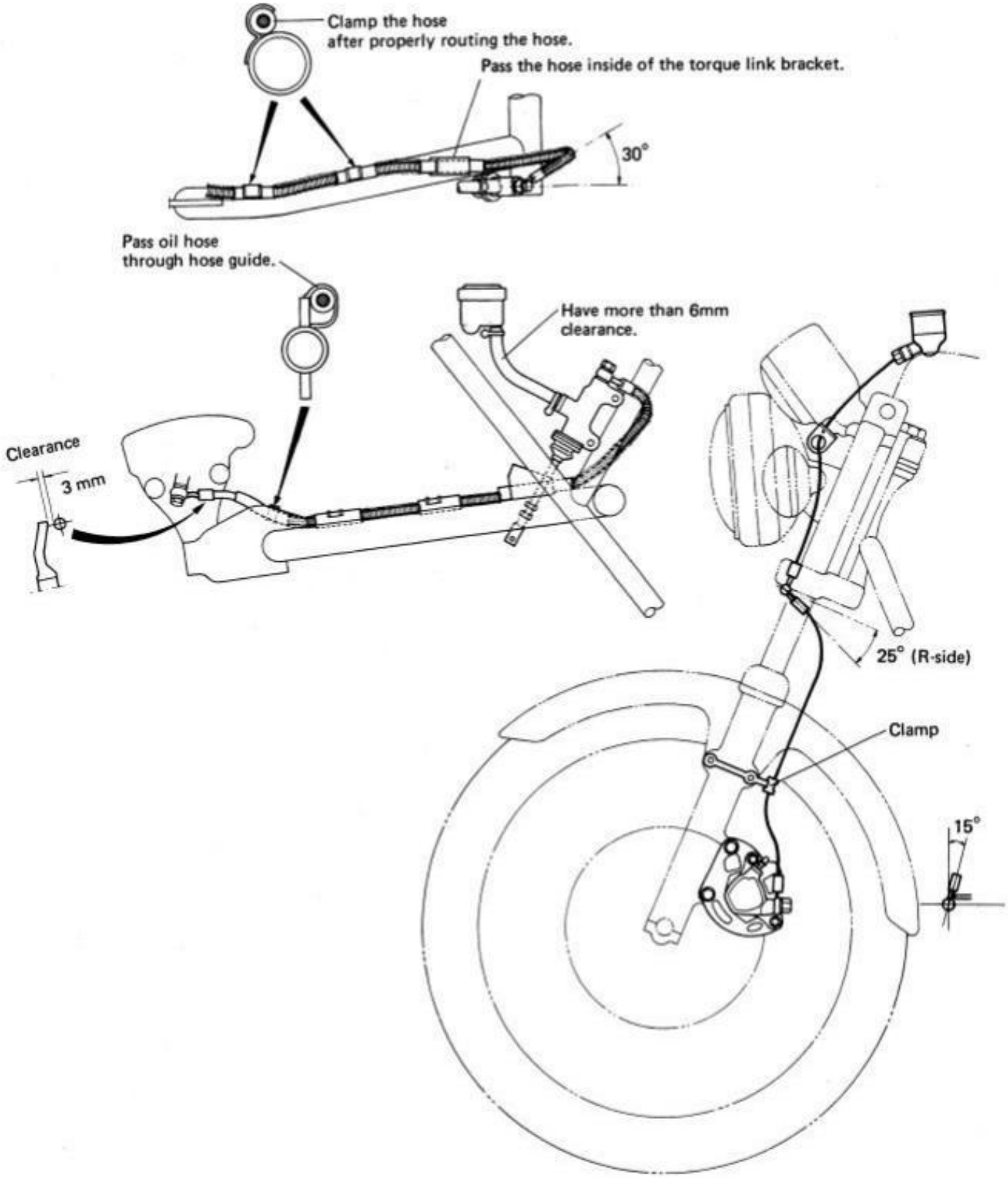

WIRE ROUTING

GS550T AND GS550L

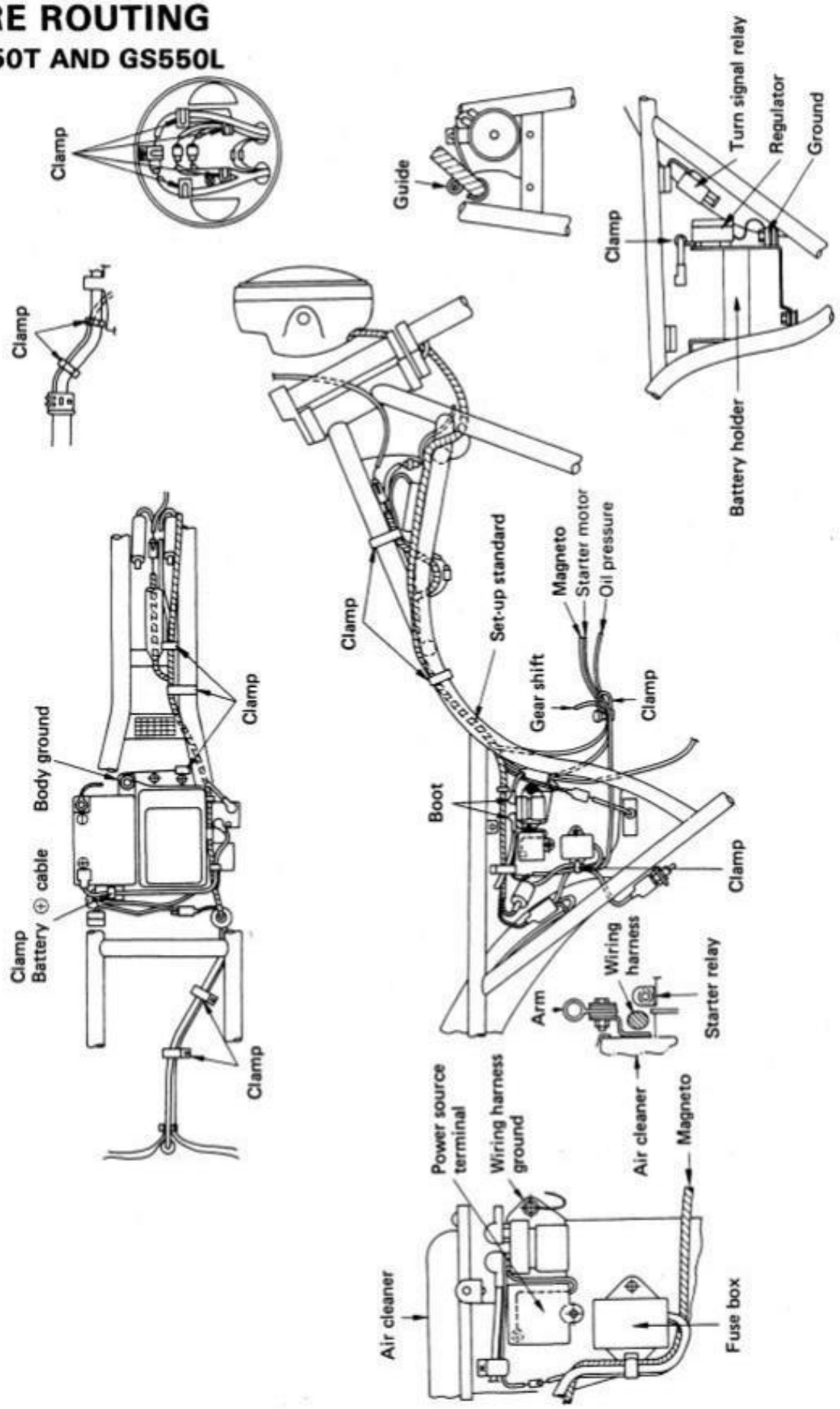

FOREWORD

The Suzuki GS550LZ is new 1982 model and incorporate many refinements and technical changes from the previous model. This new supplementary section has been produced to aid Suzuki mechanics in properly maintaining and repairing these model motorcycles, which incorporate so many new and innovative changes. These technical improvements have further enhanced the comfort, handling and overall performance of these outstanding model.
This supplement section has been written primarily for the experienced Suzuki mechanic but will also be very useful even for the apprentice mechanic and do-it-yourself mechanics. The entire manual should be thoroughly reviewed before any servicing is performed.

Please also refer to the sections of 1 through 19 of this Service Manual for all other areas of information not covered in this section.

IMPORTANT

All Suzuki motorcycles manufactured on or after January 1, 1978, were subject to Environmental Protection Agency emission regulations. These regulations set specific standards for emission control and also set new servicing requirements. This section contains pertinent information that should be carefully studied.

NOTE:
All service data, service specifications and tightening torque tables differing with those that apply to the "X" model are clearly indicated with an asterisk (*).

CONTENTS

VIEW OF SUZUKI GS550LZ 598
SPECIFICATIONS 599
SERVICE DATA 601
TORQUE TABLE 611
SPECIAL MATERIALS 614
PERIODIC MAINTENANCE 616
EMISSION CONTROL & REGULATIONS 617
COVER TIGHTENING BOLT 621
STARTER LEVER 621
FUEL GAUGE 622
FRONT FORK 624
FRONT MASTER CYLINDER 633
REAR BRAKE 637
WIRE AND CABLE ROUTING 639
WIRING DIAGRAM 641

VIEW OF SUZUKI GS550LZ

Right Side

Left Side

SPECIFICATIONS

DIMENSIONS AND DRY MASS

Overall length	*2 205 mm (86.8 in)
Overall width	870 mm (34.3 in)
Overall height	1 180 mm (46.5 in)
Wheelbase	*1 450 mm (57.1 in)
Ground clearance	140 mm (5.5 in)
Seat height	775 mm (30.5 in)
Dry mass	*199 kg (439 lbs)

ENGINE

Type	Four-stroke, air-cooled, DOHC
Number of cylinders	4
Bore	56.0 mm (2.205 in)
Stroke	55.8 mm (2.197 in)
Piston displacement	549 cm^3 (33.5 cu.in)
Compression ratio	8.6 : 1
Carburetor	MIKUNI BS32SS, four
Air cleaner	Polyurethane foam element
Starter system	Electric
Lubrication system	Wet sump

TRANSMISSION

Clutch		Wet multi-plate type
Transmission		6-speed constant mesh
Gearshift pattern		1-down 5-up
Primary reduction		1.977 (87/44)
Final reduction		3.266 (49/15)
Gear ratios,	Low	2.666 (32/12)
	2nd	1.777 (32/18)
	3rd	1.380 (29/21)
	4th	1.173 (27/23)
	5th	1.045 (23/22)
	Top	0.956 (22/23)
Drive chain		DAIDO D.I.D.50HDL or TAKASAGO RK50SHO, 108 links

* Asterisk mark indicates New Z model specifications.

CHASSIS

Front suspension	*Telescopic, pneumatic/coil spring, oil dampened
Rear suspension	Swinging arm, oil dampened, spring 5-way adjustable
Steering angle	40° (right and left)
Caster	60° 00'
Trail	112 mm (4.41 in)
Turning radius	2.5 m (8.2 ft)
Front brake	Disc brake
Rear brake	*Internal expanding
Front tire size	90/90-19 52H
Rear tire size	130/90-16 67H
Front tire pressure	200 kPa (2.00 kg/cm², 28 psi) (Normal solo riding)
Rear tire pressure	200 kPa (2.00 kg/cm², 28 psi) (Normal solo riding)

ELECTRICAL

Ignition type	Transistorized
Ignition timing	15° B.T.D.C. below 1 500 r/min and 40° B.T.D.C. above 2 350 r/min
Spark plug	NGK B8ES or NIPPON DENSO W24ES-U
Spark plug gap	0.6 – 0.8 mm (0.024 – 0.031 in) both NGK and NIPPON DENSO
Battery	12V 43.2 kC (12Ah)/10HR
Generator	Three-phase A.C. generator
Fuse	10/10/10/10/15A

CAPACITIES

Fuel tank including reserve		12 L (3.2 US gal)
	reserve	4.0 L (4.2 US qt)
Engine oil	change	2.4 L (2.5 US qt)
	filter change	2.6 L (2.7 US qt)
	overhaul	2.7 L (2.8 US qt)
Front fork oil		*239 ml (8.08 US oz) in each leg

NOTE:
Specifications subject to change without notice.

* Asterisk mark indicates New Z model specifications.

SERVICE DATA

VALVES + GUIDES

Unit: mm (in)

ITEM	STANDARD		LIMIT
Valve Diam.	IN.	32.0 (1.26)	—
	EX.	27.0 (1.06)	—
Valve lift	IN.	7.2 (0.28)	—
	EX.	7.0 (0.27)	—
Valve clearance or Tappet clearance (when cold)	IN. & EX.	0.03 – 0.08 (0.001 – 0.003)	—
Valve guide to Valve stem clearance	IN.	0.025 – 0.050 (0.0008 – 0.0020)	0.35 (0.014)
	EX.	0.030 – 0.060 (0.0012 – 0.0024)	0.35 (0.014)
Valve guide I.D.	IN. & EX.	7.000 – 7.015 (0.2756 – 0.2762)	—
Valve stem O.D.	IN.	6.965 – 6.980 (0.2742 – 0.2748)	—
	EX.	6.955 – 6.970 (0.2738 – 0.2744)	—
Valve stem runout	IN. & EX.	—	0.05 (0.002)
Valve head thickness	IN. & EX.	—	0.5 (0.02)
Valve stem end length	IN. & EX.	—	4.0 (0.16)
Valve seat width	IN. & EX.	0.9 – 1.1 (0.035 – 0.043)	—
Valve head radial runout	IN. & EX.	—	0.03 (0.001)
Valve spring free length (IN. & EX.)	INNER	—	33.9 (1.33)
	OUTER	—	41.3 (1.63)
Valve spring tension (IN. & EX.)	INNER	8.9 – 12.5 kg (19.6 – 27.6 lbs) at length 31 (1.2)	—
	OUTER	22.1 – 27.1 kg (48.7 – 59.7 lbs) at length 35 (1.4)	—

CAMSHAFT + CYLINDERHEAD

Unit: mm (in)

ITEM	STANDARD		LIMIT
Cam height	IN.	35.485 – 35.515 (1.3970 – 1.3982)	35.190 (1.3854)
	EX.	35.285 – 35.315 (1.3892 – 1.3904)	34.990 (1.3776)
Camshaft journal oil clearance	IN. & EX.	0.020 – 0.054 (0.0008 – 0.0021)	0.150 (0.0059)
Camshaft journal holder I.D.	IN. & EX.	22.000 – 22.013 (0.8661 – 0.8667)	——
Camshaft journal O.D.	IN. & EX.	21.959 – 21.980 (0.8645 – 0.8654)	——
Camshaft runout	IN. & EX.	——	0.10 (0.004)
Cam chain 20 pitch length		——	157.8 (6.213)
Cam chain pin (at arrow "3")		20 th pin	——
Cylinder head distortion		——	0.2 (0.008)

CYLINDER + PISTON + PISTON RING

Unit: mm (in)

ITEM			STANDARD	LIMIT
Compression pressure			9.0 – 13.0 kg/cm² (128 – 185 psi)	7.0 kg/cm² (100 psi)
Compression pressure difference			——	2.0 kg/cm² (28 psi)
Piston to Cylinder clearance			0.045 – 0.055 (0.0018 – 0.0022)	0.120 (0.0047)
Cylinder bore			56.000 – 56.015 (2.2047 – 2.2053)	56.085 (2.2081)
Piston Diam.			55.950 – 55.965 (2.2026 – 2.2031) Measure the 15 (0.59) from piston skirt end.	55.880 (2.2000)
Cylinder distortion			——	0.26 (0.010)
Piston ring free end gap	1st	N&T	Approx. 6.5 (0.26)	5.2 (0.20)
	2nd	N&T	Approx. 6.5 (0.26)	5.2 (0.20)
Piston ring end gap	1st		0.10 – 0.30 (0.004 – 0.012)	0.70 (0.03)
	2nd		0.10 – 0.30 (0.004 – 0.012)	0.70 (0.03)
Piston ring groove clearance	1st		——	0.180 (0.0071)
	2nd		——	0.150 (0.0059)
Piston ring groove width	1st		1.21 – 1.23 (0.047 – 0.048)	——
	2nd		1.21 – 1.23 (0.047 – 0.048)	——
	Oil		2.51 – 2.53 (0.099 – 0.100)	——
Piston ring thickness	1st		1.175 – 1.190 (0.0463 – 0.0469)	——
	2nd		1.170 – 1.190 (0.0461 – 0.0469)	——
Piston pin bore I.D.			16.002 – 16.008 (0.6300 – 0.6302)	16.030 (0.6311)
Piston pin O.D.			15.995 – 16.000 (0.6297 – 0.6300)	15.980 (0.6291)

CONROD + CRANKSHAFT

Unit: mm (in)

ITEM	STANDARD	LIMIT
Conrod small end I.D.	16.006 – 16.014 (0.6302 – 0.6305)	16.040 (0.6315)
Conrod deflection	——	3.0 (0.12)
Conrod big end side clearance	0.10 – 0.65 (0.004 – 0.026)	1.0 (0.039)
Crankshaft runout	——	0.10 (0.004)

OIL PUMP

ITEM	STANDARD	LIMIT
Oil pump reduction ratio	1.821 (87/44 x 35/38)	——
Oil pressure (at 60°C, 140°F)	Above 0.1 kg/cm² (1.42 psi) Below 0.3 kg/cm² (4.27 psi) at 3 000 r/min.	——

CLUTCH

Unit: mm (in)

ITEM	STANDARD	LIMIT
Clutch cable play	2 – 3 (0.08 – 0.12)	——
Clutch release screw	1/4 – 1/2 turn back	——
Drive plate thickness	2.9 – 3.1 (0.11 – 0.12)	2.6 (0.10)
Drive plate claw width	11.8 – 12.0 (0.46 – 0.47)	11.0 (0.43)
Driven plate thickness	1.6 ± 0.06 (0.06 ± 0.002)	——
Driven plate distortion	——	0.1 (0.004)
Clutch spring free length	——	36.5 (1.44)

TRANSMISSION

Unit: mm (in)

ITEM	STANDARD		LIMIT
Primary reduction	1.977 (87 / 44)		——
Final reduction	3.266 (49/15)		——
Gear ratios	Low	2.666 (32 / 12)	——
	2nd	1.777 (32 / 18)	——
	3rd	1.380 (29 / 21)	——
	4th	1.173 (27 / 23)	——
	5th	1.045 (23 / 22)	——
	Top	0.956 (22 / 23)	——
Shift fork to Groove clearance	0.1 – 0.3 (0.004 – 0.012)		0.5 (0.020)
Shift fork groove width	5.5 – 5.6 (0.217 – 0.220)		——
Shift fork thickness	5.3 – 5.4 (0.195 – 0.199)		——
Drive chain	Type	D.I.D.: 50HDL TAKASAGO: RK50SHO	——
	Links	108	——
	20 pitch length	——	320.0 (12.60)
Drive chain slack	20 – 30 (0.8 – 1.2)		——

CARBURETOR

ITEM		SPECIFICATION
Carburetor type		MIKUNI BS32SS
Bore size		32 (1.26)
I.D. No.		*47160
Idle r/min.		1 100 ± 100 r/min.
Fuel level		5.0 ± 0.5 (0.20 ± 0.02)
Float height		22.4 ± 1.0 (0.88 ± 0.04)
Main jet	(M.J.)	#92.5
Main air jet	(M.A.J.)	1.6
Jet needle	(J.N.)	4BEL2
Needle jet	(N.J.)	X-6
Pilot jet	(P.J.)	#40
By pass	(B.P.)	0.9, 0.7, 0.7
Pilot outlet	(P.O.)	0.7
Valve seat	(V.S.)	2.0
Starter jet	(G.S.)	#35
Pilot screw	(P.S.)	PRE-SET
Pilot air jet	(P.A.J.)	#150
Throttle cable play		0.5 – 1.0 (0.02 – 0.04)

* Asterisk mark indicates New Z model specifications.

ELECTRICAL

Unit: mm (in)

ITEM	SPECIFICATION	
Ignition timing	15° B.T.D.C. Below 1 500 ± 100 r/min. and 40° B.T.D.C. Above 2 350 ± 100 r/min.	
Firing order	1 · 2 · 4 · 3	
Spark plug	Type	NGK: B8ES N.D.: W24ES-U
	Gap	0.6 – 0.8 (0.024 – 0.031)
Spark performance	Over 8 (0.3) at 1 atm.	
Signal coil resistance	Approx.	G/W–B/W 60 – 80Ω
Ignition coil resistance	Primary	O/W–W or B/Y Approx. 3 – 5 Ω
	Secondary	Plug cap – Plug cap Approx. 30 – 35 kΩ
Generator No-Load voltage	More than 80 V (AC) at 5 000 r/min.	
Regulated voltage	14.0 – 15.5 V at 5 000 r/min.	
Starter motor	Brush length	Limit: 6 (0.24)
	Commutator under cut	Limit: 0.2 (0.008)
Starter relay resistance	3 – 4 Ω	
Battery	Type designation	YB10L – A2
	Capacity	12V 43.2kC (12Ah)/10HR
	Standard electrolyte S.G.	1.28 at 20°C (68°F)
Fuse size	Main	15A
	Headlight	10A
	Turn signal	10A
	Ignition	10A
	Output terminal	10A

BRAKE + WHEEL

Unit: mm (in)

ITEM		STANDARD	LIMIT
* Rear brake pedal free travel		20 – 30 (0.8 – 1.2)	—
Rear brake pedal height		20 (0.8)	—
* Brake drum I.D.	Rear	—	180.7 (7.11)
* Brake lining thickness	Rear	—	1.5 (0.06)
Brake disc thickness	Front	6.0 ± 0.2 (0.24 ± 0.008)	5.5 (0.22)
Brake disc runout	Front	—	0.30 (0.012)
Master cylinder bore	Front	14.000 – 14.043 (0.5512 – 0.5529)	—
Master cylinder piston diam.	Front	13.941 – 13.968 (0.5489 – 0.5499)	—
Brake caliper cylinder bore	Front	42.860 – 42.899 (1.6874 – 1.6889)	—
Brake caliper piston diam.	Front	42.785 – 42.810 (1.6844 – 1.6854)	—
Wheel rim runout	Axial	—	2.0 (0.08)
	Radial	—	2.0 (0.08)
Wheel axle runout	Front	—	0.25 (0.010)
	Rear	—	0.25 (0.010)
Tire size	Front	90/90-19 52H	—
	Rear	130/90-16 67H	—
Tire tread depth	Front	—	1.6 (0.06)
	Rear	—	2.0 (0.08)

* Asterisk mark indicates New Z model specifications.

SUSPENSION

Unit: mm (in)

ITEM	STANDARD	LIMIT
Front fork stroke	160 (6.3)	——
Front fork spring free length	——	528 (20.8)
Front fork oil level	*144 (5.7)	——
* Front fork air pressure S.T.D.	0.5 kg/cm² (7.11 psi)	——
Rear wheel travel	95 (3.7)	——
Swinging arm pivot shaft runout	——	0.3 (0.012)

FUEL + OIL + CAPACITY

ITEM	SPECIFICATION	
Fuel type	Use only unleaded or low-lead type gasoline of at least 85–95 pump octane ($\frac{R+M}{2}$ method) or 89 octane or higher rated by the Research Method.	
Fuel tank including reserve	12 L (3.2 US gal)	
reserve	4.0 L (4.2 US qt)	
Engine oil type	SAE 10W/40	
Engine oil capacity	Change	2 400 ml (2.5 US qt)
	Filter change	2 600 ml (2.7 US qt)
	Overhaul	2 700 ml (2.8 US qt)
Front fork oil type	Fork oil #15	
Front fork oil capacity (each leg)	*239 ml (8.08 US oz)	
Brake fluid type	DOT3 or DOT4	

* Asterisk mark indicates New Z model specifications.

TIRE PRESSURE

COLD INFLATION TIRE PRESSURE	NORMAL RIDING						CONTINUOUS HIGH SPEED RIDING					
	SOLO RIDING			DUAL RIDING			SOLO RIDING			DUAL RIDING		
	kPa	kg/cm²	psi	kPa	kg/cm²	psi	kPa	kg/cm²	psi	kPa	kg/cm²	psi
FRONT	200	2.00	28	225	2.25	32	200	2.00	28	250	2.50	36
REAR	200	2.00	28	225	2.25	32	225	2.25	32	280	2.80	40

WATTAGE

Unit: W (cp)

ITEM		SPECIFICATION
Headlight	HI	60
	LO	55
Tail/Brake light		8/23 (3/32)
Turn signal light		23 (32)
Speedometer light		3.4
Tachometer light		3.4
Fuelmeter light		*1.7
Turn signal indicator light		3.4
High beam indicator light		3.4
Neutral indicator light		3.4
Oil pressure indicator light		3.4
Gear position indicator light		1.4

* Asterisk mark indicates New Z model specifications.

TORQUE TABLE

ENGINE

ITEM	kg-m	lb-ft
Cylinder head cover bolt	0.7 – 1.1	5.0 – 8.0
Cylinder head bolt	0.7 – 1.1	5.0 – 8.0
Cylinder head nut	2.3 – 2.7	16.5 – 19.5
Camshaft bearing cap bolt	0.8 – 1.2	6.0 – 8.5
Camshaft sprocket bolt	*2.4 – 2.6	*17.5 – 19.0
Cam chain tensioner lock nut	1.0 – 1.2	7.0 – 8.5
Generator rotor bolt	6.0 – 7.0	43.5 – 50.5
Advance governor bolt	1.8 – 2.3	13.0 – 16.5
Starter motor bolt	0.4 – 0.7	3.0 – 5.0
Starter clutch bolt	1.5 – 2.0	11.0 – 14.5
Clutch sleeve hub nut	4.0 – 6.0	29.0 – 43.5
Clutch spring bolt	0.6 – 1.0	4.5 – 7.0
Oil strainer screw	0.4 – 0.7	3.0 – 5.0
Gear shifting cam stopper spring holder bolt	1.8 – 2.8	13.0 – 20.0
Gear shift arm stopper bolt	1.5 – 2.3	11.0 – 16.5
Crankcase bolt (6 mm)	0.6 – 1.0	4.5 – 7.0
Crankcase bolt (8 mm)	1.8 – 2.2	13.0 – 16.0
Engine mounting nut (8 mm)	1.3 – 2.3	9.5 – 16.5
Engine mounting nut (10 mm)	2.5 – 4.5	18.0 – 32.5
Exhaust pipe bolt	0.9 – 1.4	6.5 – 10.0
Muffler bolt	1.8 – 2.8	13.0 – 20.0
Gear shift lever bolt	0.6 – 1.0	4.5 – 7.0
Engine sprocket nut	5.0 – 7.0	36.0 – 50.5

* Asterisk mark indicates New Z model specifications.

CHASSIS

ITEM	kg-m	lb-ft
Handlebar clamp bolt	1.2 – 2.0	8.5 – 14.5
Steering stem upper clamp bolt	1.5 – 2.5	11.0 – 18.0
Front fork upper bracket bolt (R, L)	3.5 – 5.5	25.5 – 40.0
Front fork lower bracket bolt (R, L)	1.5 – 2.5	11.0 – 18.0
Front fork damper rod bolt	1.5 – 2.5	11.0 – 18.0
* Steering stem head bolt	3.6 – 5.2	26.0 – 37.5
Front fork axle holder nut	1.5 – 2.5	11.0 – 18.0
Front axle shaft nut	3.6 – 5.2	26.0 – 37.5
Swinging arm pivot nut	5.0 – 8.0	36.0 – 58.0
Rear torque link nut	2.0 – 3.0	14.5 – 21.5
Rear axle nut	5.0 – 8.0	36.0 – 58.0
Rear shock absorber nut	2.0 – 3.0	14.5 – 21.5
Footrest bolt	2.7 – 4.3	19.5 – 31.0
Front brake caliper mounting bolt	2.0 – 4.0	14.5 – 29.0
Front brake disc plate bolt	1.5 – 2.5	11.0 – 18.0
Front brake caliper axle bolt	4.0 – 5.5	29.0 – 40.0
Front brake master cylinder mounting bolt	0.5 – 0.8	3.5 – 6.0
Front brake hose union bolt	1.3 – 1.8	9.5 – 13.0
Front brake air bleeder bolt	0.6 – 0.9	4.5 – 6.5
* Rear brake cam lever bolt	0.5 – 0.8	3.5 – 6.0

* Asterisk mark indicates New Z model specifications.

TIGHTENING TORQUE CHART

For other bolts and nuts not listed, refer to this chart:

Bolt Diameter	Conventional or "4" marked bolt		"7" marked bolt	
Ⓐ (mm)	kg-m	lb-ft	kg-m	lb-ft
4	0.1 – 0.2	0.7 – 1.5	0.15 – 0.3	1.0 – 2.0
5	0.2 – 0.4	1.5 – 3.0	0.3 – 0.6	2.0 – 4.5
6	0.4 – 0.7	3.0 – 5.0	0.8 – 1.2	6.0 – 8.5
8	1.0 – 1.6	7.0 – 11.5	1.8 – 2.8	13.0 – 20.0
10	2.2 – 3.5	16.0 – 25.5	4.0 – 6.0	29.0 – 43.5
12	3.5 – 5.5	25.5 – 40.0	7.0 – 10.0	50.5 – 72.5
14	5.0 – 8.0	36.0 – 58.0	11.0 – 16.0	79.5 – 115.5
16	8.0 – 13.0	58.0 – 94.0	17.0 – 25.0	123.0 – 181.0
18	13.0 – 19.0	94.0 – 137.5	20.0 – 28.0	144.5 – 202.5

Conventional bolt

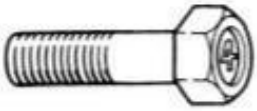

"4" Marked bolt

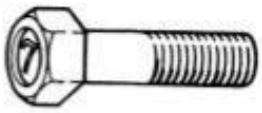

"7" Marked bolt

SPECIAL MATERIALS

The materials listed below are needed for maintenance work on the GS550L, and should be kept on hand for ready use. They supplement such standard materials as cleaning fluids, lubricants, emery cloth and the like. How to use them and where to use them are described in the text of this manual.

Material	Part
 99000-32040 THREAD LOCK CEMENT	* Carburetor bracket screw . . . . . 8 pcs. * Oil filter cap nut . . . . . 3 pcs. * Front fork damper rod bolt . . . . . 2 pcs. * Cam shaft end cap screw . . . . . 8 pcs.
 99104-32050 THREAD LOCK "1363C"	* Generator lead wire guide screw . . . . . 3 pcs. * Generator stator securing screw . . . . . 3 pcs. * Gearshift cam stopper bolt . . . . . 2 pcs. * Countershaft bearing retainer . . . . . 4 pcs. * Starter motor securing bolt . . . . . 2 pcs. * Gearshift fork shaft stopper screw . . . . . 1 pc. * Engine oil pump set screw . . . . . 4 pcs.
 99104-32020 THREAD LOCK SUPER "1361A"	* Gearshift cam retainer screw . . . . . 1 pc. * Cam chain sprocket allen bolt . . . . . 2 pcs. * Cam chain guide bolt . . . . . 1 pc. * Starter clutch allen bolt . . . . . 3 pcs. * Gearshift stopper . . . . . 1 pc. * Muffler cover screw . . . . . 4 pcs.
 99104-32090 THREAD LOCK SUPER "1332B"	* Generator rotor securing bolt . . . . . 1 pc.
 99104-32030 THREAD LOCK SUPER "1363A"	* Camshaft sprocket bolt . . . . . 4 pcs.

Material	Part
 99000-25030 SUZUKI SUPER GREASE "A"	• Oil seals • Throttle grip • Cables (speedometer and tachometer) • Clutch release mechanism • Gearshift lever linkage and shaft • Speedometer gearbox • Wheel bearings • Swinging arm bearing and dust seal • Rear brake cam • Brake pedal shaft • Governor link • Centerstand spacer • Steering stem bearings
 99104-31140 SUZUKI BOND No. 1207B	• Mating surfaces of upper and lower crankcase. • Front fork damper rod bolt.
 99000-25100 SUZUKI SILICONE GREASE	• Apply to caliper axle bolt
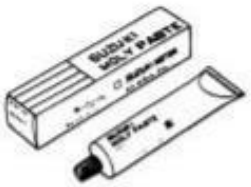 99000-25140 SUZUKI MOLY PASTE	• Valve stem • Cam shaft • Chain tensioner adjuster shaft

USE OF GENUINE SUZUKI PARTS

To replace any part of the machine, use a genuine SUZUKI replacement part. Imitation parts or parts supplied from any other source than SUZUKI, if used to replace SUZUKI parts can reduce the machine's performance and, even worse, could induce costly mechanical troubles.

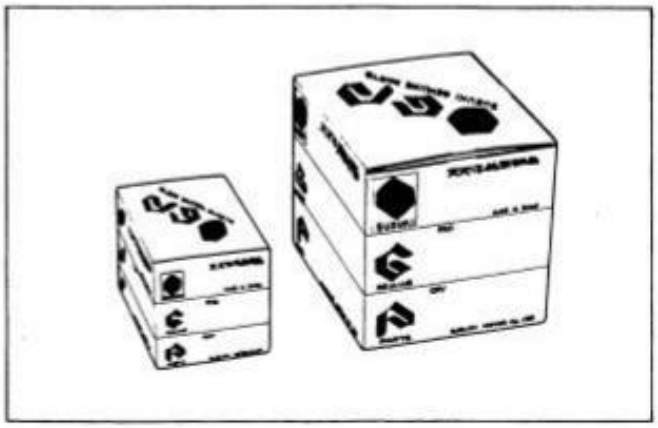

PERIODIC MAINTENANCE

IMPORTANT: The periodic maintenance intervals and service requirements have been established in accordance with EPA regulations. Following these instructions will ensure that the motorcycle will not exceed emission standards and it will also enhance the reliability and performance of the motorcycle.

NOTE:
Vehicles operated under severe conditions may require more frequent servicing.

The chart below lists the recommended intervals for all the required periodic service work necessary to keep the motorcycle operating at peak performance and to maintain proper emission levels. Mileages are expressed in terms of kilometers, miles and time for your convenience.

PERIODIC MAINTENANCE SCHEDULE

INTERVAL: THIS INTERVAL SHOULD BE JUDGED BY ODOMETER READING OR MONTHS WHICHEVER COMES FIRST	Mile	600	4 000	7 500	11 000	15 000
	Km	1 000	6 000	12 000	18 000	24 000
	Month	2	12	24	36	48
Battery (specific gravity of electrolyte)		–	I	I	I	I
Cylinder head nuts and exhaust pipe bolts		T	T	T	T	T
Air cleaner element		–	C	C	C	C
Tappet clearance		I	I	I	I	I
Spark plugs		–	C	R	C	R
Fuel line		Replace every two years				
Engine oil and oil filter		R	R	R	R	R
Carburetor idle r/min		I	I	I	I	I
Clutch		I	I	I	I	I
Drive chain		I	I	I	I	I
		Clean and lubricate every 600 miles (1 000 km)				
Brake hose		Replace every two years				
Brake		I	I	I	I	I
Tires		I	I	I	I	I
Steering stem		I	I	I	I	I
Chassis bolts and nuts		T	T	T	T	T

NOTE: T = Tighten, I = Inspect, R = Replace, C = Clean

EMISSION CONTROL & REGULATIONS

EMISSION REGULATIONS

On February 4, 1977, Federal Emission Regulations for motorcycles that may be licensable took effect. The regulations provided for a gradual, multi-step application of stricter emission limits beginning with all effected motorcycles manufactured after January 1, 1978, culminating with the present 1980 emission level restrictions. For the 1980 and succeeding years one set of emission limits is in effect. They are as follows:

1980 EMISSION LIMITS

CATEGORIES	HYDROCARBONS (HC)	CARBON MONOXIDE
All motorcycles 50 cc – Larger	5.0 Grams/Kilometer (8.0 Grams/Mile)	12 Grams/Kilometer (19.3 Grams/Mile)

Emission-controlled motorcycles which are subject to the emission regulations are those motorcycles which are equipped with a headlight, taillight, stop light and which have an engine displacement larger than 50 cc.

Suzuki Motor Company performed all the necessary testing and certification of emission-controlled models in strict compliance with the E.P.A. testing regulations. Suzuki motorcycle dealers are not required to either test or certify emission levels on any motorcycles as Suzuki Motor Company is legally responsible for the entire certification procedure.

E.P.A. regulations also provide fines for individuals who alter, render inoperative or improperly service emission-controlled motorcycles ranging up to $10,000.00 per motorcycle. It is essential that the individual servicing this emission-controlled motorcycle review thoroughly all the service procedures presented in this manual. Under no circumstances should the recommended service procedures be deviated from nor adjustments made which are not in accordance with the factory specifications or service procedures.

EMISSION CONTROL CARBURETOR COMPONENTS

GS550 motorcycles are equipped with precision, manufactured carburetors for emission level control. These carburetors require special mixture control components and other precision adjustments to function properly.

There are several carburetor mixture control components in each carburetor assembly. Three (3) of these components are machined to much closer tolerances than standard machined carburetor jets. These three (3) particular jets – MAIN JET, NEEDLE JET, PILOT JET – must not be replaced by standard jets. To aid in identifying these three (3) jets a different design of letter and number are used. If replacement of these close tolerance jets becomes necessary, be sure to replace them with the same type close tolerance jets marked as in the examples shown below.

The jet needle is also of special manufacture. Only one clip position is provided on the jet needle. If replacement becomes necessary the jet needle may only be replaced with an equivalent performing replacement component. Suzuki recommends that Genuine Suzuki Parts be utilized whenever possible for the best possible performance and durability.

Conventional figures Used On Standard Tolerance Jet Components	1 2 3 4 5 6 7 8 9 0
Emission Type Figures Used On Close Tolerance Jet Components	1 2 3 4 5 6 7 8 9 0

The carburetor specification for the emission-controlled GS550L are as follows.

Carburetor I.D. No.	Main Jet	Needle Jet	Jet Needle	Pilot Jet	Pilot Screw
47160	#92.5	X-6	4BEL2	#40	PRE-SET DO NOT ADJUST

The pilot screw is pre-set by the factory utilizing specialized testing and adjusting procedures. The pilot screw is not adjustable as the idle circuit is "sealed" after factory adjustment. Adjusting, interferring with, improper replacement, or resetting of any of the carburetor components may adversely affect carburetor performance and cause the motorcycle to exceed the exhaust emission level limits. If persons, who are unaware of these special carburetor servicing requirements tamper with the carburetors the Suzuki dealer should restore the carburetors to their original condition or if unable to effect repairs, contact the distributors representative for further technical information and assistance.

GENERAL EMISSION INFORMATION

There are three different types of regulated exhaust emissions. They are:

Hydrocarbons (HC)
Carbon Monoxide (CO)
Oxides of Nitrogen (NOx)

Automobiles must meet specific emission standards for all three of these pollutants. Motorcycles must only meet the requirements for the following:

Hydrocarbons (HC)
Carbon Monoxide (CO)

HC exhaust emissions are basically unburned fuel vapors which have passed through the engine and escaped the combustion process.

CO exhaust emissions are formed during an incomplete combustion cycle as a result of a rich air/fuel mixture. The only way that CO can be produced is by the combustion cycle.

Total NOx emissions from all motorcycles is considered negligible. The EPA states that total NOx emission from motorcycles by 1990 will only amount to approximately 0.5%. NOx is formed during the combustion process at high combustion chamber temperatures.

CARBON MONOXIDE

Carbon monoxide is a product of an incomplete combustion cycle. CO is measured in grams per mile or kilometer and also in percentage (%).

The most common cause of CO is rich carburetion. As the mixture is richened excessively, the CO amount increases proportionately. Engine oil is also a hydrocarbon, so engine problems which lead to oil burning increase carbon monoxide.

CARBURETION MALFUNCTION

1. Air Cleaner – Dirty or over oiled.
2. Idle Mixture – Adjusted incorrectly.
3. Idle Speed – Too high or low.
4. Fuel Level – Sticking float, leaking needle, incorrect setting.
5. Choke – Leaking or linkage sticking.
6. Synchronization – Improper balance on multi cylinders.

ENGINE MALFUNCTIONS

1. Valve Seals – Leaking or torn.
2. Valve Guide – Worn and leaking excess oil.
3. Gaskets – Leaking oil into combustion chamber.

HYDROCARBONS

Hydrocarbons are unburned gasoline vapors and can be measured in two different ways. The first is to measure the weight of the pollutants over a specific distance such as grams per mile or grams per kilometer. The second method is to measure the concentration of HC in the exhaust gas in parts per million (PPM).

The most common cause of high HC emissions are ignition system problems. If the ignition system fails to ignite the fuel mixture properly, then raw gasoline vapors will pass through the engine into the exhaust system. Listed are the most common ignition problems which occur and which can affect HC emission output.

IGNITION SYSTEM MALFUNCTIONS

1. Spark Plugs – Fouled, dirty, improper type or improperly gapped.
2. Ignition timing – Advanced or Retarded.
3. Timing Advance – Too fast or too slow an advance rate.
4. Battery – Low charge or faulty.

Carburetion can also lead to high HC emissions if the mixture is either excessively rich or excessively lean.

MIXTURE-RELATED MALFUNCTIONS

1. Air Cleaner – Dirty, over oiled or torn.
2. Jets – Clogged, restricted or incorrect size.
3. Float Level – Level too low (lean) or too high (rich).
4. Choke – Leaking choke plunger or sticking linkage.
5. Air Leaks – Intake manifolds, engine gaskets and other sealing surfaces.
6. Synchronization – Unbalanced on multi-cylinder machines.
7. Exhaust System – Restricted flow or improper exhaust system.

Engine wear or damage can also cause high HC emissions.

1. Rings – Low compression, leakage into crankcase.
2. Valves – Improper adjustment, bent stem or burnt.
3. Gaskets – Leaking, loss of compression.
4. Crank Seals – Leaking.
5. Oil Consumption – Worn valve guides, worn rings, clogged crankcase breather.
6. Oil – Improper engine oil.

COVER TIGHTENING BOLT

Cover tightening bolts has been changed from screw to bolt.

Clutch cover
Conact breaker cover
Generator cover
Engine sprocket cover
Startor motor cover

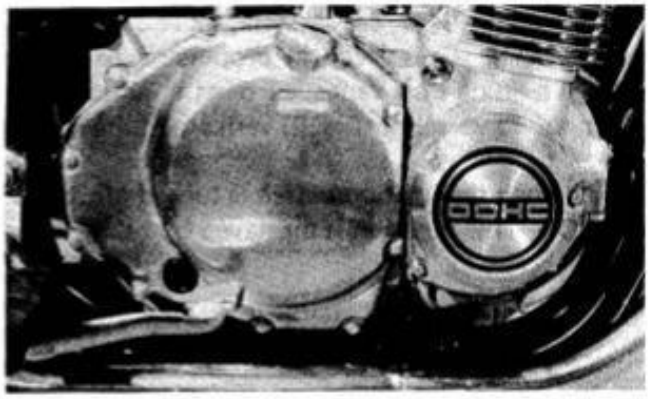

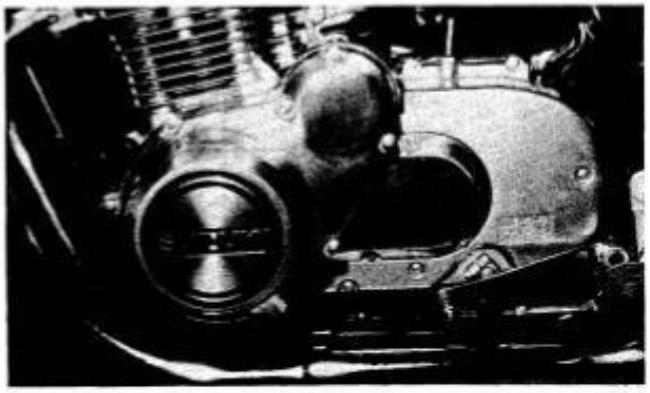

NOTE:
When unscrewing or tightening bolt use a special tool.

09900-06711	"T" type box wrench 7mm
09900-00302	"T" type box wrench 8mm

STARTER LEVER

- Remove the starter lever and starter cable.

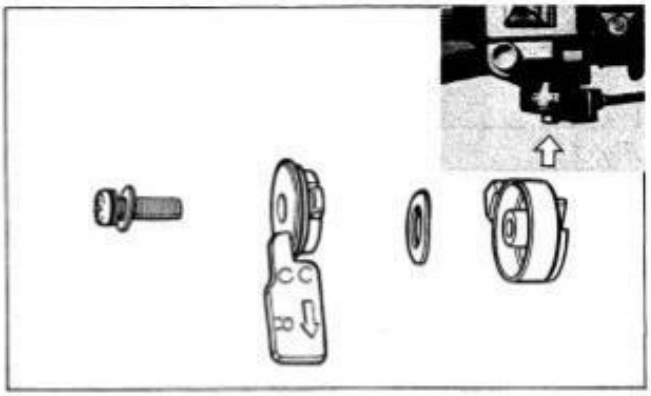

- Apply Suzuki Super Grease "A" to the washer before tightening the screw.

99000-25010	Suzuki Super Grease "A"

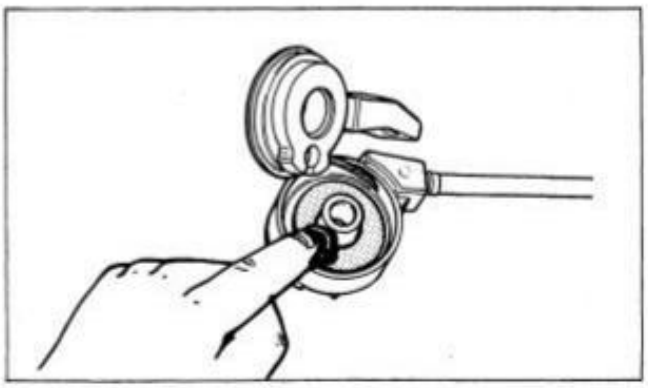

FUEL GAUGE

As shown in Fig. 1, coils n1, n2, n3 and n4 are set in the fuel gauge. When the ignition switch is ON, the float in the tank is displaced in proportion to the change in the amount of gasoline, the resistance of the fuel gauge sending unit varies, currents I_1 and I_2 vary, strength of the magnetic field generated by the coils vary, compound vector H (Fig. 2) varies, and the magnet of the flow meter rotates to deflect the pointer.

Even when the ignition switch is turned off, the pointer remains in the position where it was when the switch was ON. This function is displayed by using high-viscosity oil and a balanced magnet.

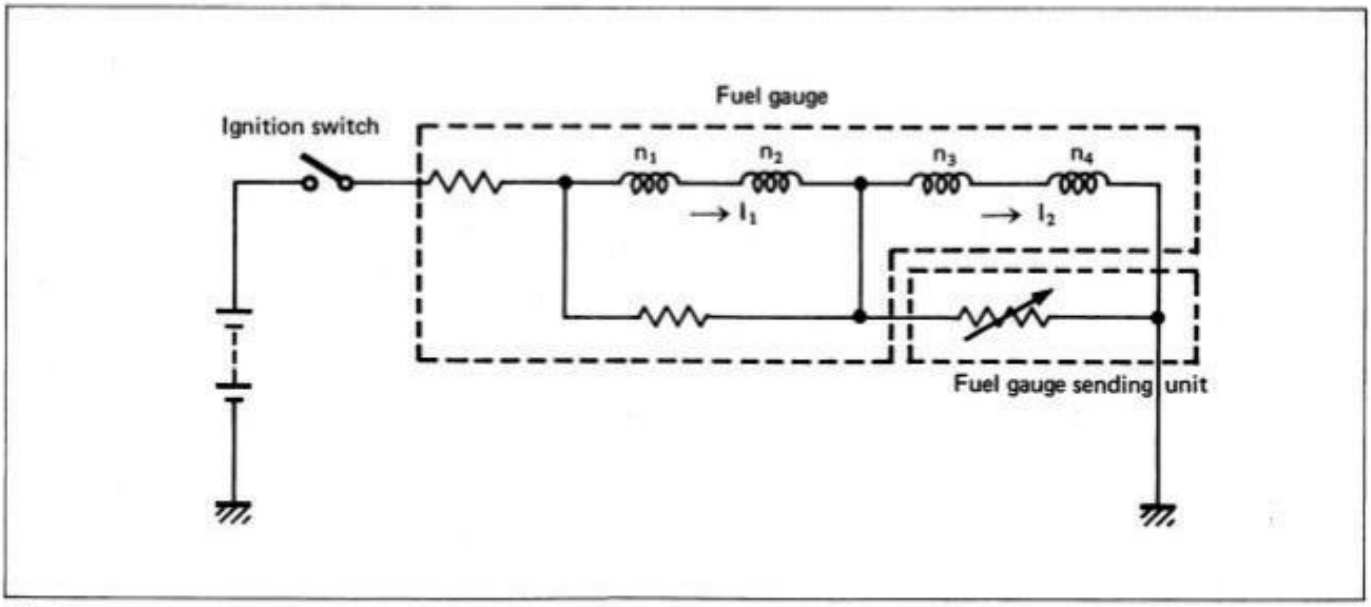

Fig. 1

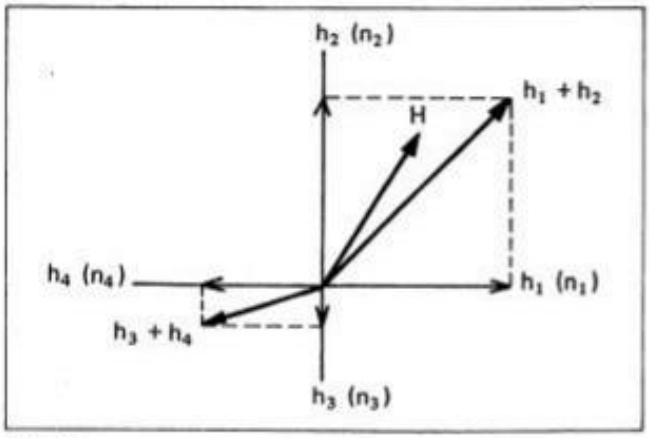

Fig. 2

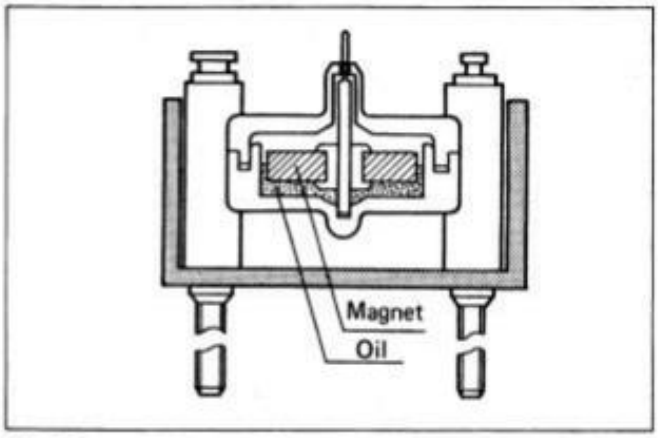

Fig. 3

INSPECTION

FUEL GAUGE

With the ignition switch turned on, disconnect two lead wires from the fuel gauge sending unit. Connect the lead wires on the main wiring harness side together and check the fuel gauge. If "F" is indicated, the fuel gauge is in good condition.

FUEL GAUGE SENDING UNIT

Disconnect the lead wires coming out of the sending unit and check the resistance between the two wires.

If the resistance measured is incorrect, replace the assembly with new one.

FULL	Approx. 2 – 7Ω
HALF (1/2)	Approx. 25 – 40Ω
EMPTY	Approx. 90 – 110Ω

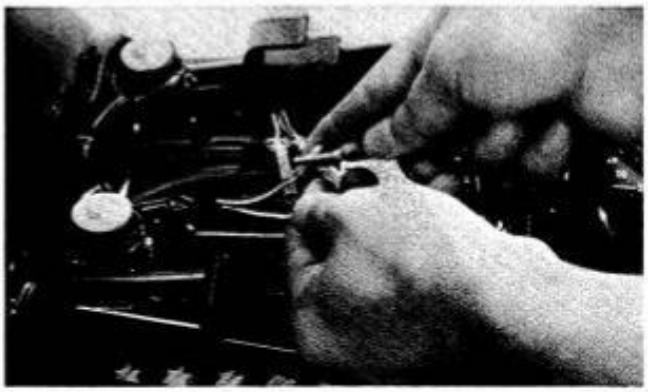

FRONT FORK

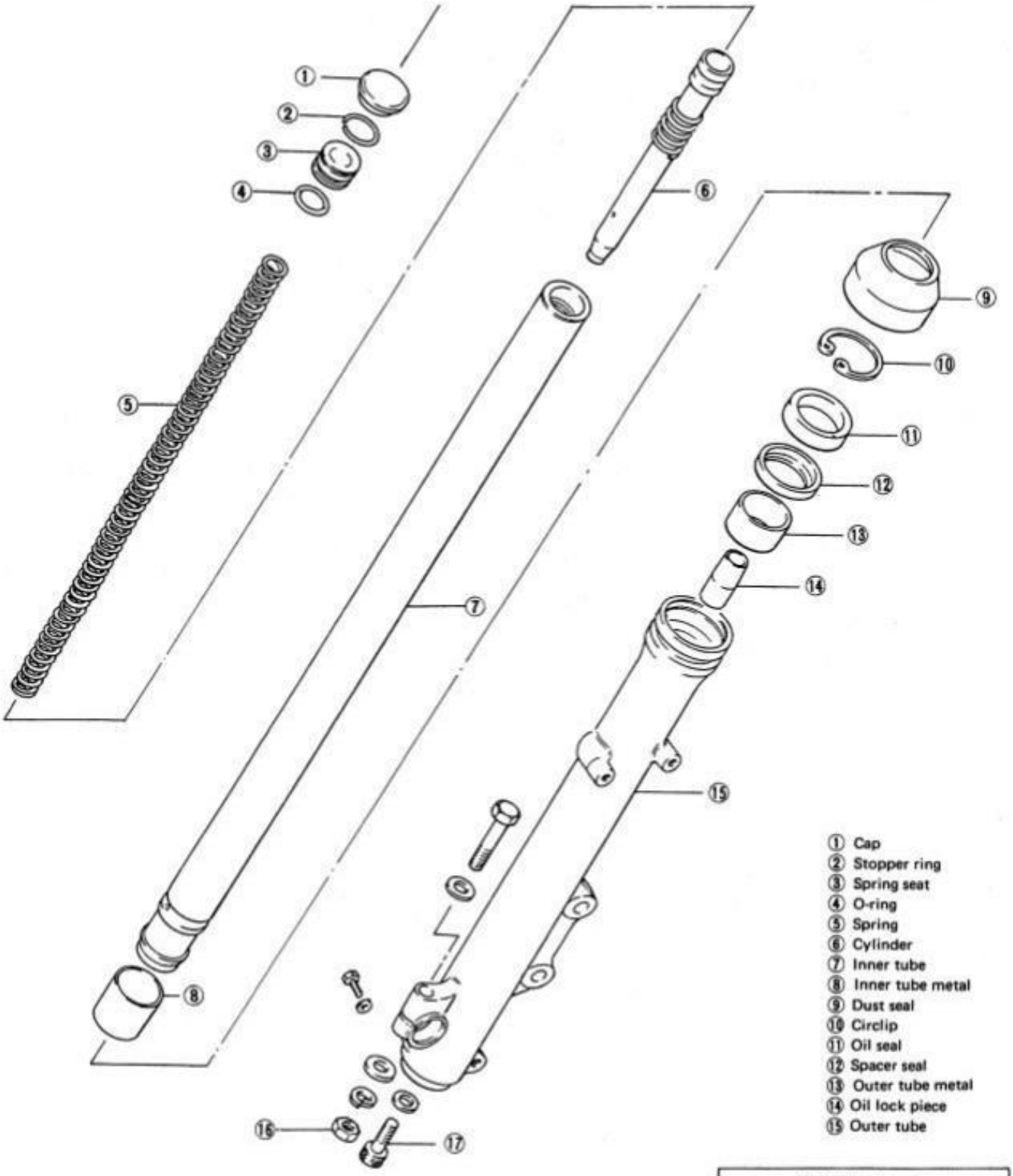

① Cap
② Stopper ring
③ Spring seat
④ O-ring
⑤ Spring
⑥ Cylinder
⑦ Inner tube
⑧ Inner tube metal
⑨ Dust seal
⑩ Circlip
⑪ Oil seal
⑫ Spacer seal
⑬ Outer tube metal
⑭ Oil lock piece
⑮ Outer tube

Tightening torque		
	kg-m	lb-ft
⑯	1.5 – 2.5	11.0 – 18.0
⑰	1.5 – 2.5	11.0 – 18.0

REMOVAL AND DISASSEMBLY

- Support the machine by the center stand and a jack.

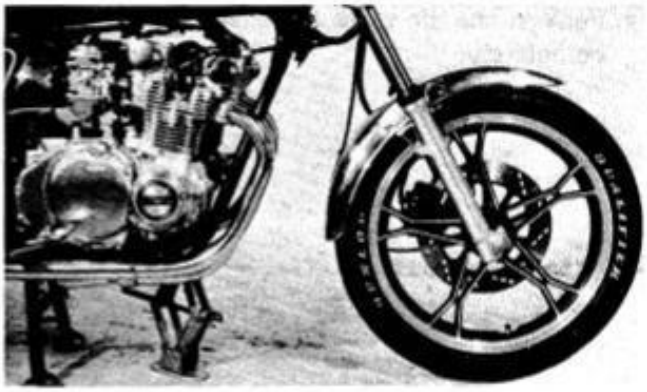

- Remove the front brake caliper and speedometer cable guide.

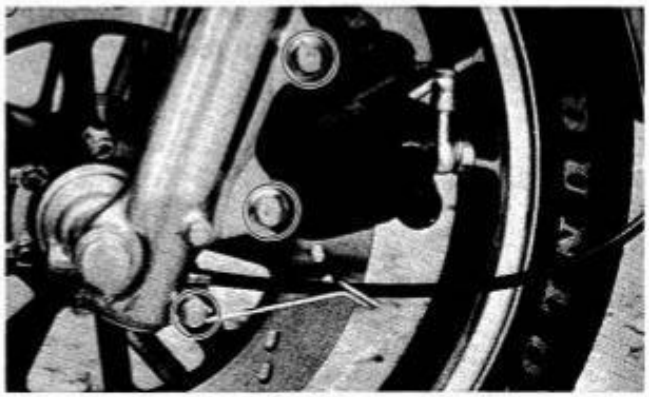

- Pull off the cotter pin ① and remove axle nut ② and drow out the axle shaft.
- Remove the front wheel.

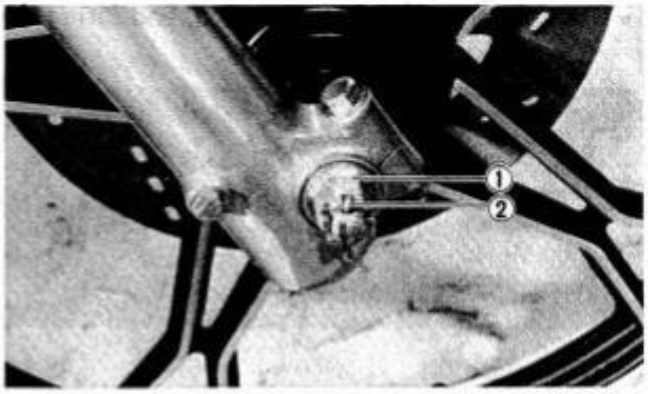

- Remove four bolts and front fender.

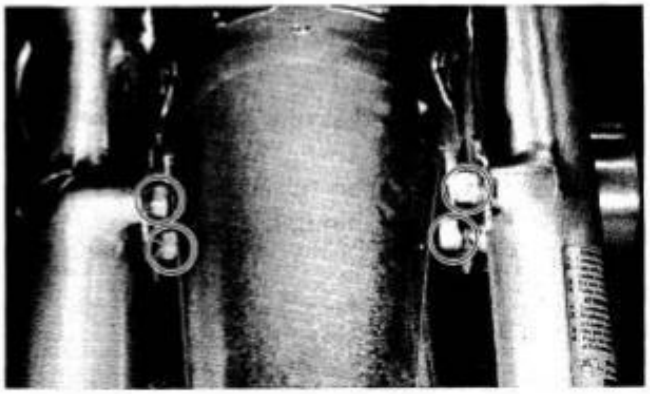

- Push in the air valve to relieve the air pressure completely.

- Loosen the front fork upper and lower clamp bolts and pull down the front forks.

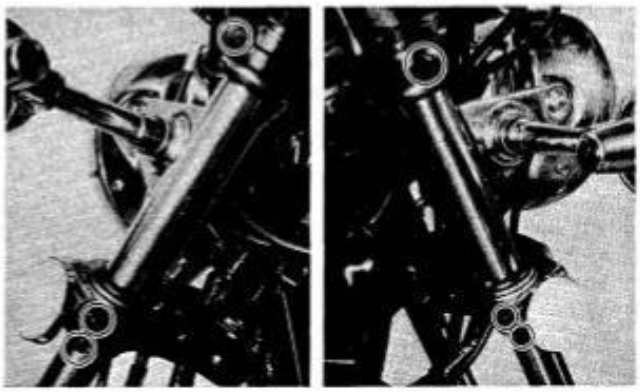

- Remove the cap, stopper ring ① and spring seat ② , and draw out fork spring.

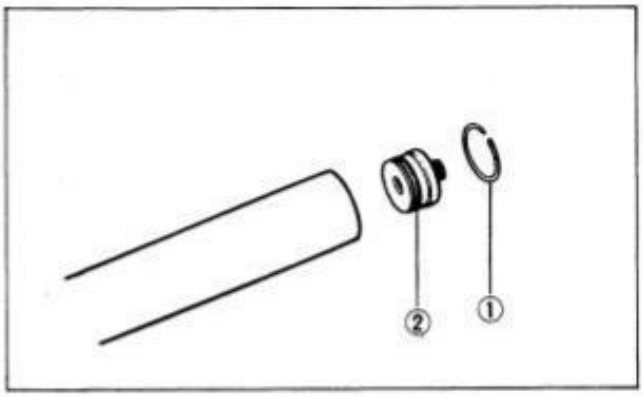

- Invert the fork and stroke it several times to let out the oil inside.
- Under this condition (inverted condition), hold the fork for a few minutes.

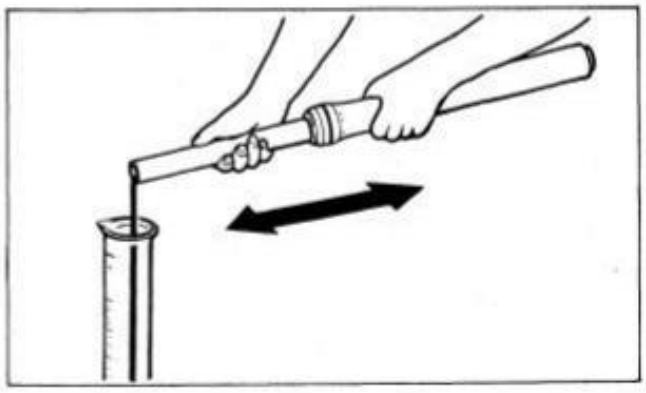

- Draw out the dust seal and circlip by using special tool.

09900-06108	Snap ring pliers

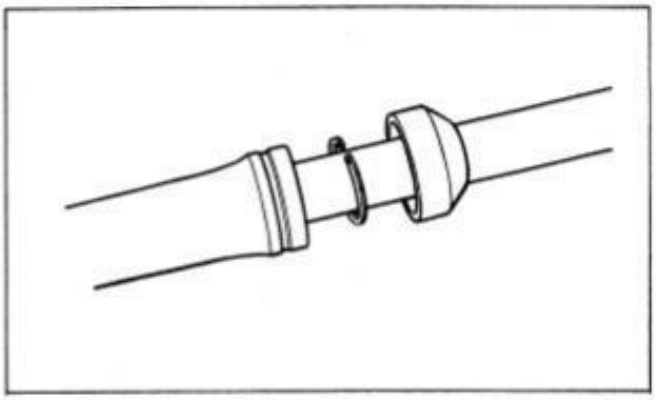

- Remove the damper rod securing bolt by using special tools.

09940-34520	"T" handle
09940-34561	Attachment "D"
09914-25811	"T" type hexagon wrench

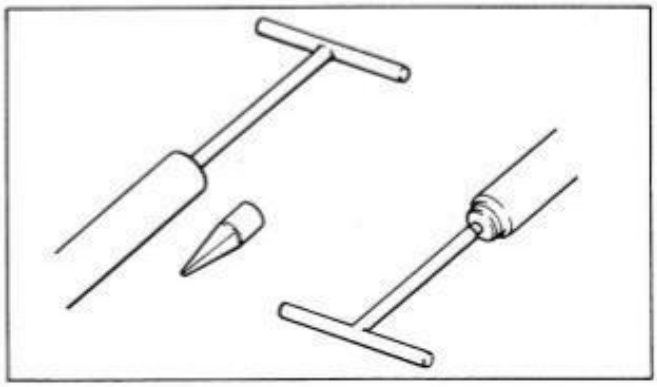

- Draw out damper rod and rebound spring.

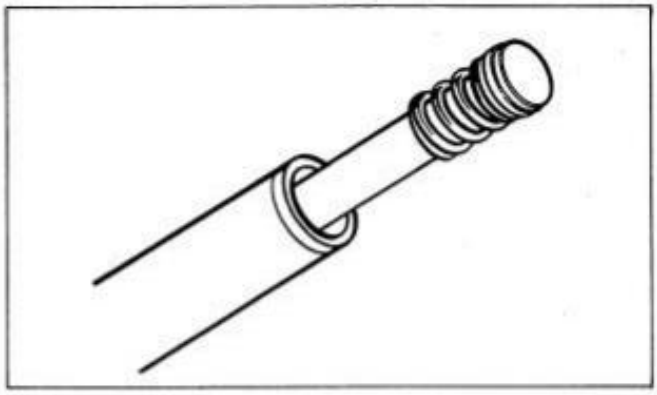

- While holding the caliper mounting portion of the outer tube by vise, separate the inner tube from the outer tube as shown.

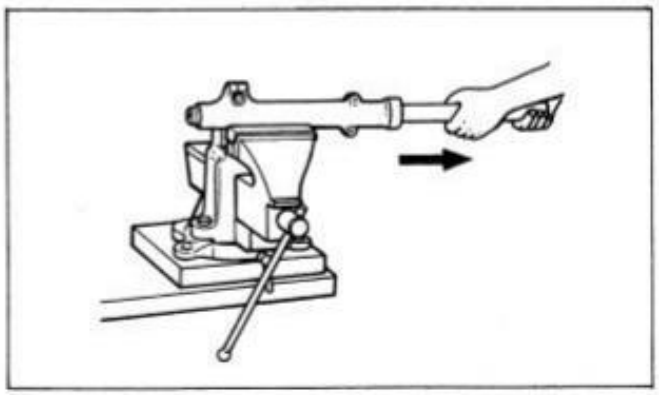

CAUTION:
The outer tube and inner tube "anti-friction" metals must be replaced along with the oil seal any time the fork is disassembled.

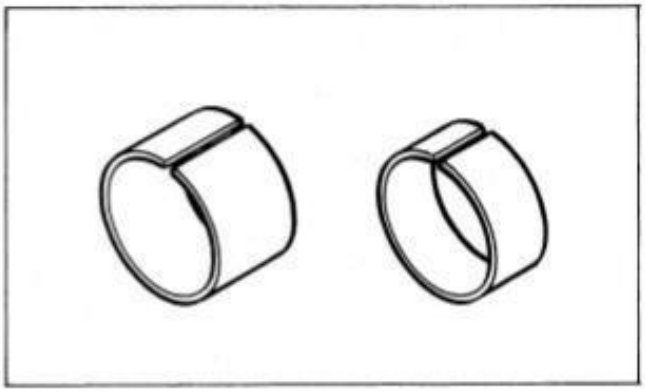

INSPECTION

DAMPER ROD RING

- Inspect damper rod ring for wear and damage.

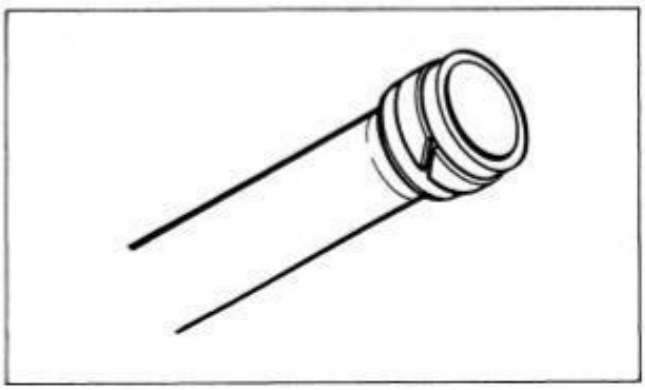

FORK SPRING

- Measure the fork spring free length. If it is shorter than service limit, replace it.

Service Limit	528 mm (20.8 in)

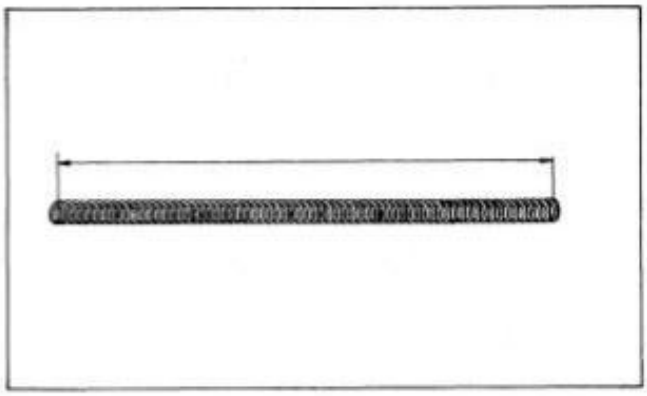

INNER TUBE

- Inspect inner tube outer surface for any scuffing.

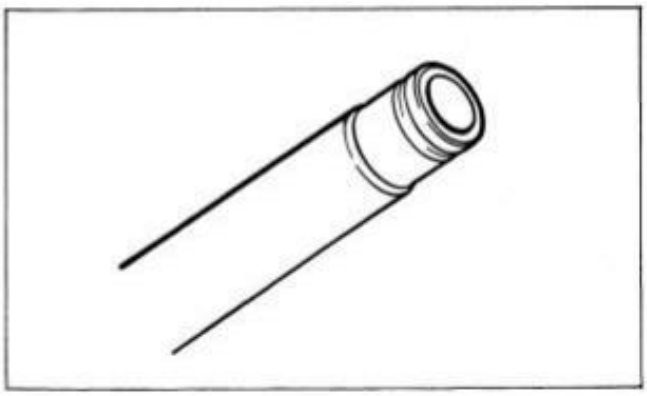

OUTER TUBE

- Inspect outer tube inner surface for any scuffing.

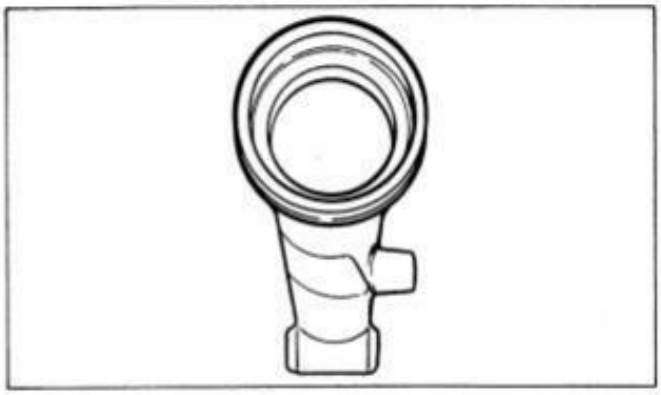

REASSEMBLY

Reassemble and remount the front fork in the reverse order of disassembly and removal, and also carry out the following steps:

INNER TUBE METAL

- Install the metal by hand as shown.

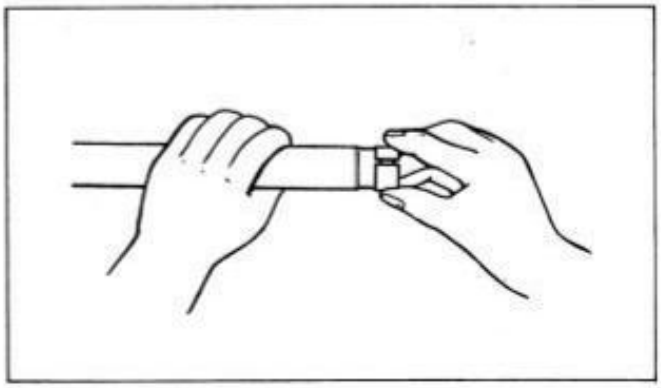

CAUTION:
Use special care to prevent damage to the Teflon coated surface of the Anti-friction metal when mounting it.

DAMPER ROD BOLT

- Apply Suzuki Bond No. 1207B and Thread Lock Cement to the damper rod bolt and tighten with specified torque.

99104-31140	Suzuki Bond No. 1207B
99000-32040	Thread Lock Cement

09940-34520	"T" handle
09940-34561	Attachment "D"
09914-25811	"T" type hexagon wrench

Tightening torque	1.5 – 2.5 kg-m (11.0 – 18.0 lb-ft)

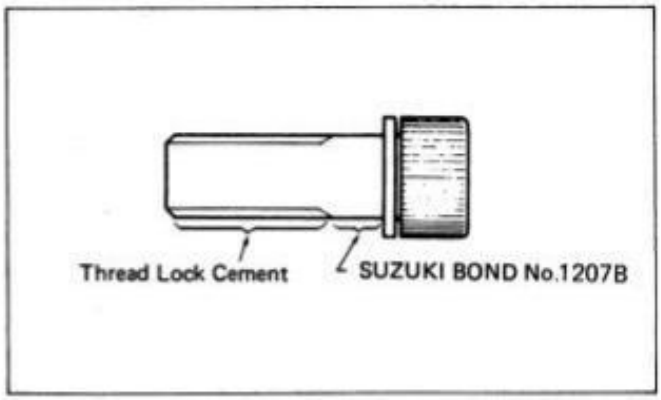

OUTER TUBE METAL, SPACER AND OIL SEAL

- Install outer tube metal, spacer and oil seal by using special tool as shown.

CAUTION:
Use special care to prevent damage to the Teflon coated surface of the anti-friction metals when mounting it.

09940-50111	Front fork oil seal installer

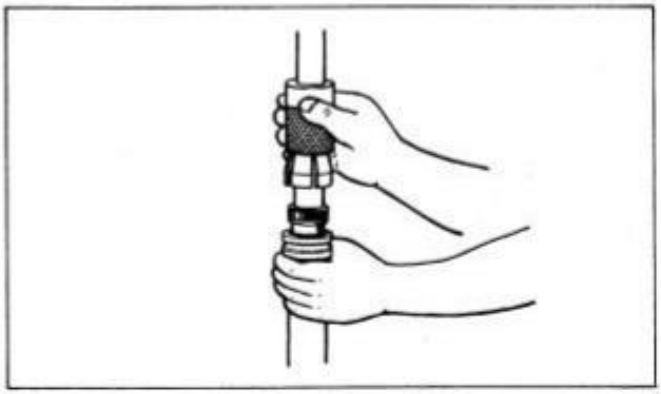

FORK OIL

- For the fork oil, be sure to use a motor oil whose viscocity rating meets specifications below.

Fork oil	Fork oil #15
Capacity	239 ml (8.08 US oz)

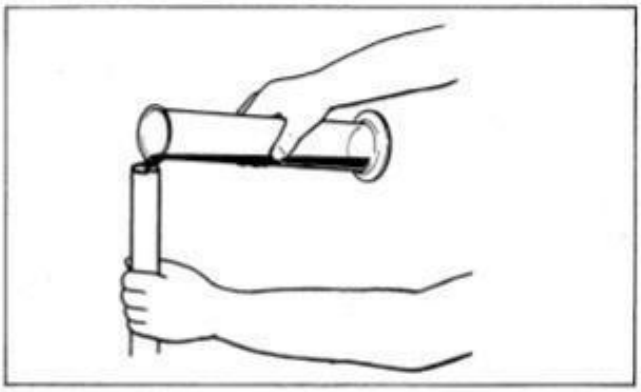

- Hold the front fork vertical and adjust the fork oil level with a special tool.

NOTE:
When adjusting oil level, remove the fork springs and compress the inner tube fully.

09943-74111	Fork oil level gauge
Oil level	144 mm (5.7 in)

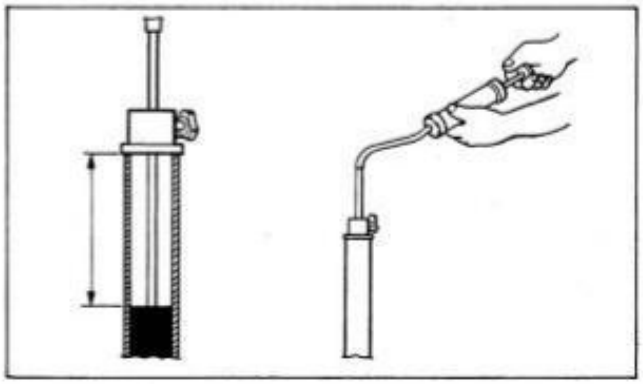

FORK SPRING

- The smaller end of the fork spring is positioned in the lower part of the fork leg.

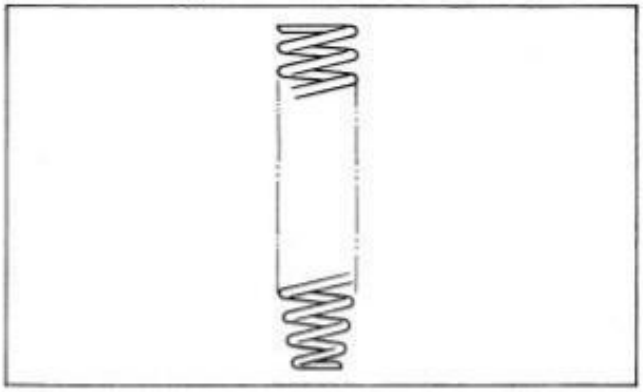

- To install a new stopper ring, it will be necessary to push the spring seat inward.

CAUTION:
- **Always use a new stopper ring.**
- **After installing a stopper ring, always insure that it is completely seated in its groove and securely fitted.**

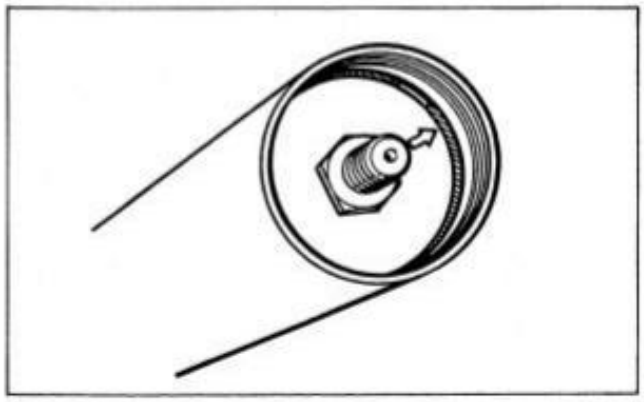

INNER TUBE

- Install the front fork assembly, align the top ① of inner tube to the upper surface ② of the steering stem upper bracket.

- Tighten the upper and lower clamp bolts.

Tightening-torque	Upper	3.5 – 5.5 kg-m (25.5–40.0 lb-ft)
	Lower	1.5 – 2.5 kg-m (11.0–18.0 lb-ft)

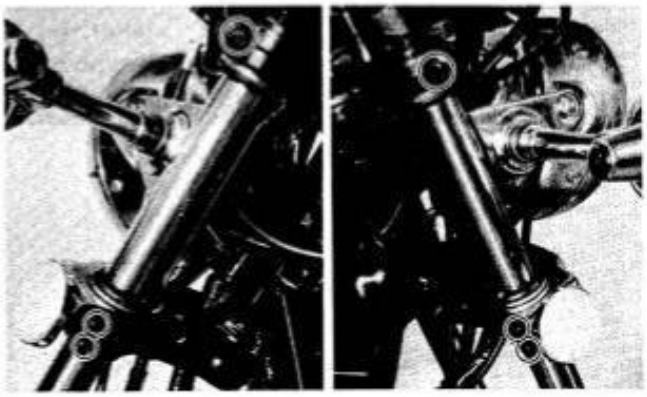

FORK AIR

- Lift up the front wheel by jack.
- Remove the handlebars.
- Connect the air pressure gauge to the valve ③, and turn the valve handle ④ clockwise. Connect the hand pump to the valve ⑤, turn the valve handle ⑥ clockwise, and pump the air. Let the air out by loosening the handle ⑥ till the specified air pressure is left inside. Loosen the valve handle ④, and remove the air pressure gauge.

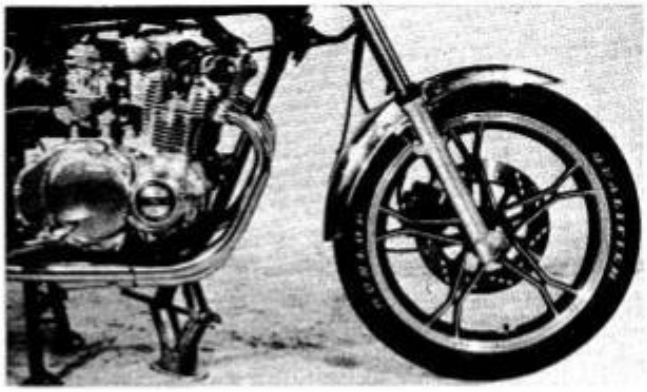

CAUTION:
During the air filling procedure do not exceed more than 2.50 kg/cm² (36 psi). Equalize the air pressure of both right and left forks. The maximum allowable difference is 0.1 kg/cm² (1.4 psi).

STD Air pressure	0.5 kg/cm² (7.11 psi)

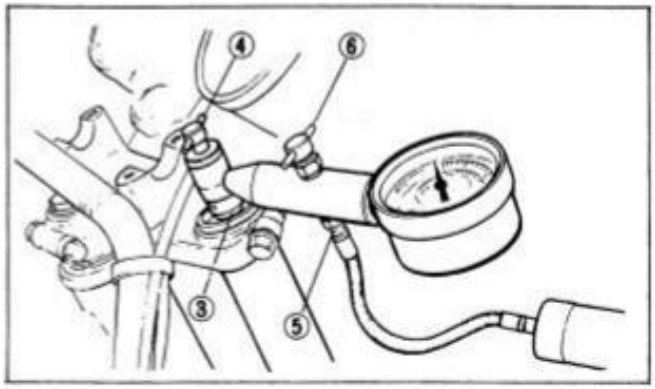

- Position the handlebars assembly into the lower handlebars clamp. Place the top handlebars clamps into position and secure them with four clamp bolts. Align the dot mark ① on the lower surface of the handlebars with the mating surface of the right side clamp.

Tightening torque	1.2 – 2.0 kg-m (8.5 – 14.5 lb-ft)

CAUTION:
Make sure that each handlebar clamp is positioned squarely with the clearances equalized between the front and the back.

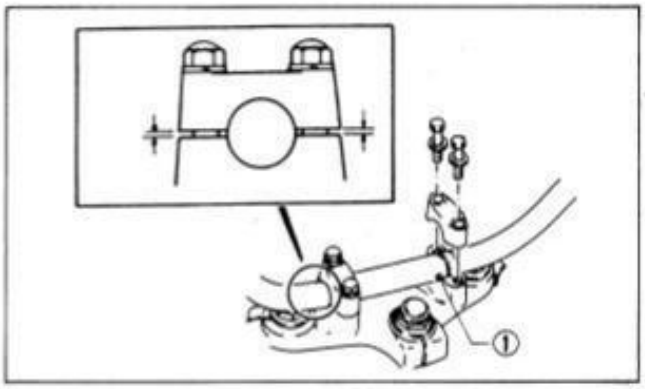

FRONT MASTER CYLINDER

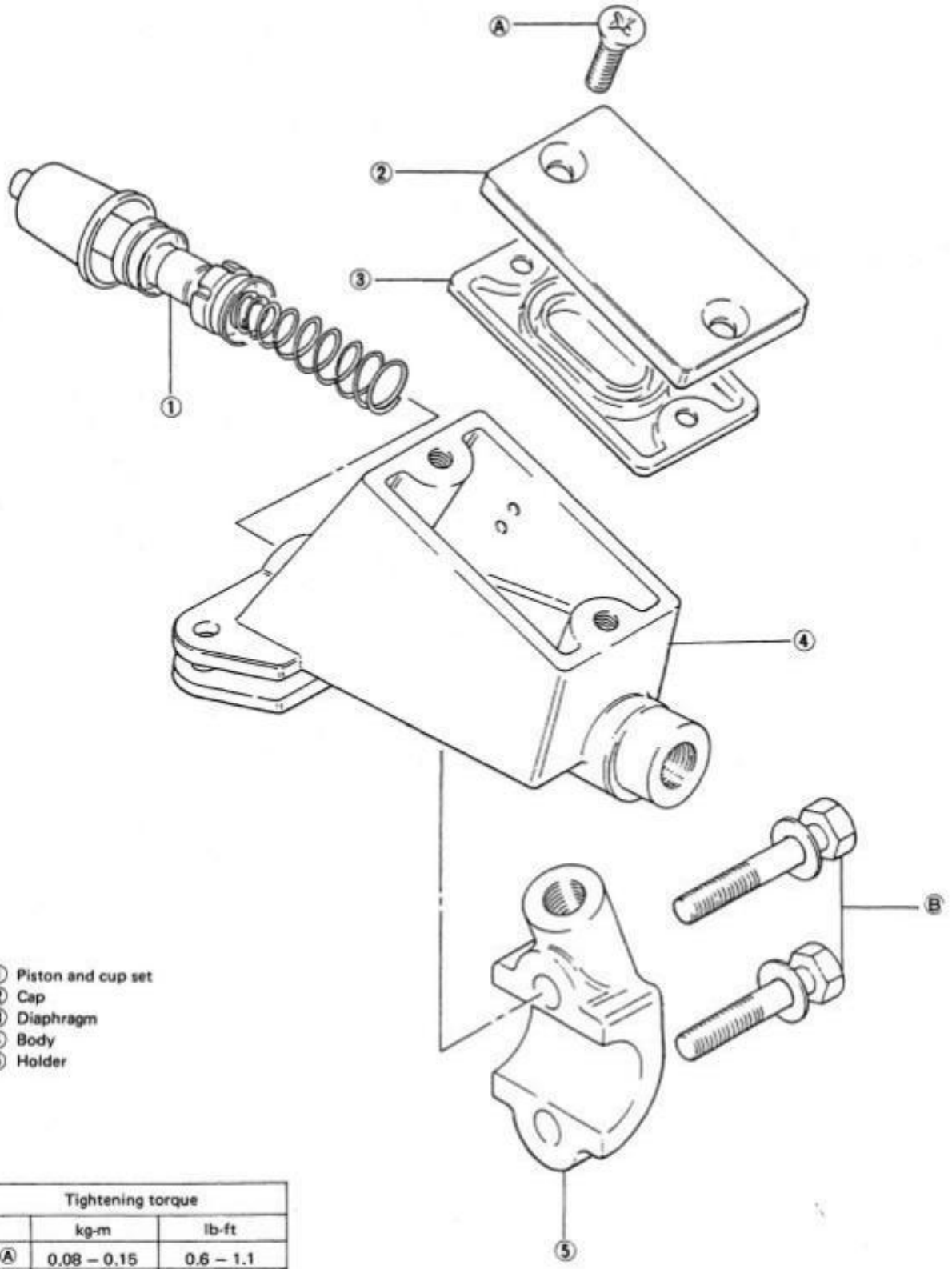

① Piston and cup set
② Cap
③ Diaphragm
④ Body
⑤ Holder

Tightening torque		
	kg-m	lb-ft
Ⓐ	0.08 – 0.15	0.6 – 1.1
Ⓑ	0.5 – 0.8	3.5 – 6.0

- Remove the front brake light switch and front brake lever.

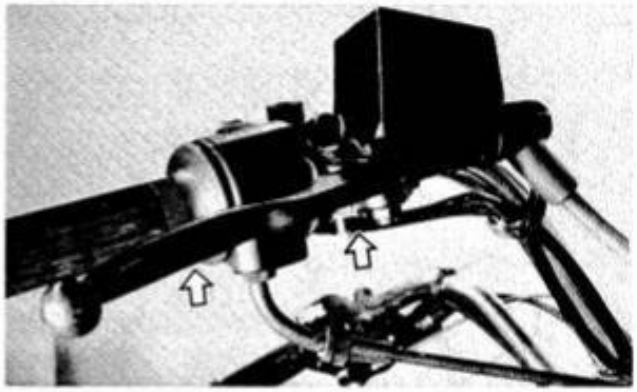

- Place a cloth underneath the union bolt on the master cylinder to catch spilled drops of brake fluid. Unscrew the union bolt and disconnect the brake hose/master cylinder joint.

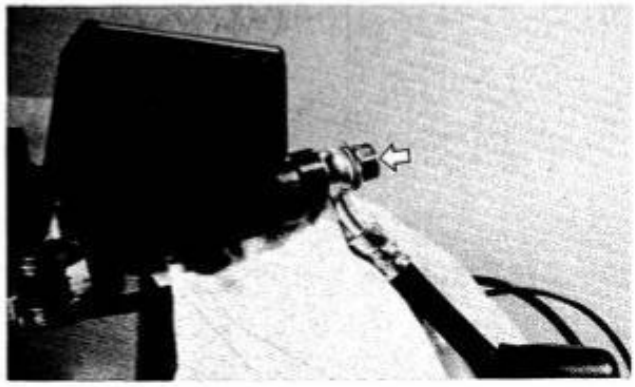

CAUTION:
Immediately and completely wipe off any brake fluid contacting any part of the motorcycle. The fluid reacts chemically with paint, plastics, rubber, materials, etc. and will damage them severely.

- Remove two clamp bolts and take off master cylinder.

- Remove two fitting screws, and remove the cap and diaphragm.
- Drain brake fluid.

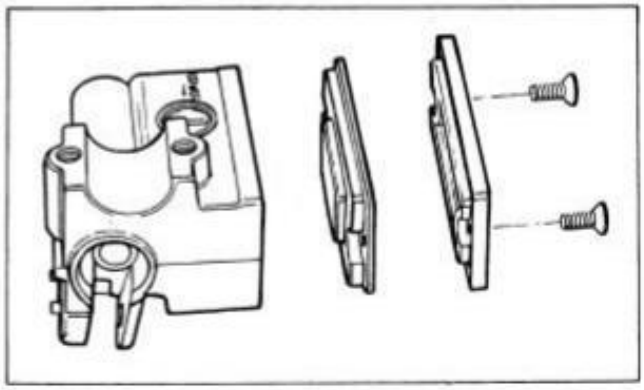

- Remove the dust seal boot.
- Remove the circlip by using special tool.

09900-06108	Snap ring pliers

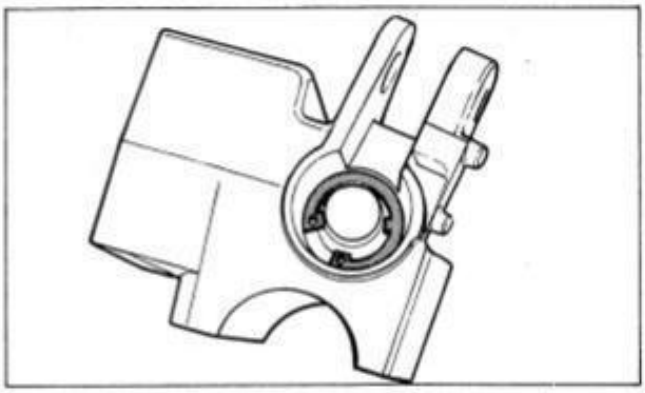

- Remove the piston, primary cup and spring.

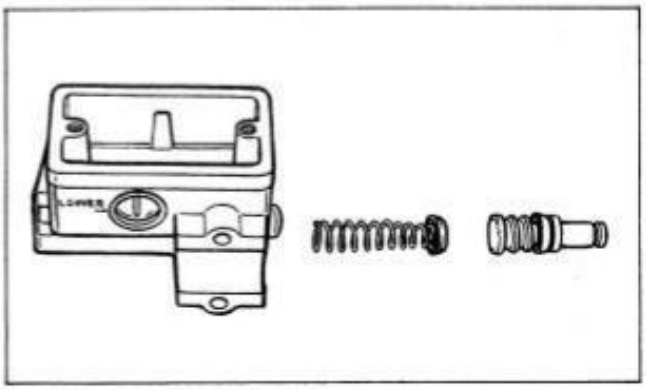

MASTER CYLINDER INSPECTION

- Inspect the master cylinder bore for any scratches or other damage.

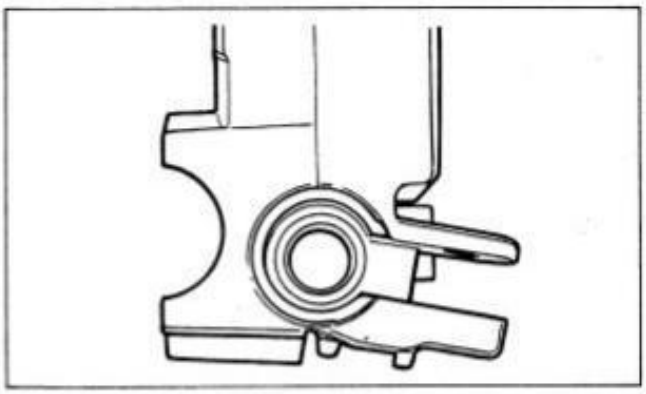

- Inspect the piston surface for scratches or other damage.

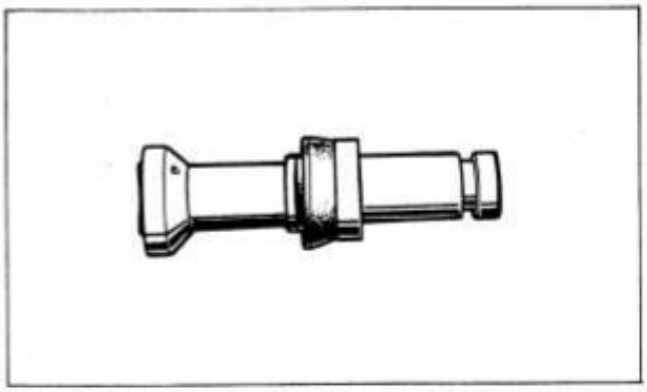

- Inspect the primary cup, secondary cup, and dust seal boot for wear or damage.

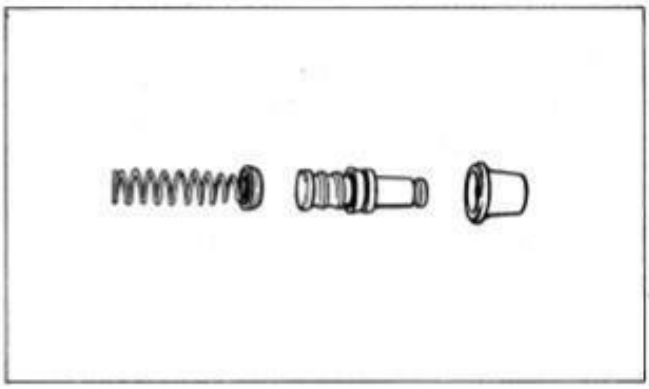

MASTER CYLINDER REASSEMBLY

Reassemble the master cylinder in the reverse orders of disassembly and by taking the following steps.

CAUTION:
Wash the master cylinder components with fresh brake fluid before reassembly. Never use cleaning solvent or gasoline to wash them. Apply brake fluid to the cylinder bore and all internal parts to be inserted into the bore.

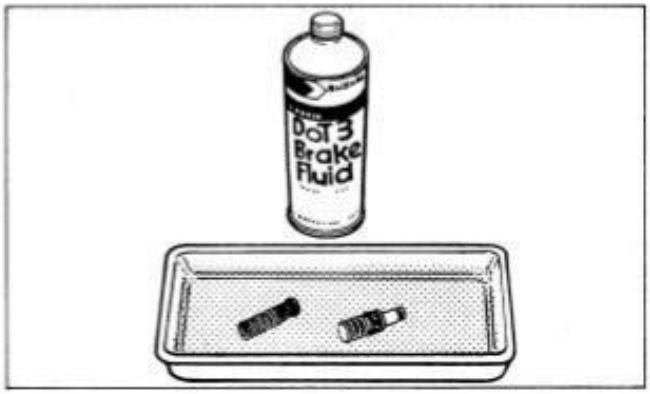

- When remounting the master cylinder on the handlebars, secure the clamp so that the clearances Ⓐ of both upside and downside of the handlebars stay equally.

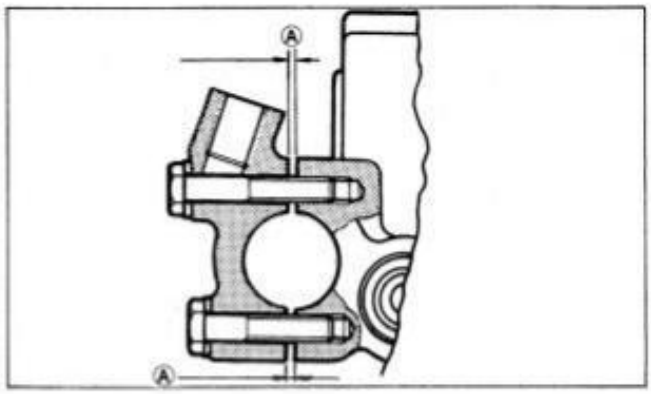

CAUTION:
Bleed the air after reassembling master cylinder.
Adjust the front brake light switch after installation.

REAR BRAKE

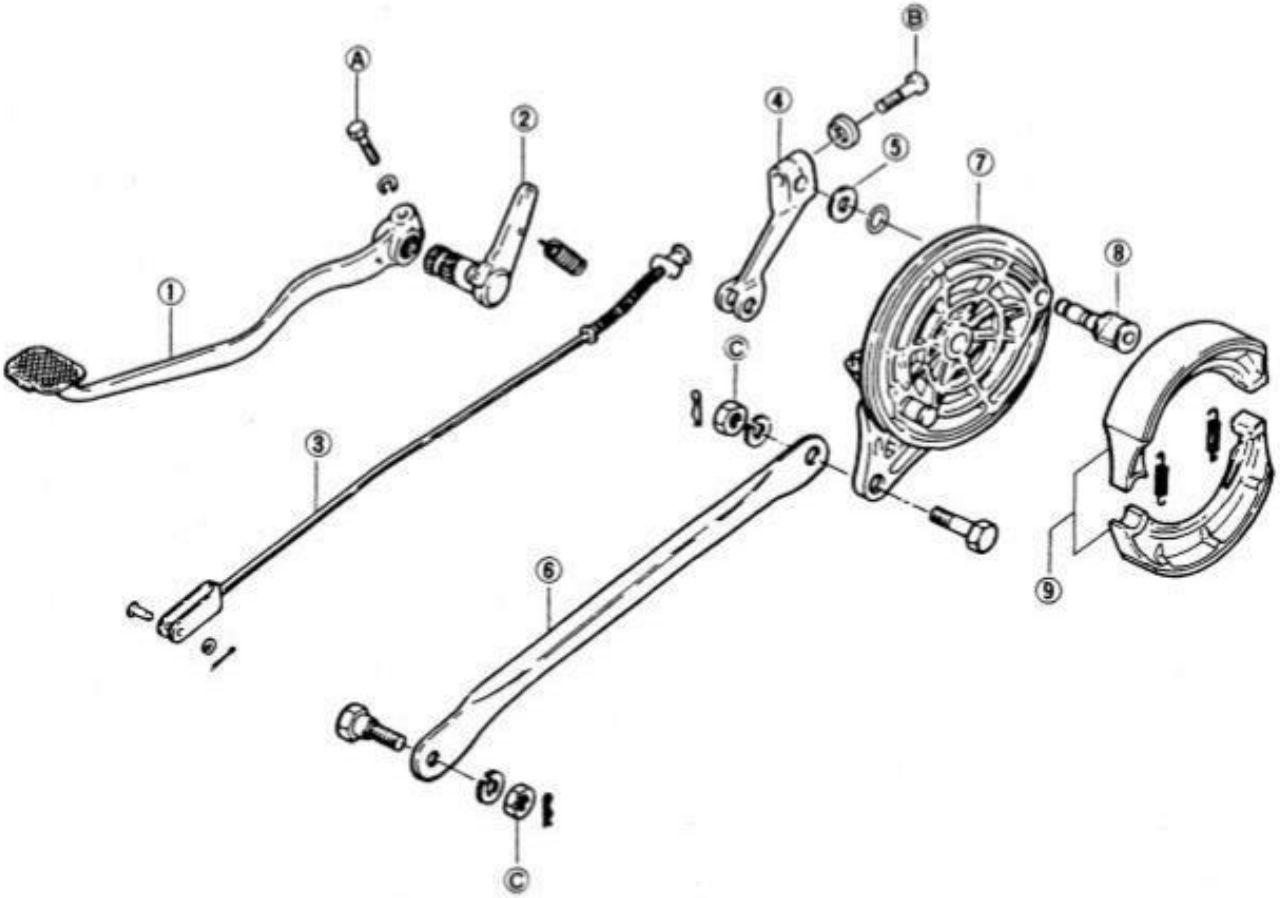

① Brake pedal
② Brake pedal rod arm
③ Brake rod Ass'y
④ Brake cam lever
⑤ O ring
⑥ Torque link
⑦ Brake panel
⑧ Brake cam
⑨ Brake shoe

Tightening torque		
	kg-m	lb-ft
Ⓐ	1.0 – 1.5	7.0 – 11.0
Ⓑ	0.5 – 0.8	3.5 – 6.0
Ⓒ	2.0 – 3.0	14.5 – 21.5

INSPECTION

BRAKE DRUM

Measure the brake drum I.D. to determine the extent of wear and, if the limit is exceeded by the wear noted, replace the drum. The value of this limit is indlcated inside the drum.

Service limit	180.7 mm (7.11 in)

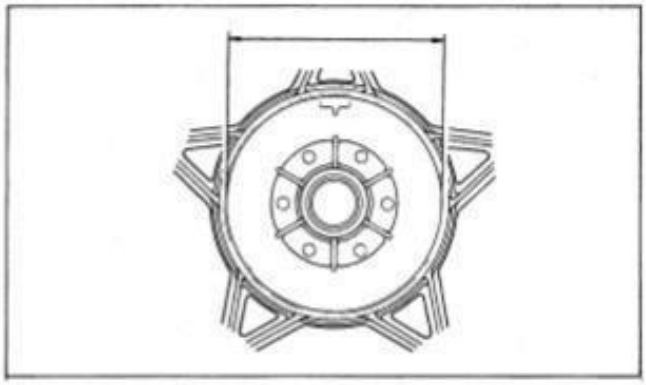

BRAKE SHOE

Check the brake shoe and decide whether it should be replaced or not from the thickness of the brake shoe lining.

Service Limit	1.5 mm (0.06 in)

NOTE:
Replace the brake shoe with a set, otherwise braking performance will be adversely affected.

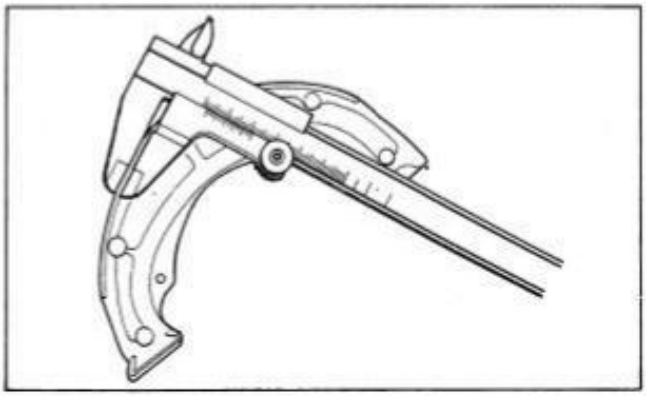

REMOUNTING

Apply a small amount of grease to the brake cam.

99000-25010	Suzuki Super Grease "A"

CAUTION:
Be careful not to apply too much grease to the brake cam shafts. If grease gets on the linings, brake slippage will result.

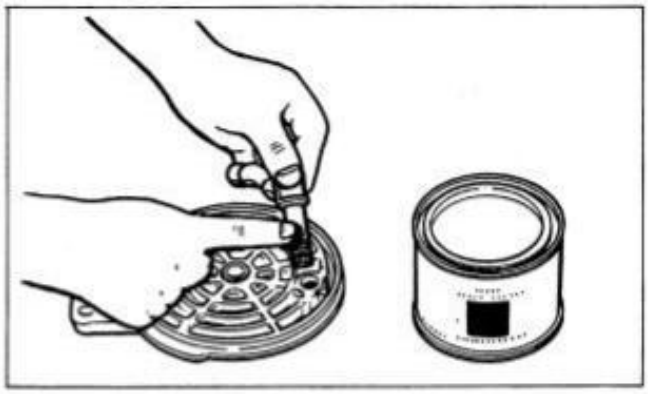

When installing the rear brake pedal, align the brake pedal groove with punched mark ① provided on the end face of brake pedal shaft.

CAUTION:
Adjust the drive chain slack, chain alignment and rear brake pedal free travel after remounting.

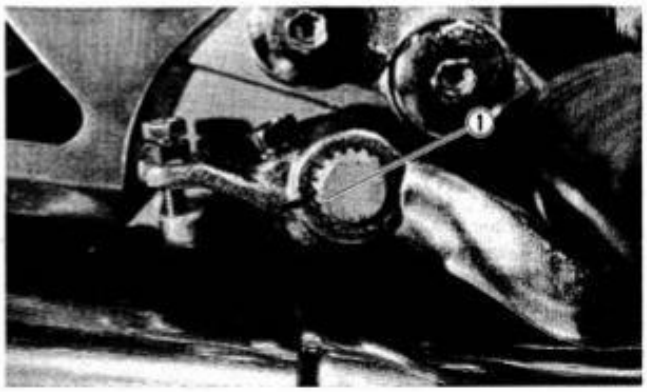

WIRE AND CABLE ROUTING

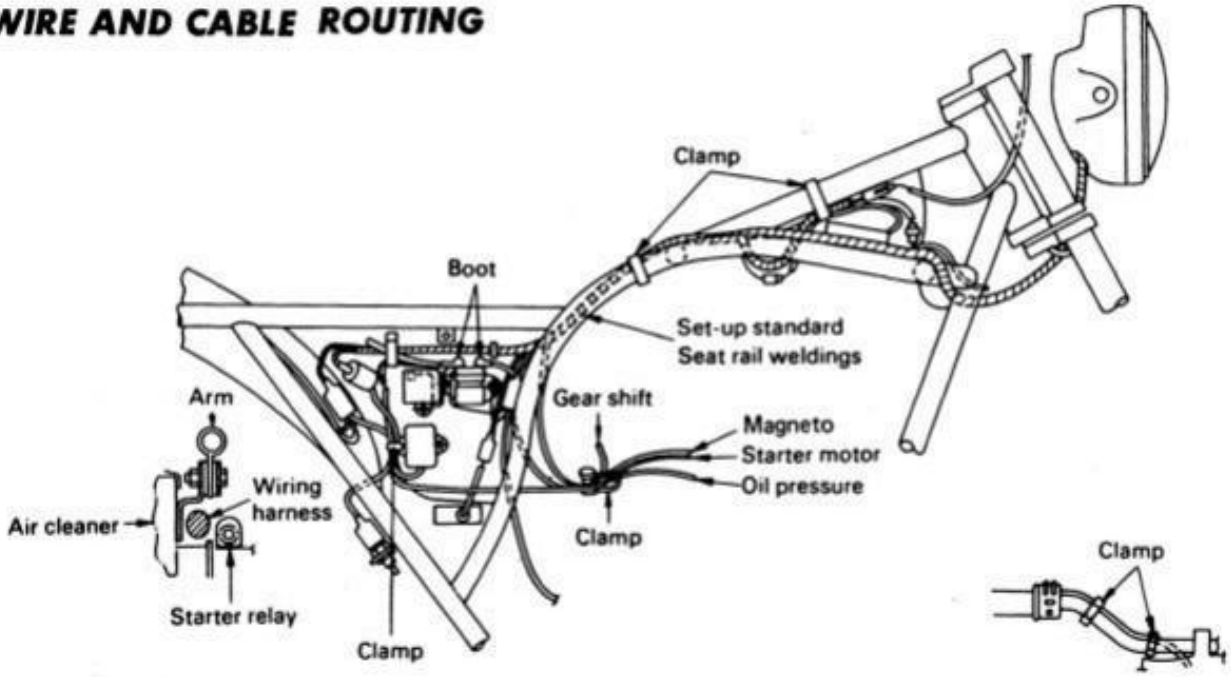

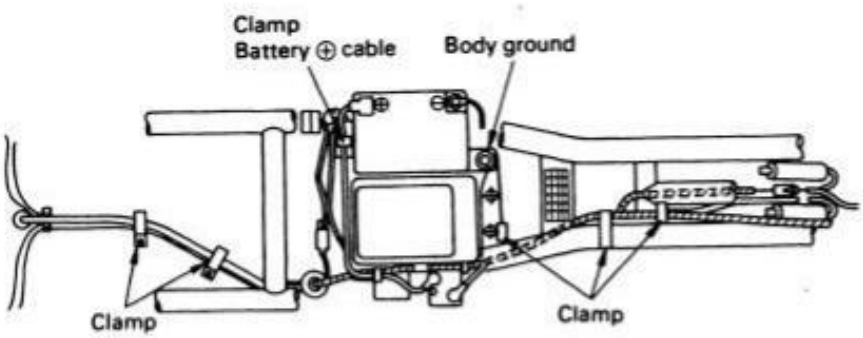

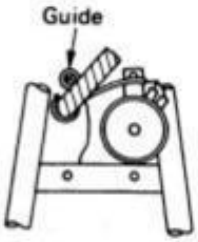

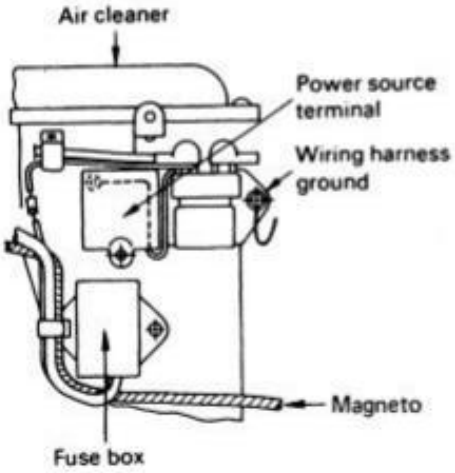

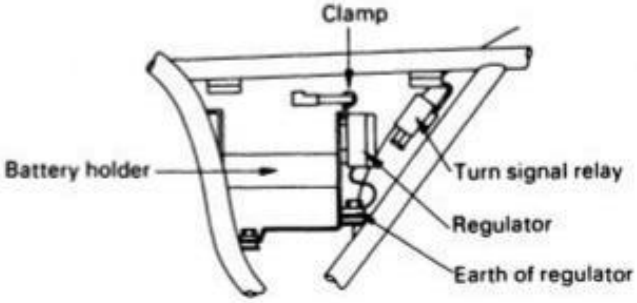

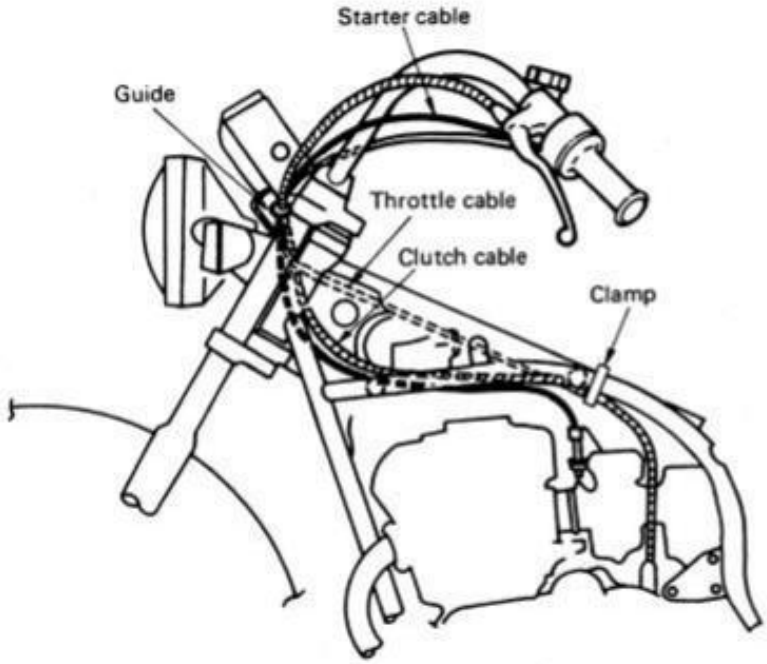
Starter cable
Guide
Throttle cable
Clutch cable
Clamp

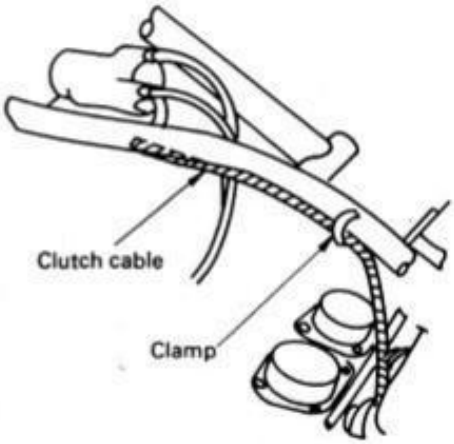
Clutch cable
Clamp

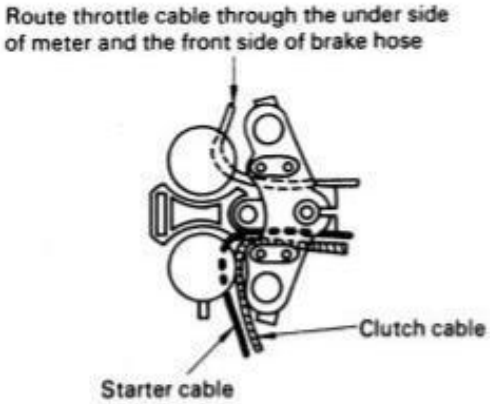
Route throttle cable through the under side of meter and the front side of brake hose
Clutch cable
Starter cable

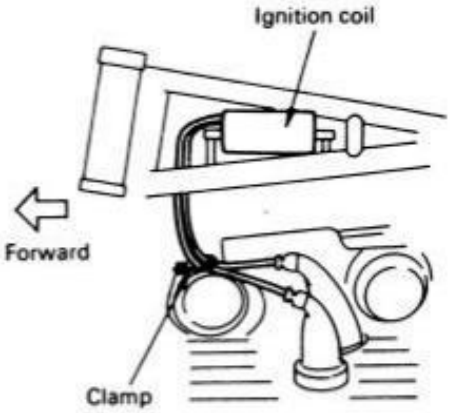
Ignition coil
Forward
Clamp

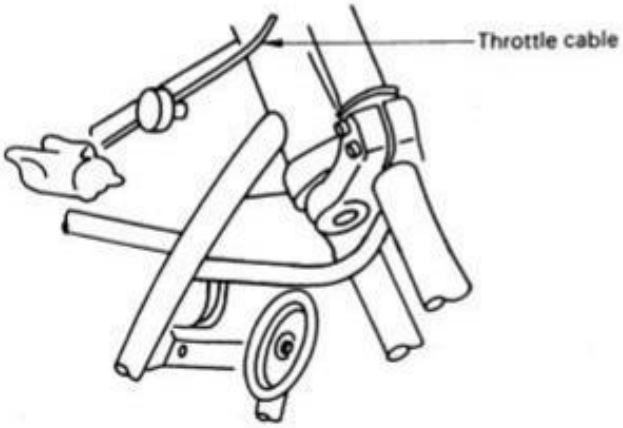
Throttle cable

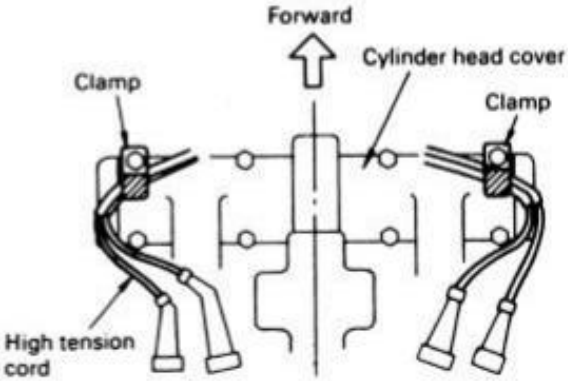
Forward
Cylinder head cover
Clamp
Clamp
High tension cord

WIRING DIAGRAM

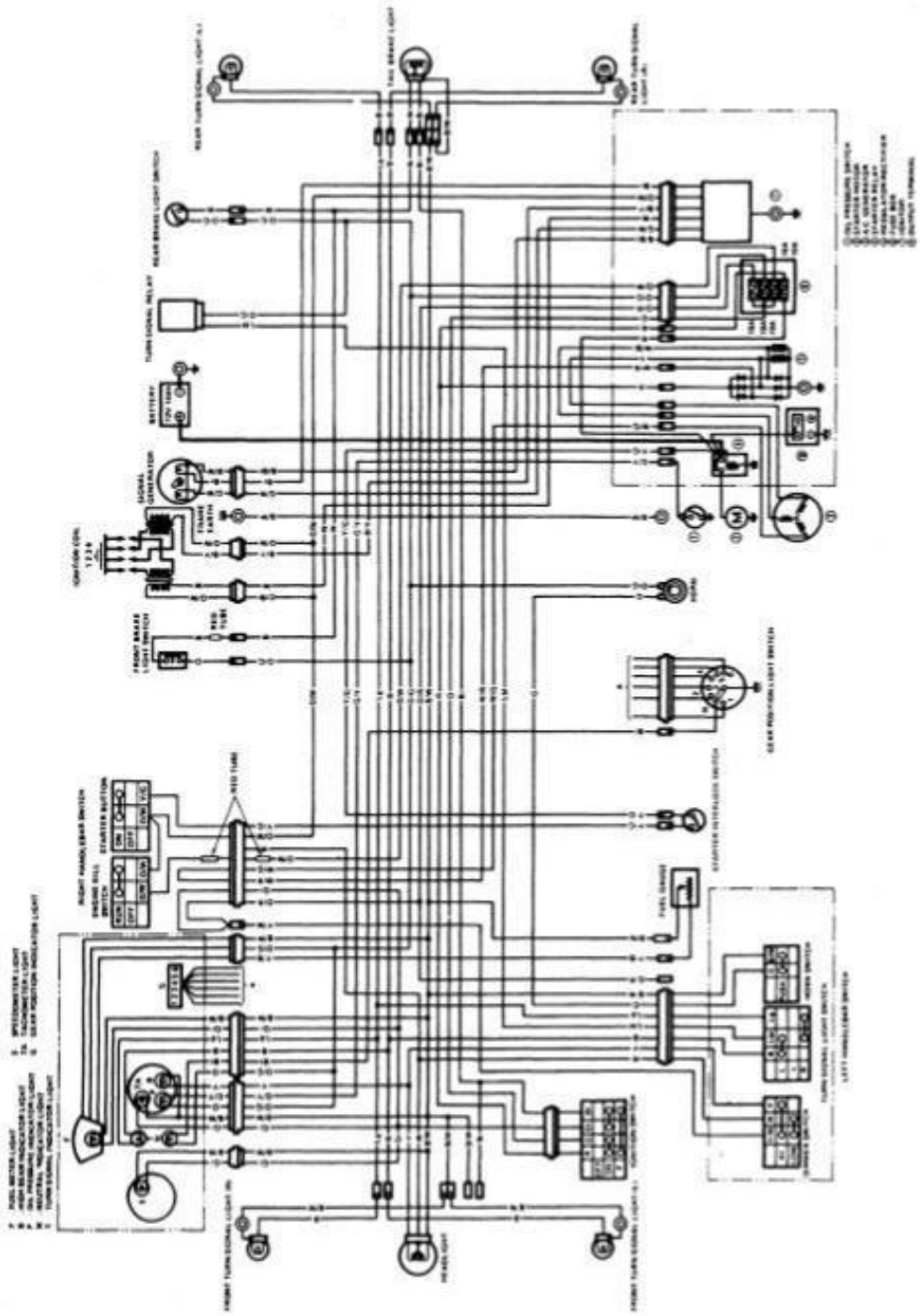

WIRE COLOR

B.....Black
Bl.....Blue
Br.....Brown
G.....Green
Gr.....Gray
Lbl.....Light blue
Lg.....Light green
O.....Orange
R.....Red
W.....White
Y.....Yellow
B/Bl.....Black with Blue tracer
B/W.....Black with White tracer
B/Y.....Black with Yellow tracer
G/W.....Green with White tracer
G/Y.....Green with Yellow tracer
O/G.....Orange with Green tracer
O/R.....Orange with Red tracer
O/W.....Orange with White tracer
W/Bl.....White with Blue tracer
W/G.....White with Green tracer
W/R.....White with Red tracer
Y/B.....Yellow with Black tracer
Y/G.....Yellow with Green tracer
Y/R.....Yellow with Red tracer

FOREWORD

This supplementary section has been produced to aid Suzuki mechanics in properly maintaining and repairing the 1982 "Z" model.
This supplementary section has been written primarily for the experienced Suzuki mechanic but will also be very useful even for the apprentice mechanic and do-it-yourself mechanic. The entire manual should be thoroughly reviewed before any servicing is performed.

Please also refer to the sections of 1 through 18 of this Service Manual for all other areas of information not covered in this section.

NOTE:
All service data, service specifications and tightening torque table differing with those that apply to the "X" model are clearly indicated with an asterisk (*).

VIEW OF SUZUKI GS550LZ

Right Side

Left Side

CONTENTS

SPECIFICATIONS 646
SERVICE DATA 648
TORQUE TABLE 658
SPECIAL MATERIALS 661
PERIODIC MAINTENANCE 663
COVER TIGHTENING BOLT 665
STARTER LEVER 665
FUEL GAUGE 666
FRONT FORK (Only for Canada) 668
FRONT MASTER CYLINDER 677
REAR BRAKE 681
WIRE AND CABLE ROUTING 683
WIRING DIAGRAM 685

SPECIFICATIONS

DIMENSIONS AND DRY MASS

Overall length	2 185 mm
	*2 205 mm . . . E-28
Overall width	870 mm
Overall height	1 200 mm
	1 180 mm . . . E-28
Wheelbase	1 455 mm
	*1 450 mm . . . E-28
Ground clearance	160 mm
	140 mm . . . E-28
Seat height	800 mm
	775 mm . . . E-28
Dry mass	202 kg
	*199 kg . . . E-28

ENGINE

Type	Four-stroke, air-cooled, DOHC
Number of cylinders	4
Bore	56.0 mm
Stroke	55.8 mm
Piston displacement	549 cm^3
Compression ratio	8.6 : 1
Carburetor	MIKUNI BS32SS, four
Air cleaner	Polyurethane foam element
Starter system	Electric
Lubrication system	Wet sump

TRANSMISSION

Clutch		Wet multi-plate type
Transmission		6-speed constant mesh
Gearshift pattern		1-down 5-up
Primary reduction		1.977 (87/44)
Final reduction		3.400 (51/15)
		3.266 (49/15) . . . E-28
Gear ratios,	Low	2.666 (32/12)
	2nd	1.777 (32/18)
	3rd	1.380 (29/21)
	4th	1.173 (27/23)
	5th	1.045 (23/22)
	Top	0.956 (22/23)
Drive chain		DAIDO D.I.D.50HDL or TAKASAGO RK50SHO 110 links
		DAIDO D.I.D.50HDL or TAKASAGO RK50SHO 108 links . . . E-28

* Asterisk indicates new Z model specifications.

CHASSIS

Front suspension	Telescopic, oil dampened *Telescopic, pneumatic/coil spring, oil dampened ... E-28
Rear suspension	Swinging arm, oil dampened, spring 5-way adjustable
Steering angle	40° (right and left)
Caster	61°00′ 60°00′ ... E-28
Trail	122 mm 112 mm ... E-28
Turning radius	2.5 m
Front brake	Disc brake, twin Disc brake ... E-28
Rear brake	*Internal expanding
Front tire size	3.25H19 4PR 90/90-19 52H ... E-28
Rear tire size	4.50H17 4PR 130/90-16 67H ... E-28
Front tire pressure	200 kPa (2.00 kg/cm², 28 psi) (Normal solo riding)
Rear tire pressure	200 kPa (2.00 kg/cm², 28 psi) (Normal solo riding)

ELECTRICAL

Ignition type	Transistorized
Ignition timing	15° B.T.D.C. below 1 500 r/min and 40° B.T.D.C. above 2 350 r/min
Spark plug	NGK B8ES or NIPPON DENSO W24ES-U NGK BR8ES or NIPPON DENSO W24ESR ... E-06
Spark plug gap	0.6 – 0.8 mm both NGK and NIPPON DENSO NIPPON DENSO
Battery	12V 43.2 kC (12Ah)/10HR
Generator	Three-phase A.C. generator
Fuse	10/10/10/10/15A

CAPACITIES

Fuel tank including reserve		12 L
	reserve	4.0 L
Engine oil	change	2.4 L
	filter change	2.6 L
	overhaul	2.7 L
Front fork oil		196 ml in each leg *239 ml in each leg ... E-28

* Asterisk indicates new Z model specifications.
E-06 ... For South Africa
E-28 ... For Canada

NOTE:
Specifications subject to change without notice.

SERVICE DATA

VALVES + GUIDES

Unit: mm

ITEM	STANDARD		LIMIT
Valve Diam.	IN.	32.0	—
	EX.	27.0	—
Valve lift	IN.	7.2	—
	EX.	7.0	—
Valve clearance or Tappet clearance (when cold)	IN. & EX.	0.03 – 0.08	—
Valve guide to Valve stem clearance	IN.	0.025 – 0.050	0.35
	EX.	0.030 – 0.060	0.35
Valve guide I.D.	IN. & EX.	7.000 – 7.015	—
Valve stem O.D.	IN.	6.965 – 6.980	—
	EX.	6.955 – 6.970	—
Valve stem runout	IN. & EX.	—	0.05
Valve head thickness	IN. & EX.	—	0.5
Valve stem end length	IN. & EX.	—	4.0
Valve seat width	IN. & EX.	0.9 – 1.1	—
Valve head radial runout	IN. & EX.	—	0.03
Valve spring free length (IN. & EX.)	INNER	—	33.9
	OUTER	—	41.3
Valve spring tension (IN. & EX.)	INNER	8.9 – 12.5 kg at length 31 mm	—
	OUTER	22.1 – 27.1 kg at length 35 mm	—

CAMSHAFT + CYLINDERHEAD

Unit: mm

ITEM	STANDARD		LIMIT
Cam height	IN.	35.485 – 35.515	35.190
	EX.	35.285 – 35.315	34.990
Camshaft journal oil clearance	IN. & EX.	0.020 – 0.054	0.150
Camshaft journal holder I.D.	IN. & EX.	22.000 – 22.013	——
Camshaft journal O.D.	IN. & EX.	21.959 – 21.980	——
Camshaft runout	IN. & EX.	——	0.10
Cam chain 20 pitch length		——	157.8
Cam chain pin (at arrow "3")		20th Pin	——
Cylinder head distortion		——	0.2

CYLINDER + PISTON + PISTON RING

Unit: mm

ITEM	STANDARD			LIMIT
Compression pressure	900 – 1 300 kPa (9.0 – 13.0 kg/cm²)			700 kPa (7.0 kg/cm²)
Compression pressure difference	———			200 kPa (2.0 kg/cm²)
Piston to Cylinder clearance	0.045 – 0.055			0.120
Cylinder bore	56.000 – 56.015			56.085
Piston Diam.	55.950 – 55.965 Measure the 15 from piston skirt end.			55.880
Cylinder distortion	———			0.26
Piston ring free end gap	1st	N&T	Approx. 6.5	5.2
	2nd	N&T	Approx. 6.5	5.2
Piston ring end gap	1st		0.10 – 0.30	0.70
	2nd		0.10 – 0.30	0.70
Piston ring groove clearance	1st		———	0.180
	2nd		———	0.150
Piston ring groove width	1st		1.21 – 1.23	——
	2nd		1.21 – 1.23	——
	Oil		2.51 – 2.53	——
Piston ring thickness	1st		1.175 – 1.190	——
	2nd		1.170 – 1.190	——
Piston pin bore I.D.	16.002 – 16.008			16.030
Piston pin O.D.	15.995 – 16.000			15.980

CONROD + CRANKSHAFT

Unit: mm

ITEM	STANDARD	LIMIT
Conrod small end I.D.	16.006 – 16.014	16.040
Conrod deflection	———	3.0
Conrod big end side clearance	0.10 – 0.65	1.0
Crankshaft runout	———	0.10

OIL PUMP

ITEM	STANDARD	LIMIT
Oil pump reduction ratio	1.821 (87/44 x 35/38)	——
Oil pressure (at 60°C, 140°F)	Above 10kPa (0.1 kg/cm²) Below 50 kPa (0.5 kg/cm²) at 3 000 r/min.	——

CLUTCH

Unit: mm

ITEM	STANDARD	LIMIT
Clutch cable play	2 – 3	——
Clutch release screw	1/4 – 1/2 turn back	——
Drive plate thickness	2.9 – 3.1	2.6
Drive plate claw width	11.8 – 12.0	11.0
Driven plate thickness	1.6 ± 0.06	——
Driven plate distortion	———	0.1
Clutch spring free length	———	36.5

TRANSMISSION

Unit: mm

ITEM	STANDARD		LIMIT
Primary reduction	1.977 (87/44)		—
Final reduction	3.400 (51/15)		—
	3.266 (49/15)...(For E-28)		—
Gear ratios	Low	2.666 (32/12)	—
	2nd	1.777 (32/18)	—
	3rd	1.380 (29/21)	—
	4th	1.173 (27/23)	—
	5th	1.045 (23/22)	—
	Top	0.956 (22/23)	—
Shift fork to Groove clearance	0.1 – 0.3		0.5
Shift fork groove width	5.5 – 5.6		—
Shift fork thickness	5.3 – 5.4		—
Drive chain	Type	D.I.D.: 50HDL TAKASAGO: RK50SHO	—
	Links	110	—
		108 (For E-28)	
	20 pitch length	—	320.0
Drive chain slack	20 – 30		—

CARBURETOR

ITEM		SPECIFICATION
Carburetor type		MIKUNI BS32SS
Bore size		32
I.D. No.		* 47170
Idle r/min.		1 100 ± 100 r/min.
Fuel level		5.0 ± 0.5
Float height		22.4 ± 1.0
Main jet	(M.J.)	# 92.5
Main air jet	(M.A.J.)	1.6
Jet needle	(J.N.)	5F42-3
Needle jet	(N.J.)	X–6
Pilot jet	(P.J.)	# 40
By pass	(B.P.)	1.0, 0.8, 0.8
Pilot outlet	(P.O.)	0.7
Valve seat	(V.S.)	2.0
Starter jet	(G.S.)	# 35
Pilot screw	(P.S.)	PRE-SET
Pilot air jet	(P.A.J.)	# 120
Throttle cable play		0.5 – 1.0

* Asterisk indicates new Z model specification.

ELECTRICAL

Unit: mm

ITEM	SPECIFICATION	
Ignition timing	15° B.T.D.C. Below 1 500 ± 100 r/min. and 40° B.T.D.C. Above 2 350 ± 100 r/min.	
Firing order	1 · 2 · 4 · 3	
Spark plug	Type	NGK: B8ES N.D.: W24ES-U
		NGK: BR8ES N.D.: W24ESR (For E-06)
	Gap	0.6 – 0.8
Spark performance	Over 8 at 1 atm.	
Signal coil resistance	Approx.	G/W–B/W 60 – 80Ω
Ignition coil resistance	Primary	O/W–W or B/Y Approx. 3 – 5Ω
	Secondary	Plug cap – Plug cap Approx. 30 – 35 kΩ
Generator No-Load voltage	More than 80 V (AC) at 5 000 r/min.	
Regulated voltage	14.0 – 15.5 V at 5 000 r/min.	
Starter motor	Brush length	Limit: 6
	Commutator under cut	Limit: 0.2
Starter relay resistance	3 – 4 Ω	
Battery	Type designation	YB10L – A2
	Capacity	12V 43.2kC (12Ah)/10HR
	Standard electrolyte S.G.	1.28 at 20°C (68°F)
Fuse size	Main	15A
	Headlight	10A
	Turn signal	10A
	Ignition	10A
	Output terminal	10A

BRAKE + WHEEL

Unit: mm

ITEM		STANDARD	LIMIT
* Rear brake pedal free travel		20 – 30	—
Rear brake pedal height		20	—
* Brake drum I.D.	Rear	—	180.7
* Brake lining thickness	Rear	—	1.5
Brake disc thickness	Front	5.0 ± 0.2	4.5
		6.0 ± 0.2 (For E-28)	5.5
Brake disc runout	Front	—	0.30
Master cylinder bore	Front	15.870 – 15.913	—
		14.000 – 14.043 (For E-28)	—
Master cylinder piston diam.	Front	15.827 – 15.854	—
		13.941 – 13.968 (For E-28)	—
Brake caliper cylinder bore	Front	38.180 – 38.256	—
		42.860 – 42.899 (For E-28)	—
Brake caliper piston diam.	Front	38.098 – 38.148	—
		42.785 – 42.810 (For E-28)	—
Wheel rim runout	Axial	—	2.0
	Radial	—	2.0
Wheel axle runout	Front	—	0.25
	Rear	—	0.25
Tire size	Front	3.25H19 4PR	—
		90/90-19 52H (For E-28)	—
	Rear	4.50H17 4PR	—
		130/90-16 67H (For E-28)	—
Tire tread depth	Front	—	1.6
	Rear	—	2.0

* Asterisk indicates new Z model specifications.

SUSPENSION

Unit: mm

ITEM	STANDARD	LIMIT
Front fork stroke	160	——
Front fork spring free length	——	528
Front fork oil level	220	——
	* 144 (For E-28)	
* Front fork air pressure S.T.D.	50 kPa (0.5 kg/cm²) (For E-28)	——
Rear wheel travel	95	——
Swinging arm pivot shaft runout	——	0.3

FUEL + OIL + CAPACITY

ITEM	SPECIFICATION	
Fuel type	Gasoline used should be graded 85–95 octane or higher. An unleaded or low-read gasoline type is recommended.	
Fuel tank including reserve	12 L	
reserve	4.0 L	
Engine oil type	SAE 10W/40	
Engine oil capacity	Change	2 400 ml
	Filter change	2 600 ml
	Overhaul	2 700 ml
Front fork oil type	Fork oil # 15	
Front fork oil capacity (each leg)	196 ml	
	* 239 ml (For E-28)	
Brake fluid type	DOT3, DOT4 or SAE J1703	

* Asterisk indicates new Z model specifications.

TIRE PRESSURE

COLD INFLATION TIRE PRESSURE	NORMAL RIDING				CONTINUOUS HIGH SPEED RIDING			
	SOLO RIDING		DUAL RIDING		SOLO RIDING		DUAL RIDING	
	kPa	kg/cm²	kPa	kg/cm²	kPa	kg/cm²	kPa	kg/cm²
FRONT	175	1.75	175	1.75	200	2.00	200	2.00
REAR	200	2.00	225	2.25	225	2.25	280	2.80

COLD INFLATION TIRE PRESSURE	NORMAL RIDING				CONTINUOUS HIGH SPEED RIDING			
	SOLO RIDING		DUAL RIDING		SOLO RIDING		DUAL RIDING	
	kPa	kg/cm²	kPa	kg/cm²	kPa	kg/cm²	kPa	kg/cm²
FRONT	200	2.00	225	2.25	200	2.00	250	2.50
REAR	200	2.00	225	2.25	225	2.25	280	2.80

For E-28

WATTAGE

Unit: W

ITEM		SPECIFICATION	
		E-01, 06, 24, 28	E-02, 04, 17, 21, 22, 25, 26, 34, 39
Headlight	HI	60	
	LO	55	
Parking or City light			4
Tail/Brake light		8/23	5/21
Turn signal light		23	21
Speedometer light		3.4	
Tachometer light		3.4	
Fuel gauge light		*1.7	
Turn signal indicator light		3.4	
High beam indicator light		3.4	
Neutral indicator light		3.4	
Oil pressure indicator light		3.4	
Gear position indicator light		1.4	

NOTE:

E-01: General markets
E-02: England
E-04: France
E-06: South Africa
E-17: Sweden
E-21: Belgium
E-22: West Germany
E-24: Australia
E-25: The Netherlands
E-26: Denmark
E-28: Canada
E-34: Italy
E-39: Austria

* Asterisk indicates new Z model specifications.

TORQUE TABLE

ENGINE

ITEM	N·m	kg·m
Cylinder head cover bolt	7 – 11	0.7 – 1.1
Cylinder head bolt	7 – 11	0.7 – 1.1
Cylinder head nut	23 – 27	2.3 – 2.7
Camshaft bearing cap bolt	8 – 12	0.8 – 1.2
Camshaft sprocket bolt	24 – 26	2.4 – 2.6
Cam chain tensioner lock nut	10 – 12	1.0 – 1.2
Generator rotor bolt	60 – 70	6.0 – 7.0
Advance governor bolt	18 – 23	1.8 – 2.3
Starter motor bolt	4 – 7	0.4 – 0.7
Starter clutch bolt	15 – 20	1.5 – 2.0
Clutch sleeve hub nut	40 – 60	4.0 – 6.0
Clutch spring bolt	6 – 10	0.6 – 1.0
Oil strainer screw	4 – 7	0.4 – 0.7
Gear shifting cam stopper spring holder bolt	18 – 28	1.8 – 2.8
Gear shift arm stopper bolt	15 – 23	1.5 – 2.3
Crankcase bolt (6 mm)	6 – 10	0.6 – 1.0
Crankcase bolt (8 mm)	18 – 22	1.8 – 2.2
Engine mounting nut (8 mm)	13 – 23	1.3 – 2.3
Engine mounting nut (10 mm)	25 – 45	2.5 – 4.5
Exhaust pipe bolt	9 – 14	0.9 – 1.4
Muffler bolt	18 – 28	1.8 – 2.8
Gear shift lever bolt	6 – 10	0.6 – 1.0
Engine sprocket nut	50 – 70	5.0 – 7.0

CHASSIS

ITEM	N·m	kg·m
Handlebar clamp bolt	12 – 20	1.2 – 2.0
Steering stem upper clamp bolt	15 – 25	1.5 – 2.5
Front fork upper bracket bolt (R, L)	35 – 55	3.5 – 5.5
Front fork lower bracket bolt (R, L)	15 – 25	1.5 – 2.5
Front fork damper rod bolt	15 – 25	1.5 – 2.5
* Steering stem head bolt	36 – 52	3.6 – 5.2
Front fork axle holder nut	15 – 25	1.5 – 2.5
Front axle shaft nut	36 – 52	3.6 – 5.2
Swinging arm pivot nut	50 – 80	5.0 – 8.0
Rear torque link nut	20 – 30	2.0 – 3.0
Rear axle nut	50 – 80	5.0 – 8.0
Rear shock absorber nut	20 – 30	2.0 – 3.0
Footrest bolt	27 – 43	2.7 – 4.3
Front brake caliper mounting bolt	20 – 40	2.0 – 4.0
Front brake disc plate bolt	15 – 25	1.5 – 2.5
Front brake caliper axle bolt	40 – 55	4.0 – 5.5
Front brake master cylinder mounting bolt	5 – 8	0.5 – 0.8
Front brake hose union bolt	13 – 18	1.3 – 1.8
Front brake air bleeder bolt	6 – 9	0.6 – 0.9
* Rear brake cam lever bolt	5 – 8	0.5 – 0.8

* Asterisk indicates new Z model specifications.

TIGHTENING TORQUE CHART

For other bolts and nuts not listed, refer to this chart:

Bolt Diameter	Conventional or "4" marked bolt		"7" marked bolt	
Ⓐ (mm)	N·m	kg·m	N·m	kg·m
4	1 – 2	0.1 – 0.2	1.5 – 3	0.15 – 0.3
5	2 – 4	0.2 – 0.4	3 – 6	0.3 – 0.6
6	4 – 7	0.4 – 0.7	8 – 12	0.8 – 1.2
8	10 – 16	1.0 – 1.6	18 – 28	1.8 – 2.8
10	22 – 35	2.2 – 3.5	40 – 60	4.0 – 6.0
12	35 – 55	3.5 – 5.5	70 – 100	7.0 – 10.0
14	50 – 80	5.0 – 8.0	110 – 160	11.0 – 16.0
16	80 – 130	8.0 – 13.0	170 – 250	17.0 – 25.0
18	130 – 190	13.0 – 19.0	200 – 280	20.0 – 28.0

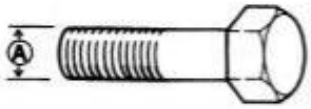

Conventional bolt

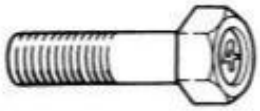

"4" Marked bolt

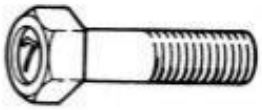

"7" Marked bolt

SPECIAL MATERIALS

The materials listed below are needed for maintenance work on the GS550L, and should be kept on hand for ready use. They supplement such standard materials as cleaning fluids, lubricants, emery cloth and the like. How to use them and where to use them are described in the text of this manual.

Material	Part
 99000-32040 THREAD LOCK CEMENT	* Carburetor bracket screw . . . . . 8 pcs. * Oil filter cap nut . . . . . 3 pcs. * Front fork damper rod bolt . . . . . 2 pcs. * Cam shaft end cap screw . . . . . 8 pcs.
 99000-32050 THREAD LOCK "1342"	* Generator lead wire guide screw . . . . . 3 pcs. * Generator stator securing screw . . . . . 3 pcs. * Gearshift cam stopper bolt . . . . . 2 pcs. * Countershaft bearing retainer . . . . . 4 pcs. * Starter motor securing bolt . . . . . 2 pcs. * Gearshift fork shaft stopper screw . . . . . 1 pc. * Engine oil pump set screw . . . . . 4 pcs.
 99000-32020 THREAD LOCK SUPER "1333B"	* Gearshift cam retainer screw . . . . . 1 pc. * Cam chain sprocket allen bolt . . . . . 2 pcs. * Cam chain guide bolt . . . . . 1 pc. * Starter clutch allen bolt . . . . . 3 pcs. * Gearshift stopper . . . . . 1 pc. * Muffler cover screw . . . . . 4 pcs.
 99000-32090 THREAD LOCK SUPER "1332B"	* Generator rotor securing bolt . . . . . 1 pc.
 99000-32030 THREAD LOCK SUPER "1303B"	* Camshaft sprocket bolt . . . . . 4 pcs.

Material	Part
 99000-25010 SUZUKI SUPER GREASE "A"	• Oil seals • Throttle grip • Cables (speedometer and tachometer) • Clutch release mechanism • Gearshift lever linkage and shaft • Speedometer gearbox • Wheel bearings • Swinging arm bearing and dust seal • Rear brake cam • Brake pedal shaft • Governor link • Centerstand spacer • Steering stem bearings
 99000-31110 SUZUKI BOND No. 1215	• Mating surfaces of upper and lower crankcase. • Front fork damper rod bolt.
 99000-25100 SUZUKI SILICONE GREASE	• Apply to caliper axle bolt
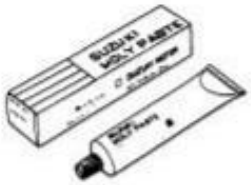 99000-25140 SUZUKI MOLY PASTE	• Valve stem • Cam shaft • Chain tensioner adjuster shaft

USE OF GENUINE SUZUKI PARTS

To replace any part of the machine, use a genuine SUZUKI replacement part. Imitation parts or parts supplied from any other source than SUZUKI, if used to replace SUZUKI parts can reduce the machine's performance and, even worse, could induce costly mechanical troubles.

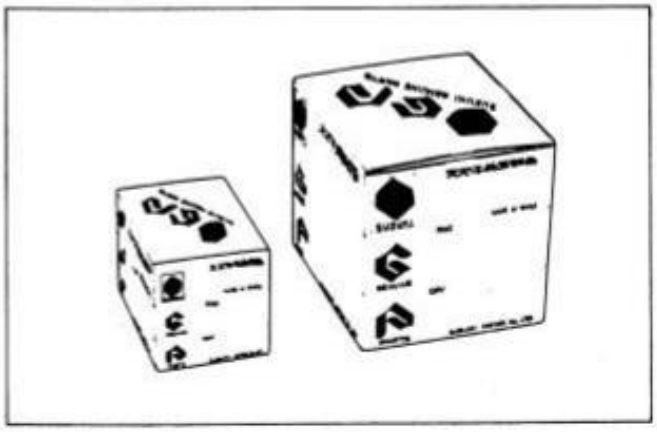

PERIODIC MAINTENANCE SCHEDULE

The chart below lists the recommended intervals for all the required periodic service work necessary to keep the motorcycle operating at peak performance and economy. Mileages are expressed in terms of kilometers.

NOTE:
More frequent servicing may be performed on motorcycles that are used under severe conditions.

PERIODIC MAINTENANCE CHART

ENGINE

Item \ Interval	Initial 1 000 km	Every 5 000 km	Every 10 000 km
Air cleaner	Clean every 3 000 km		
Battery	Inspect	Inspect	–
Engine bolts and nuts	Inspect	Inspect	–
Tappet clearance	Inspect	Inspect	–
Compression	Inspect	Inspect	–
Spark plug	Inspect	Inspect	Replace
Ignition timing	Inspect	Inspect	–
Carburetor	Inspect	Inspect	–
Fuel lines	Replace every 2 years		
Engine oil	Change	Change	–
Engine oil filter	Replace	Replace	–
Oil pressure	–	Inspect	–
Oil sump filter	–	–	Clean
Clutch	Inspect	Inspect	–

CHASSIS

Item \ Interval	Initial 1 000 km	Every 5 000 km	Every 10 000 km
Brakes	Inspect	Inspect	–
Brake hose	Replace every 2 years		
Brake fluid	Change every 1 year		
Tires	Inspect	Inspect	–
Steering	Inspect	Inspect	–
Front fork oil	Change	–	Change

LUBRICATION CHART

The maintenance schedule, which follows, is based on this philosophy. It is timed by odometer indication, and is calculated to achieve the ultimate goal of motorcycle maintenance in the most economical manner.

Item \ Interval	Initial and every 5 000 km	Every 10 000 km
Governor link	–	Grease
Throttle cable	Motor oil	–
Throttle grip	–	Grease
Clutch cable	Motor oil	–
Starter cable	Motor oil	–
Speedometer cable	–	Grease
Tachometer cable	–	Grease
Brake pedal	Grease or oil	–
Brake lever	–	Grease or oil
Clutch lever	–	Grease or oil
Steering stem bearings	Grease every 2 years or 20 000 km	
Swinging arm bearings		

Lubricate exposed parts which are subject to rust, with either motor oil or grease whenever the motorcycle has been operated under wet or rainy conditions.

Before lubricating each part, clean off any rusty spots and wipe off any grease, oil, dirt or grime.

COVER TIGHTENING BOLT

Cover tightening bolts has been changed from screw to bolt.

Clutch cover
Contact breaker cover
Generator cover
Engine sprocket cover
Starter motor cover

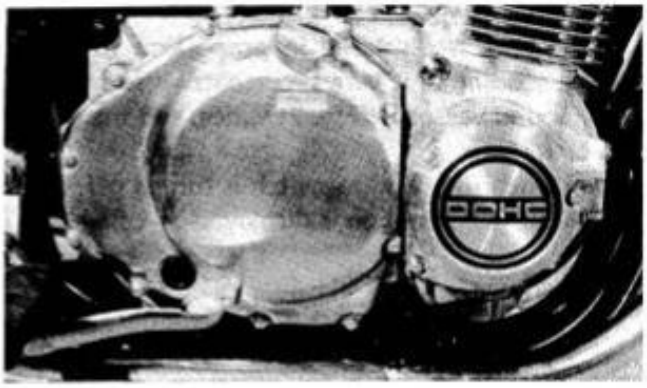

NOTE:
When unscrewing or tightening bolt use a special tool.

09900-06711	"T" type box wrench 7mm
09900-00302	"T" type box wrench 8mm

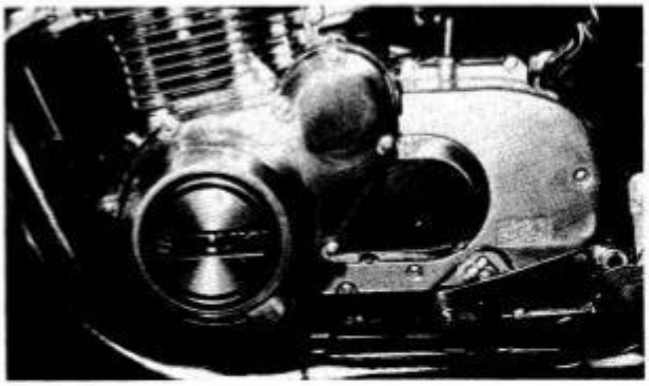

STARTER LEVER

- Remove the starter lever and starter cable.

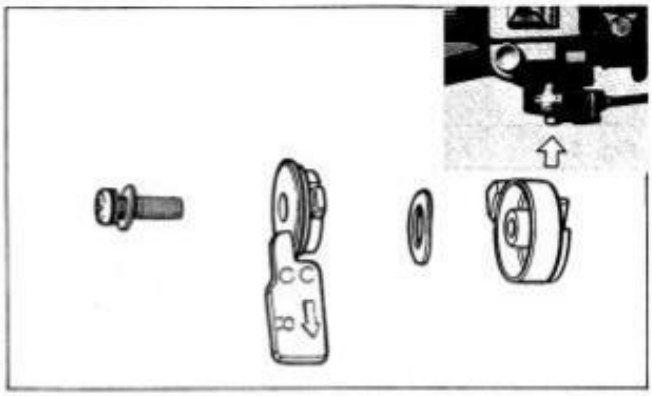

- Apply Suzuki Super Grease "A" to the washer before tighten the screw.

99000-25010	Suzuki Super Grease "A"

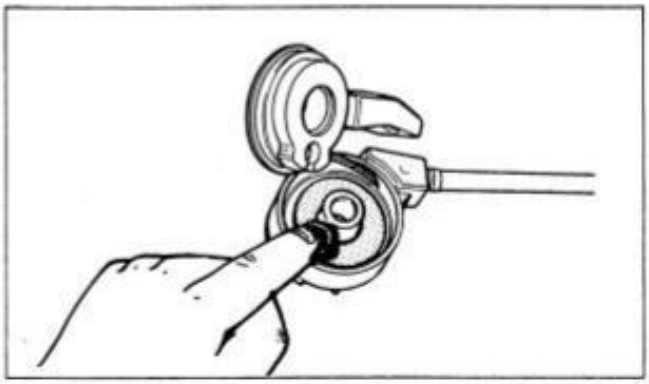

FUEL GAUGE

As shown in Fig. 1, coils n1, n2, n3 and n4 are set in the fuel gauge. When the ignition switch is ON, the float in the tank is displaced in proportion to the change in the amount of gasoline, the resistance of the fuel gauge sending unit varies, currents I_1 and I_2 vary, strength of the magnetic field generated by the coils vary, compound vector H (Fig. 2) varies, and the magnet of the flow meter rotates to deflect the pointer.

Even when the ignition switch is turned off, the pointer remains in the position where it was when the switch was ON. This function is displayed by using high-viscosity oil and a balanced magnet.

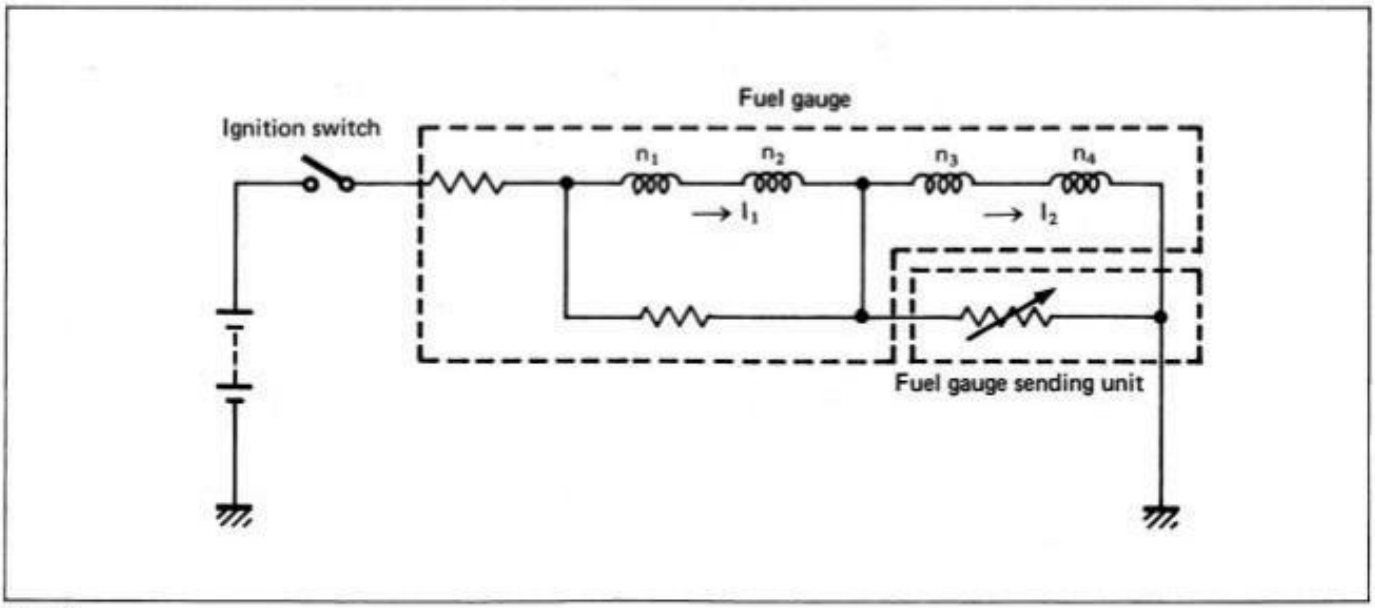

Fig. 1

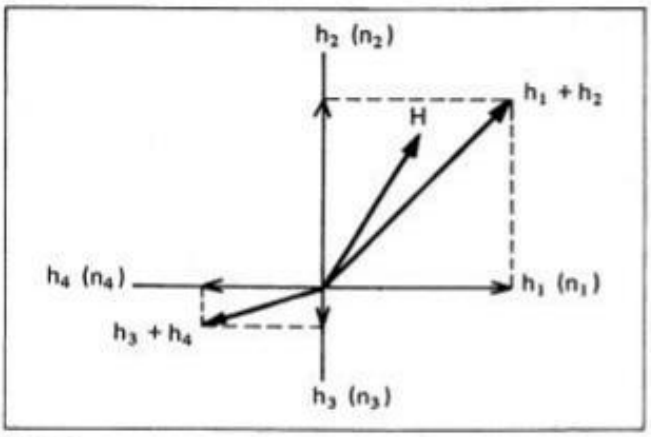

Fig. 2

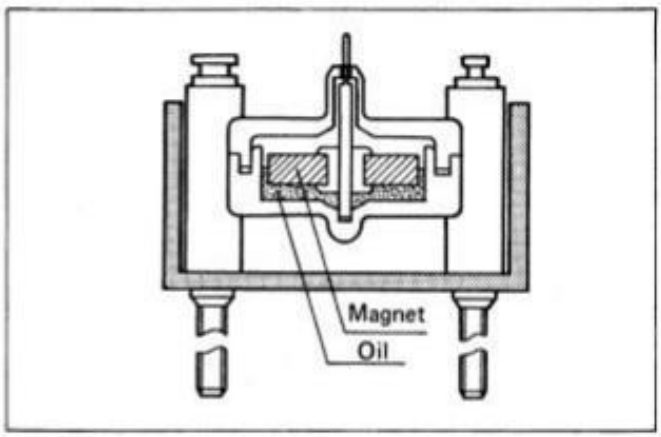

Fig. 3

INSPECTION

FUEL GAUGE

With the ignition switch turned on, remove two lead wires going into the fuel gauge sending unit, connect the lead wires on the main wiring harness side and check the fuel gauge. If "F" is indicated, the fuel meter is in good condition.

FUEL GAUGE SENDING UNIT

Remove the lead wires coming out of the fuel gauge sending unit and check resistance of each of them.

If the resistance measured is incorrect, replace the fuel gauge sending unit assembly with new one.

FULL	Approx. 2 – 7Ω
HALF (1/2)	Approx. 25 – 40Ω
EMPTY	Approx. 90 – 110Ω

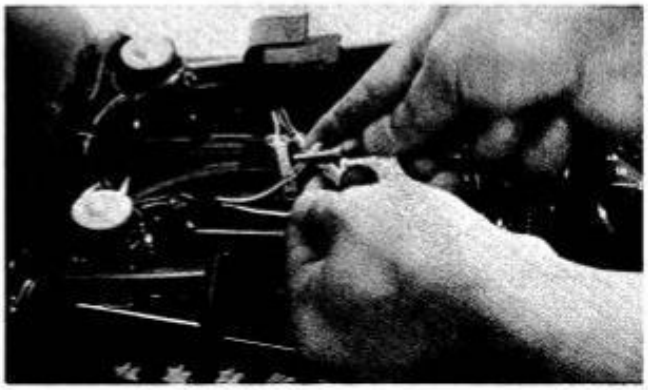

FRONT FORK (Only for Canada)

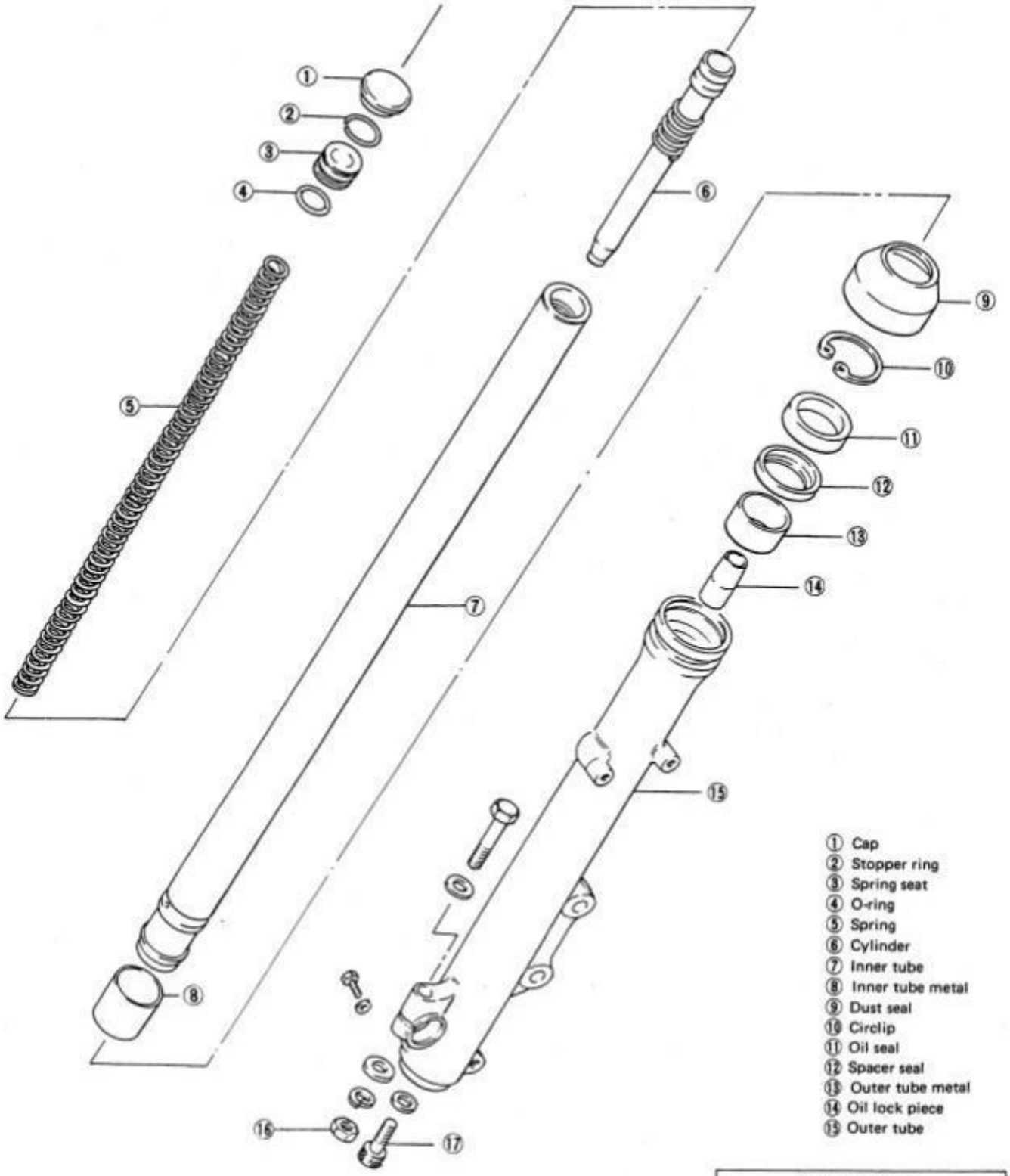

① Cap
② Stopper ring
③ Spring seat
④ O-ring
⑤ Spring
⑥ Cylinder
⑦ Inner tube
⑧ Inner tube metal
⑨ Dust seal
⑩ Circlip
⑪ Oil seal
⑫ Spacer seal
⑬ Outer tube metal
⑭ Oil lock piece
⑮ Outer tube

Tightening torque		
	kg-m	lb-ft
⑯	1.5 – 2.5	11.0 – 18.0
⑰	1.5 – 2.5	11.0 – 18.0

REMOVAL AND DISASSEMBLY

- Support the machine by the center stand and a jack.

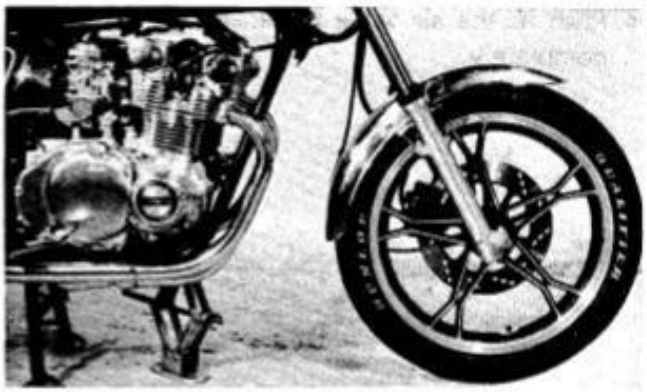

- Remove the front brake caliper and speedometer cable guide.

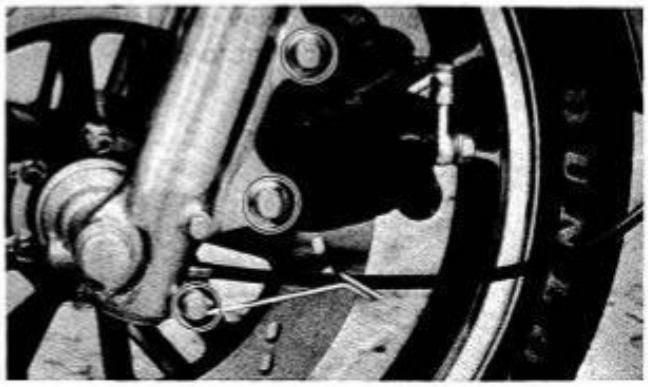

- Pull off the cotter pin ① and remove axle nut ② and drow out the axle shaft.
- Remove the front wheel.

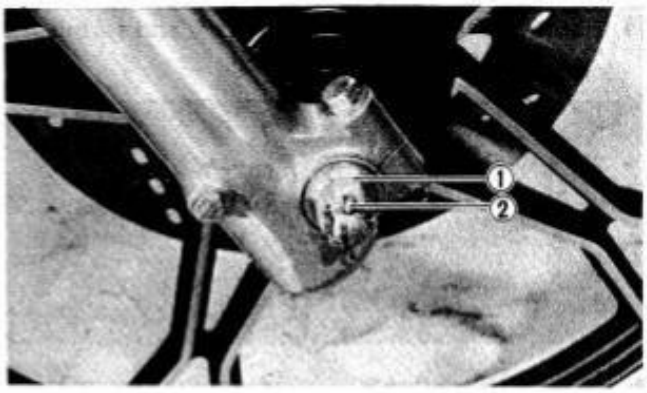

- Remove four bolts and front fender.

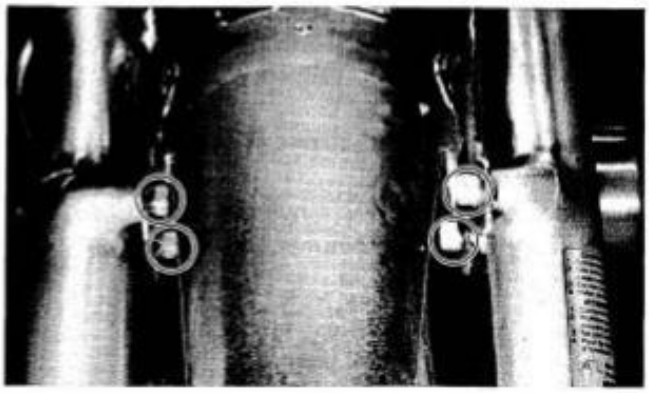

- Push in the air valve to relieve the air pressure completely.

- Loosen the front fork upper and lower clamp bolts and pull down the front forks.

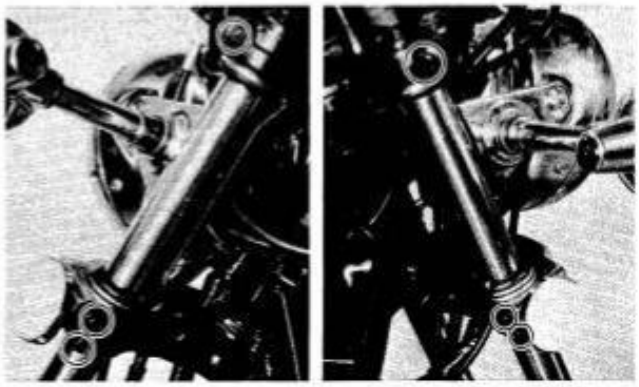

- Remove the cap, stopper ring ① and spring seat ② , and draw out fork spring.

NOTE:
To remove the stopper ring ①, it will be necessary to push the spring seat ② upwards to remove spring pressure from the stopper ring.
The removed stopper ring should be replaced.

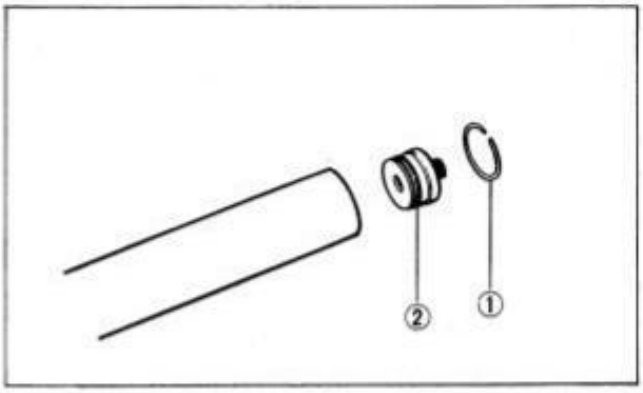

- Invert the fork and stroke it several times to let out the oil inside.
- Under this condition (inverted condition), hold the fork for a few minutes.

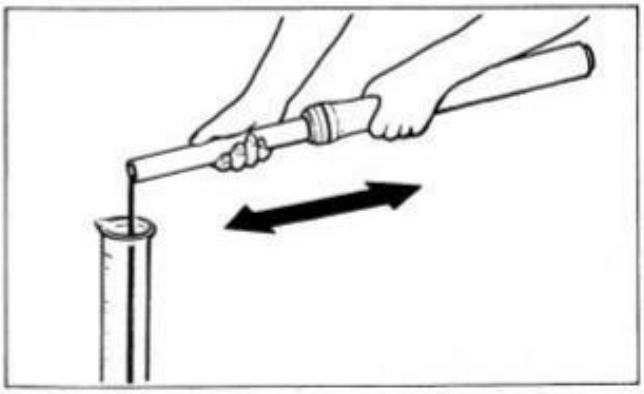

- Draw out the dust seal and circlip by using special tool.

09900-06108	Snap ring pliers

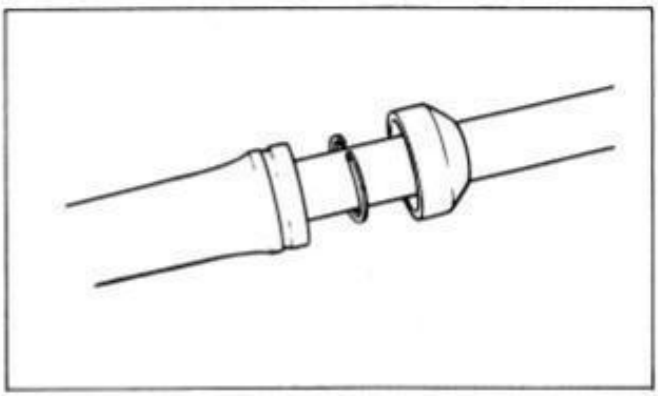

- Remove the damper rod securing bolt by using special tools.

09940-34520	"T" handle
09940-34561	Attachment "D"
09914-25811	"T" type hexagon wrench

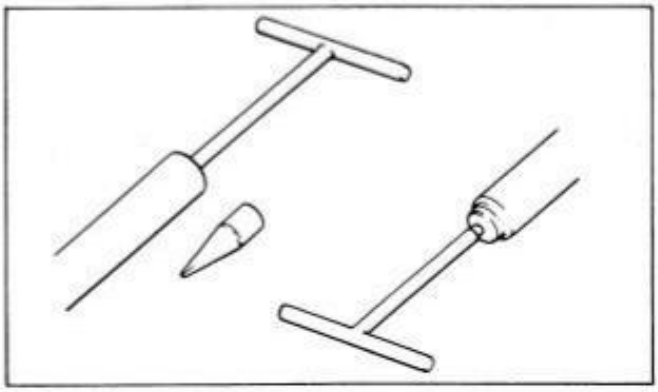

- Draw out damper rod and rebound spring.

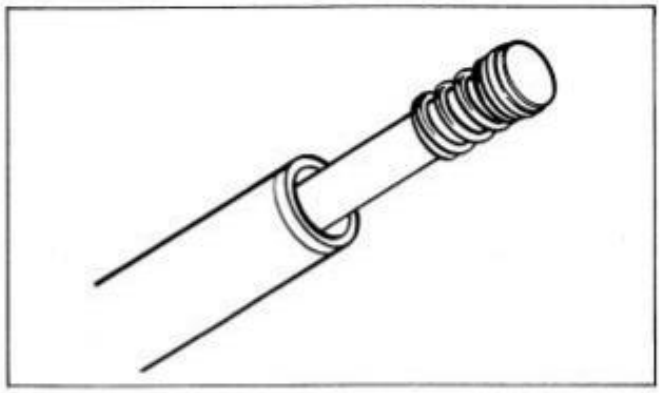

- While holding the caliper mounting portion of the outer tube by vise, separate the inner tube from the outer tube as shown.

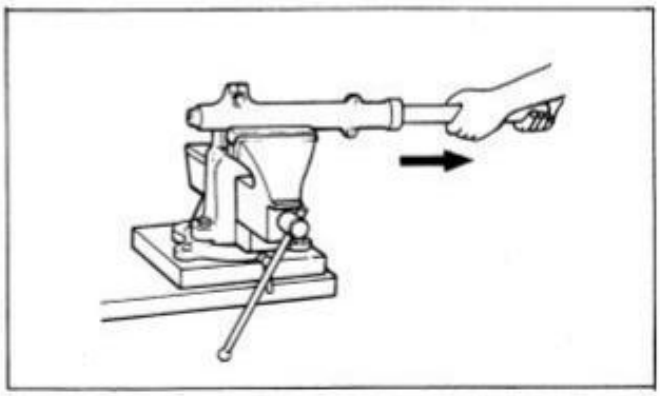

CAUTION:
The outer tube and inner tube "anti-friction" metals must be replaced along with the oil seal any time the fork is disassembled.

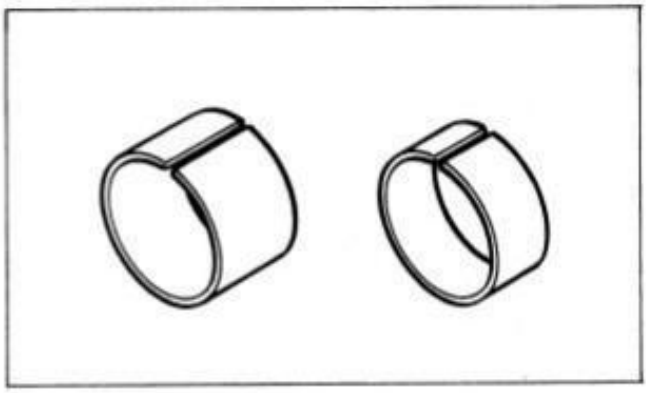

INSPECTION

DAMPER ROD RING

- Inspect damper rod ring for wear and damage.

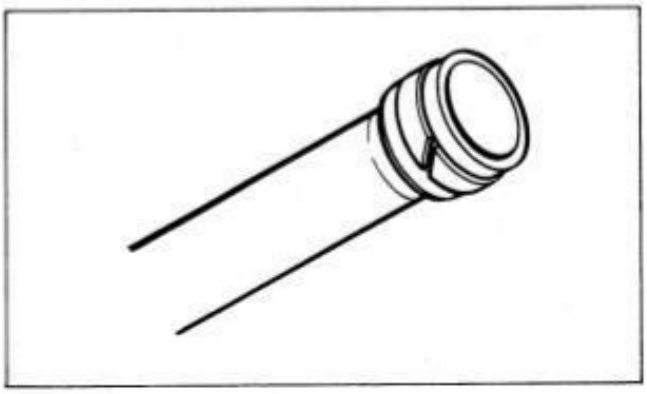

FORK SPRING

- Measure the fork spring free length. If it is shorter than service limit, replace it.

Service Limit	528 mm

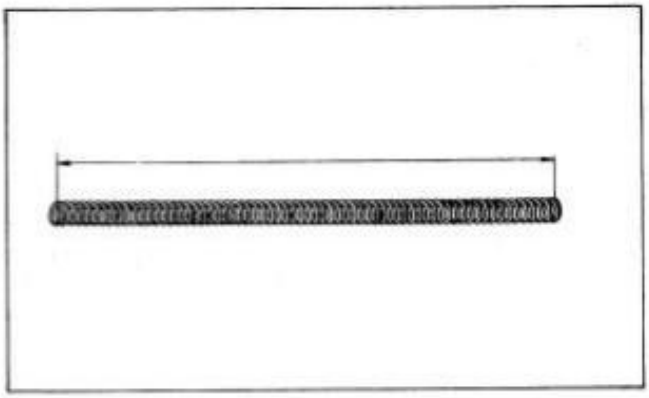

INNER TUBE

- Inspect inner tube outer surface for any scuffing.

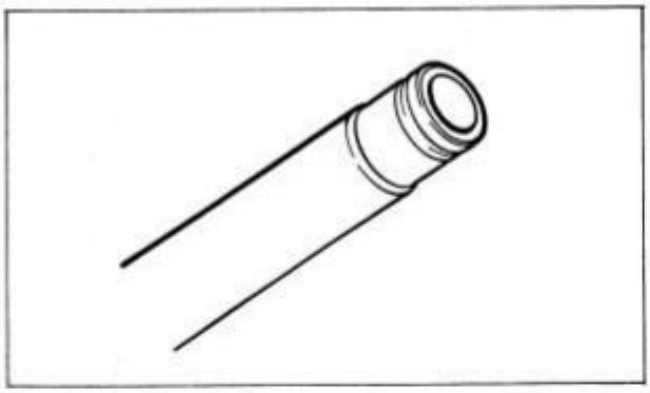

OUTER TUBE

- Inspect outer tube inner surface for any scuffing.

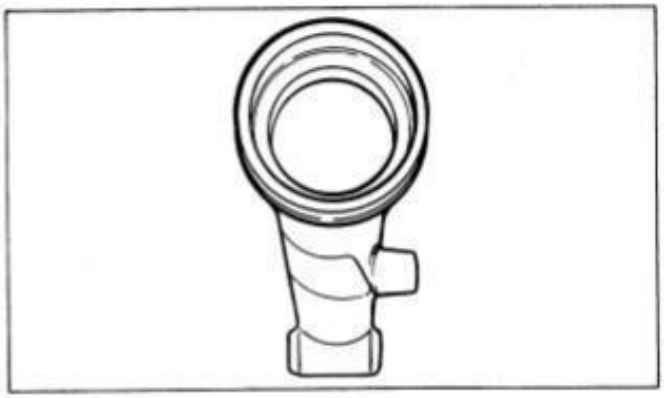

REASSEMBLY

Reassemble and remount the front fork in the reverse order of disassembly and removal, and also carry out the following steps:

INNER TUBE METAL

- Install the metal by hand as shown.

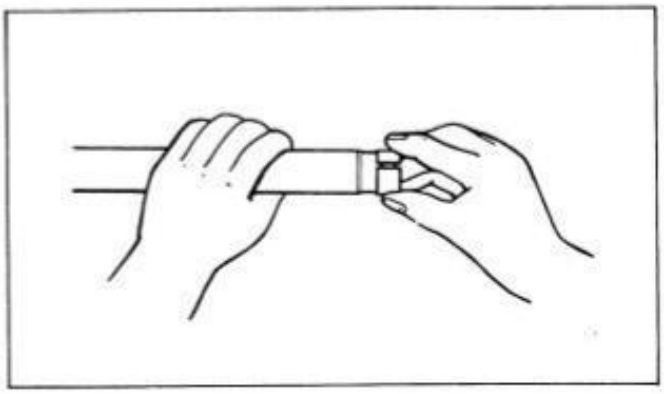

CAUTION:
Use special care to prevent damage to the Teflon coated surface of the Anti-friction metal when mounting it.

DAMPER ROD BOLT

- Apply Suzuki Bond No. 1215 and Thread Lock Cement to the damper rod bolt and tighten with specified torque.

99000-31110	SUZUKI BOND No. 1215
99000-32040	Thread Lock Cement

09940-34520	"T" handle
09940-34561	Attachment "D"
09914-25811	"T" type hexagon wrench

Tightening torque	15 – 25 N·m (1.5 – 2.5 kg·m)

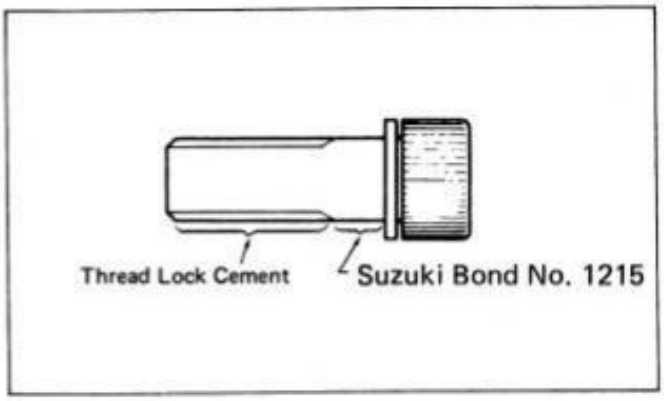

OUTER TUBE METAL, SPACER AND OIL SEAL

- Mounting outer tube metal, spacer and oil seal by using special tool as shown.

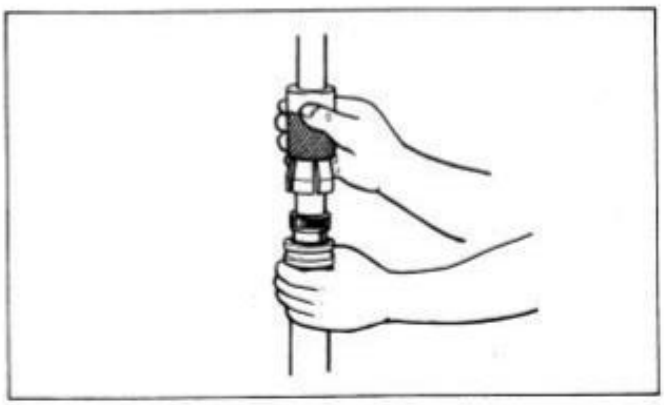

CAUTION:
Use special care to prevent damage to the Teflon coated surface of the anti-friction metal when mounting it.

09940-50111	Front fork oil seal installer

FORK OIL

- For the fork oil, be sure to use a motor oil whose viscocity rating meets specifications below.

Fork oil	Fork oil #15
Capacity	239 ml

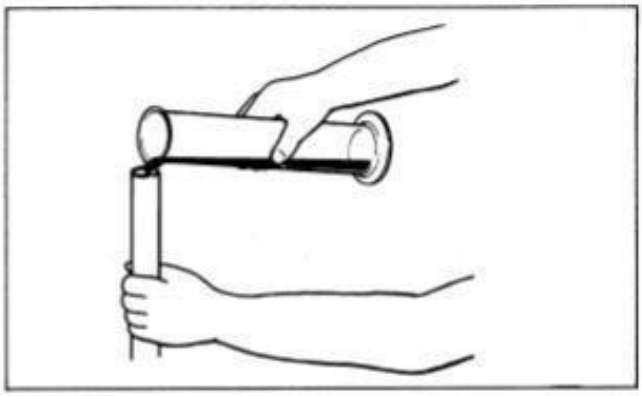

- Hold the front fork vertical and adjust the fork oil level with a special tool.

NOTE:
When adjusting oil level, remove the fork springs and compress the inner tube fully.

09943-74111	Fork oil level gauge
Oil level	144 mm

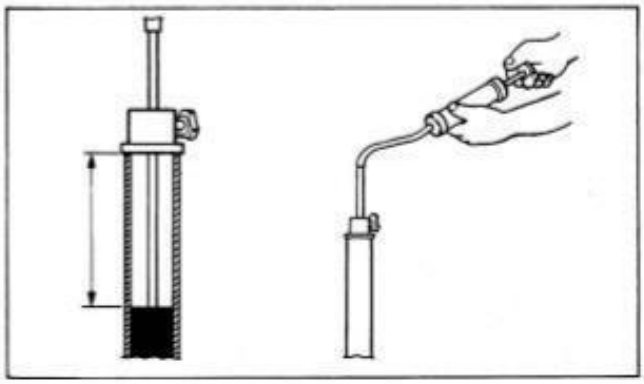

FORK SPRING

- The smaller end of the fork spring is positioned in the lower part of the fork leg.

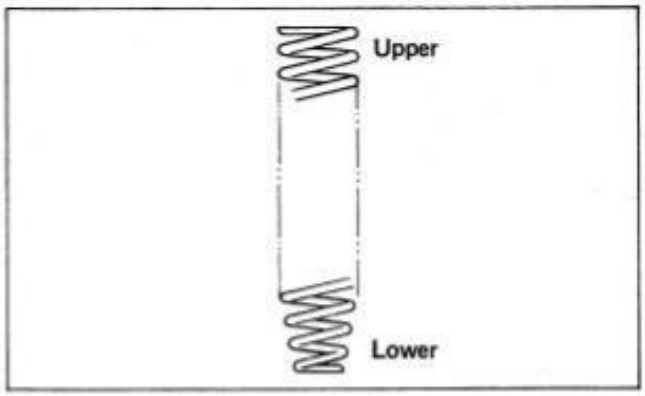

- To install a new stopper ring, it will be necessary to push the spring seat inward.

CAUTION:
- Always use a new stopper ring.
- After installing a stopper ring, always insure that it is completely seated in its groove and securely fitted.

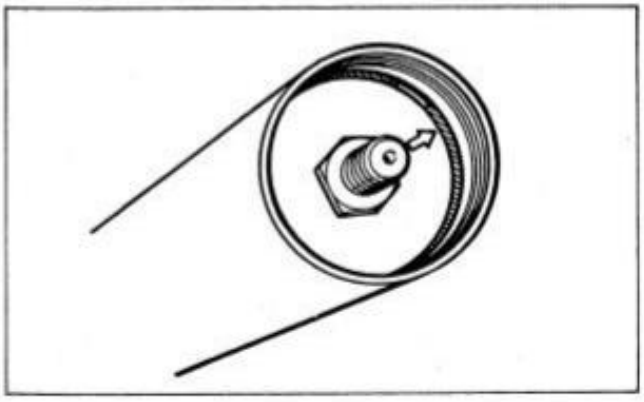

INNER TUBE

- Install the front fork assembly, align the top ① of inner tube to the upper surface ② of the steering stem upper bracket.

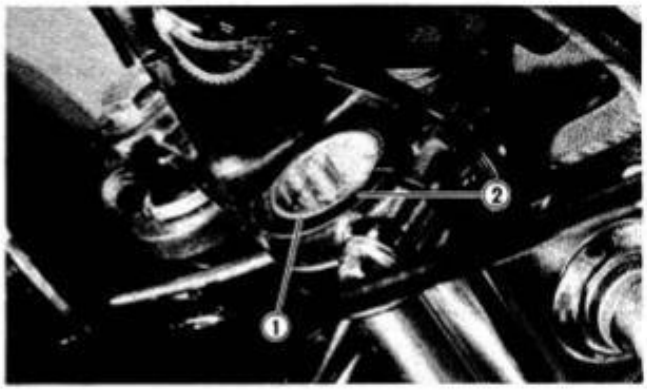

- Tighten the upper and lower clamp bolts.

Tightening-torque	Upper	35 – 55 N·m (3.5 – 5.5 kg-m)
	Lower	15 – 25 N·m (1.5 – 2.5 kg-m)

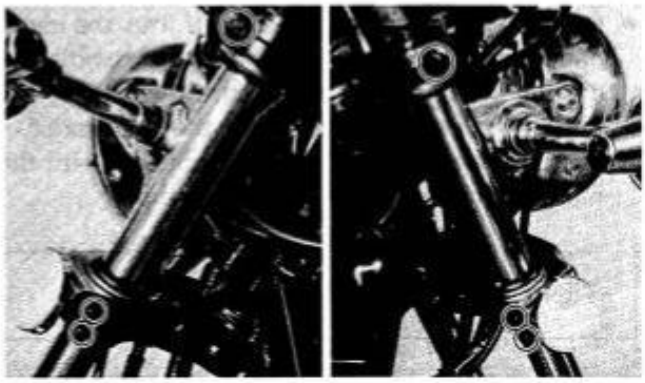

FORK AIR

- Lift up the front wheel with a jack.
- Block up the front of the motorcycle so the front wheel is off the ground.

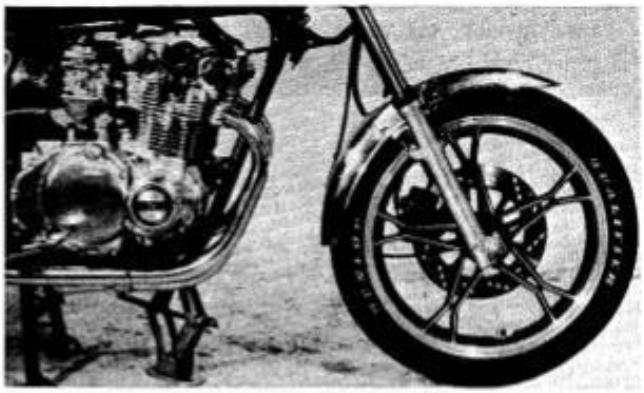

- Remove the handlebars.
- Connect the air pressure gauge to the valve ③, and turn the valve handle ④ clockwise. Connect the hand pump to the valve ⑤, turn the valve handle ⑥ clockwise, and pump the air. Let the air out by loosening the handle ⑥ till the specified air pressure is left inside. Loosen the valve handle ④, and remove the air pressure gauge.

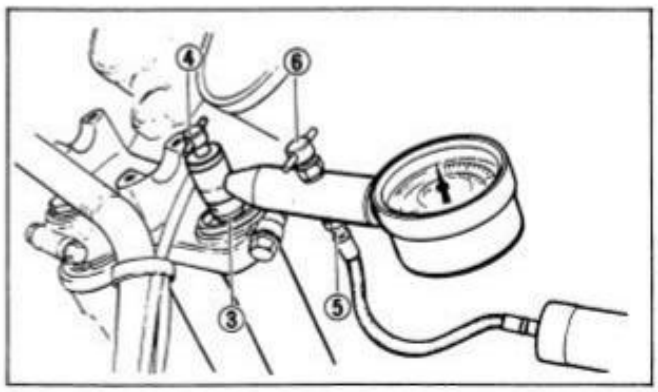

CAUTION:
During the air filling procedure do not exceed more than 250 kPa (2.50 kg/cm²). Balance the air pressure of both right and left forks within specification (10 kPa, 0.1 kg/cm²).

STD Air pressure	50 kPa (0.5 kg/cm²)

- Position the handlebars assembly into the lower handlebars clamp. Place the top handlebars clamps into position and secure them using the bolts and lock washers. Align the dot mark ① on the lower surface of the handlebars with the mating surface of the right side clamp.

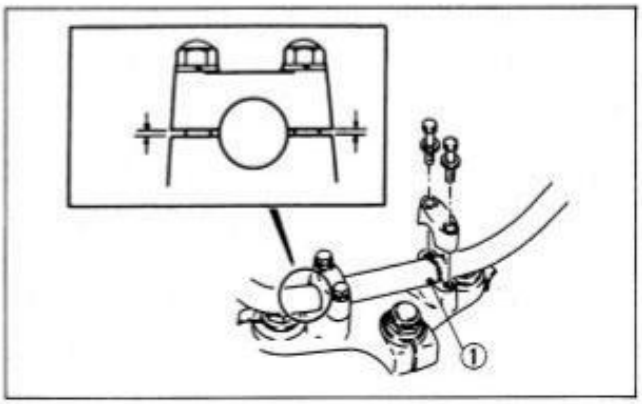

Tightening torque	12 – 20 N·m (1.2 – 2.0 kg-m)

CAUTION:
Make sure that each handlebar clamp is positioned squarely, with the clearances equalized between the front and the back.

FRONT MASTER CYLINDER

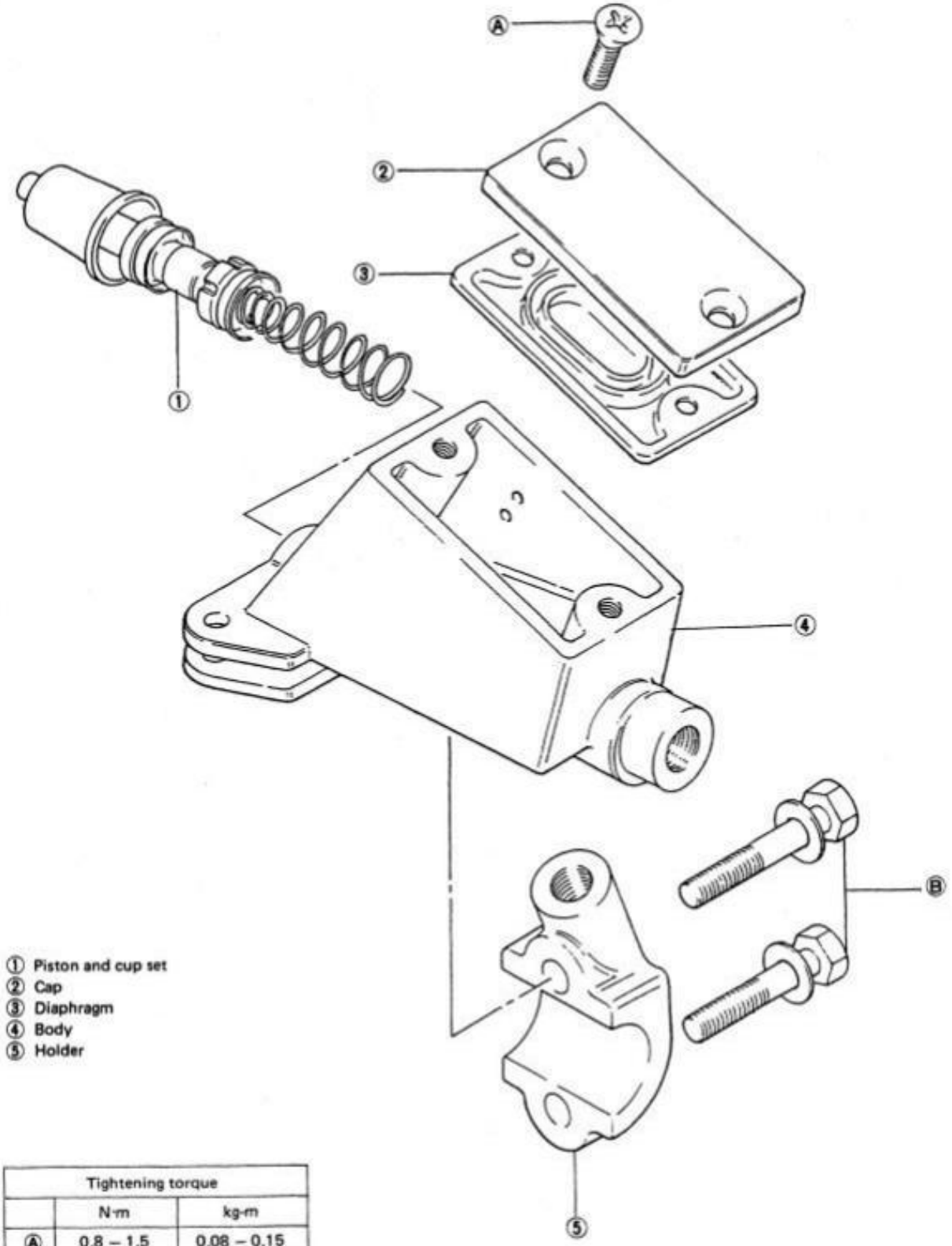

① Piston and cup set
② Cap
③ Diaphragm
④ Body
⑤ Holder

Tightening torque		
	N·m	kg-m
Ⓐ	0.8 – 1.5	0.08 – 0.15
Ⓑ	5 – 8	0.5 – 0.8

- Remove the front brake light switch and front brake lever.

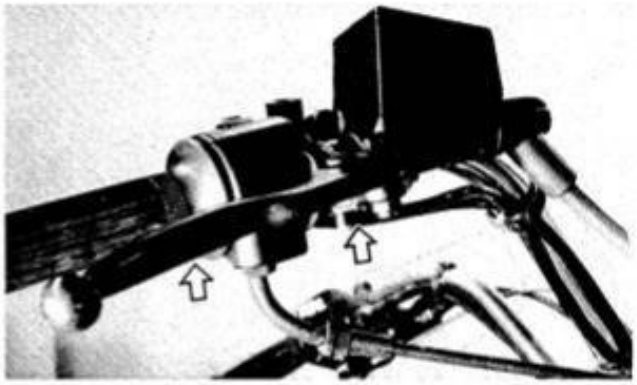

- Place a cloth underneath the union bolt on the master cylinder to catch spilled drops of brake fluid. Unscrew the union bolt and disconnect the brake hose/master cylinder joint.

CAUTION:
Immediately and completely wipe off any brake fluid contacting any part of the motorcycle. The fluid reacts chemically with paint, plastics, rubber, materials, etc. and will damage them severely.

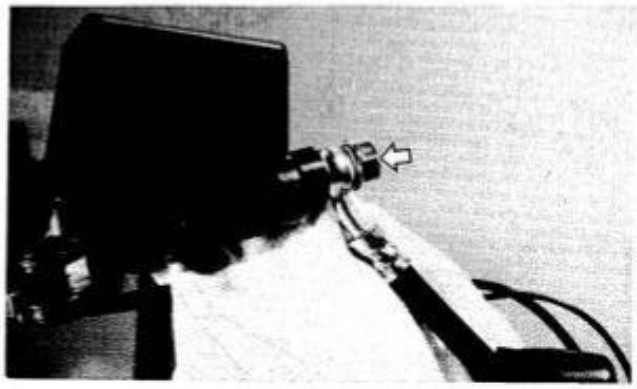

- Remove two clamp bolts and take off master cylinder.

- Remove two fitting screws, and remove the cap and diaphragm.
- Drain brake fluid.

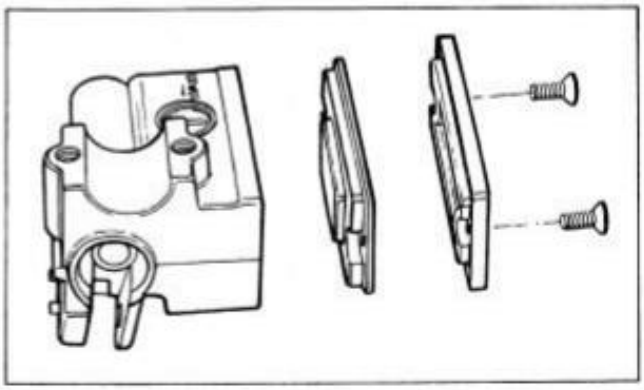

- Remove the dust seal boot.
- Remove the circlip by using special tool.

09900-06108	Snap ring pliers

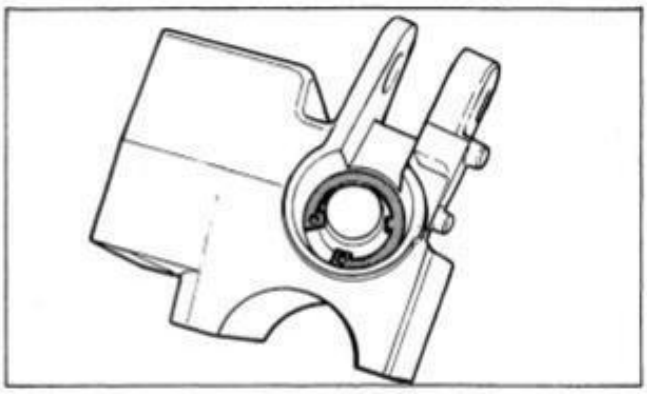

- Remove the piston, primary cup and spring.

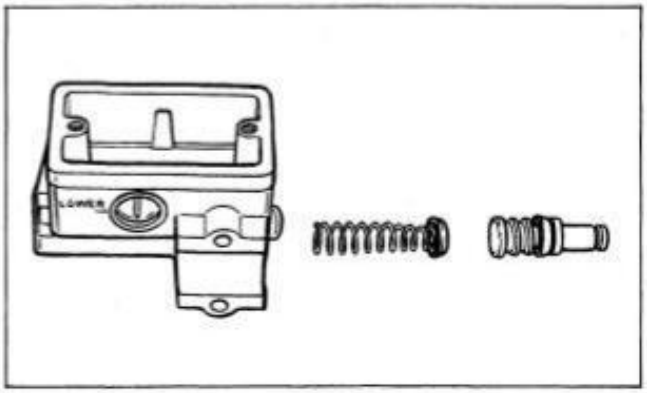

MASTER CYLINDER INSPECTION

- Inspect the master cylinder bore for any scratches or other damage.

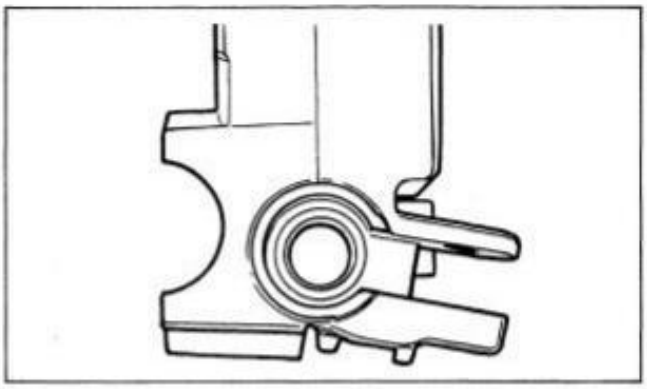

- Inspect the piston surface for scratches or other damage.

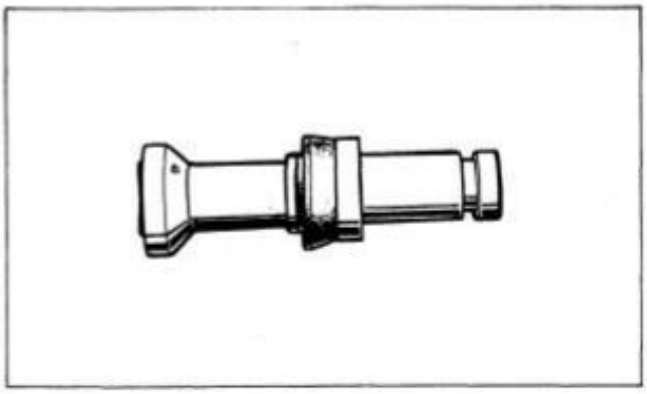

- Inspect the primary cup, secondary cup, and dust seal boot for wear or damage.

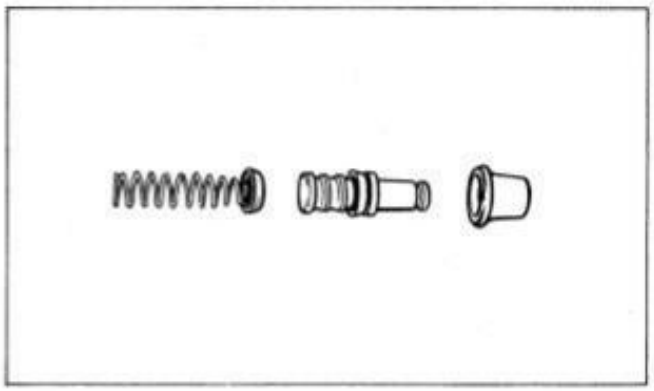

MASTER CYLINDER INSPECTION

Reassemble the master cylinder in the reverse orders of disassembly and by taking the following steps.

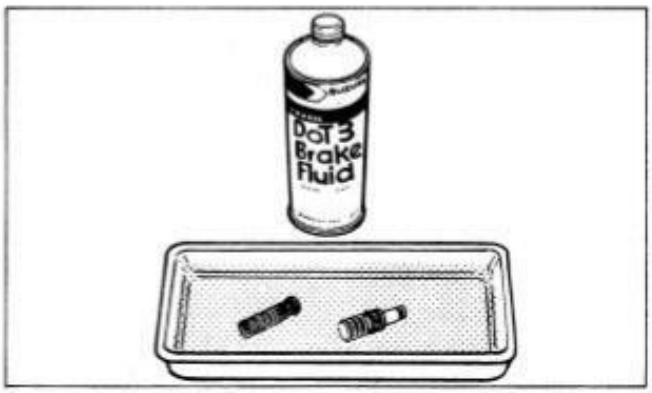

CAUTION:
Wash the master cylinder components with fresh brake fluid before reassembly. Never use cleaning solvent or gasoline to wash them. Apply brake fluid to the cylinder bore and all internal parts before inserting into the bore.

- When remounting the master cylinder on the handlebars, secure the clamp so that the clearances Ⓐ of both upside and downside of the handlebars stay equally.

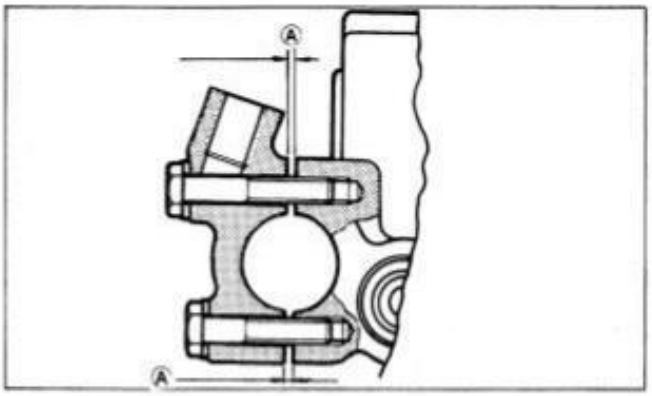

CAUTION:
Bleed the air after reassembling master cylinder.
Adjust the front brake light switch after installation.

REAR BRAKE

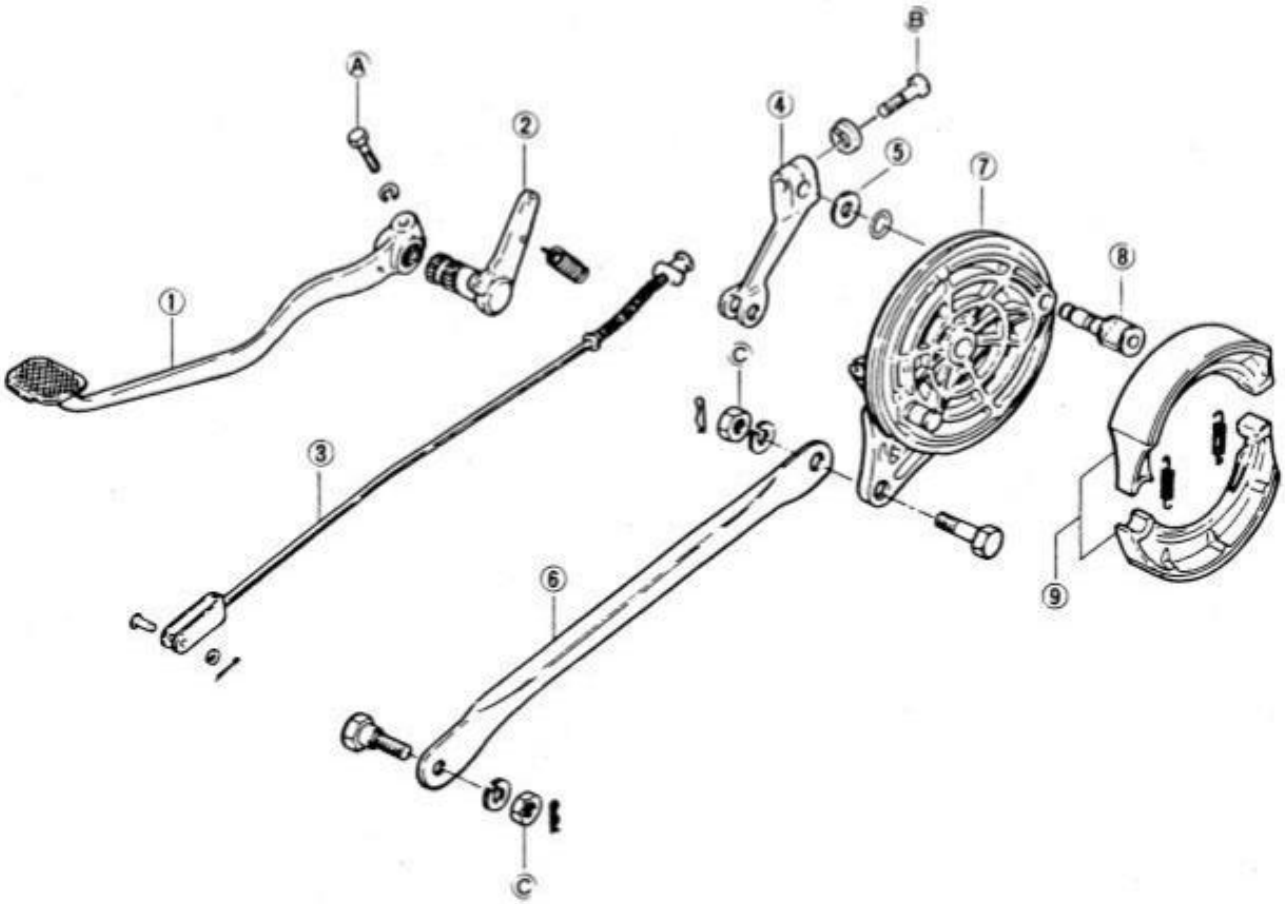

① Brake pedal
② Brake pedal rod arm
③ Brake rod Ass'y
④ Brake cam lever
⑤ O ring
⑥ Torque link
⑦ Brake panel
⑧ Brake cam
⑨ Brake shoe

Tightening torque		
	N·m	kg·m
Ⓐ	10 – 15	1.0 – 1.5
Ⓑ	5 – 8	0.5 – 0.8
Ⓒ	20 – 30	2.0 – 3.0

INSPECTION

BRAKE DRUM

Measure the brake drum I.D. to determine the extent of wear and, if the limit is exceeded by the wear noted, replace the drum. The value of this limit is indicated inside the drum.

Service limit	180.7 mm

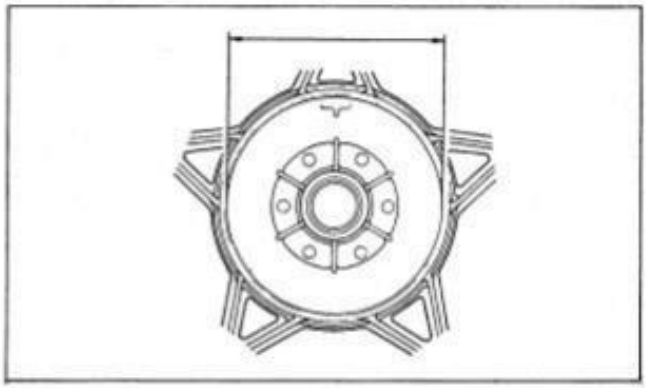

BRAKE SHOE

Check the brake shoe and decide whether it should be replaced or not from the thickness of the brake shoe lining.

Service Limit	1.5 mm

NOTE:
Replace the brake shoe with a set, otherwise braking performance will be adversely affected.

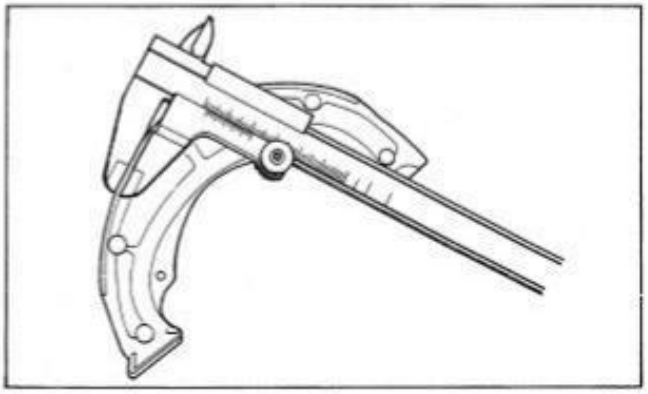

REMOUNTING

Apply a small amount of grease to the brake cam.

99000-25010	Suzuki Super Grease "A"

CAUTION:
Be careful not to apply too much grease to the brake cam shafts. If grease gets on the linings, brake slippage will result.

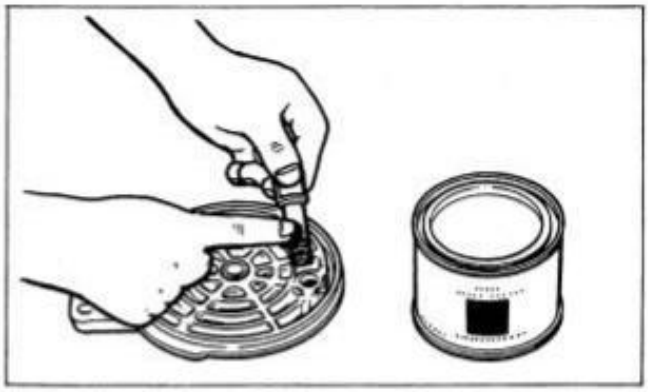

When installing the rear brake pedal, align the brake pedal groove with punched mark provided on the end face of brake pedal shaft.

CAUTION:
Adjust the drive chain slack, chain line alignment and rear brake pedal free travel after remounting.

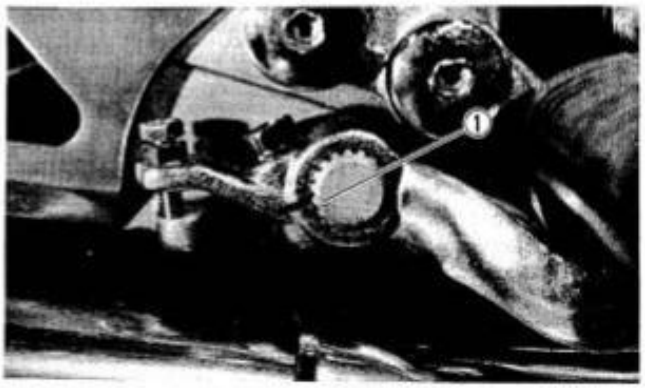

WIRE AND CABLE ROUTING

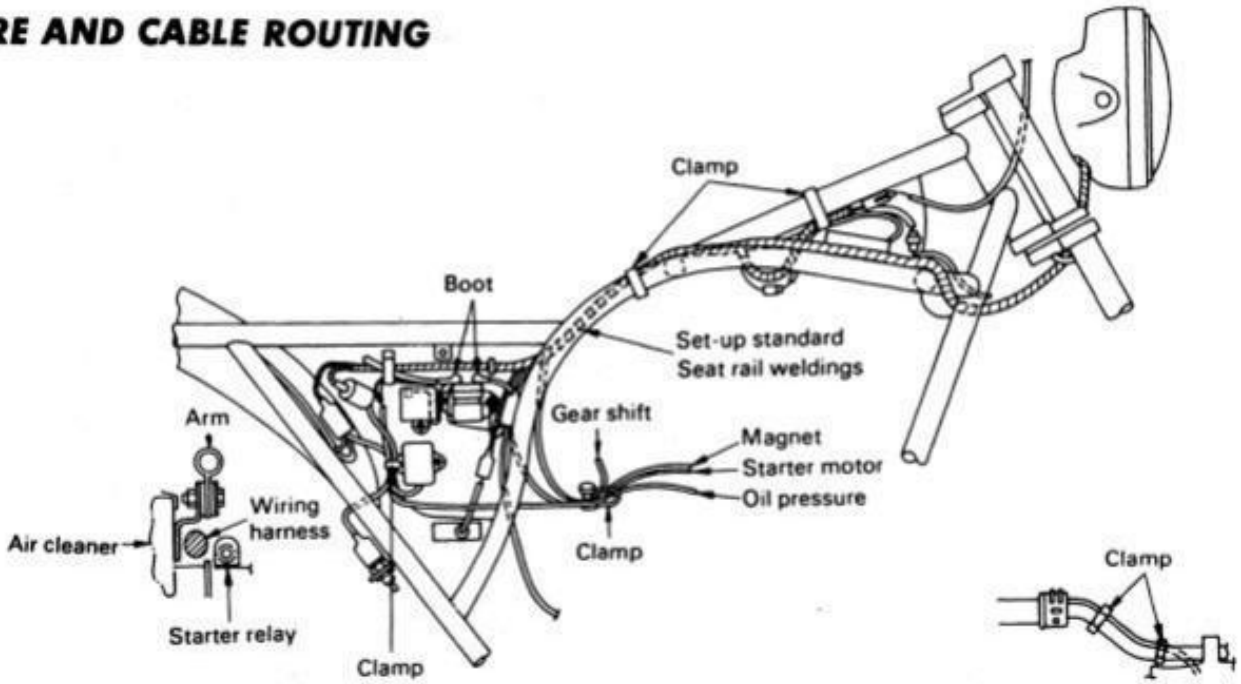

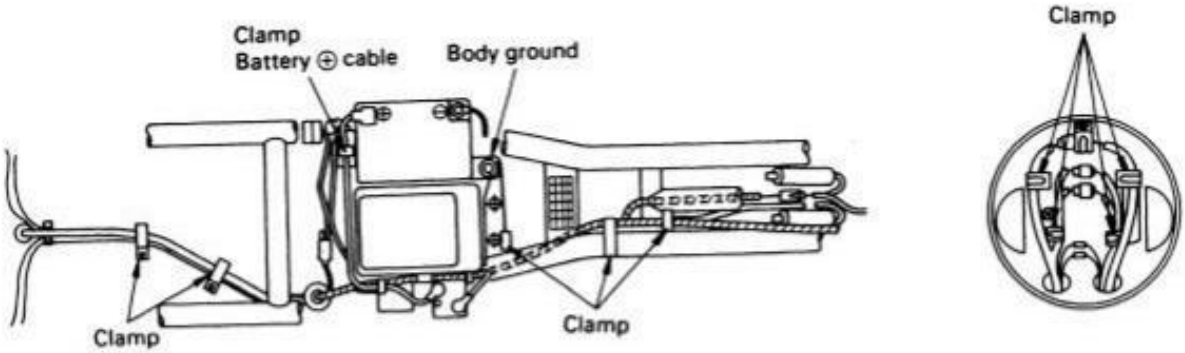

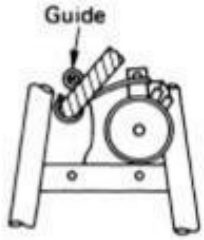

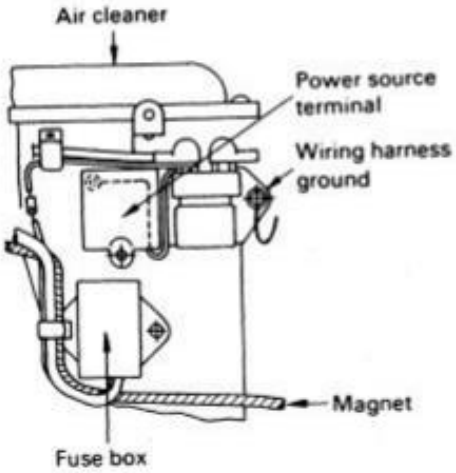

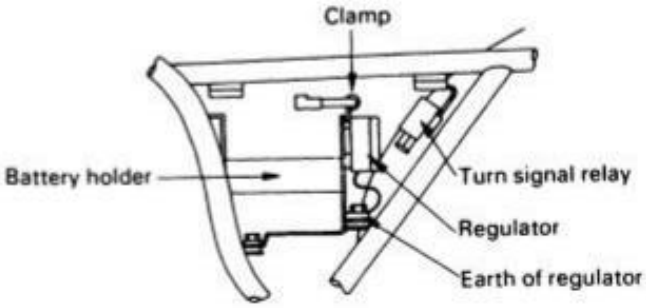

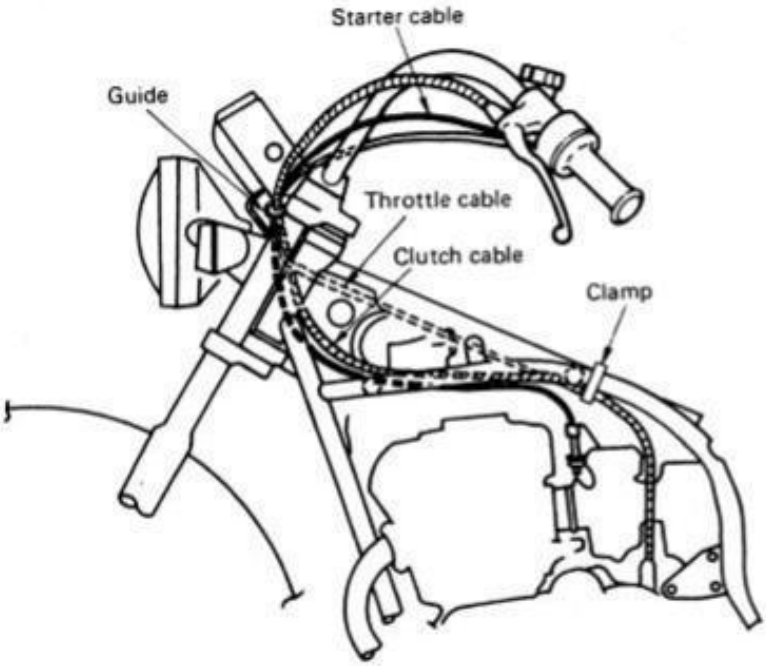
Starter cable
Guide
Throttle cable
Clutch cable
Clamp

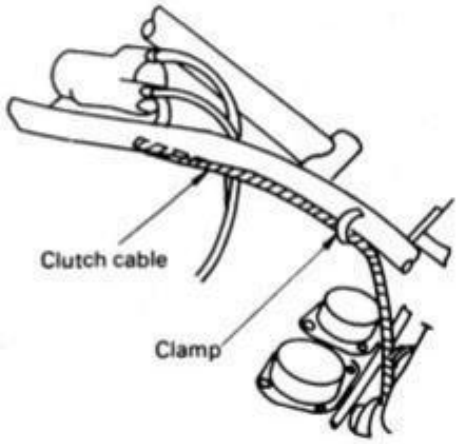
Clutch cable
Clamp

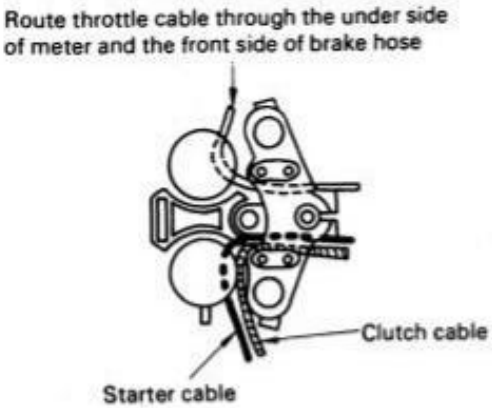
Route throttle cable through the under side of meter and the front side of brake hose
Clutch cable
Starter cable

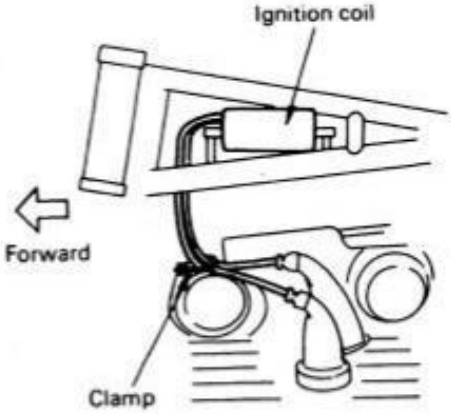
Ignition coil
Forward
Clamp

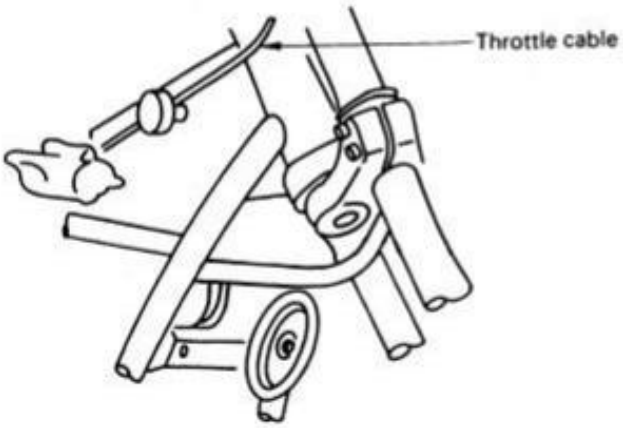
Throttle cable

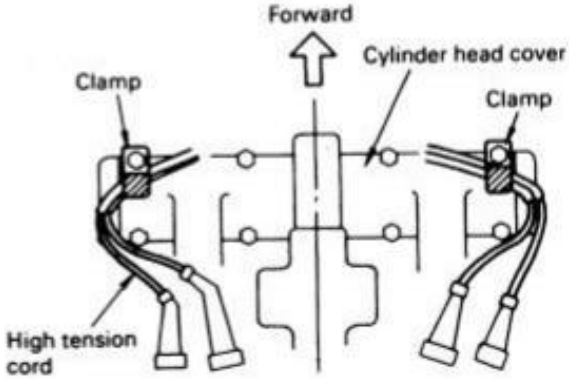
Forward
Cylinder head cover
Clamp
Clamp
High tension cord

WIRING DIAGRAM

For Austria, Denmark, Finland, France, The Netherlands and Sweden

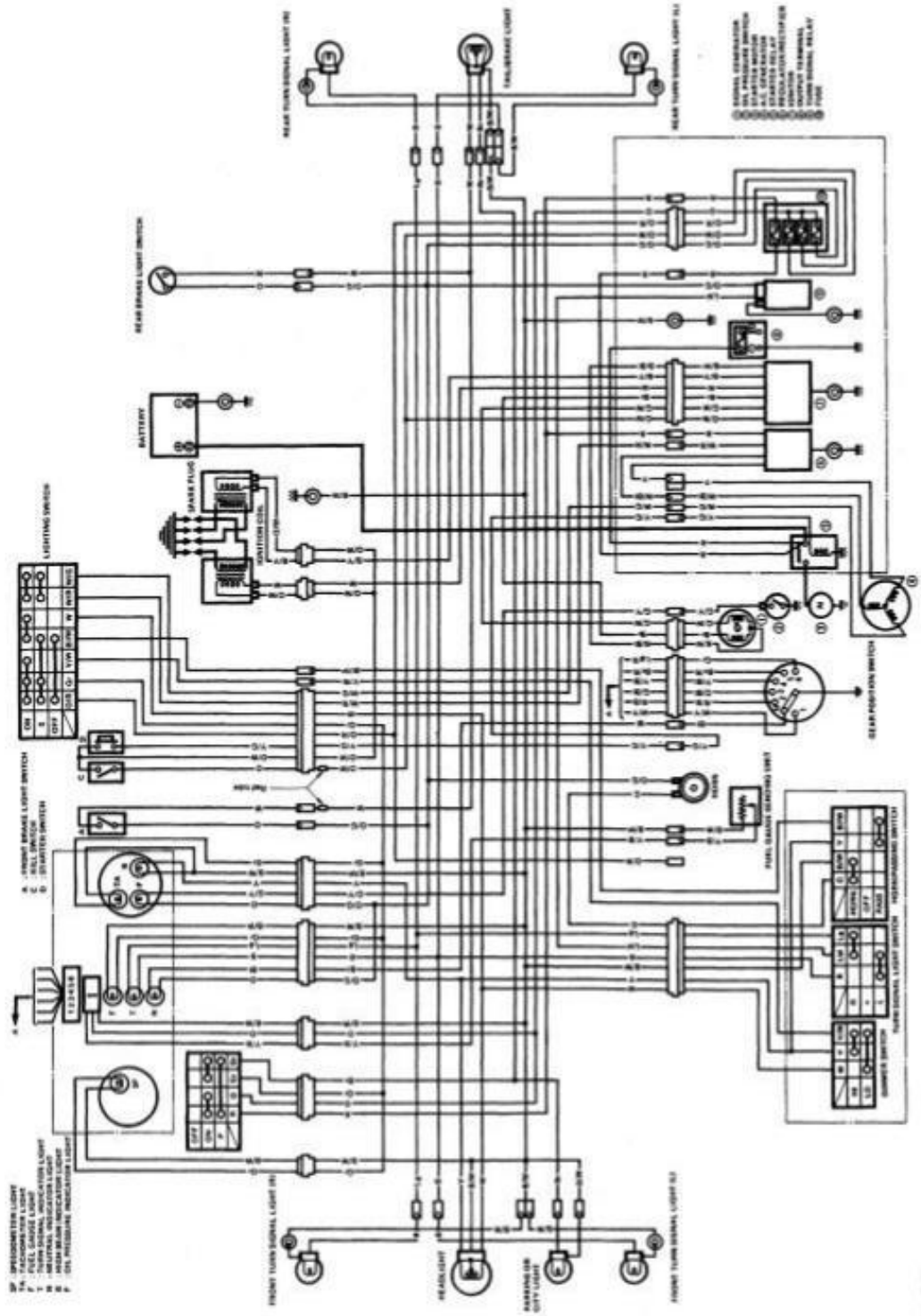

O/W	Orange with White tracer
R/B	Red with Black tracer
W/Bl	White with Blue tracer
W/G	White with Green tracer
W/R	White with Red tracer
W/Y	White with Yellow tracer
Y/B	Yellow with Black tracer
Y/Bl	Yellow with Blue tracer
Y/G	Yellow with Green tracer
Y/W	Yellow with White tracer

B/Bl	Black with Blue tracer
B/W	Black with White tracer
B/Y	Black with Yellow tracer
Bl/W	Blue with White tracer
Br/R	Brown with Red tracer
G/Bl	Green with Blue tracer
G/W	Green with White tracer
G/Y	Green with Yellow tracer
Lg/R	Light green with Red tracer
O/G	Orange with Green tracer
O/R	Orange with Red tracer

WIRE COLOR

B	Black
Bl	Blue
Br	Brown
G	Green
Gr	Gray
Lbl	Light blue
Lg	Light green
O	Orange
R	Red
W	White
Y	Yellow

For Australia

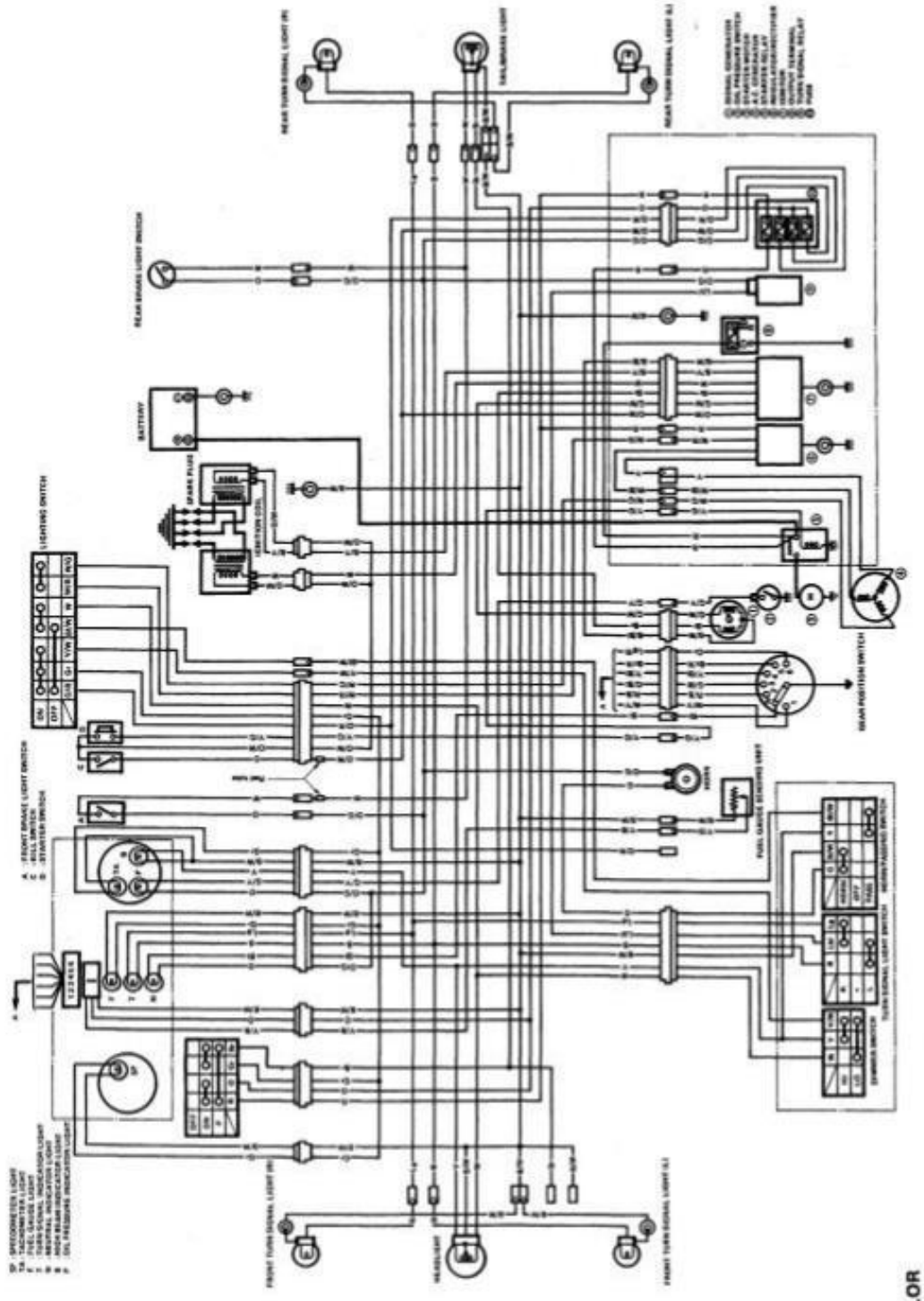

WIRE COLOR

B . . . . . Black
Bl . . . . . Blue
Br . . . . . Brown
G . . . . . Green
Gr . . . . . Gray
Lbl . . . . . Light blue
Lg . . . . . Light green
O . . . . . Orange
R . . . . . Red
W . . . . . White
Y . . . . . Yellow

B/Bl . . . . Black with Blue tracer
B/W . . . . Black with White tracer
B/Y . . . . Black with Yellow tracer
Bl/W . . . . Blue with White tracer
Br/R . . . . Brown with Red tracer
G/Bl . . . . Green with Blue tracer
G/W . . . . Green with White tracer
G/Y . . . . Green with Yellow tracer
Lg/R . . . . Light green with Red tracer
O/G . . . . Orange with Green tracer
O/R . . . . Orange with Red tracer

O/W . . . . Orange with White tracer
R/B . . . . Red with Black tracer
W/Bl . . . . White with Blue tracer
W/G . . . . White with Green tracer
W/R . . . . White with Red tracer
W/Y . . . . White with Yellow tracer
Y/B . . . . Yellow with Black tracer
Y/Bl . . . . Yellow with Blue tracer
Y/G . . . . Yellow with Green tracer
Y/W . . . . Yellow with White tracer

For Belgium

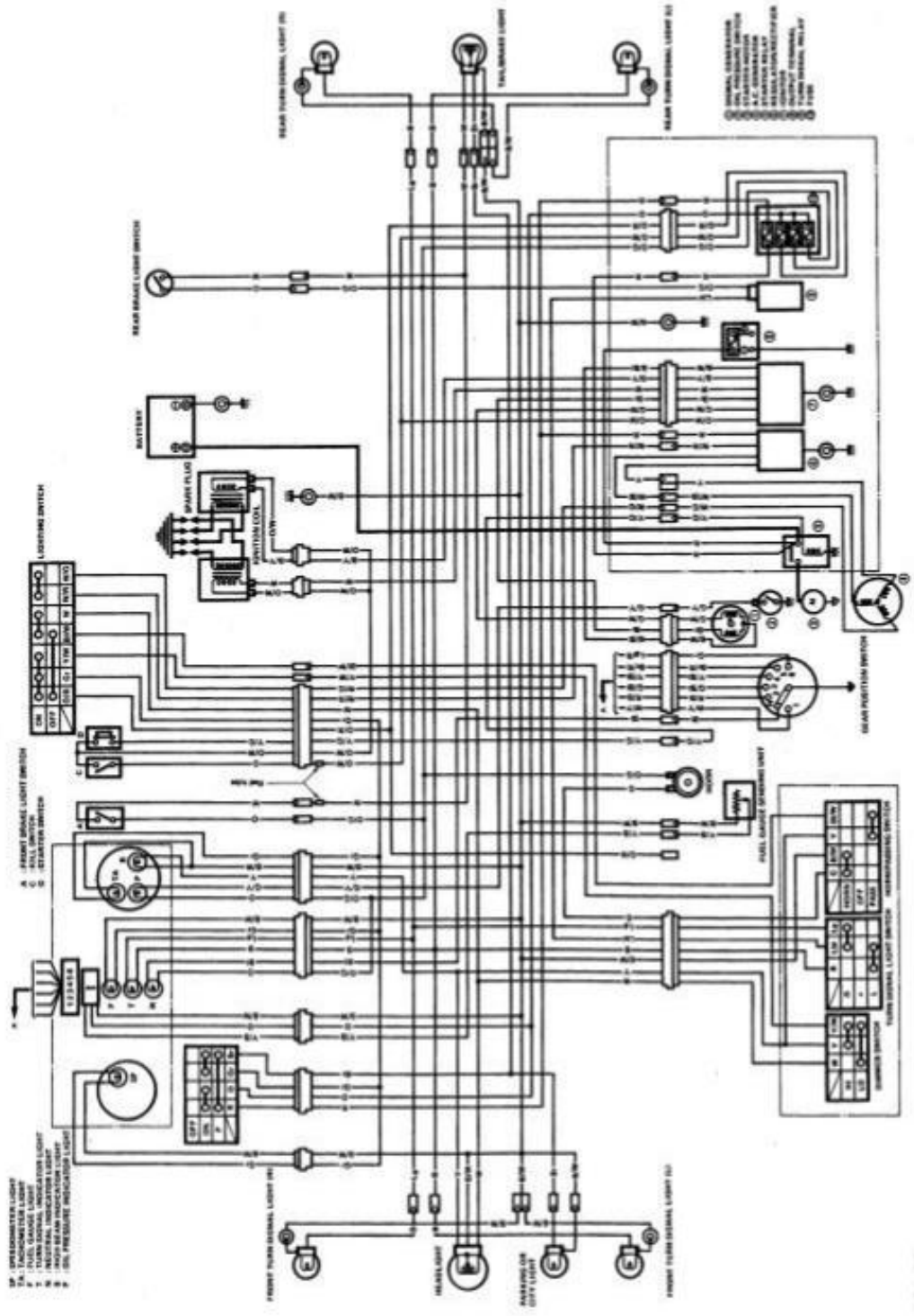

WIRE COLOR

B	Black
Bl	Blue
Br	Brown
G	Green
Gr	Gray
Lbl	Light blue
Lg	Light green
O	Orange
R	Red
W	White
Y	Yellow

B/Bl	Black with Blue tracer
B/W	Black with White tracer
B/Y	Black with Yellow tracer
Bl/W	Blue with White tracer
Br/R	Brown with Red tracer
G/Bl	Green with Blue tracer
G/W	Green with White tracer
G/Y	Green with Yellow tracer
Lg/R	Light green with Red tracer
O/G	Orange with Green tracer
O/R	Orange with Red tracer

O/W	Orange with White tracer
R/B	Red with Black tracer
W/Bl	White with Blue tracer
W/G	White with Green tracer
W/R	White with Red tracer
W/Y	White with Yellow tracer
Y/B	Yellow with Black tracer
Y/Bl	Yellow with Blue tracer
Y/G	Yellow with Green tracer
Y/W	Yellow with White tracer

For England

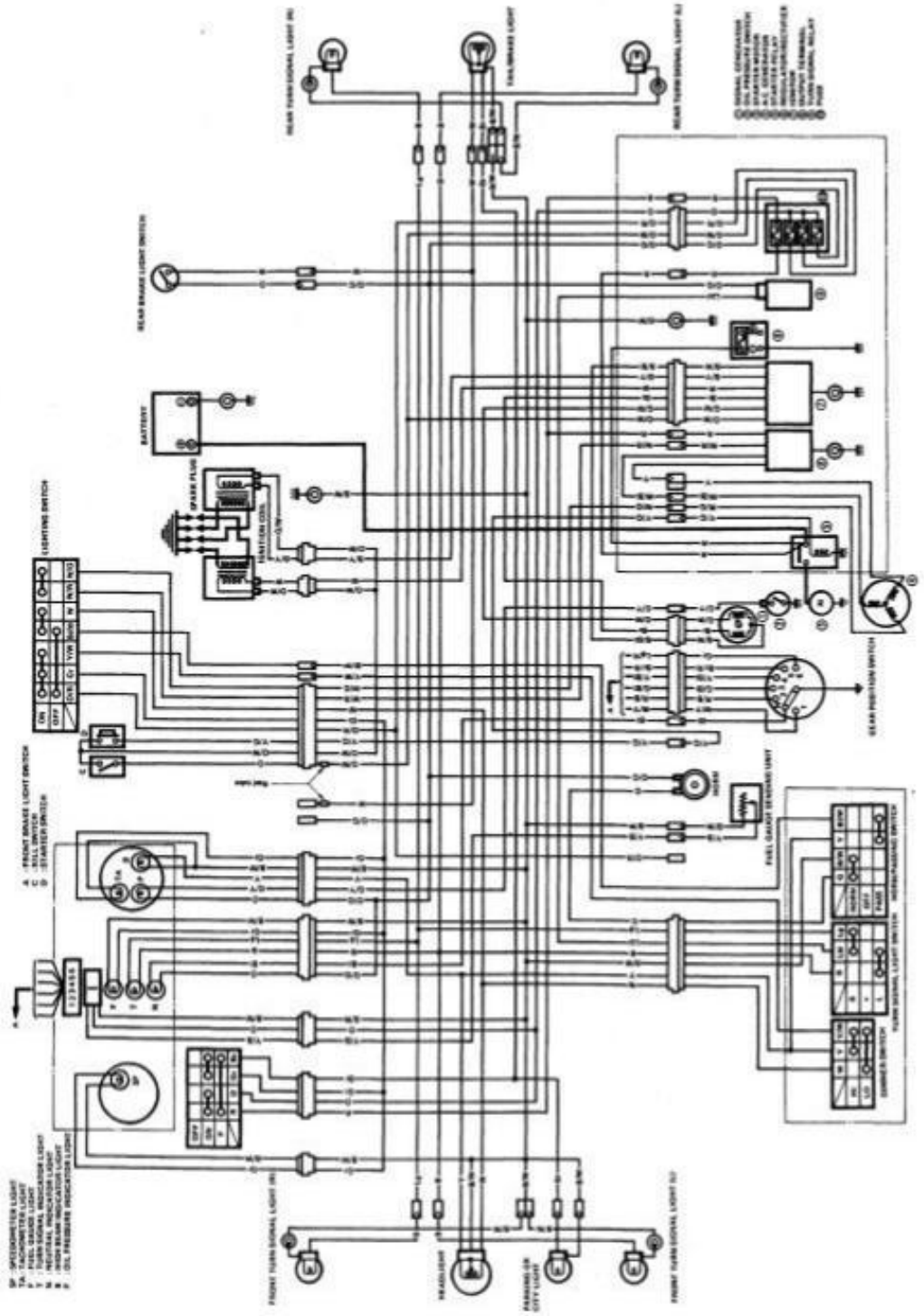

WIRE COLOR

B . . . . . Black
Bl . . . . . Blue
Br . . . . . Brown
G . . . . . Green
Gr . . . . . Gray
Lbl . . . . . Light blue
Lg . . . . . Light green
O . . . . . Orange
R . . . . . Red
W . . . . . White
Y . . . . . Yellow

B/Bl . . . . Black with Blue tracer
B/W . . . . Black with White tracer
B/Y . . . . Black with Yellow tracer
Bl/W . . . . Blue with White tracer
Br/R . . . . Brown with Red tracer
G/Bl . . . . Green with Blue tracer
G/W . . . . Green with White tracer
G/Y . . . . Green with Yellow tracer
Lg/R . . . . Light green with Red tracer
O/G . . . . Orange with Green tracer
O/R . . . . Orange with Red tracer

O/W . . . . Orange with White tracer
R/B . . . . Red with Black tracer
W/Bl . . . . White with Blue tracer
W/G . . . . White with Green tracer
W/R . . . . White with Red tracer
W/Y . . . . White with Yellow tracer
Y/B . . . . Yellow with Black tracer
Y/Bl . . . . Yellow with Blue tracer
Y/G . . . . Yellow with Green tracer
Y/W . . . . Yellow with White tracer

For Italy

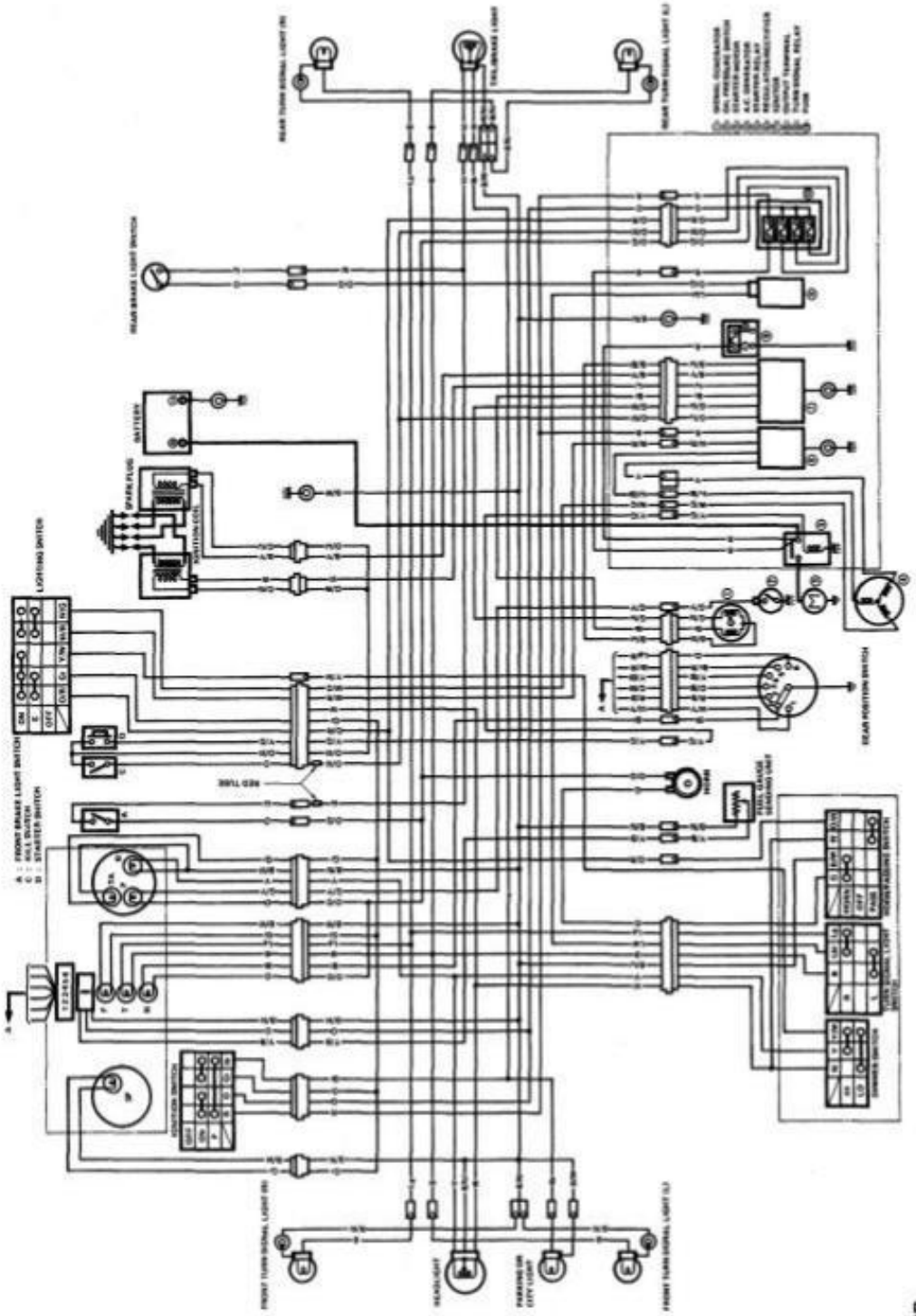

WIRE COLOR

B . . . . . Black
Bl . . . . . Blue
Br . . . . . Brown
G . . . . . Green
Gr . . . . . Gray
Lbl . . . . . Light blue
Lg . . . . . Light green
O . . . . . Orange
R . . . . . Red
W . . . . . White
Y . . . . . Yellow

B/Bl . . . . Black with Blue tracer
B/W . . . . Black with White tracer
B/Y . . . . Black with Yellow tracer
Bl/W . . . . Blue with White tracer
Br/R . . . . Brown with Red tracer
G/Bl . . . . Green with Blue tracer
G/W . . . . Green with White tracer
G/Y . . . . Green with Yellow tracer
Lg/R . . . . Light green with Red tracer
O/G . . . . Orange with Green tracer
O/R . . . . Orange with Red tracer

O/W . . . . Orange with White tracer
R/B . . . . Red with Black tracer
W/Bl . . . . White with Blue tracer
W/G . . . . White with Green tracer
W/R . . . . White with Red tracer
W/Y . . . . White with Yellow tracer
Y/B . . . . Yellow with Black tracer
Y/Bl . . . . Yellow with Blue tracer
Y/G . . . . Yellow with Green tracer
Y/W . . . . Yellow with White tracer

For South Africa and General markets

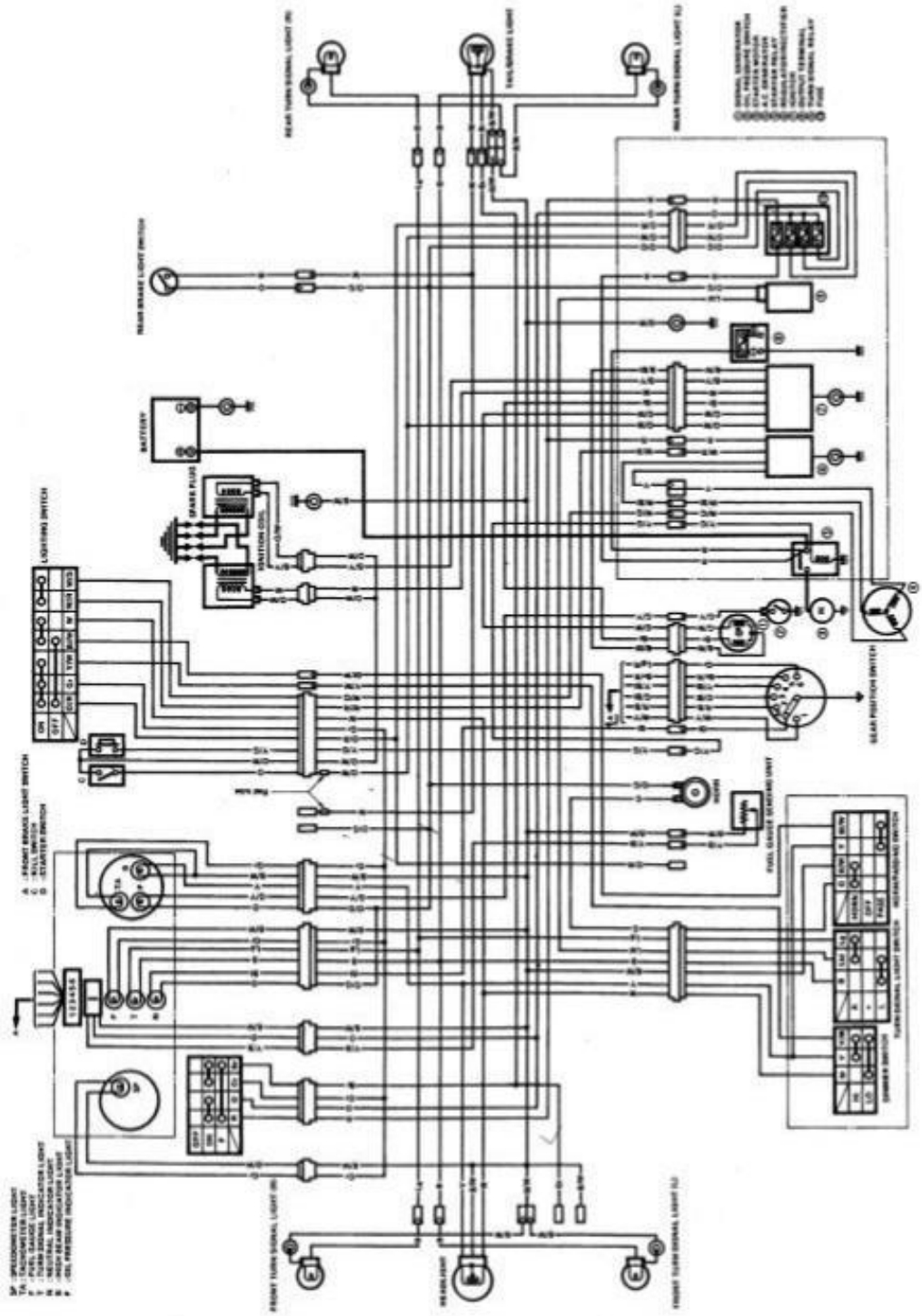

WIRE COLOR

B . . . . . Black
Bl . . . . . Blue
Br . . . . . Brown
G . . . . . Green
Gr . . . . . Gray
Lbl . . . . . Light blue
Lg . . . . . Light green
O . . . . . Orange
R . . . . . Red
W . . . . . White
Y . . . . . Yellow

B/Bl . . . . Black with Blue tracer
B/W . . . . Black with White tracer
B/Y . . . . Black with Yellow tracer
Bl/W . . . . Blue with White tracer
Br/R . . . . Brown with Red tracer
G/Bl . . . . Green with Blue tracer
G/W . . . . Green with White tracer
G/Y . . . . Green with Yellow tracer
Lg/R . . . . Light green with Red tracer
O/G . . . . Orange with Green tracer
O/R . . . . Orange with Red tracer

O/W . . . . Orange with White tracer
R/B . . . . Red with Black tracer
W/Bl . . . . White with Blue tracer
W/G . . . . White with Green tracer
W/R . . . . White with Red tracer
W/Y . . . . White with Yellow tracer
Y/B . . . . Yellow with Black tracer
Y/Bl . . . . Yellow with Blue tracer
Y/G . . . . Yellow with Green tracer
Y/W . . . . Yellow with White tracer

For West Germany

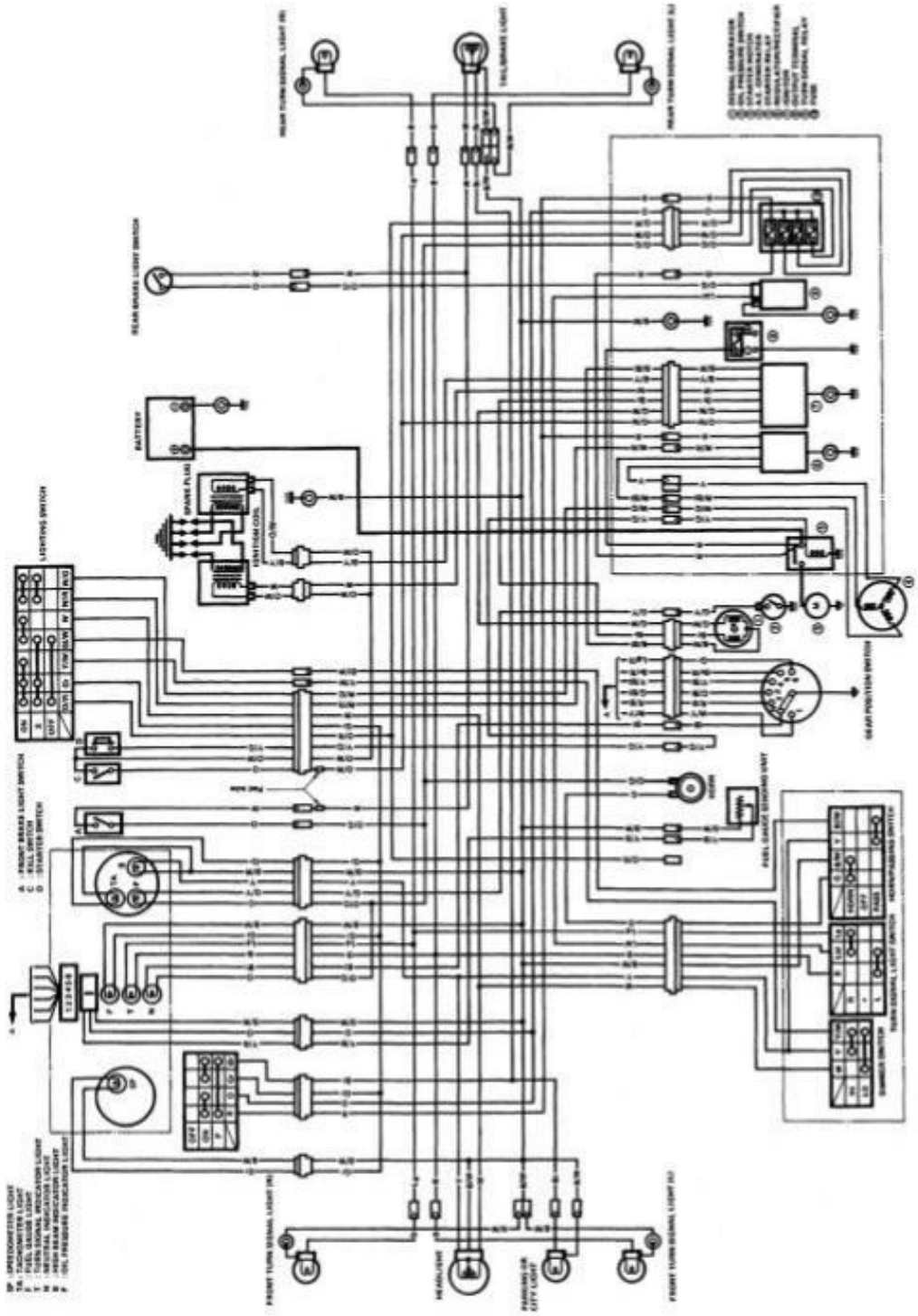

WIRE COLOR

B . . . . . Black
Bl . . . . . Blue
Br . . . . . Brown
G . . . . . Green
Gr . . . . . Gray
Lbl . . . . . Light blue
Lg . . . . . Light green
O . . . . . Orange
R . . . . . Red
W . . . . . White
Y . . . . . Yellow

B/Bl . . . . Black with Blue tracer
B/W . . . . Black with White tracer
B/Y . . . . Black with Yellow tracer
Bl/W . . . . Blue with White tracer
Br/R . . . . Brown with Red tracer
G/Bl . . . . Green with Blue tracer
G/W . . . . Green with White tracer
G/Y . . . . Green with Yellow tracer
Lg/R . . . . Light green with Red tracer
O/G . . . . Orange with Green tracer
O/R . . . . Orange with Red tracer

O/W . . . . Orange with White tracer
R/B . . . . Red with Black tracer
W/Bl . . . . White with Blue tracer
W/G . . . . White with Green tracer
W/R . . . . White with Red tracer
W/Y . . . . White with Yellow tracer
Y/B . . . . Yellow with Black tracer
Y/Bl . . . . Yellow with Blue tracer
Y/G . . . . Yellow with Green tracer
Y/W . . . . Yellow with White tracer

FOREWORD

This supplementary section has been produced to aid Suzuki mechanics in properly maintaining and repairing the 1982 "Z" model.
This supplementary section has been written primarily for the experienced Suzuki mechanic but will also be very useful even for the apprentice mechanics and do-it-yourself mechanic. The entire manual should be thoroughly reviewed before any servicing is performed.

Please also refer to the sections of 1 through 20 of this Service Manual for all other areas of information not covered in this section.

VIEW OF SUZUKI GS550MZ

Right Side

Left Side

CONTENTS

SPECIFICATIONS 696
SERVICE DATA 698
TORQUE TABLE 708
SPECIAL MATERIALS 711
PERIODIC MAINTENANCE 715
WIRE AND CABLE ROUTING 718
WIRING DIAGRAM 720

SPECIFICATIONS

DIMENSIONS AND DRY MASS

Overall length	2 145 mm (84.4 in)
Overall width	730 mm (28.7 in)
Overall height	1 110 mm (43.7 in)
Wheelbase	1 455 mm (57.3 in)
Ground clearance	160 mm (6.3 in)
Seat height	780 mm (30.7 in)
Dry mass	205 kg (452 lbs)

ENGINE

Type	Four-stroke, air-cooled, DOHC
Number of cylinders	4
Bore	56.0 mm (2.205 in)
Stroke	55.8 mm (2.197 in)
Piston displacement	549 cm^3 (33.5 cu.in)
Compression ratio	8.6 : 1
Carburetor	MIKUNI BS32SS, four
Air cleaner	Polyurethane foam element
Starter system	Electric
Lubrication system	Wet sump

TRANSMISSION

Clutch		Wet multi-plate type
Transmission		6-speed constant mesh
Gearshift pattern		1-down 5-up
Primary reduction		1.977 (87/44)
Final reduction		3.333 (50/15)
Gear ratios,	Low	2.666 (32/12)
	2nd	1.777 (32/18)
	3rd	1.380 (29/21)
	4th	1.173 (27/23)
	5th	1.045 (23/22)
	Top	0.956 (22/23)
Drive chain		DAIDO D.I.D.50HDL or TAKASAGO RK50SHO, 112 links

CHASSIS

Front suspension	Telescopic, pneumatic/coil spring, oil dampened
Rear suspension	Swinging arm, oil dampened damper 4-way, spring 5-way adjustable
Steering angle	40° (right and left)
Caster	61°50′
Trail	115 mm (4.53 in)
Turning radius	2.5 m (8.2 ft)
Front brake	Disc brake, twin
Rear brake	Disc brake
Front tire size	3.25H19 4PR
Rear tire size	3.75H18 4PR
Front tire pressure	1.75 kg/cm² (25 psi) (Normal solo riding)
Rear tire pressure	2.00 kg/cm² (28 psi) (Normal solo riding)

ELECTRICAL

Ignition type	Transistorized
Ignition timing	15° B.T.D.C. below 1 500 r/min and 40° B.T.D.C. above 2 350 r/min
Spark plug	NGK B8ES or NIPPON DENSO W24ES-U
Spark plug gap	0.6 – 0.8 mm (0.024 – 0.031 in) both NGK and NIPPON DENSO
Battery	12V 43.2 kC (12Ah)/10HR
Generator	Three-phase A.C. generator
Fuse	10/10/10/10/15A

CAPACITIES

Fuel tank including reserve		23 L (6.1/5.1 US/Imp gal)
	reserve	4.0 L (4.2/3.5 US/Imp qt)
Engine oil	change	2.4 L (2.5/2.1 US/Imp qt)
	filter change	2.6 L (2.7/2.3 US/Imp qt)
	overhaul	2.7 L (2.9/2.4 US/Imp qt)
Front fork oil		223 ml (7.54/7.85 US/Imp oz) in each leg

NOTE:
Specifications subject to change without notice.

SERVICE DATA

VALVES + GUIDES

Unit: mm (in)

ITEM	STANDARD		LIMIT
Valve Diam.	IN.	32.0 (1.26)	—
	EX.	27.0 (1.06)	—
Valve lift	IN.	7.2 (0.28)	—
	EX.	7.0 (0.27)	—
Valve clearance or Tappet clearance (when cold)	IN. & EX.	0.03 – 0.08 (0.001 – 0.003)	—
Valve guide to Valve stem clearance	IN.	0.025 – 0.050 (0.0008 – 0.0020)	0.35 (0.014)
	EX.	0.030 – 0.060 (0.0012 – 0.0024)	0.35 (0.014)
Valve guide I.D.	IN. & EX.	7.000 – 7.015 (0.2756 – 0.2762)	—
Valve stem O.D.	IN.	6.965 – 6.980 (0.2742 – 0.2748)	—
	EX.	6.955 – 6.970 (0.2738 – 0.2744)	—
Valve stem runout	IN. & EX.	—	0.05 (0.002)
Valve head thickness	IN. & EX.	—	0.5 (0.02)
Valve stem end length	IN. & EX.	—	4.0 (0.16)
Valve seat width	IN. & EX.	0.9 – 1.1 (0.035 – 0.043)	—
Valve head radial runout	IN. & EX.	—	0.03 (0.001)
Valve spring free length (IN. & EX.)	INNER	—	33.9 (1.33)
	OUTER	—	41.3 (1.63)
Valve spring tension (IN. & EX.)	INNER	8.9 – 12.5 kg (19.6 – 27.6 lbs) at length 31 (1.2)	—
	OUTER	22.1 – 27.1 kg (48.7 – 59.7 lbs) at length 35 (1.4)	—

CAMSHAFT + CYLINDERHEAD

Unit: mm (in)

ITEM	STANDARD		LIMIT
Cam height	IN.	35.485 – 35.515 (1.3970 – 1.3982)	35.190 (1.3854)
	EX.	35.285 – 35.315 (1.3892 – 1.3904)	34.990 (1.3776)
Camshaft journal oil clearance	IN. & EX.	0.020 – 0.054 (0.0008 – 0.0021)	0.150 (0.0059)
Camshaft journal holder I.D.	IN. & EX.	22.000 – 22.013 (0.8661 – 0.8667)	——
Camshaft journal O.D.	IN. & EX.	21.959 – 21.980 (0.8645 – 0.8654)	——
Camshaft runout	IN. & EX.	——	0.10 (0.004)
Cam chain 20 pitch length		——	157.8 (6.213)
Cam chain pin (at arrow "3")		20 th pin	——
Cylinder head distortion		——	0.2 (0.008)

CYLINDER + PISTON + PISTON RING

Unit: mm (in)

ITEM			STANDARD	LIMIT
Compression pressure			9.0 – 13.0 kg/cm² (128 – 185 psi)	7.0 kg/cm² (100 psi)
Compression pressure difference			——	2.0 kg/cm² (28 psi)
Piston to Cylinder clearance			0.045 – 0.055 (0.0018 – 0.0022)	0.120 (0.0047)
Cylinder bore			56.000 – 56.015 (2.2047 – 2.2053)	56.085 (2.2081)
Piston Diam.			55.950 – 55.965 (2.2026 – 2.2031) Measure the 15 (0.59) from piston skirt end.	55.880 (2.2000)
Cylinder distortion			——	0.26 (0.010)
Piston ring free end gap	1st	N&T	Approx. 6.5 (0.26)	5.2 (0.20)
	2nd	N&T	Approx. 6.5 (0.26)	5.2 (0.20)
Piston ring end gap	1st		0.10 – 0.30 (0.004 – 0.012)	0.70 (0.03)
	2nd		0.10 – 0.30 (0.004 – 0.012)	0.70 (0.03)
Piston ring groove clearance	1st		——	0.180 (0.0071)
	2nd		——	0.150 (0.0059)
Piston ring groove width	1st		1.21 – 1.23 (0.047 – 0.048)	——
	2nd		1.21 – 1.23 (0.047 – 0.048)	——
	Oil		2.51 – 2.53 (0.099 – 0.100)	——
Piston ring thickness	1st		1.175 – 1.190 (0.0463 – 0.0469)	——
	2nd		1.170 – 1.190 (0.0461 – 0.0469)	——
Piston pin bore I.D.			16.002 – 16.008 (0.6300 – 0.6302)	16.030 (0.6311)
Piston pin O.D.			15.995 – 16.000 (0.6297 – 0.6300)	15.980 (0.6291)

CONROD + CRANKSHAFT

Unit: mm (in)

ITEM	STANDARD	LIMIT
Conrod small end I.D.	16.006 – 16.014 (0.6302 – 0.6305)	16.040 (0.6315)
Conrod deflection	—	3.0 (0.12)
Conrod big end side clearance	0.10 – 0.65 (0.004 – 0.026)	1.0 (0.039)
Crankshaft runout	—	0.10 (0.004)

OIL PUMP

ITEM	STANDARD	LIMIT
Oil pump reduction ratio	1.821 (87/44 x 35/38)	—
Oil pressure (at 60°C, 140°F)	Above 0.1 kg/cm² (1.42 psi) Below 0.3 kg/cm² (4.27 psi) at 3 000 r/min.	—

CLUTCH

Unit: mm (in)

ITEM	STANDARD	LIMIT
Clutch cable play	2 – 3 (0.08 – 0.12)	—
Clutch release screw	1/4 – 1/2 turn back	—
Drive plate thickness	2.9 – 3.1 (0.11 – 0.12)	2.6 (0.10)
Drive plate claw width	11.8 – 12.0 (0.46 – 0.47)	11.0 (0.43)
Driven plate thickness	1.6 ± 0.06 (0.06 ± 0.002)	—
Driven plate distortion	—	0.1 (0.004)
Clutch spring free length	—	36.5 (1.44)

TRANSMISSION

Unit: mm (in)

ITEM	STANDARD		LIMIT
Primary reduction	1.977 (87 / 44)		—
Final reduction	3.333 (50 / 15)		—
Gear ratios	Low	2.666 (32 / 12)	—
	2nd	1.777 (32 / 18)	—
	3rd	1.380 (29 / 21)	—
	4th	1.173 (27 / 23)	—
	5th	1.045 (23 / 22)	—
	Top	0.956 (22 / 23)	—
Shift fork to Groove clearance	0.1 – 0.3 (0.004 – 0.012)		0.5 (0.020)
Shift fork groove width	5.5 – 5.6 (0.217 – 0.220)		—
Shift fork thickness	5.3 – 5.4 (0.195 – 0.199)		—
Drive chain	Type	D.I.D.: 50HDL TAKASAGO: RK50SHO	—
	Links	112	—
	20 pitch length	—	320.0 (12.60)
Drive chain slack	20 – 30 (0.8 – 1.2)		—

CARBURETOR

ITEM		SPECIFICATION	
		E-03	E-28
Carburetor type		MIKUNI BS32SS	←
Bore size		32 (1.26)	←
I.D. No.		47160	47170
Idle r/min.		1 100 ± 100 r/min.	←
Fuel level		5.0 ± 0.5 (0.20 ± 0.02)	←
Float height		22.4 ± 1.0 (0.88 ± 0.04)	←
Main jet	(M.J.)	#92.5	# 92.5
Main air jet	(M.A.J.)	1.6	←
Jet needle	(J.N.)	4BEL2	5F42-3rd
Needle jet	(N.J.)	X-6	X-6
Pilot jet	(P.J.)	#40	# 40
Throttle valve	(T.V.)	#135	←
By pass	(B.P.)	0.9, 0.7, 0.7	1.0, 0.8, 0.8
Pilot outlet	(P.O.)	0.7	←
Valve seat	(V.S.)	2.0	←
Starter jet	(G.S.)	#35	←
Pilot screw	(P.S.)	PRE-SET	←
Pilot air jet	(P.A.J.)	#150	#120
Throttle cable play		0.5 – 1.0 (0.02 – 0.04)	←

NOTE: E-03: For U.S.A.
E-28: For CANADA

ELECTRICAL

Unit. mm (in)

ITEM	SPECIFICATION	
Ignition timing	15° B.T.D.C. Below 1 500 ± 100 r/min. and 40° B.T.D.C. Above 2 350 ± 100 r/min.	
Firing order	1 · 2 · 4 · 3	
Spark plug	Type	NGK: B8ES N.D.: W24ES-U
	Gap	0.6 – 0.8 (0.024 – 0.031)
Spark performance	Over 8 (0.3) at 1 atm.	
Signal coil resistance	Approx.	G/W–B/W 60 – 80Ω
Ignition coil resistance	Primary	O/W–W or B/Y Approx. 3 – 5 Ω
	Secondary	Plug cap – Plug cap Approx. 30 – 35 kΩ
Generator No-Load voltage	More than 80 V (AC) at 5 000 r/min.	
Regulated voltage	14.0 – 15.5 V at 5 000 r/min.	
Starter motor	Brush length	Limit: 6 (0.24)
	Commutator under cut	Limit: 0.2 (0.008)
Starter relay resistance	3 – 4 Ω	
Battery	Type designation	YB10L – A2
	Capacity	12V 43.2kC (12Ah)/10HR
	Standard electrolyte S.G.	1.28 at 20°C (68°F)
Fuse size	Main	15A
	Headlight	10A
	Turn signal	10A
	Ignition	10A
	Output terminal	10A

BRAKE + WHEEL

Unit: mm (in)

ITEM		STANDARD	LIMIT
Rear brake pedal height		40 (1.6)	—
Brake disc thickness	Front	5.0 ± 0.2 (0.20 ± 0.008)	4.5 (0.18)
	Rear	6.7 ± 0.2 (0.26 ± 0.008)	6.0 (0.24)
Brake disc runout	Front	—	0.30 (0.012)
Master cylinder bore	Front	15.870 – 15.913 (0.6248 – 0.6265)	—
	Rear	14.000 – 14.043 (0.5512 – 0.5529)	—
Master cylinder piston diam.	Front	15.811 – 15.838 (0.6225 – 0.6235)	—
	Rear	13.957 – 13.984 (0.5495 – 0.5506)	—
Brake caliper cylinder bore	Front	38.180 – 38.219 (1.5031 – 1.5047)	—
	Rear	38.180 – 38.219 (1.5031 – 1.5047)	—
Brake caliper piston diam.	Front	38.098 – 38.148 (1.500 – 1.5020)	—
	Rear	38.098 – 38.148 (1.500 – 1.5020)	—
Wheel rim runout	Axial	—	2.0 (0.08)
	Radial	—	2.0 (0.08)
Wheel axle runout	Front	—	0.25 (0.010)
	Rear	—	0.25 (0.010)
Tire size	Front	3.25H19 4PR	—
	Rear	3.75H18 4PR	—
Tire tread depth	Front	—	1.6 (0.06)
	Rear	—	2.0 (0.08)

SUSPENSION

Unit: mm (in)

ITEM	STANDARD	LIMIT
Front fork stroke	150 (5.9)	——
Front fork spring free length	——	494 (19.4)
Front fork oil level	140 (5.5)	——
Front fork air pressure S.T.D.	0.5 kg/cm² (7.11 psi)	——
Rear wheel travel	105 (4.1)	——
Swinging arm pivot shaft runout	——	0.3 (0.012)

FUEL + OIL + CAPACITY

ITEM	SPECIFICATION	
Fuel type	Use only unleaded or low-lead type gasoline of at least 85–95 pump octane ($\frac{R+M}{2}$ method) or 89 octane or higher rated by the Research Method.	E-03
	Gasoline used should be graded 85–95 octane or higher. An unleaded or low-lead gasoline type is recommended.	E-28
Fuel tank including reserve	23L (6.1/5.1 US/Imp gal)	
reserve	4.0L (4.2/3.5 US/Imp qt)	
Engine oil type	SAE 10W/40	
Engine oil capacity	Change	2 400 ml (2.5/2.1 US/Imp qt)
	Filter change	2 600 ml (2.7/2.3 US/Imp qt)
	Overhaul	2 700 ml (2.9/2.4 US/Imp qt)
Front fork oil type	Fork oil #15	
Front fork oil capacity (each leg)	223 ml (7.54/7.85 US/Imp oz)	
Brake fluid type	DOT3 or DOT4	

NOTE: E-03: For U.S.A.
E-28: For CANADA

TIRE PRESSURE

COLD INFLATION TIRE PRESSURE	NORMAL RIDING						CONTINUOUS HIGH SPEED RIDING					
	SOLO RIDING			DUAL RIDING			SOLO RIDING			DUAL RIDING		
	kPa	kg/cm²	psi	kPa	kg/cm²	psi	kPa	kg/cm²	psi	kPa	kg/cm²	psi
FRONT	175	1.75	24	175	1.75	24	200	2.00	28	200	2.00	28
REAR	200	2.00	28	250	2.50	36	225	2.25	32	280	2.80	40

WATTAGE

Unit: W (cp)

ITEM		SPECIFICATION
Headlight	HI	60
	LO	55
Tail/Brake light		8/23 (3/32)
License light		8 (4)
Turn signal light		23 (32)
Speedometer light		3.4
Tachometer light		3.4
Fuelmeter light		1.7
Turn signal indicator light		3.4
High beam indicator light		3.4
Neutral indicator light		3.4
Oil pressure indicator light		3.4
Gear position indicator light		1.4

TORQUE TABLE

ENGINE

ITEM	kg-m	lb-ft
Cylinder head cover bolt	0.7 – 1.1	5.0 – 8.0
Cylinder head bolt	0.7 – 1.1	5.0 – 8.0
Cylinder head nut	2.3 – 2.7	16.5 – 19.5
Camshaft bearing cap bolt	0.8 – 1.2	6.0 – 8.5
Camshaft sprocket bolt	2.4 – 2.6	17.5 – 19.0
Cam chain tensioner lock nut	1.0 – 1.2	7.0 – 8.5
Generator rotor bolt	6.0 – 7.0	43.5 – 50.5
Advance governor bolt	1.8 – 2.3	13.0 – 16.5
Starter motor bolt	0.4 – 0.7	3.0 – 5.0
Starter clutch bolt	1.5 – 2.0	11.0 – 14.5
Clutch sleeve hub nut	4.0 – 6.0	29.0 – 43.5
Clutch spring bolt	0.6 – 1.0	4.5 – 7.0
Oil strainer screw	0.4 – 0.7	3.0 – 5.0
Gear shifting cam stopper spring holder bolt	1.8 – 2.8	13.0 – 20.0
Gear shift arm stopper bolt	1.5 – 2.3	11.0 – 16.5
Crankcase bolt (6 mm)	0.6 – 1.0	4.5 – 7.0
Crankcase bolt (8 mm)	1.8 – 2.2	13.0 – 16.0
Engine mounting nut (8 mm)	1.3 – 2.3	9.5 – 16.5
Engine mounting nut (10 mm)	2.5 – 4.5	18.0 – 32.5
Exhaust pipe bolt	0.9 – 1.4	6.5 – 10.0
Muffler bolt	1.8 – 2.8	13.0 – 20.0
Gear shift lever bolt	0.6 – 1.0	4.5 – 7.0
Engine sprocket nut	5.0 – 7.0	36.0 – 50.5

CHASSIS

ITEM	kg-m	lb-ft
Handlebar clamp bolt	1.2 – 2.0	8.5 – 14.5
Steering stem upper clamp bolt	1.5 – 2.5	11.0 – 18.0
Front fork upper bracket bolt (R, L)	3.5 – 5.5	25.5 – 40.0
Front fork lower bracket bolt (R, L)	1.5 – 2.5	11.0 – 18.0
Front fork damper rod bolt	1.5 – 2.5	11.0 – 18.0
Steering stem head bolt	3.6 – 5.2	26.0 – 37.5
Front fork axle holder nut	1.5 – 2.5	11.0 – 18.0
Front fork cap bolt	1.5 – 3.0	11.0 – 21.5
Front fork air valve	0.6 – 0.9	4.5 – 6.5
Front axle shaft nut	3.6 – 5.2	26.0 – 37.5
Swinging arm pivot nut	5.0 – 8.0	36.0 – 58.0
Rear torque link nut	2.0 – 3.0	14.5 – 21.5
Rear axle nut	5.0 – 8.0	36.0 – 58.0
Rear shock absorber nut	2.0 – 3.0	14.5 – 21.5
Footrest bolt	2.7 – 4.3	19.5 – 31.0
Front brake caliper mounting bolt	2.0 – 4.0	14.5 – 29.0
Front brake disc plate bolt	1.5 – 2.5	11.0 – 18.0
Front brake caliper axle bolt	4.0 – 5.5	29.0 – 40.0
Front brake master cylinder mounting bolt	0.5 – 0.8	3.5 – 6.0
Front brake hose union bolt	1.3 – 1.8	9.5 – 13.0
Front brake air bleeder bolt	0.6 – 0.9	4.5 – 6.5
Rear brake caliper mounting bolt	2.0 – 3.0	14.5 – 21.5
Rear brake caliper axle bolt	2.5 – 3.5	18.0 – 25.5
Rear brake master cylinder mounting bolt	1.5 – 2.5	11.0 – 18.0

TIGHTENING TORQUE CHART

For other bolts and nuts not listed, refer to this chart:

Bolt Diameter	Conventional or "4" marked bolt		"7" marked bolt	
Ⓐ (mm)	kg-m	lb-ft	kg-m	lb-ft
4	0.1 – 0.2	0.7 – 1.5	0.15 – 0.3	1.0 – 2.0
5	0.2 – 0.4	1.5 – 3.0	0.3 – 0.6	2.0 – 4.5
6	0.4 – 0.7	3.0 – 5.0	0.8 – 1.2	6.0 – 8.5
8	1.0 – 1.6	7.0 – 11.5	1.8 – 2.8	13.0 – 20.0
10	2.2 – 3.5	16.0 – 25.5	4.0 – 6.0	29.0 – 43.5
12	3.5 – 5.5	25.5 – 40.0	7.0 – 10.0	50.5 – 72.5
14	5.0 – 8.0	36.0 – 58.0	11.0 – 16.0	79.5 – 115.5
16	8.0 – 13.0	58.0 – 94.0	17.0 – 25.0	123.0 – 181.0
18	13.0 – 19.0	94.0 – 137.5	20.0 – 28.0	144.5 – 202.5

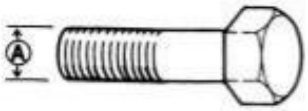

Conventional bolt

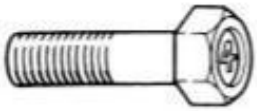

"4" Marked bolt

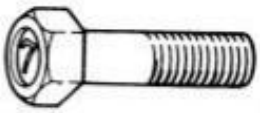

"7" Marked bolt

SPECIAL MATERIALS (For U.S.A.)

The materials listed below are needed for maintenance work on the GS550M, and should be kept on hand for ready use. They supplement such standard materials as cleaning fluids, lubricants, emery cloth and the like. How to use them and where to use them are described in the text of this manual.

Material	Part
 99000-32040 THREAD LOCK CEMENT	* Carburetor bracket screw . . . . . 8 pcs. * Oil filter cap nut . . . . . 3 pcs. * Front fork damper rod bolt . . . . . 2 pcs. * Cam shaft end cap screw . . . . . 8 pcs.
 99104-32050 THREAD LOCK "1363C"	* Generator lead wire guide screw . . . . . 3 pcs. * Generator stator securing screw . . . . . 3 pcs. * Gearshift cam stopper bolt . . . . . 2 pcs. * Countershaft bearing retainer . . . . . 4 pcs. * Starter motor securing bolt . . . . . 2 pcs. * Gearshift fork shaft stopper screw . . . . . 1 pc. * Engine oil pump set screw . . . . . 4 pcs.
 99104-32020 THREAD LOCK SUPER "1361A"	* Gearshift cam retainer screw . . . . . 1 pc. * Cam chain sprocket allen bolt . . . . . 2 pcs. * Cam chain guide bolt . . . . . 1 pc. * Starter clutch allen bolt . . . . . 3 pcs. * Gearshift stopper . . . . . 1 pc.
 99104-32090 THREAD LOCK SUPER "1332B"	* Generator rotor securing bolt . . . . . 1 pc.
 99104-32030 THREAD LOCK SUPER "1363A"	* Camshaft sprocket bolt . . . . . 4 pcs.

Material	Part
 99000-25030 SUZUKI SUPER GREASE "A"	• Oil seals • Throttle grip • Cables (speedometer and tachometer) • Clutch release mechanism • Gearshift lever linkage and shaft • Speedometer gearbox • Wheel bearings • Swinging arm bearing and dust seal • Brake pedal shaft • Governor link • Centerstand spacer • Steering stem bearings
 99104-31110 SUZUKI BOND No. 1215	• Mating surfaces of upper and lower crankcase. • Front fork damper rod bolt.
 99000-25100 SUZUKI SILICONE GREASE	• Apply to caliper axle bolt
 99000-25140 SUZUKI MOLY PASTE	• Valve stem • Cam shaft • Chain tensioner adjuster shaft

USE OF GENUINE SUZUKI PARTS

To replace any part of the machine, use a genuine SUZUKI replacement part. Imitation parts or parts supplied from any other source than SUZUKI, if used to replace SUZUKI parts can reduce the machine's performance and, even worse, could induce costly mechanical troubles.

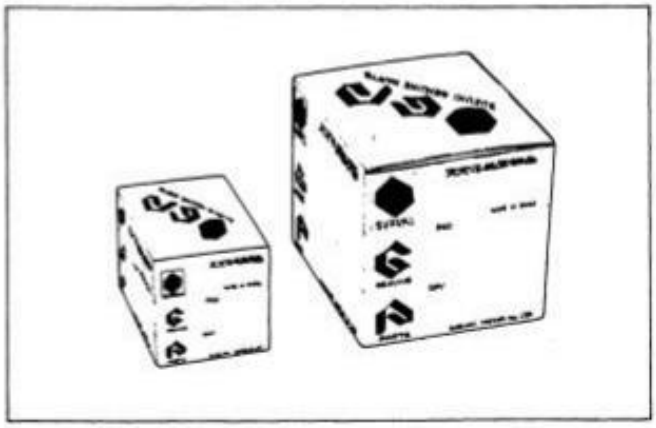

For CANADA

The materials listed below are needed for maintenance work on the GS550M, and should be kept on hand for ready use. They supplement such standard materials as cleaning fluids, lubricants, emery cloth and the like. How to use them and where to use them are described in the text of this manual.

Material	Part
 99000-32040 THREAD LOCK CEMENT	* Carburetor bracket screw . . . . . 8 pcs. * Oil filter cap nut . . . . . 3 pcs. * Front fork damper rod bolt . . . . . 2 pcs. * Cam shaft end cap screw . . . . . 8 pcs.
 99000-32050 THREAD LOCK "1342"	* Generator lead wire guide screw . . . . . 3 pcs. * Generator stator securing screw . . . . . 3 pcs. * Gearshift cam stopper bolt . . . . . 2 pcs. * Countershaft bearing retainer . . . . . 4 pcs. * Starter motor securing bolt . . . . . 2 pcs. * Gearshift fork shaft stopper screw . . . . . 1 pc. * Engine oil pump set screw . . . . . 4 pcs.
 99000-32020 THREAD LOCK SUPER "1333B"	* Gearshift cam retainer screw . . . . . 1 pc. * Cam chain sprocket allen bolt . . . . . 2 pcs. * Cam chain guide bolt . . . . . 1 pc. * Starter clutch allen bolt . . . . . 3 pcs. * Gearshift stopper . . . . . 1 pc.
 99000-32090 THREAD LOCK SUPER "1332B"	* Generator rotor securing bolt . . . . . 1 pc.
 99000-32030 THREAD LOCK SUPER "1303B"	* Camshaft sprocket bolt . . . . . 4 pcs.

Material	Part
 99000-25010 SUZUKI SUPER GREASE "A"	• Oil seals • Throttle grip • Cables (speedometer and tachometer) • Clutch release mechanism • Gearshift lever linkage and shaft • Speedometer gearbox • Wheel bearings • Swinging arm bearing and dust seal • Brake pedal shaft • Governor link • Centerstand spacer • Steering stem bearings
 99000-31030 SUZUKI BOND No. 4	• Mating surfaces of upper and lower crankcase. • Front fork damper rod bolt.
 99000-25100 SUZUKI SILICONE GREASE	• Apply to caliper axle bolt
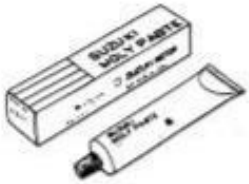 99000-25140 SUZUKI MOLY PASTE	• Valve stem • Cam shaft • Chain tensioner adjuster shaft

USE OF GENUINE SUZUKI PARTS

To replace any part of the machine, use a genuine SUZUKI replacement part. Imitation parts or parts supplied from any other source than SUZUKI, if used to replace SUZUKI parts can reduce the machine's performance and, even worse, could induce costly mechanical troubles.

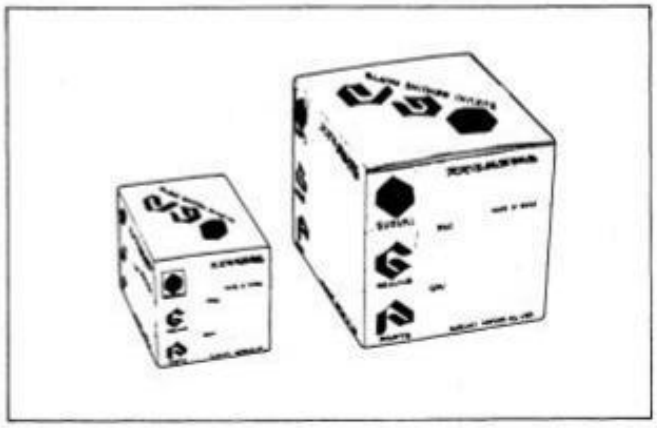

PERIODIC MAINTENANCE (For U.S.A.)

IMPORTANT: The periodic maintenance intervals and service requirements have been established in accordance with EPA regulations. Following these instructions will ensure that the motorcycle will not exceed emission standards and it will also enhance the reliability and performance of the motorcycle.

NOTE:
Vehicles operated under severe conditions may require more frequent servicing.

The chart below lists the recommended intervals for all the required periodic service work necessary to keep the motorcycle operating at peak performance and to maintain proper emission levels. Mileages are expressed in terms of kilometers, miles and time for your convenience.

PERIODIC MAINTENANCE SCHEDULE

INTERVAL: THIS INTERVAL SHOULD BE JUDGED BY ODOMETER READING OR MONTHS WHICHEVER COMES FIRST	Mile	600	4 000	7 500	11 000	15 000
	Km	1 000	6 000	12 000	18 000	24 000
	Month	2	12	24	36	48
Battery (specific gravity of electrolyte)		–	I	I	I	I
Cylinder head nuts and exhaust pipe bolts		T	T	T	T	T
Air cleaner element		–	C	C	C	C
Tappet clearance		I	I	I	I	I
Spark plugs		–	C	R	C	R
Fuel line		Replace every two years				
Engine oil and oil filter		R	R	R	R	R
Carburetor idle r/min		I	I	I	I	I
Clutch		I	I	I	I	I
Drive chain		I	I	I	I	I
		Clean and lubricate every 600 miles (1 000 km)				
Brake hose		Replace every two years				
Brake		I	I	I	I	I
Tires		I	I	I	I	I
Steering stem		I	I	I	I	I
Front fork		–	–	I	–	I
		Check air pressure every 6 months				
Chassis bolts and nuts		T	T	T	T	T

NOTE: T = Tighten, I = Inspect, R = Replace, C = Clean

For CANADA

The chart below lists the recommended intervals for all the required periodic service work necessary to keep the motorcycle operating at peak performance and economy. Mileages are expressed in terms of kilometers.

NOTE:
More frequent servicing may be performed on motorcycles that are used under severe conditions.

PERIODIC MAINTENANCE CHART

ENGINE

Item \ Interval	Initial 1 000 km	Every 5 000 km	Every 10 000 km
Air cleaner	Clean every 3 000 km		
Battery	Inspect	Inspect	–
Engine bolts and nuts	Inspect	Inspect	–
Tappet clearance	Inspect	Inspect	–
Compression	Inspect	Inspect	–
Spark plug	Inspect	Inspect	Replace
Ignition timing	Inspect	Inspect	–
Carburetor	Inspect	Inspect	–
Fuel lines	Inspect	Inspect	–
	Replace every 4 years		
Engine oil	Change	Change	–
Engine oil filter	Replace	Replace	–
Oil pressure	–	Inspect	–
Oil sump filter	–	–	Clean
Clutch	Inspect	Inspect	–

CHASSIS

Item \ Interval	Initial 1 000 km	Every 5 000 km	Every 10 000 km
Brakes	Inspect	Inspect	–
Brake hose	Inspect	Inspect	–
	Replace every 4 years		
Brake fluid	Change every 2 years		
Tires	Inspect	Inspect	–
Steering	Inspect	Inspect	–
Front fork oil	Change	–	Change
	Check air pressure every 6 months		

LUBRICATION CHART

The maintenance schedule, which follows, is based on this philosophy. It is timed by odometer indication, and is calculated to achieve the ultimate goal of motorcycle maintenance in the most economical manner.

Interval / Item	Initial and every 5 000 km	Every 10 000 km
Governor link	–	Grease
Throttle cable	Motor oil	–
Throttle grip	–	Grease
Clutch cable	Motor oil	–
Starter cable	Motor oil	–
Speedometer cable	–	Grease
Tachometer cable	–	Grease
Brake pedal	Grease or oil	–
Brake lever	–	Grease or oil
Clutch lever	–	Grease or oil
Steering stem bearings	Grease every 2 years or 20 000 km	
Swinging arm bearings		

Lubricate exposed parts which are subject to rust, with either motor oil or grease whenever the motorcycle has been operated under wet or rainy conditions.

Before lubricating each part, clean off any rusty spots and wipe off any grease, oil, dirt or grime.

WIRE AND CABLE ROUTING

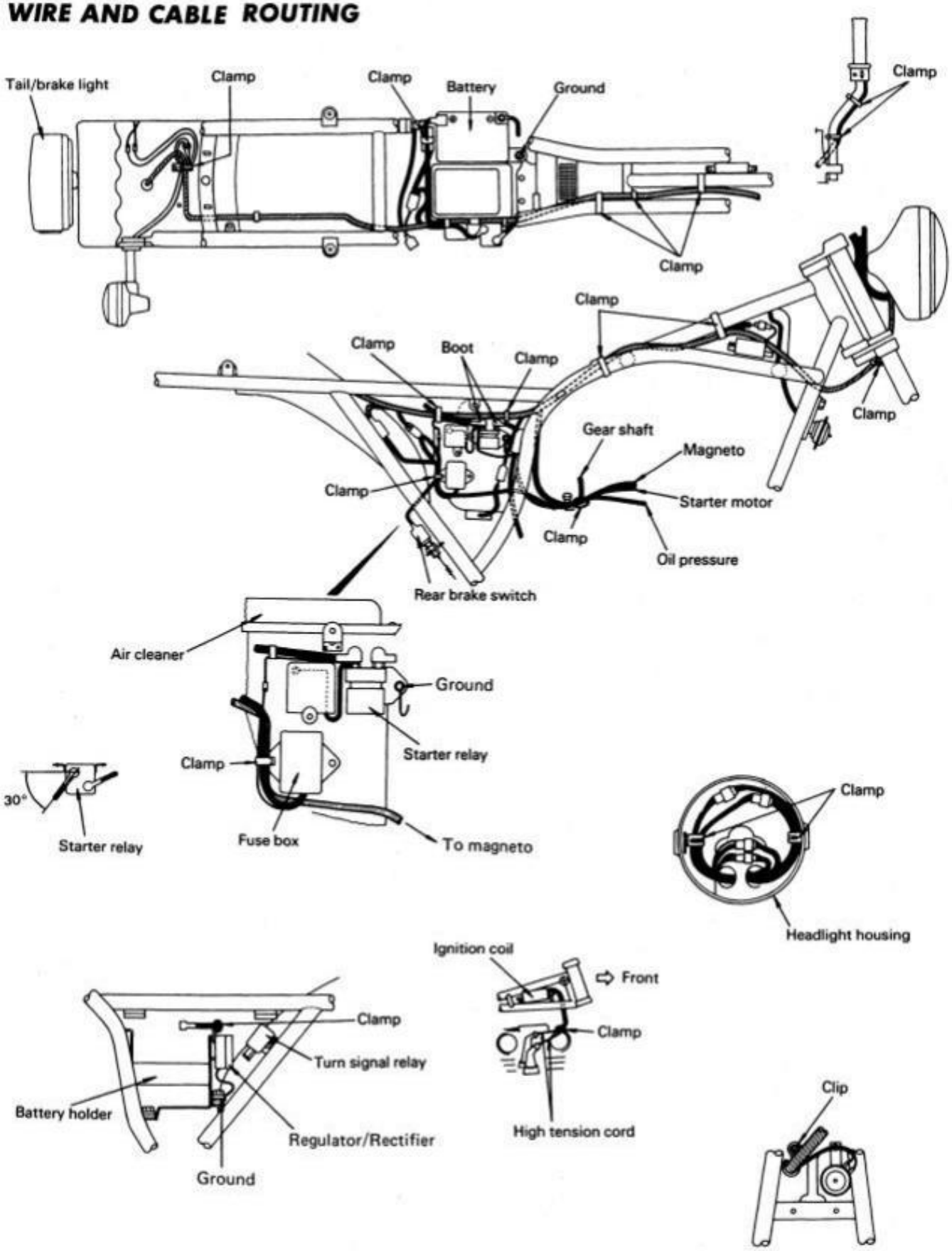

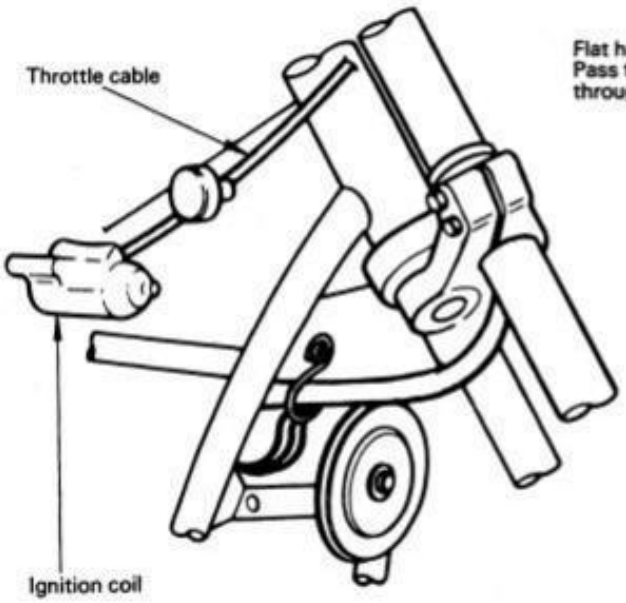
Throttle cable
Ignition coil

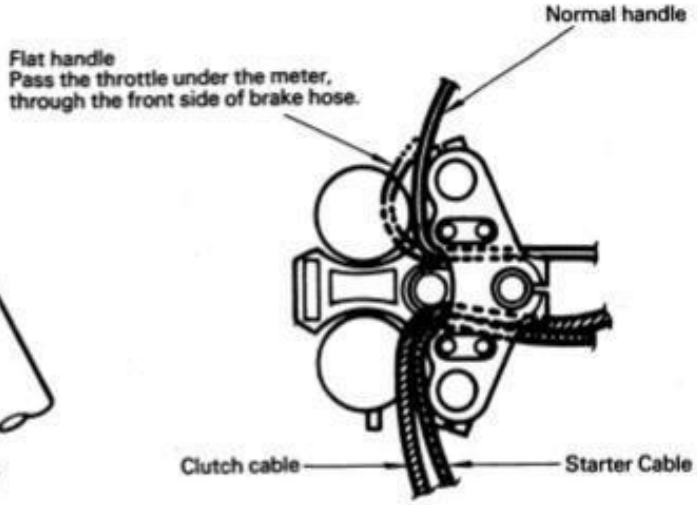
Normal handle
Flat handle
Pass the throttle under the meter,
through the front side of brake hose.
Clutch cable
Starter Cable

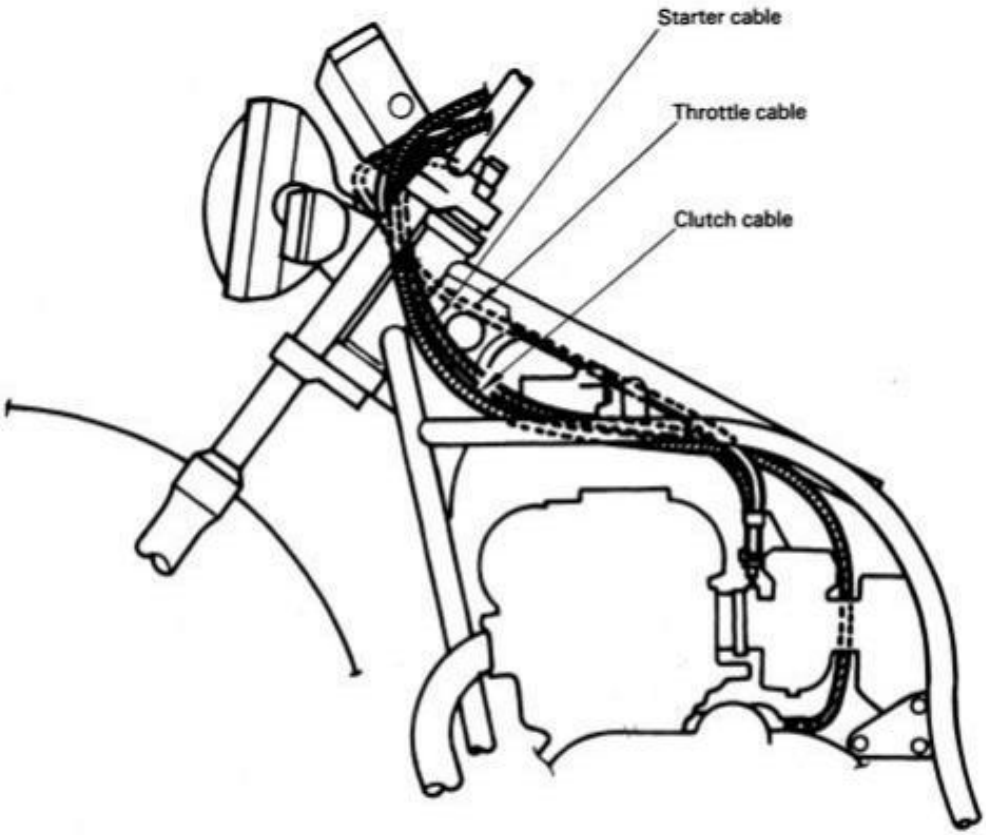
Starter cable
Throttle cable
Clutch cable

WIRING DIAGRAM

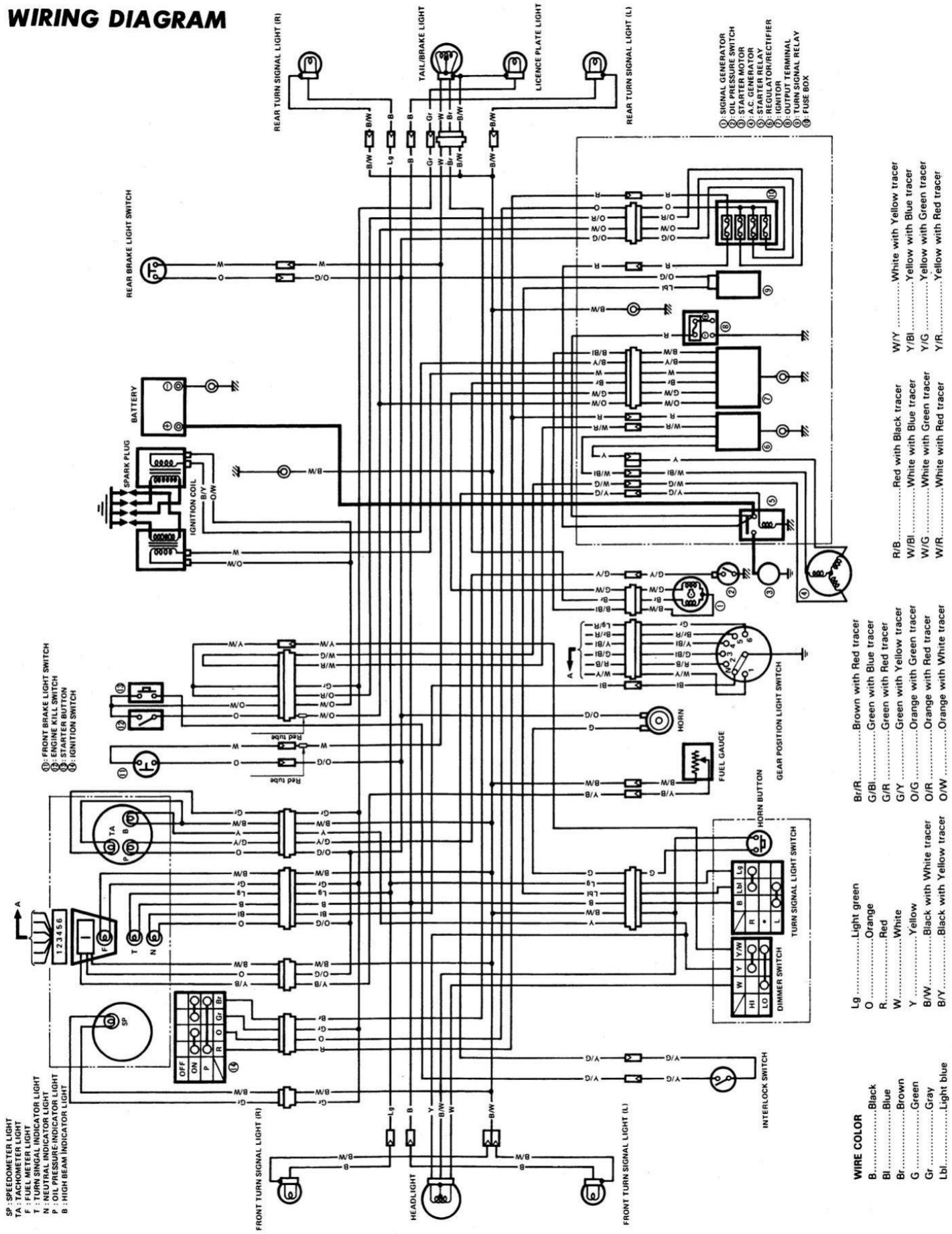

Prepared by

SUZUKI MOTOR CORPORATION

Motorcycle Technical Service Department

7th Ed. October, 1990
1st Ed. January, 1977

Manual No. 99500-35003-01E

Printed in Japan

SUZUKI MOTOR CORPORATION

Printed in Japan C