TABLE OF CONTENTS

HOW TO USE THIS BOOK

The GL 1000 Shop Manual is divided into 18 sections.

To find information, locate the vehicle system on this page and use the colored index tabs at the edge of the pages to locate that section of the book.

Each section includes the specifications, torque values, working practices, tools, materials, and service procedures for that system.

The first page of each section has a Table of Contents that gives page references within the section.

SPECIAL NOTES

NOTE provides special information for more efficient and convenient servicing.

NOTE
This manual contains information for several model years. You may notice some minor appearance differences from your motorcycle.

1	SERVICE INFORMATION	1
2	MAINTENANCE OPERATIONS	2
3	TUNE-UP	3
4	ENGINE REMOVAL & INSTALLATION	4
5	ENGINE TOP END REPAIR	5
6	ENGINE LOWER END REPAIR	6
7	LUBRICATION SYSTEM	7
8	COOLING SYSTEM	8
9	FUEL SYSTEM	9
10	CLUTCH	10
11	TRANSMISSION	11
12	FINAL DRIVE	12
13	FRAME AND SUSPENSION	13
14	BRAKES AND WHEEL ASSEMBLIES	14
15	ELECTRIC STARTER	15
16	IGNITION	16
17	LIGHTS, SWITCHES, AND INSTRUMENTS	17
18	BATTERY AND CHARGING SYSTEM	18

GL-1000 SHOP MANUAL
© 1978 American Honda Motor Co., Inc.
Printed in U.S.A. 7-78

1 SERVICE INFORMATION

1

VEHICLE SERIAL NUMBERS 1-2
NPS PART NUMBERS 1-3
METRIC CONVERSIONS 1-4
WORKING PRACTICE 1-5
SERVICE PARTS 1-6
TOOLS AND MATERIALS 1-8
GENERAL SPECIFICATIONS 1-17

© 1976 American Honda Motor Co., Inc.
Printed in U.S.A. 7-78

VEHICLE SERIAL NUMBERS

The frame serial number is stamped on the right side of the steering head.

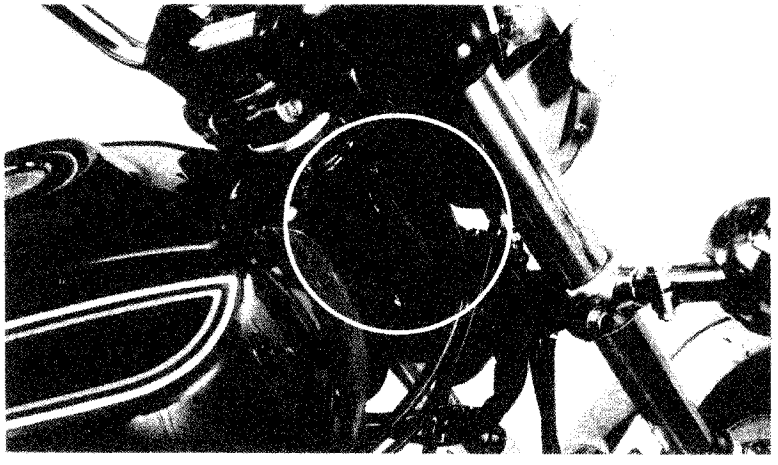

The engine serial number is stamped on top of the right side of the crankcase.

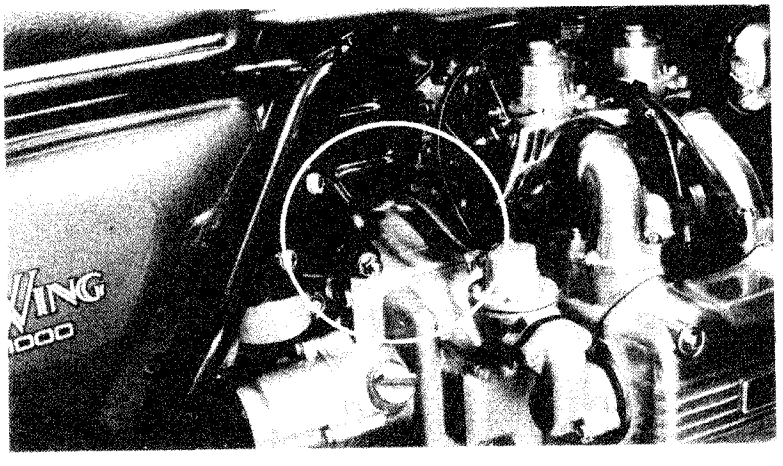

The carburetor identification number is located on the top of the carburetor mounting flange.

CARBURETOR IDENTIFICATION NUMBER

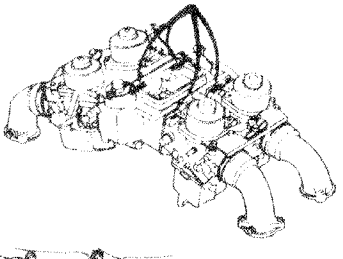

The final drive serial number is located on the left side of the final drive case, near the pinion flange.

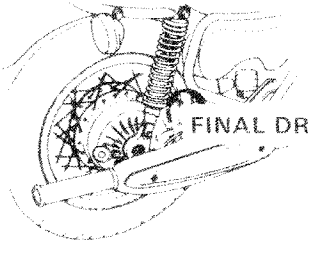

FINAL DRIVE SERIAL NUMBER

© 1978 American Honda Motor Co., Inc.
Printed in U.S.A. 7-78

SERVICE INFORMATION
NPS PART NUMBERS

Honda N.P.S. numbers contain significant information about the parts they represent. The following examples illustrate the three basic types of N.P.S. numbers.

Standard Numbers (Common items)

"6 x 42 Hex Bolt	92120-060420Z"
Function Number	92
Method of Manufacture	1
Length of thread	20-
Nominal Diameter	06
Length under the head	042
Material	0
Surface Treatment	Z

Semi-Standard Numbers (seals, o-rings, bearings, etc.)

"FRONT WHEEL DUST SEAL	91251-300-003"
Function	91
Type	2
Detail Number	51-
Product Number (where first used)	300-
Classification	00
Manufacturer	3

Special Numbers (Non-interchangeable parts)

"LEFT SIDE COVER	83700-371-305ZA"
Function	83
Component	700-
Product	371-
Classification	305
Color Code	ZA

© 1976 American Honda Motor Co., Inc.
Printed in U.S.A. 7-78

METRIC CONVERSIONS

The primary system of measurement in this manual is the metric system; U.S. customary units will be given in parentheses.

If it is necessary to convert from metric to English equivalents, use the following conversion factors:

GIVEN	MULTIPLY BY	TO OBTAIN
Torque:		
Kilogram-meter (kg-m)	7.233	Foot pounds (ft-lb)
Kilogram-centimeter (kg-cm)	0.8696	Inch pounds (in-lb)
Foot pounds (ft-lb)	0.1383	Kilogram meter (kg-m)
Inch pounds (in-lb)	1.15	Kilogram-centimeter (kg-cm)
Length:		
Meter (m)	3.281	Feet (ft)
Millimeter (mm)	0.0393	Inches (in)
Feet (ft)	0.3048	Meter (m)
Inches (in)	25.40	Millimeter (mm)
Kilometer (km)	0.6214	Mile (mi)
Mile (mi)	1.609	Kilometer (km)
Pressure:		
Kilogram/Sq. centimeter (kg-cm^2)	14.22	Pounds/Sq. inch (psi)
Pounds/Sq. inch (psi)	0.0703	Kilogram/Sq. centimeter(kg-cm^2)
Temperature:		
Centigrade (C°)	$C^o \times \frac{9}{5} + 32$	Fahrenheit (F°)
Fahrenheit (F°)	$F^o - 32 \times \frac{5}{9}$	Centigrade (C°)
Capacity:		
Liter (l)	0.2642	Gallon (gal)
Liter (l)	1.0568	Quart (qt)
Quart (qt)	0.9463	Liter (l)
Gallon (gal)	3.785	Liter (l)
Volume:		
Cubic centimeter (cc)	0.061	Cubic inches (cu in)
Cubic inches (cu in)	16.39	Cubic centimeters (cc)
Weight:		
Kilogram (kg)	2.205	Pounds (lb)
Gram (g)	0.03527	Ounces (oz)
Pounds (lb)	0.4536	Kilogram (kg)
Ounces (oz)	28.3495	Gram(g)
Speed:		
Kilometer/hour (km/hr)	0.6214	Miles/hour (mph)
Miles/hour (mph)	1.609	Kilometer/hour (km/hr)

© 1976 American Honda Motor Co., Inc.
Printed in U.S.A. 7-78

WORKING PRACTICE

SERVICE PLANNING

Proper planning will help expedite service on the GL 1000. Due to the hot coolant in the engine; this motorcycle may require a longer cooling down period than previous Honda models. After verifying any customer complaints on the work order, the technician should first accelerate the cool down.

If the motorcycle is in for a tune-up and service as called for in the maintenance schedule for 6000 mile intervals, the first operations should be to drain the hot engine oil, and remove the valve covers allowing the hot air to escape. Use of a cooling fan as used for other models will only help slightly due to the engine design and layout in the frame. While the oil is draining, draw the parts and lubricants from stock and lay out the required tools.

Before performing maintenance on the GL 1000, the technician should first become familiar with the tools listed in this section. New tools required to maintain this motorcycle are in bold face type and these special tools are required for many operations. If customer complaints are described on the work order and they are unfamiliar, refer to the troubleshooting sections of this manual.

GENERAL SERVICE PRECAUTIONS:

1. Always replace gaskets, o-rings, and cotter pins with new ones. When assembling make sure the seals are installed correctly and snap rings are seated into their grooves.
2. When tightening nuts and bolts, start with the larger, or center ones first. Tighten them to the specified torque using a criss-cross pattern.
3. Use genuine Honda parts and recommended lubricants.
4. Use all special tools where required.
5. When engine and final drive components are disassembled and inspected, coat the mating surfaces with lubricant to prevent corrosion.
6. When reassembling components use the proper assembly lubricants.

© 1976 American Honda Motor Co., Inc.
Printed in U.S.A. 7-78

SERVICE PARTS

O-RINGS

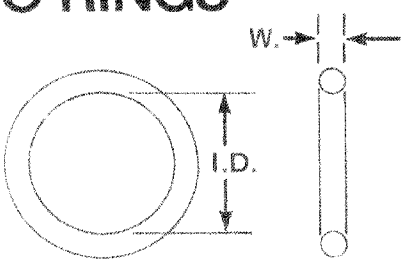

LOCATION	ID x W	(QUANTITY)
Cylinder Head Assembly	6.5 x 1.5 mm oil orifice	(1 per side)
	4.1 x 1.5 mm oil orifice	(1 per side)
Water Lines	21.9 x 2.3	(4)
	12.5 x 2.2	(1)
	13.5 x 1.4	(1)
	15.5 x 1.4	(1)
Front Cover	21.9 x 2.3	(2)
Water Pump	37.2 x 2.3	(1)
	46 x 2	(1)
	56 x 2.4	(1)
Oil Filter	15 x 2.5	(1)
	89 x 4.5	(1)
Oil Pump	17.0 x 2.5	(1)
	29 x 2.2	(1)
Scavenge Pump	33.5 x 3	(1)
Rear Case	30.8 x 3.2	(1)
Clutch Adjuster	5.2 x 4	(1)
Starter	42.5 x 2	(1)
Alternator Wires	23 x 2	(1)
Cylinder Block	9.5 x 1.7	(1)
Neutral Switch	18 x 3	(1)
Oil Filler Cap	27 x 2.7	(1)
Timing Plug	26 x 2.2	(1)
Dowel	17.0 x 2.5	(1)
Dowel	8 x 1.9	(1)
Intake Manifold	40 x 2.6	(4)
Radiator Tank	15 x 2.5	(1)
Fork Nut	28 x 2.3	(2)
Master Cylinders	45 x 2.4	(2)
Rear Wheel	63 x 3.0	(1)
Final Drive Assembly	30.8 x 3.2	(1)
	20.8 x 2	(1)
	96.5 x 2	(1)

© 1976 American Honda Motor Co., Inc.
Printed in U.S.A. 7-78

SERVICE INFORMATION
SERVICE PARTS

CIRCLIPS

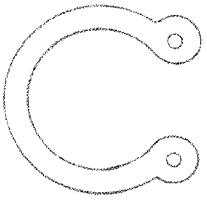

LOCATION	TYPE	DIA	(QUANTITY)
Starter-Overun Clutch	Internal	33 mm	(2)
Generator Shaft	External	28 mm	(1)
Transmission	External	25 mm	(5)
Drive Shaft	External	20 mm	(2)
Clutch	External	40 mm	(1)

OIL SEALS

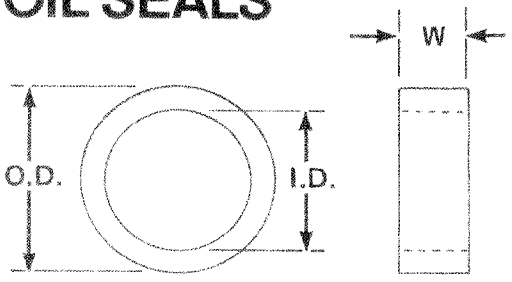

LOCATION	I.D. x O.D. x W.
Right Hand Cylinder Head	27 x 43 x 9
Left Hand Cylinder Head	27 x 43 x 9
Tachometer Drive	4.8 x 14 x 5.4
Oil Pump	10 x 25 x 7
Scavenge Pump	11 x 15 x 3
Clutch Cover	14 x 24 x 5
Rear Case	25 x 54 x 7
	25 x 54 x 7
	18 x 29 x 7
Left Case	14 x 28 x 7
Crankshaft	35 x 55 x 8
Front Fork	37 x 48 x 11
Final Drive Assembly	32 x 67 x 8
	35 x 52 x 8
	70 x 90 x 8

DUST SEALS

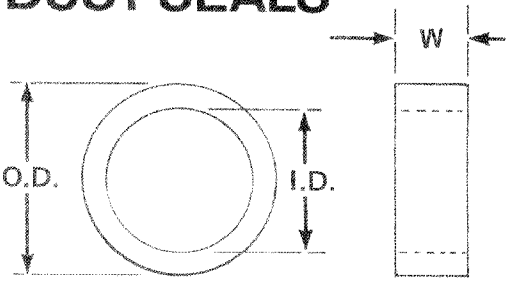

LOCATION	I.D. x O.D. x W.
Front Wheel	22 x 36 x 8
Rear Wheel	30 x 45 x 9.5
Swing Arm	25 x 46 x 10.5

© 1976 American Honda Motor Co., Inc.
Printed in U.S.A. 7-78

TOOLS AND MATERIALS

NOTE

Tool numbers whose second number-group begins with -371 (as in 07900-3710100) are tools newly provided for the GL 1000. Tools from series other than -371 are tools previously developed for other models.

MECHANIC'S HAND TOOLS

The Mechanic's Hand Tools listed here can be obtained locally.

TOOL NAME AND DESCRIPTION	TOOL NAME AND DESCRIPTION	TOOL NAME AND DESCRIPTION
Tire Pressure Gauge	Wrench 5.5x7mm Open End	Wrench 21x23mm Offset Box
Compression Gauge	Wrench 6x8mm Open End	Screw Driver 200mm Plastic Handle
Allen Wrench Set 6-10mm	Wrench 8x9mm Open End	Screw Driver Stubby
Wrench 8mm Socket	Wrench 10x12mm Open End	Screw Driver 100mm Wood Handle
Wrench 9mm Socket	Wrench 10x14mm Open End	Screw Driver 150mm Wood Handle
Wrench 10mm Socket	Wrench 17x19mm Open End	Screw Driver No. 2 Phillips Head
Wrench 12mm Socket	Wrench 11x13mm Open End (ISO)	Pliers External Snap Ring
Wrench 14mm Socket	Wrench 19x22mm Open End (ISO)	Pliers Internal Snap Ring
Wrench 17mm Socket	Wrench 24x27mm Open End (ISO)	Pliers Common
Wrench 19mm Socket	Wrench 10x12mm Offset Box	Pliers Long Nose Cutting
Wrench 22mm Socket	Wrench 12x14mm Offset Box	Brush Wire
Wrench 24mm Socket	Wrench 14x17mm Offset Box	Hammer 1 lb. Plastic
Wrench 27mm Socket	Wrench 17x19mm Offset Box	Driver Set Hammer

© 1976 American Honda Motor Co., Inc.
Printed in U.S.A. 7-78

SERVICE INFORMATION
TOOLS AND MATERIALS

SHOP TOOLS

HONDA CODE	TOOL NUMBER	TOOL NAME AND DESCRIPTION
LOCAL PURCHASE		Glaze Breaker Hone
LOCAL PURCHASE		3/8 Inch Drill Motor
LOCAL PURCHASE		3/8 Inch Drill Index
LOCAL PURCHASE		3/8 Inch Drive Air Wrench
LOCAL PURCHASE		3/8 Inch Impact Sockets - 9-19mm
LOCAL PURCHASE		1/2 Inch Impact Sockets - 11-27mm
LOCAL PURCHASE		Torque Wrench kg-cm = ft-lb 0-150
LOCAL PURCHASE		Torque Wrench kg-cm = in-lb 0-300
LOCAL PURCHASE		Timing Light
LOCAL PURCHASE		Volt-Ohm Meter
LOCAL PURCHASE		Continuity Tester
LOCAL PURCHASE		Amp Meter
LOCAL PURCHASE		Soldering Iron
LOCAL PURCHASE		Cylinder Leak Tester
40047	M976X-023-XXXXX	Oil Drain Container
41033	M988X-525-XXXXX	Tester - Cooling System
LOCAL PURCHASE		Battery Hydrometer
LOCAL PURCHASE		Wheel Alignment Fixture
LOCAL PURCHASE		Gasoline Container Safety Spring Lock Cap Type
LOCAL PURCHASE		Plastic Two Gallon Container (Anti-Freeze)
LOCAL PURCHASE		Funnel - Auto Trans Type
LOCAL PURCHASE		Electric Hot Plate
LOCAL PURCHASE		Battery Acid Container
LOCAL PURCHASE		Battery Charger

© 1978 American Honda Motor Co., Inc.
Printed in U.S.A. 7-78

HONDA CODE	TOOL NUMBER	TOOL NAME AND DESCRIPTION
47978	M937A-021-XXXXX	Vacuum Gauge Kit
23892	07401-0010000	Float Level Gauge
26250	07908-3230000	Tappet Adjustment Wrench
40953	07957-3290000	Valve Lifter
06279	07614-0050100	Clipper Gas Line (2 pcs.)

HEAVY SHOP TOOLS

LOCAL PURCHASE		Parts Washing Tank
LOCAL PURCHASE		Hydraulic Press
LOCAL PURCHASE		Boring Bar
LOCAL PURCHASE		Vise
LOCAL PURCHASE		Work Bench
LOCAL PURCHASE		Air Compressor
LOCAL PURCHASE		Motorcycle Lift
42390	M977E-350-XXXXX	Engine Adapter Stand
LOCAL PURCHASE		Bench Grinder
40046	M975A-023-XXXXX	Engine Removal Stand
64431	M9259-999-64431	Engine Stand Mobile Base

PRECISION INSPECTION TOOLS

LOCAL PURCHASE		Hole Gauge
LOCAL PURCHASE		Spring Pressure Tester
LOCAL PURCHASE		Spring Pull Scale - grams = ounces
11884	07343-0030000	Cylinder Gauge Set 35-80mm
25240	07345-0020000	Magnetic Stand
41291	07140-99914	V-Block 5 Inch (2 pcs.)
06241	07303-0010000	Feeler Gauge 0.03 - 1.00mm
LOCAL PURCHASE		Feeler Gauge 0.04 - 0.30mm
20657	07340-0020000	Vernier Caliper 0-200mm

© 1978 American Honda Motor Co., Inc.
Printed in U.S.A. 7-78

SERVICE INFORMATION
TOOLS AND MATERIALS

SPECIAL ASSEMBLY/ DISASSEMBLY TOOLS

HONDA CODE	TOOL NUMBER	TOOL NAME AND DESCRIPTION
11885	07341-0010000	Micrometer 0-25mm
11886	07341-0020000	Micrometer 25-50mm
LOCAL PURCHASE		Micrometer 50-75mm
Drivers and Pilots		
47883	07945-3710100	Driver A, Bearing 6007 Clutch outer and AC generator bearing
41317	07945-3710200	Driver B, Bearing 6205 Main Shaft
41318	07945-3710300	Driver C, Bearing 6007 For ring gear shaft bearing and oil seal
41321	07946-3710200	Driver Attachment B, Bearing 6304 Use with handle 41328/07949-3710000
41322	07946-3710300	Driver Attachment C, Bearing For fork pivot needle bearing Use with handle 41328/07949-3710000
41324	07947-3710100	Driver Fork Seal
41325	07947-3710200	Driver, Oil Seal, 67mm OD For pinion gear shaft oil seal (size 32x67x8mm)
41332	07965-3710100	Driver, Ring Gear Bearing and Oil Seal (Tool A) Contained in Set 07965-3710000
48721	07942-6110000	Valve Guide Remover and Installer
64768	07946-3710600	Bearing Driver Upper and lower steering races and lower bearing
64766	07946-3710500	Race Removal Tool Lower Race
64767	07946-3710700	Race Installation Attachment, Upper and Lower Races
41328	07949-3710000	Handle Driver Attachment
29824	07949-6110000	Handle Driver Attachment
Holders		
41304	07923-3710000	Holder, Clutch Center Use with wrench 41303/07916-3710000
41305	07924-3710000	Holder, Pinion Gear For pinion gear pre-load inspection
41306	07925-3710100	Holder AC Generator Rotor
41307	07925-3710200	Holder Timing Pulley

© 1978 American Honda Motor Co., Inc.
Printed in U.S.A. 7-78

HONDA CODE	TOOL NUMBER	TOOL NAME AND DESCRIPTION
Pullers		
41308	07934-3710100	Puller Clutch Outer
41309	07934-3710200	Puller, AC Generator Rotor Use with holder 41306/07925-3710100
48429	07936-3710000	Remover Set, Bearings 6204 and 6304 20mm Inner Race
41311	07936-3710600	Handle, Remover
41312	07936-3710200	Weight, Sliding
41313	07936-3710300	Remover, Bearing, 17mm Inner Race Use with handle and weight 41311/07936-3710100 and 41312/07936-3710200, respectively
41314	07936-3710400	Remover, Bearing, 35mm Inner Race Use with handle and weight 41311/07936-3710100 and 41312/07936-3710200, respectively
41315	07930-3710500	Remover, Rear Fork Pivot Bushing Use with handle and weight 41311/07936-3710100 and 41312/07936-3710200, respectively
41319	07945-3710400	Remover, Bearing Fork pivot needle bearing remover
41326	07948-3710100	Remover A, Oil Seal, 48mm OD For front fork seal (size 37x48x11mm)
41327	07948-3710200	Remover B, Oil Seal For pinion gear shaft seal Use with handle and weight 41311/07936-3710100 and 41312/07936-3710200, respectiviely
Piston and Crankcase Tools		
41329	07958-3710000	Piston Base (Set of two)
57307	07973-6570000	Assembly/Disassembly Tool Set Piston Pin
LOCAL PURCHASE		Piston Ring Compressor Ratchet Type (2 1/8 - 5 in)

© 1978 American Honda Motor Co., Inc.
Printed in U.S.A. 7-78

SERVICE INFORMATION
TOOLS AND MATERIALS

HONDA CODE	TOOL NUMBER	TOOL NAME AND DESCRIPTION
Pliers		
41302	07914-5670100	Circlip Pliers External For assembly and disassembly of drive shaft
Reamers		
48726	07984-6110000	Reamer Valve Guide
Spring Compressors		
41331	07964-3710000	Spring Compressor Set, Torque Damper For assembly and disassembly of AC generator shaft and drive shaft damper
Timing Tools		
63068	07999-3710000	Timing Inspection Plug
Wrenches and Spanners		
41301	07910-3710000	Wrench Final Retainer
41303	07916-3710000	Wrench 16mm socket for assembling and disassembling clutch
61076	07920-6340001	Wrench, Lock, 50mm For fuel unit disassembling
LOCAL PURCHASE		Hollow Wrench Set
06155	07902-0010000	36mm Pin Spanner
64765	07916-3710100	Steering Stem Socket
37828	07908-3690000	Carb. Adj. Wrench

© 1978 American Honda Motor Co., Inc.
Printed in U.S.A. 7-78

SPECIAL REPAIR TOOLS

HONDA CODE	TOOL NUMBER	TOOL NAME AND DESCRIPTION
06283	07685-0030200	Handle 25mm Die
08286	07685-0030300	Handle 38mm Die
06230	07687-0010000	Tap Set 5-6-8mm
06236	07688-0011500	Die 8x1.25mm (25mm OD)
LOCAL PURCHASE		Die 10x1.25mm (25mm OD)
LOCAL PURCHASE		Die 10x1.5mm (25mm OD)
LOCAL PURCHASE		Die 12x1.2mm (25mm OD)
LOCAL PURCHASE		Die 12x1.5mm (25mm OD)
LOCAL PURCHASE		Die 12x1.75mm (25mm OD)
LOCAL PURCHASE		Die 14x1.5mm (38mm OD)
LOCAL PURCHASE		Die 14x2.0mm (38mm OD)
LOCAL PURCHASE		Die 5-6-8mm
06193	07689-0030000	Helisert Set 10mm Spark Plug
25243	07692-0010000	Terminal Kit
LOCAL PURCHASE		Valve Seat Grinder

© 1978 American Honda Motor Co., Inc.
Printed in U.S.A. 7-78

SERVICE INFORMATION
GENERAL SPECIFICATIONS

REPAIR MATERIALS

HONDA CODE	TOOL NUMBER	TOOL NAME AND DESCRIPTION
LOCAL PURCHASE		Three Bond #4 Sealer (Cylinder Head)
LOCAL PURCHASE		Three Bond #20 Sealer (Oil Pressure Switch)
LOCAL PURCHASE		Three Bond #2 Sealer (Temperature Switch, Thermostat)
LOCAL PURHCASE		Loctite (Alternator Clutch Screws) (Crankshaft Pulley) (Retainer Bolt)

LUBRICANTS

LOCAL PURCHASE		API GL-5 Hypoid Gear Oil (Drive Hub Assembly)
LOCAL PURCHASE		DOT #3 Brake Fluid (Brake Reservoirs)
LOCAL PURCHASE		Lubriplate Assembly Grease (Camshaft Bearings)
LOCAL PURCHASE		Molybdenum Disulfide (Cam Followers, Fuel Pump)
LOCAL PURCHASE		Molybdenum Disulfide (Cylinder Head Bolts)
LOCAL PURCHASE		Silicon Spray (Oil Seals)
LOCAL PURCHASE		Multipurpose Grease NLG1-2
LOCAL PURCHASE		Multipurpose Grease NLG1-2M
LOCAL PURCHASE		Automatic Transmission Fluid (Front Fork)
LOCAL PURCHASE		Ethylene Glycol Antifreeze
39419	M894X-278-100IL	Hondaline Oil 10W-40
41663	M893X-278-10ILX	Hondaline Oil 20W-50

© 1978 American Honda Motor Co., Inc.
Printed in U.S.A. 7-78

NOTE

This section includes specifications that are pertinent to the whole motorcycle.

For specifications which apply to specific vehicle systems, refer to the other sections of this manual.

DIMENSIONS

	1975 - 1977	1978	1979
Length Over All	2.305 m (90.8 in)	2.320 m (91.3 in)	←
Width Over All	0.875 m (34.4 in)	0.920 m (36.2 in)	←
Height Over All	1.225 m (48.2 in)	1.265 m (49.8 in)	1.255 m (48.6 in)
Wheel Base	1.545 m (60.9 in)	←	←
Seat Height	0.810 m (31.9 in)	←	←
Foot Peg Height	30.5 cm (12 in)	←	←
Ground Clearance	150 mm (5.9 in)	140 mm (5.5 in)	←
Dry Weight	265 kg (584 lbs)	273 kg (601 lbs)	274 kg (604 lbs)
Engine Weight	106.1 kg (234 lbs)	107 kg (236 lbs)	←
Engine Without Carburetion	97.7 kg (214 lbs)	←	←
Engine Without Exhaust System or Carburetion	85.7 kg (189 lbs)	←	←

ACCELERATION AND PASSING ABILITY

These figures indicate passing times and distances that can be met or exceeded by the Honda GL-1000 motorcycle.

The low-speed pass assumes an initial speed of 20 MPH and a limiting speed of 35 MPH. The high-speed pass assumes an initial speed of 50 MPH and a limit speed of 80 MPH.

NOTICE: The information presented represents results obtained by skilled drivers under controlled road and vehicle conditions, and the information may not be correct under other conditions.

SUMMARY TABLE.

Low-speed pass:
107.3 m (352 ft); 7.2 seconds — 32.2 km/hr-56.3 km/hr (20 mph-35 mph)

High-speed pass:
271.9 m (892 ft); 8.6 seconds — 80.5 km/hr-128.7 km/hr (50 mph-80 mph)

© 1978 American Honda Motor Co., Inc.
Printed in U.S.A. 7-78

VEHICLE
STOPPING DISTANCE

These figures indicate braking performance that can be met or exceeded by the Honda GL-1000 motorcycle, without locking the wheels under different conditions of loading. The information presented represents results obtained by skilled drivers under controlled road and vehicle conditions, and the information may not be correct under other conditions.

Stopping Distance from 60 mph

Light Load	49.3 m (162 ft)
Maximum Load	53.3 m (175 ft)

Vehicle Capacity Load Limit

163 kg (360 lbs)

Cold tire pressures

Up to 90.7 kg (200 lb) load
- Front: 2.0 kg-cm^2 (28 psi)
- Rear: 2.25 kg-cm^2 (32 psi)

Up to Vehicle Capacity load
- Front: 2.0 kg-cm^2 (28 psi)
- Rear: 2.8 kg-cm^2 (40 psi)

Tire Size

Front:	3.50 H19
Rear:	4.50 H17A (75 - 77), 4.50 H17 (78 - 79)

Tire Brand

Front:	Super Speed 21 F 2 (Bridgestone) F6 (Dunlop)
Rear:	Super Speed 21 R 2 (Bridgestone) K 87 Mark II (Dunlop)

ENGINE

Type	Water Cooled 4-Stroke
Cylinder Arrangement	Flat Four
Bore and Stroke	72 X 61.4 mm (2.834 X 2.417 in)
Displacement	999 cc (61.0 cu in)
Compression Ratio	9.2:1
Valve Train	Belt Driven Overhead Camshafts
Lubrication System	Forced and Wet Sump
Firing Order	1-3-2-4

© 1978 American Honda Motor Co., Inc.
Printed in U.S.A. 7-78

SERVICE INFORMATION
TROUBLESHOOTING

The most valuable tools a technician can use when performing troubleshooting are the service manual as a guide and source of specifications, and a common sense procedure when trying to locate a problem. As technical innovations increase, so must the technician's ability to quickly isolate any problems that may occur.

For specific system troubleshooting suggestions, refer to the appropriate section of this manual. Each troubleshooting list should be used as a guide when trying to isolate a problem. It is laid out to follow a basic rule of troubleshooting: "Never overlook the obvious".

© 1976 American Honda Motor Co., Inc.
Printed in U.S.A. 7-78

2 MAINTENANCE OPERATIONS

2

MAINTENANCE SCHEDULE 2-2
TORQUE SPECIFICATIONS 2-3
LUBRICANTS AND COOLANT 2-5

© 1976 American Honda Motor Co., Inc.
Printed in U.S.A. 7-78

MAINTENANCE SCHEDULE

This MAINTENANCE SCHEDULE contains mileage intervals which supersede all previous GL-1000 maintenance schedules contained in earlier Shop and Owner's Manuals.

		ITEM \ FREQUENCY	WHICHEVER COMES FIRST ➜ EVERY	ODOMETER READING (NOTE 3) 600 mi (1,000 km)	3,750 mi (6,000 km)	7,500 mi (12,000 km)	11,250 mi (18,000 km)	15,000 mi (24,000 km)	18,750 mi (30,000 km)	22,500 mi (36,000 km)	Refer to
EMISSION RELATED ITEMS		ENGINE OIL	YEAR	R		R		R		R	Page 7-7
		ENGINE OIL FILTER	YEAR	R		R		R		R	Page 7-8
		CRANKCASE BREATHER	NOTE (1)		C	C	C	C	C	C	Page 3-8
		AIR FILTER	NOTE (2)		C	R	C	R	C	R	Page 3-7
	*	FUEL LINES				I		I		I	Page 9-11
	*	FUEL FILTER								R	Page 9-11
		SPARK PLUG			I	R	I	R	I	R	Page 3-12
	*	VALVE CLEARANCE		I		I		I		I	Page 3-9
	*	CONTACT BREAKER POINTS		I	I	I	I	I	I	I	Page 3-13
	*	IGNITION TIMING		I	I	I	I	I	I	I	Page 3-14
	*	THROTTLE OPERATION		I		I		I		I	Page 3-17
	*	CARBURETOR IDLE SPEED		I	I	I	I	I	I	I	Page 3-17
	*	CARBURETOR CHOKE				I		I		I	Page 3-17
	*	CARBURETOR SYNCHRONIZE		I		I		I		I	Page 3-18
		COOLANT				I		I		*R	Page 8-6
	*	RADIATOR CORE				I		I		I	Page 8-11
	*	COOLING SYSTEM, HOSES		I		I		I		I	Page 8-9
NON-EMISSION RELATED ITEMS	*	DRIVE SHAFT JOINT				L		L		L	Page 12-20
	*	FINAL DRIVE LUBRICANT				I		I		R	Page 12-20
		BATTERY	MONTH	I	I	I	I	I	I	I	Page 18-5
		BRAKE FLUID	MONTH I 2 YEAR R	I	I	I	I	I	I	*R	Page 14-6
		BRAKE PAD WEAR			I	I	I	I	I	I	Page 14-9, 14-17
		BRAKE SYSTEM		I		I		I		I	Section 14
	*	BRAKE LIGHT SWITCH		I		I		I		I	Page 17-9
	*	HEADLIGHT AIM		I		I		I		I	Page 17-19
		CLUTCH FREE PLAY		I	I	I	I	I	I	I	Page 10-5
		SIDE STAND				I		I		I	Page 13-29
	*	SUSPENSION		I		I		I		I	Page 13-6
	*	NUTS, BOLTS, FASTENERS		I		I		I		I	Page 3-4
	**	WHEELS		I		I		I		I	Page 14-27
	**	STEERING HEAD BEARING		I		I		I		I	Page 13-16

I: INSPECT, CLEAN, ADJUST, LUBRICATE OR REPLACE IF NECESSARY
C: CLEAN R: REPLACE L: LUBRICATE

*Should be serviced by an authorized Honda dealer, unless the owner has proper tools and service data and is mechanically qualified.

**In the interest of safety, we recommend these items be serviced *only* by an authorized Honda dealer.

NOTES: (1) More frequent service may be required when riding in rain or at full throttle.
(2) More frequent service may be required when riding in dusty areas.
(3) For higher odometer readings, repeat at the frequency interval established here.

© 1978 American Honda Motor Co., Inc.
Printed in U.S.A. 7-78

TORQUE SPECIFICATIONS

LOCATION	PART NAME	TORQUE kg-cm	TORQUE ft-lb
Engine			
Tappets	Tappet adjusting nut	120-160	9-12
Oil filter cover	Oil filter center bolt	270-330	20-24
Engine Installation Rear	Hex bolt 12 x 65	550-650	40-47
Mount Bolts Upper	Hex bolt 10 x 298	300-400	22-29
Front	Hex bolt 12 x 274	550-600	40-43
Spark Plugs		120-190	9-14
Shroud Upper	Hex bolt 10 x 32	300-400	22-29
Lower	Hex bolt 10 x 50	300-400	22-29
Frame body left lower pipe	Hex nut 10 mm	300-400	22-29
	Hex nut 12mm	550-600	40-43
Exhaust pipes	Hex nut 8mm	150-200	11-14
Muffler	Flange nut 8mm	180-250	13-18
Cylinder head	Flange bolt 10 x 90	530-570	38-41
	Flange bolt 10 x 115	530-570	38-41
Camshaft pulley	Hex bolt 8 x 22	250-290	18-21
Crankshaft pulley	Hex bolt 10 x 28	500-550	36-40
Main Bearing caps Cylinder block	Flange bolt 10 x 80	380-420	27.5-30.4
	Flange bolt 10 x 120	330-370	24-27
	Flange bolt 10 x 166	330-370	24-27
	Flange bolt 8 x 175	250-290	18-21
	Flange bolt 8 x 70	250-290	18-21
	Flange bolt 6 x 152	100-140	7-10
	Flange bolt 6 x 110	100-140	7-10
	Flange bolt 6 x 35	100-140	7-10
	Oil drain bolt	350-400	25-29
Alternator flywheel assembly	Flange bolt 12 x 40	800-900	58-65
Clutch center	Lock nut 16mm	380-420	27-30
Alternator bearing holder	Flange bolt 6 x 22	100-140	7-10
Starter rachet	Hex bolt 8 x 22	250-290	18-21
Connecting rods	Connecting rod cap nut	250-290	18-21
Drive Hub			
Pinion shaft nut	16mm	700-900	51-65
Bearing preload retainer	104mm	See Section 12	
Left gear case bolts	8mm bolt	230-280	17-20
Hub attaching nuts	8mm nut	350-450	25-32

© 1976 American Honda Motor Co., Inc.
Printed in U.S.A. 7-78

LOCATION	PART NAME	TORQUE kg-cm	TORQUE ft-lb
Frame			
Handlebar holders	Socket bolt 8 x 30	180-250	13-18
Top bridge	Socket bolt 10 x 38	300-400	22-29
Steering stem	Stem nut	800-1200	58-87
Right step	Hex bolt 12 x 40	550-650	40-47
Pillion steps	Flange bolt 10 x 40	300-400	22-29
Side stand	Hex nut 10 mm	300-400	22-29
Four-way joint	Hex bolt 6 x 40	80-120	6-9
Stop switch (front)	Stop switch	200-250	15-18
Front brake hoses	Oil bolt	250-350	18-25
Front axle holders	Hex nut 8 mm	180-250	13-18
Front brake pipes	Brake pipe	130-150	9-11
Front disc calipers	Hex bolt 10 x 50	300-400	22-29
Front wheel axle	Wheel axle	550-650	40-47
Front brake disc	Hex bolt 8 x 113	270-330	20-24
Rear brake disc	UBS nut 8 mm	270-330	20-24
Rear wheel axle	Wheel axle nut	800-1000	58-72
Rear fork pivot lock nut	Lock nut 23 mm	800-1200	58-87
Rear brake caliper	Hex bolt 12 x 60	500-600	36-43
Rear shock absorbers Upper	Hex nut 10 mm	300-400	22-29
Rear shock absorbers Lower	Hex bolt 10 x 32	300-400	22-29
Rear master cylinder	Flange bolt 8 x 32	180-250	13-18
Rear brake hoses	Brake hose	250-300	18-22
Spokes	Spoke	20-45	1-3
Front brake master cylinder holder	Flange bolt 6 x 25	80-120	6-9
Rear brake line	Hex nut 10mm	180-200	13-15

© 1976 American Honda Motor Co., Inc.
Printed in U.S.A. 7-78

MAINTENANCE OPERATIONS

NOTE

Use only high detergent, premium quality engine oil certified to meet or exceed U.S. automobile manufacturers requirements for service classification SE.

Oils intended for service SE will show this designation on the container. Use of additives is unnecessary and will only increase operating expenses.

Engine oil should always be changed at the intervals prescribed in the maintenance schedule.

LUBRICANTS AND COOLANT

Radiator Cooling System

CAPACITY	3.2 liters	3.4 U.S. Quarts
TYPE	Anti Freeze, Ethylene Glycol type mixed 50% with distilled water.	

Engine Oil

CAPACITY	3.5 liters	3.7 U.S. Quarts
TYPE	Hondaline or equivalent General, all temperatures: SAE 10W40 or SAE 20W50 Alternatives: Above 15°C (59°F): SAE 30 0 to 15°C (32-59° F): SAE 20 or 20W Below 0°C (32°F): SAE 10W	

Transmission Oil

Lubricated by Engine Oil

Final Drive Hub Oil

CAPACITY	210 cc	7.2 oz
TYPE	API GL-5 Hypoid Gear Oil Above 5°C (41°F) SAE 90 Below 5°C (41°F) SAE 80	

Front Fork Oil

CAPACITY (Each Leg)	Refill	175 cc	6 oz
	Dry	200 cc	6.8 oz
TYPE	Automatic Transmission Fluid		

Brake Fluid

TYPE	DOT 3

Engine Assembly Lubricant

Camshaft Followers	Molybdenum Disulfide
Fuel Pump Actuator	Molybdenum Disulfide
Cylinder Head Bolts	Molybdenum Disulfide
Camshaft Bearings	Lubriplate Assembly Grease
Oil Seals and O-rings	Silicon Spray

© 1976 American Honda Motor Co., Inc.
Printed in U.S.A. 7-78

3 TUNE-UP

3

SERVICE INFORMATION 3-2
TROUBLESHOOTING 3-5
AIR FILTER MAINTENANCE 3-7
CRANKCASE BREATHER 3-8
VALVE CLEARANCE ADJUSTMENT 3-9
COMPRESSION TEST 3-11
SPARK PLUG MAINTENANCE 3-12
CONTACT BREAKER POINTS 3-13
STATIC IGNITION TIMING 3-14
DYNAMIC IGNITION TIMING 3-16
CHOKE/THROTTLE/IDLE SPEED 3-17
CARBURETOR SYNCHRONIZATION 3-18

© 1978 American Honda Motor Co., Inc.

Printed in U.S.A. 7-78

SERVICE INFORMATION

Specifications

Electrical

Battery Type: Y50-N18L-A2
- Capacity: 12V, 20 ampere-hours
- Specific Gravity (normal charge): 1.260 at 20°C (68°F)
- Voltage under load (engine not running): 11.5V min.
- Charging rate (external source): 2 amperes maximum

Voltage Regulator: Transistorized, non-adjustable

Ignition System

Spark Plugs: For cold climate . . . . . NGK D7EA or ND X22ES-U
Standard. . . . . NGK D8EA or ND X24ES-U
For extended high speed operation. . . NGK D9EA or ND X27ES-U
- Spark Plug Gap: 0.6 to 0.7mm (0.024 to 0.028 in)

Contact Breaker Points: Dual Toyo Denso
- Point Gap: 0.3 to 0.4mm (0.012 to 0.016 in)
- Point Spring Tension: 650 to 850 grams (1.4 to 1.9 lb)

Condenser capacity: 0.24 MF ± 10%

Ignition Timing:
- "F" Mark (for static or idle speed timing): 10° BTDC (1978, 1979); 5° BTDC (1975 - 1977)
- Full Advance Mark: 37.5° BTDC
- Advance Starts: 1,450 rpm
- Maximum Advance: 2,600 rpm

Engine

Compression Pressure (cold): 12 kg-cm^2 (171 PSI)

Valve Tappet Clearance (cold): Intake & Exhaust 0.10mm (0.004 in)

Firing Order: 1-3-2-4

Engine Oil Pressure:
- At cranking speed:
  - 1.27 kg-cm^2 (18 psi) cold
  - 0.35 kg-cm^2 (5 psi) hot
- At 900 rpm idle speed:
  - 4.22 kg-cm^2 (60 psi) cold
  - 0.84 kg-cm^2 (12 psi) hot
- At 5000 rpm:
  - 4.50 kg-cm^2 (64 psi) cold
  - 4.22 kg-cm^2 (60 psi) hot

© 1978 American Honda Motor Co., Inc.
Printed in U.S.A. 7-78

TUNE-UP
SERVICE INFORMATION

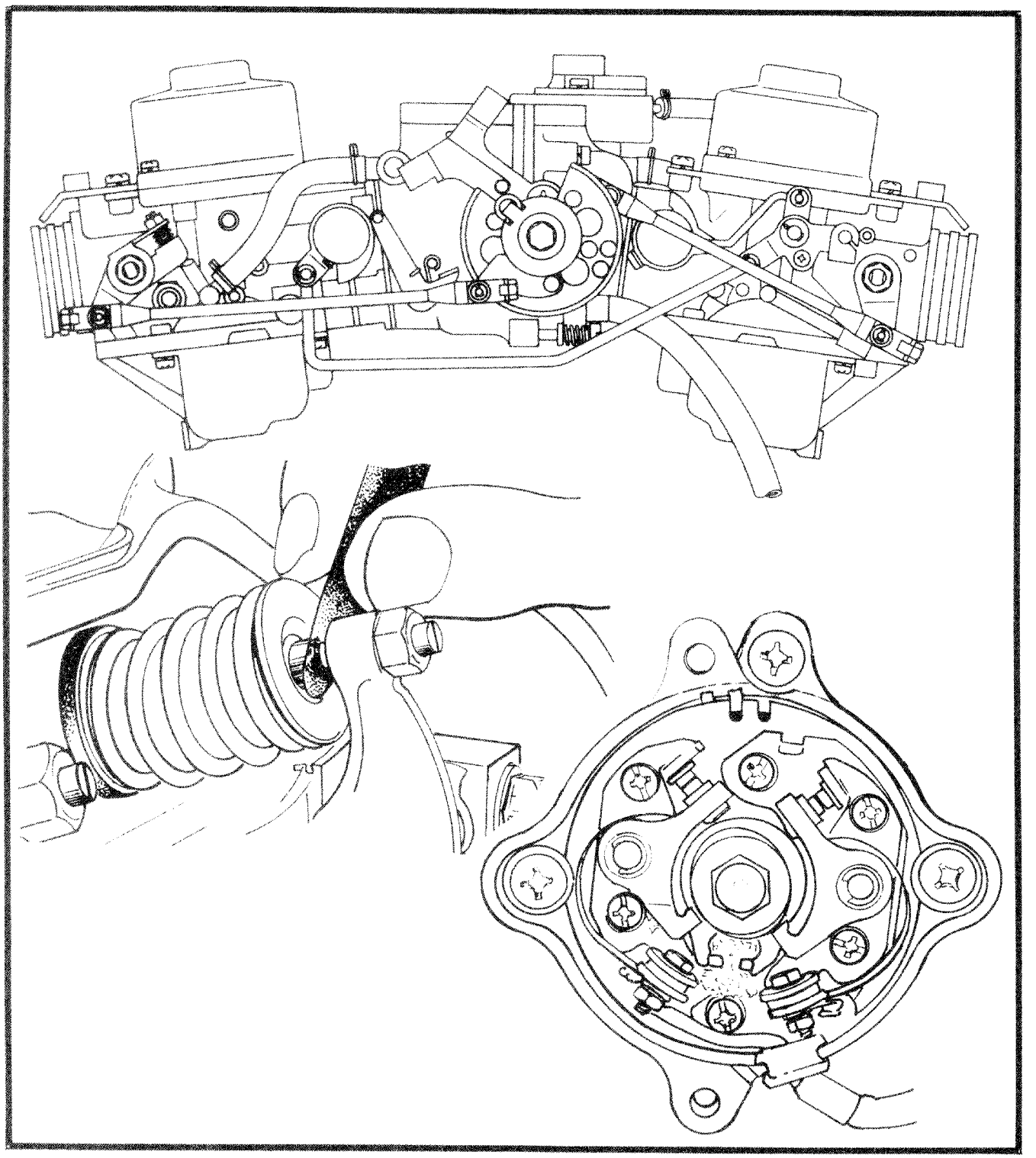

© 1976 American Honda Motor Co., Inc.
Printed in U.S.A. 7-78

SERVICE INFORMATION

Fuel System

Fuel Pump Pressure:
- 0.17 kg/cm^2 (2.4 psi) at cranking speed
- 0.16 kg/cm^2 (2.3 psi) at 1000 rpm idle
- 0.14 kg/cm^2 (2.0 psi) at 5000 rpm

Fuel Pump Volume:
- 350 ml (12 oz) per minute at 600 rpm
- 450 ml (15 oz) per minute at 3000 rpm
- 500 ml (17 oz) per minute at 6000 rpm

CARBURETOR SPECIFICATIONS		
	(Manufactured before 1-1-78)	Emission Controlled Motorcycles (Manufactured after 12-31-77)
Carburetor model number	755A, 758A, 764A, 769A	771A
Venturi bore	31 mm	31 mm
Float level	21 mm (0.827 in)	21 mm (0.827 in)
Pilot screw	1½ turns out	*2 turns out (initial)
Idle speed	950 ± 100 rpm	950 ± 100 rpm
Fast idle speed	2,000 ± 500 rpm	2,000 ± 500 rpm

**Adjust using Pilot Screw Adjustment Procedure, page 9-22.*

Torque Values

Spark Plugs: 120 to 190 kg-cm (104-165 in-lb or 9-14 ft-lb)
Oil Drain Bolt: 350 to 400 kg-cm (25-29 ft-lb)
Oil Filter Center Bolt: 270 to 330 kg-cm (235-287 in-lb)
Coolant Drain Plug: 350 to 400 kg-cm (25-29 ft-lb)
Tappet Adjusting Nuts: 120 to 160 kg-cm (104-139 in-lb)
Rear Hub Drain Bolt: 100 to 140 kg-cm (87-122 in-lb)

Working Practice

Due to the rapid expansion of all engine parts during operation, the engine must be cold during most tune-up checks and adjustments. Cold means "room temperature or less". When possible, schedule tune-up services after an overnight cool down.

Tune-up services are done either to establish peak performance on a new motorcycle, or to restore peak performance to motorcycles already in service.

Nuts, Bolts, Fasteners

Whenever tune-up services are done, all chassis nuts and bolts should be checked that they are tightened to correct torque values. Refer to pages 2-3 and 2-4 for complete torque value listings.

Also, all cotter pins and safety clips should be checked.

Tools and Materials

For Engine Tune-Up:

- Compression tester
- Blade feeler gauge HC 63068
- Timing inspection plug HC 41335
- Timing Strobe light
- Vacuum gauge kit HC 47978
- Tappet adjustment wrench HC 26250
- Carburetor adjustment wrench HC 37828

© 1978 American Honda Motor Co., Inc.
Printed in U.S.A. 7-78

TUNE-UP
TROUBLESHOOTING

For Additional Services:

Coolant Hydrometer
Pressure Gauge and T fitting
Graduated Container - ML
Cooling System Pressure Tester HC 41033
Two Gallon Container
Distilled Water
Ethylene Glycol Anti Freeze

TROUBLESHOOTING

Engine will not Crank

1. Battery or charging system problems	Section 18
2. Starter or starter system problems	Section 15
3. Engine seized	Section 6
4. Switches or accessory problems	Section 17

Engine cranks but will not Start

1. Out of fuel or incorrect fuel	
2. Engine Stop Switch OFF	
3. Ignition system problems	Section 16
4. Fuel filter clogged	Section 9
5. Other fuel system problems	Section 9
6. Fuel cap vent clogged	

Engine cranks but will not start - cold weather

1. Choke setting too lean
2. Ice in fuel lines, carburetors, fuel tank, or fuel filter
3. Battery weak due to low temperature
4. Incorrect engine oil
5. Water pump jammed with ice (incorrect anti freeze ratio)

Engine cranks but will not start - engine hot

1. Fuel flow stopped by boiling in lines, carburetor, or fuel pump.

Run-On (continues to run with ignition off)

1. Excessive carbon build-up in engine

© 1976 American Honda Motor Co., Inc.
Printed in U.S.A. 7-78

Lack of power or High Speed Performance

1. Altitude operation - engine adjusted for normal altitudes will lack performance at high altitudes. Engine set for high altitudes (lean) may show signs of pre-ignition when operated at lower altitudes.	
2. Generator voltage low or battery low	Section 18
3. Ignition system problems	Section 16
4. Intake manifold leaks	
5. Not enough fuel	Section 9
6. Valve springs weak or broken	Section 5
7. Cylinder head gasket blown	Section 5

Misfires at idle

1. Dirty air cleaner	
2. Spark plugs gapped too close	
3. Ignition cables deteriorated	
4. Carburetor problems (choke, dirty jets, high float level, etc.)	Section 9

Mid-range performance poor

1. Faulty spark plugs
2. Incorrect ignition timing
3. Low engine compression
4. Low fuel pump pressure
5. Improperly adjusted throttle linkage
6. Incorrect valve timing

Backfires, Kickbacks, Explosions in Muffler

1. If ignition is too far advanced, premature spark may occur when the engine is cranked.
2. Retarded ignition timing
3. Late valve timing
4. Lean mixture (often due to dirt or water in fuel)
5. Leaky or sticking intake valve or weak or broken intake valve spring
6. Tight exhaust valve(s)
7. Weak or broken exhaust valve spring(s)
8. Burnt exhaust valve(s)

Pre-ignition (mixture ignites before spark plug fires)

1. Hot spot in combustion chamber (carbon particle)
2. Overheated valve (sticking in guide, improperly adjusted)
3. Overheated engine

© 1976 American Honda Motor Co., Inc.
Printed in U.S.A. 7-78

AIR FILTER MAINTENANCE

1. Open the top compartment cover, and remove the tool tray.
2. Unfasten the fuse box and move it out of the way. Remove the side compartment knobs.
3. Remove the two wing nuts from the air filter cover, and remove the cover.
4. Remove the air filter element and clean with compressed air.
5. Check the condition of the air filter element seals, and reinstall.

Clean the air filter element after 6,000 kilometers (3,750 miles), and replace after 12,000 kilometers (7,500 miles). More frequent service and replacement may be required when riding in dusty areas.

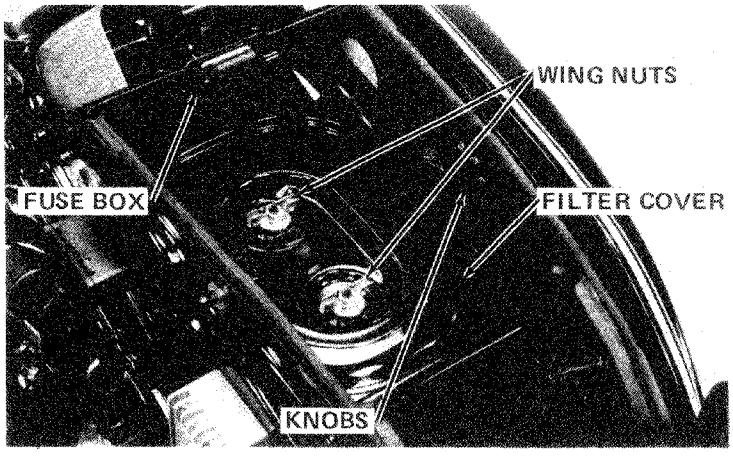

NOTE

The air filter cover in early GL-1000 models is retained by a single wing nut.

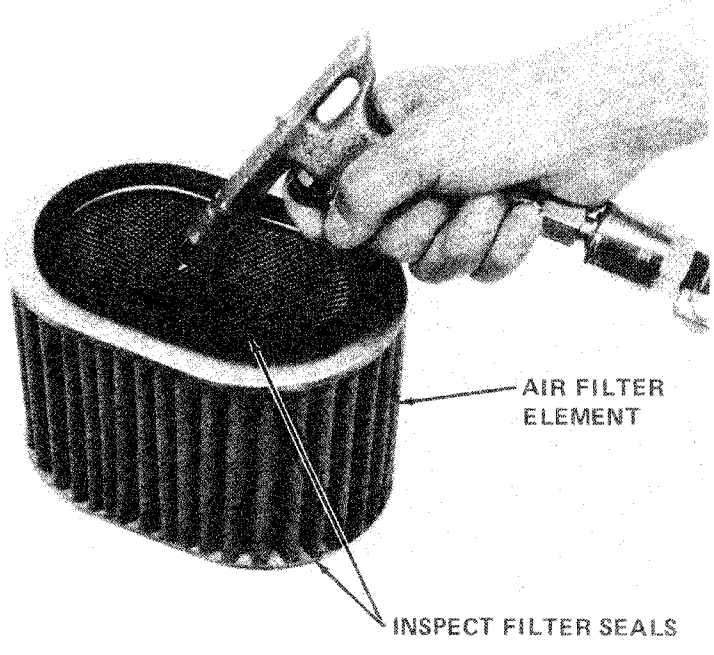

© 1978 American Honda Motor Co., Inc.
Printed in U.S.A. 7-78

CRANKCASE BREATHER

GL1000's manufactured after December 31, 1977 are equipped with a crankcase emission control system which routes crankcase emissions through the air filter and into the combustion chambers. Condensed crankcase vapors are accumulated in a storage container which must be emptied periodically.

1. Detach the drain tube from the storage container, using pliers to spread the tube clamp.
2. Remove the storage container mounting bolt. Remove the storage container from the motorcycle.
3. Remove the flow restrictor from the container, and drain the container.
4. Insert the flow restrictor, and reinstall the container.

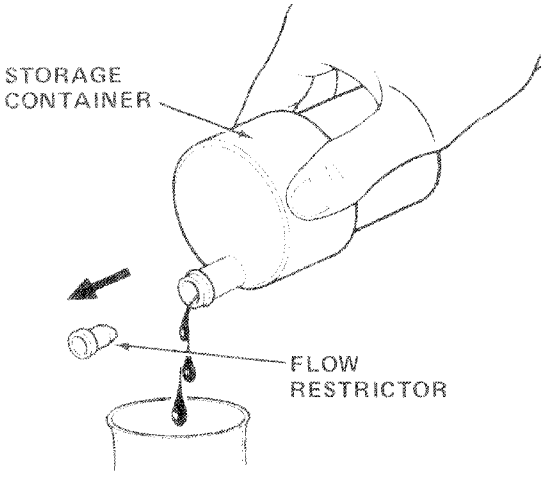

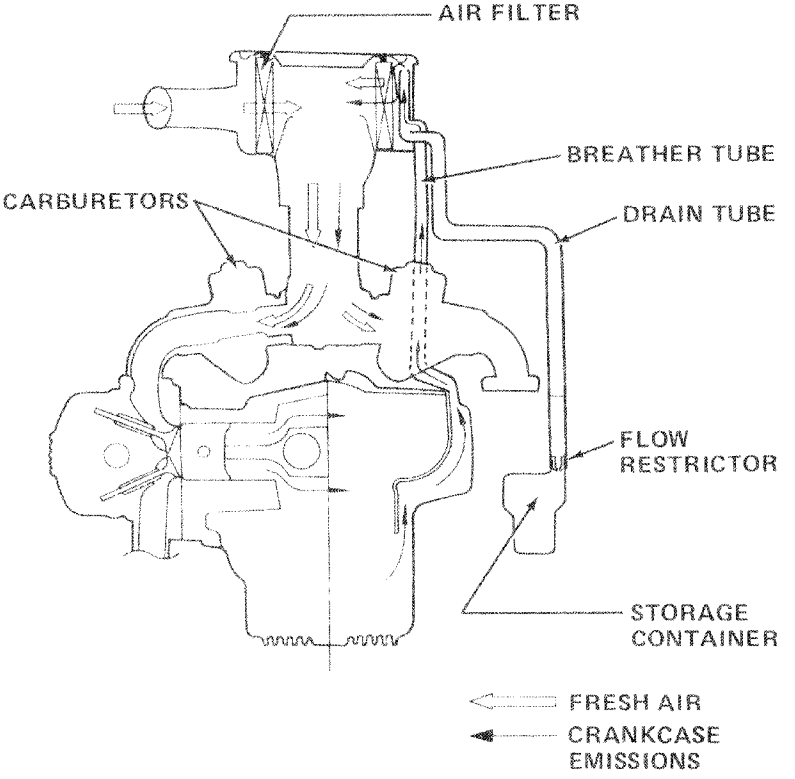

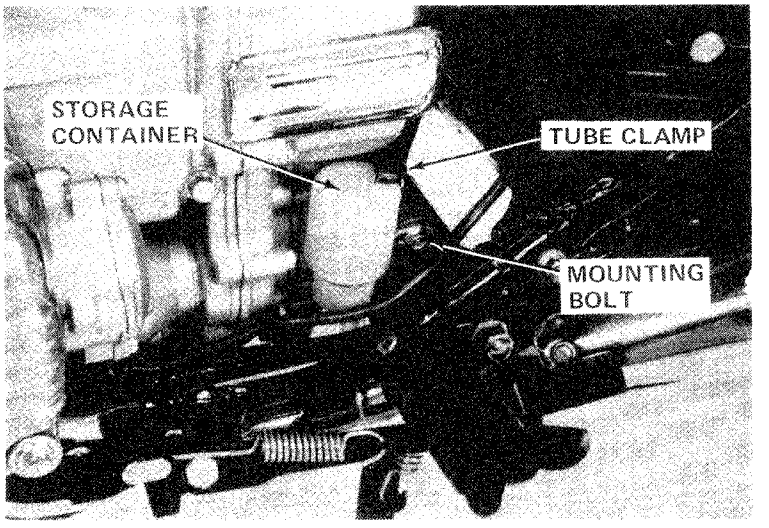

The storage container should be emptied every 6,000 kilometers (3,750 miles). More frequent service may be required if the motorcycle is operated in rainy weather or at full throttle. The section of drain tube just above the storage container is transparent, so the accumulated fluid will be visible if the container becomes overfilled.

© 1978 American Honda Motor Co., Inc.
Printed in U.S.A. 7-78

VALVE CLEARANCE ADJUSTMENT

Check valve tappet clearances every 12,000 kilometers (7,500 miles). Measure clearance and perform adjustment while the engine is cold (below 35°C, 95°F).

1. Remove the timing mark cap, generator bolt cap, and cylinder head covers.

2. Using an offset wrench, turn the generator bolt clockwise, and observe the motion of the intake valves on either of the front cylinders. Continue turning the generator rotor bolt clockwise until the "T-1" timing mark on the flywheel aligns with the index mark on the timing hole.

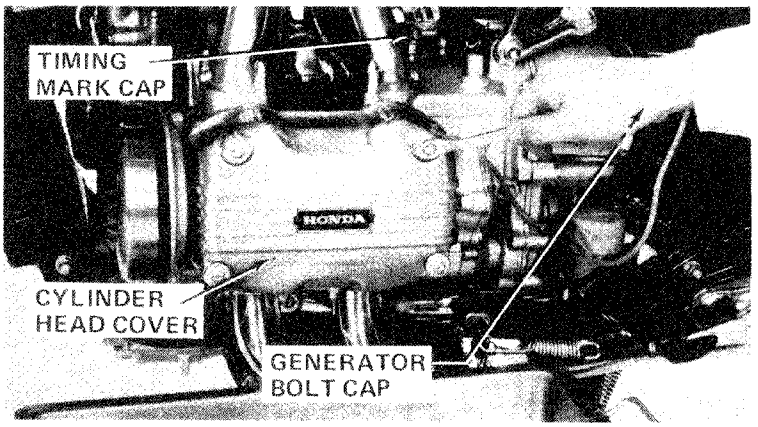

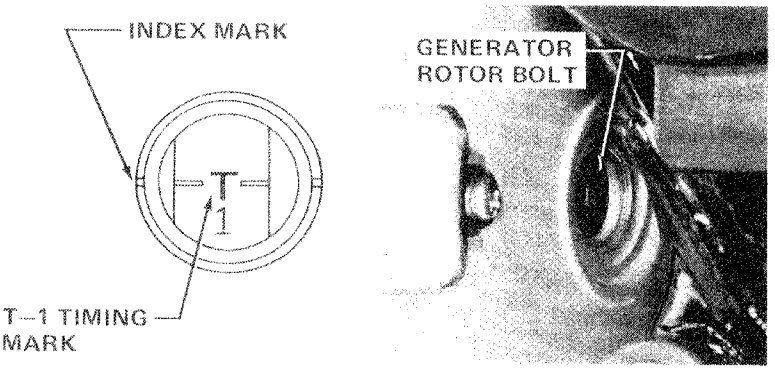

When the "T-1" timing mark aligns after the intake valve on # 1 cylinder (right front) closes, # 1 piston is at TDC (top dead center) of the compression stroke. Check and adjust the following valve tappet clearances:

Valves which are fully closed when # 1 piston is at TDC of compression stroke
- #1 (right front) intake
- #1 (right front) exhaust
- #3 (right rear) exhaust
- #4 (left rear) intake

When the "T-1" timing mark aligns after the intake valve on # 2 cylinder (left front) closes, # 2 piston is at TDC (top dead center) of the compression stroke. Check and adjust the following valve tappet clearances:

Valves which are fully closed when # 2 piston is at TDC of compression stroke
- #2 (left front) intake
- #2 (left front) exhaust
- #3 (right rear) intake
- #4 (left rear) exhaust

NOTE
The two timing positions described above are 360° apart, and alignment of the "T-1" timing mark may indicate either position. When one position has been ascertained by observing intake valve motion, the other position can be reached by simply cranking the engine one full crankshaft revolution.

© 1978 American Honda Motor Co., Inc.
Printed in U.S.A. 7-78

3. Check valve tappet clearance by inserting a feeler gauge between the valve stem and the tappet adjusting screw. The correct valve tappet clearance is 0.10mm (0.004 in.). If adjustment is necessary, loosen the tappet adjusting screw lock nut, and turn the tappet adjusting screw to achieve the correct clearance. Hold the tappet adjusting screw and retighten the lock nut. Recheck valve tappet clearance.

4. Reinstall the timing mark cap, generator bolt cap, and cylinder head covers.

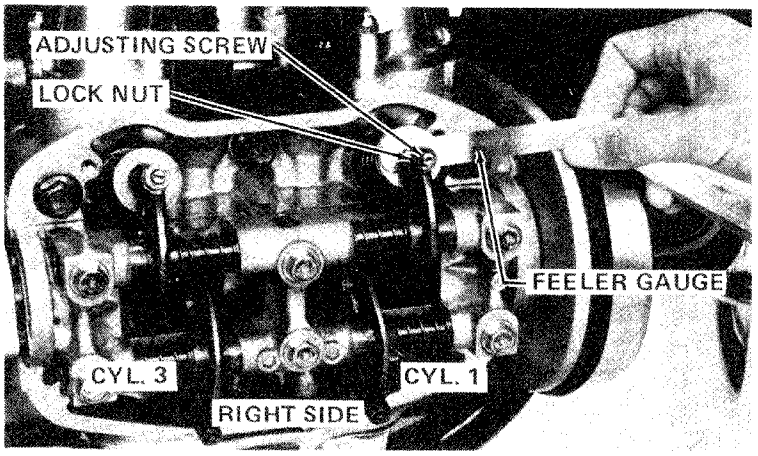

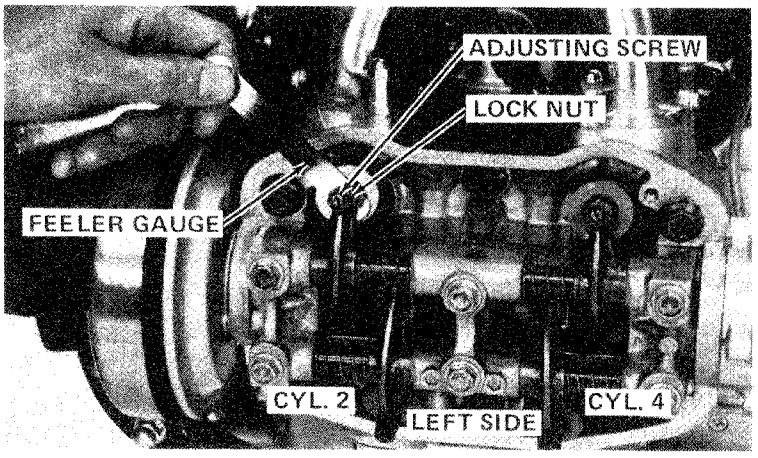

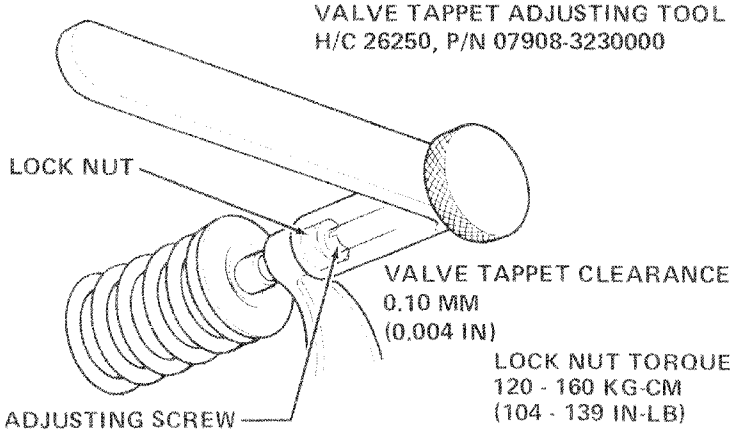

© 1978 American Honda Motor Co., Inc.
Printed in U.S.A. 7-78

COMPRESSION TEST

1. Disconnect the spark plug caps and remove all four spark plugs.

   NOTE
   Before removing spark plugs, clean the area around the base of the plugs to prevent dirt or debris from falling into the combustion chambers through the open spark plug wells. After the spark plugs have been removed, use a stiff wire to clear the water drain holes located beside the spark plug wells.

2. Insert a compression gauge in one of the spark plug wells. With the engine stop switch turned off, the choke and throttle fully open, crank the engine with the electric starter until the gauge reading stops rising. The maximum reading is usually reached in five or six engine revolutions. Repeat this procedure for each cylinder.

Normal compression pressure is 12 kg/cm^2 (171 psi). Compression pressure above 14 kg/cm^2 (199 psi), indicates that carbon deposits have accumulated in the combustion chamber or on the piston. Disassemble and decarbonize.

If the compression pressure is below 10 kg/cm^2 (142 psi), or if there is a 1.0 kg/cm^2 (15 psi) variation between cylinders, this indicates leakage at the valves, piston rings, or cylinder head gasket. Disassemble and repair.

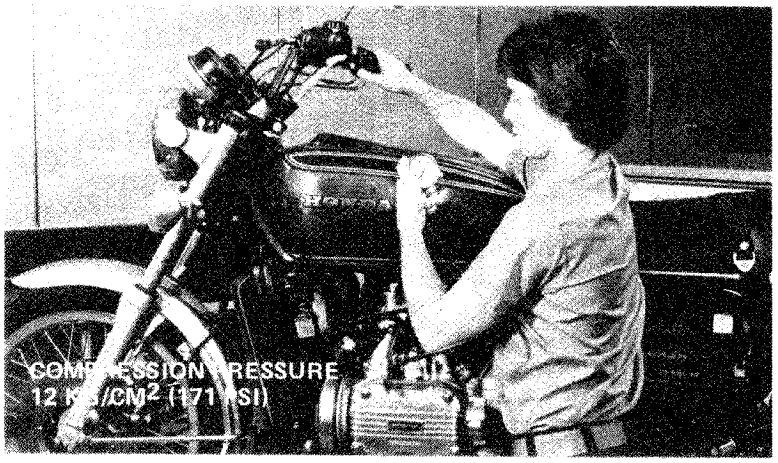

© 1978 American Honda Motor Co., Inc.
Printed in U.S.A. 7-78

SPARK PLUG MAINTENANCE

Normal maintenance requires spark plug inspection after 6,000 kilometers (3,750 miles) and replacement after 12,000 kilometers (7,500 miles).

RECOMMENDED SPARK PLUG TYPE AND HEAT RANGE:

For cold climate:
NGK D7EA or ND X22ES-U

Standard:
NGK D8EA or ND X24ES-U

For extended high speed operation:
NGK D9EA or ND X27ES-U

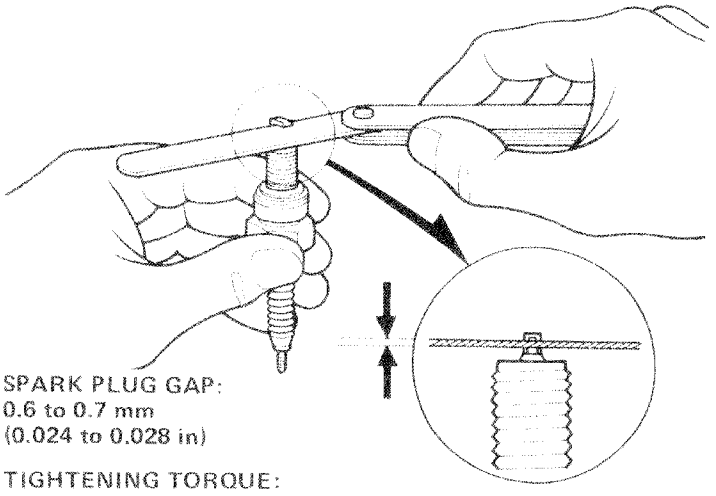

SPARK PLUG GAP:
0.6 to 0.7 mm
(0.024 to 0.028 in)

TIGHTENING TORQUE:
120 to 190 KG-CM
(104 to 165 IN-LB)

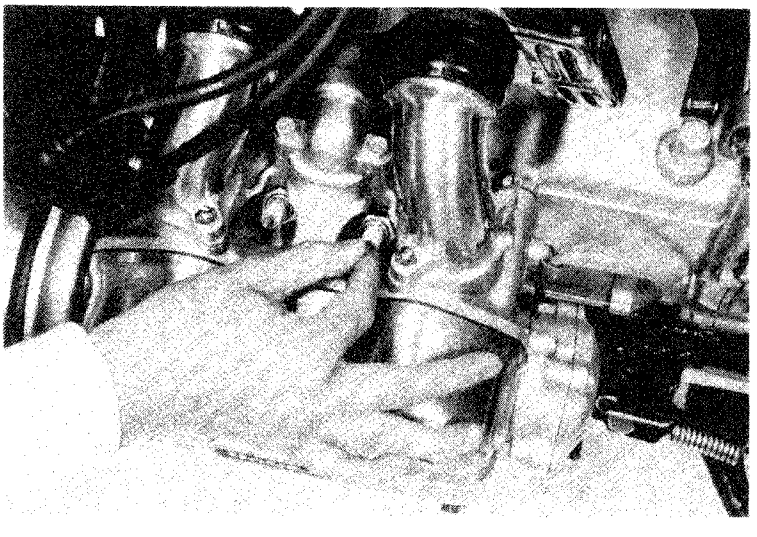

1. Disconnect spark plug caps and remove spark plugs.

2. Visually inspect spark plugs for wear.

   Center electrodes should have square edges, and side electrodes should have a constant thickness. Discard spark plugs which appear worn or have cracked or chipped insulators. Remove fouling deposits with a sandblast spark plug cleaner.

3. Check electrode gap with a clearance gauge (a wire-type clearance gauge will measure electrode gap more accurately than a flat gauge). The correct electrode gap is 0.6 - 0.7 mm (0.024 - 0.028 in). Adjust gap, if necessary, by carefully bending the side electrode.

4. Install spark plugs finger-tight, then use a spark plug wrench for final tightening. Reconnect the spark plug caps.

   Initial placement of spark plugs is done without using the force of a wrench in order to prevent the possibility of cross-threading the spark plugs in the cylinder head. Spark plug gaskets can be reused several times, provided they remain with the same spark plugs and cylinders with which they were originally used.

© 1978 American Honda Motor Co., Inc.
Printed in U.S.A. 7-78

CONTACT BREAKER POINTS

Normal maintenance requires contact point inspection every 6,000 kilometers (3,750 miles).

1. Remove the contact point cover. Remove the generator rotor bolt cap.
2. Inspect the contact point surfaces. If contact surfaces are level, but grayish in color or slightly pitted, file or sand them lightly.

   If the contact points have a noticeable transfer of metal from one surface to the other, have evidence of arcing, or are worn at an angle, the point set should be replaced. Metal transfer or arcing may indicate the need for condenser replacement as well.
3. Using an offset wrench, turn the generator bolt clockwise until the contact points have opened to their maximum clearance. Measure contact point gap by inserting a clearance gauge between the contact surfaces. The correct contact point gap is 0.3 - 0.4 mm (0.012 - 0.016 in).
4. If adjustment is necessary, loosen the contact breaker plate locking screws and move the contact breaker plate.
5. Clean contact point surfaces with an electrical contact cleaner to remove oil film or dirt.
6. After adjusting each contact point set, tighten the contact breaker plate locking screws and recheck the gap.
7. Lubricate the contact point cam with a thin film of grease.
8. Adjust ignition timing.

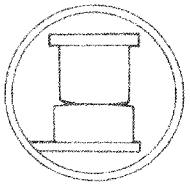

NEW

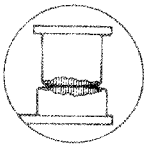

USED
File or sand to remove light pitting and corrosion.

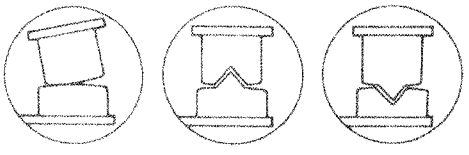

UNSERVICEABLE
Replace if worn at an angle or badly pitted.

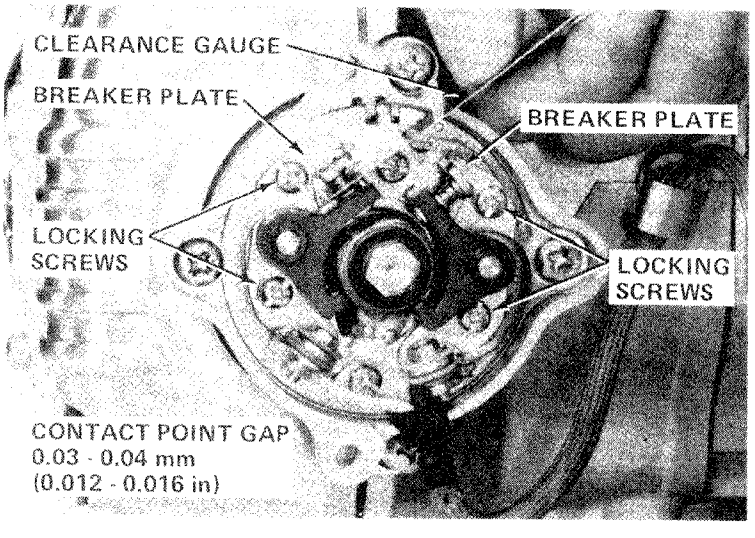

© 1978 American Honda Motor Co., Inc.
Printed in U.S.A. 7-78

STATIC IGNITION TIMING

Check ignition timing after performing contact breaker point gap adjustment. Static timing can be performed with a simple continuity light, as shown in the accompanying illustrations, or with a self-powered continuity light unit, "buzz box", or ohmmeter.

Remove the point cover.

For a *parallel* hook-up, attach one light lead to the contact point positive terminal or spring and the other light lead to any convenient engine or frame ground. A parallel continuity light is powered by the battery installed in the motorcycle, and the ignition switch and engine switch must be turned on to activate the circuit.

NOTE

If the continuity light is connected in *parallel* with one of the contact point sets, the light will come *on* when the points open.

Perform the following steps to make a *series* hook-up:

a. Remove the left side cover from the motorcycle, and disconnect the contact point leads.

b. Attach one continuity light lead to the battery positive terminal and the other lead to the contact point positive terminal or spring.

   NOTE

   The series continuity light can be powered by the battery installed in the motorcycle, or by a separate battery provided the battery negative terminal is connected to an engine or frame ground.

NOTE

If the continuity light is connected in *series* with one of the contact point sets, and the contact point leads are disconnected, the light will go *off* when the points open.

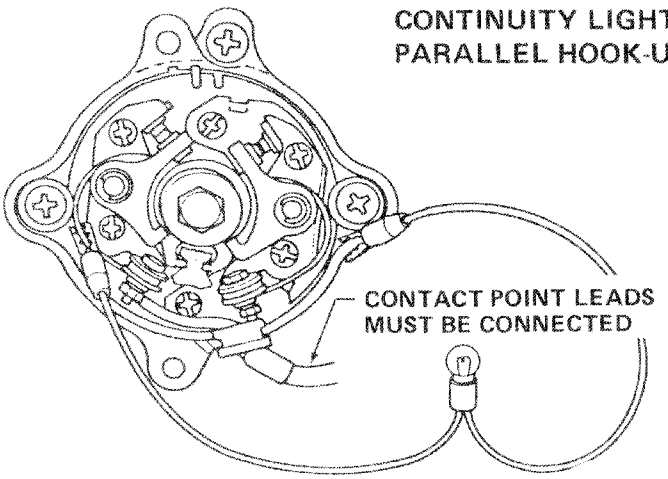

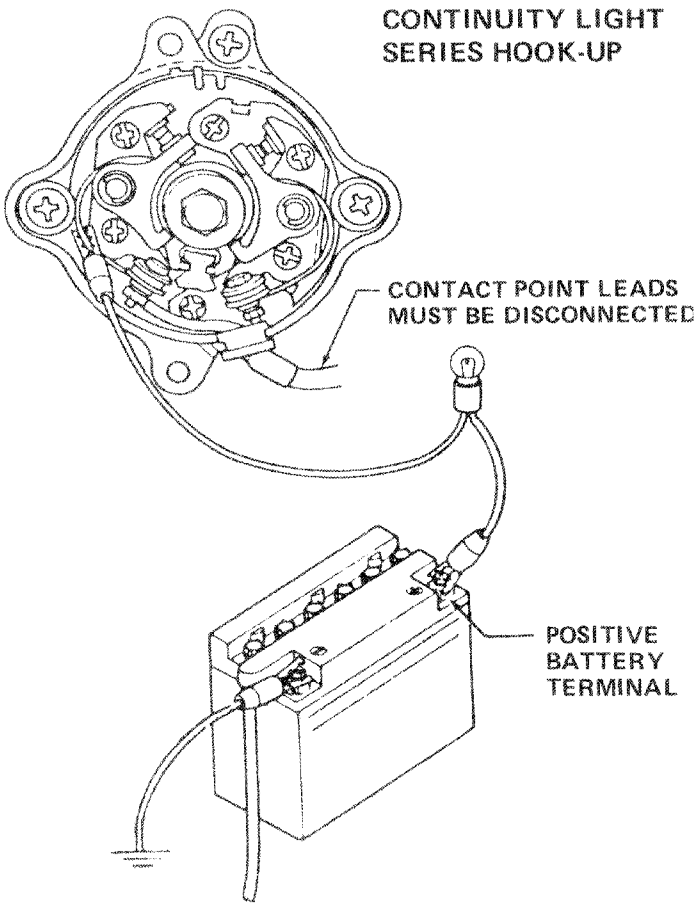

© 1978 American Honda Motor Co., Inc.
Printed in U.S.A. 7-78

STATIC IGNITION TIMING

1. With a continuity light connected to the left (#1/#2 cylinder) contact point set (see page 3-14), and the timing mark cap and generator rotor bolt cap removed, turn the generator bolt clockwise until the "F-1" timing mark on the flywheel aligns with the index mark on the timing hole.

   If static timing is correct, the continuity light will indicate that the contact points open when the "F-1" timing mark aligns with the index mark.

   If timing is incorrect, loosen the *contact point base plate* locking screws, and rotate the base plate. Rotate the base plate clockwise to advance timing or counterclockwise to retard timing. Tighten the base plate locking screws, and recheck point gap and timing.

2. Connect the continuity light to the right (#3/#4 cylinder) contact point set, and turn the generator bolt clockwise until the "F-2" timing mark on the flywheel aligns with the index mark of the timing hole.

   If static timing is correct, the continuity light will indicate that the contact points open when the "F-2" timing mark aligns with the index mark.

   If timing is incorrect, loosen the *#3/#4 base plate* locking screws, and rotate the base plate. Rotate the base plate clockwise to advance timing or counterclockwise to retard timing. Tighten the base plate locking screws, and recheck point gap and timing.

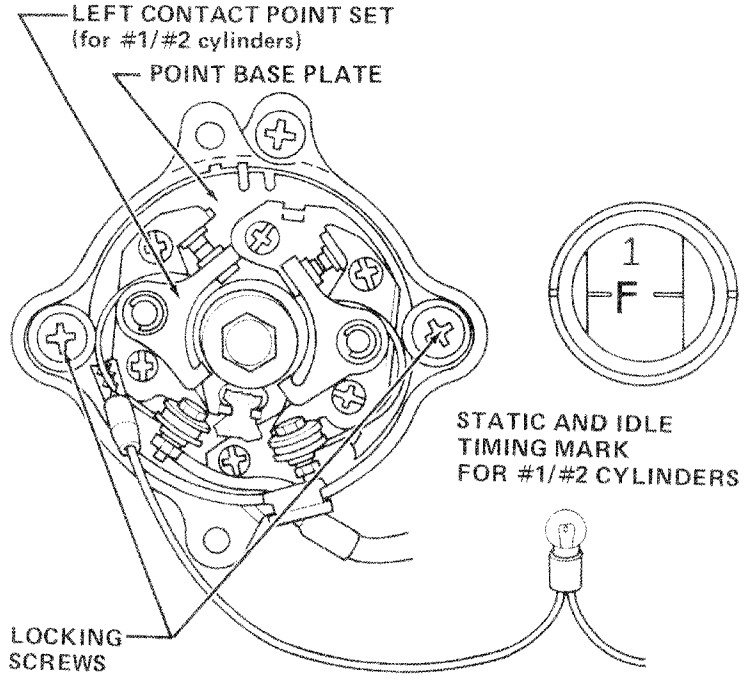

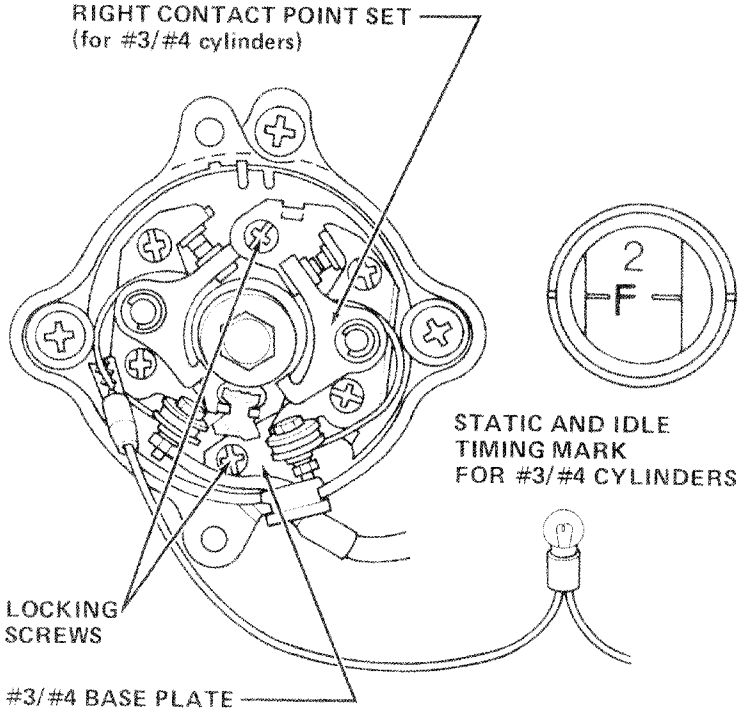

© 1978 American Honda Motor Co., Inc.
Printed in U.S.A. 7-78

DYNAMIC IGNITION TIMING

1. Install timing inspection cap (H/C 63068).
2. IGNITION TIMING FOR #1/#2 CYLINDERS:
   a. Connect a stroboscopic timing light to the #1 or #2 cylinder spark plug lead. Start the engine.
   b. Check idle ignition timing with the engine running at 950 ± 100 rpm. Idle ignition timing is correct if the "F-1" timing mark on the flywheel aligns with the index mark on the timing hole.
   c. Check full advance ignition timing with the engine running at least 3,000 rpm. Full advance ignition timing is correct if the full advance timing mark aligns with the index mark.

   If timing is incorrect, follow the adjustment procedure described in Step 1, page 3-15.
3. IGNITION TIMING FOR #3/#4 CYLINDERS:
   a. Connect a stroboscopic timing light to the #3 or #4 cylinder spark plug lead.
   b. Check idle ignition timing with the engine running at 950 ± 100 rpm. Idle ignition timing is correct if the "F-2" timing mark on the flywheel aligns with the index mark on the timing hole.
   c. Check full advance ignition timing with the engine running at least 3,000 rpm. Full advance ignition timing is correct if the full advance timing mark aligns with the index mark.

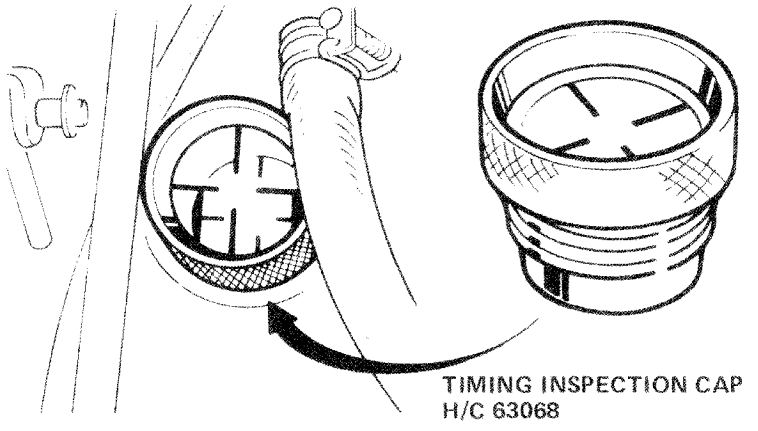

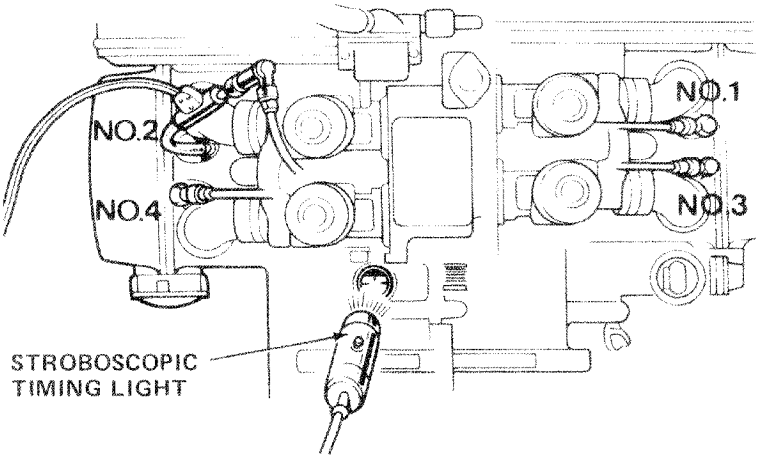

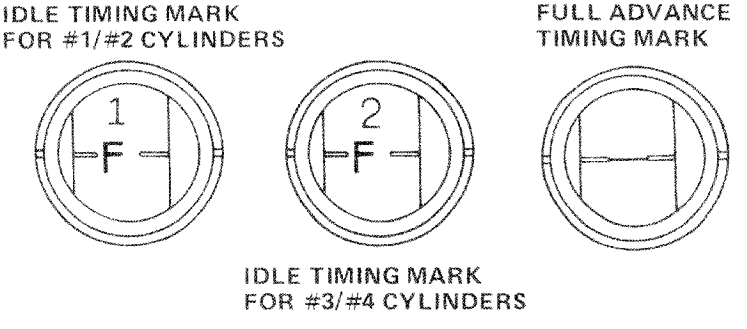

If timing is incorrect, follow the adjustment procedure described in Step 2, page 3-15.

© 1978 American Honda Motor Co., Inc.
Printed in U.S.A. 7-78

CHOKE/THROTTLE/IDLE SPEED

CHOKE

Inspection

With the choke tension adjuster turned counterclockwise to relieve tension, move the choke knob through its full operating range, and check smoothness of operation. Visually inspect the choke cable. Replace worn, damaged, or binding choke cables.

Adjustment

Adjust choke control tension so the knob will remain wherever it is positioned, but can be moved without excessive force.

Turn the adjuster clockwise to increase tension or counterclockwise to decrease tension.

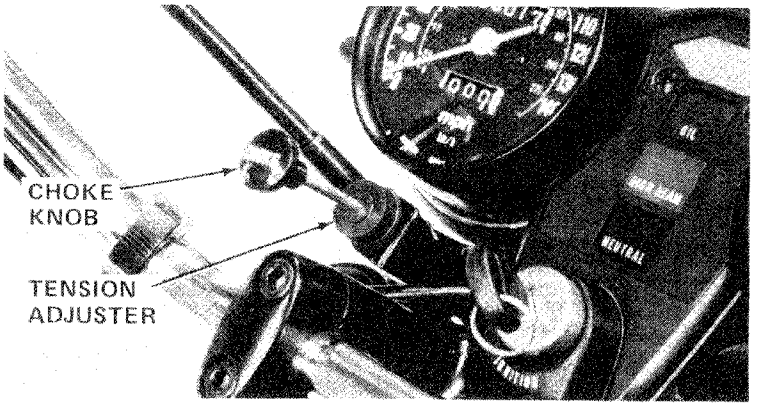

THROTTLE

Inspection

Operate the throttle grip. Check smoothness of rotation from fully closed to fully opened positions at all steering positions. Visually inspect the throttle cables. Replace worn, damaged, or binding cables.

Adjustment

Measure throttle grip free play on the circumference of the grip flange. The amount of free play is 2 - 6 mm (1/8 - 1/4 in).

If adjustment is required, loosen the adjuster lock nut, and turn the adjuster. Retighten the lock nut.

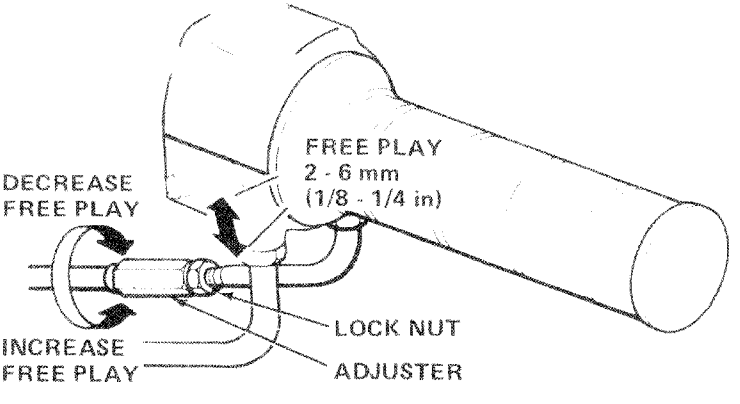

IDLE SPEED

Park the motorcycle on its center stand with the transmission in neutral. Check idle speed with the engine running at normal operating temperature. The correct idle speed is 950 ± 100 rpm.

NOTE

The engine is at normal operating temperature when the coolant temperature gauge needle is above the center of the wide white line zone.

Adjust idle speed by turning the throttle stop screw.

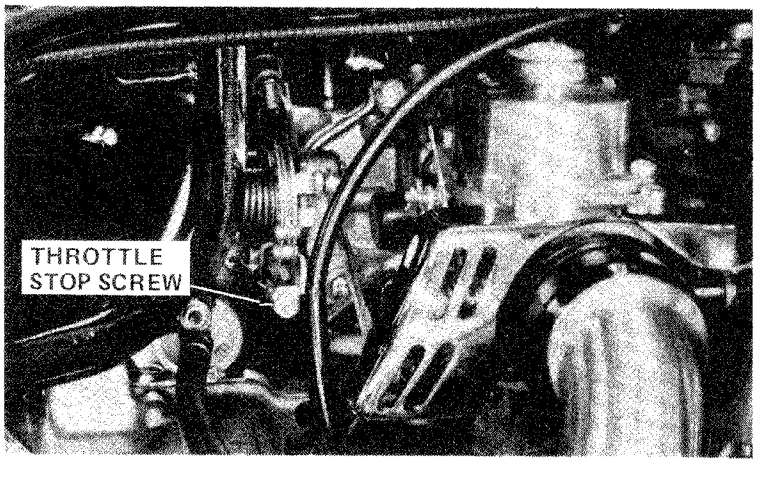

© 1978 American Honda Motor Co., Inc.
Printed in U.S.A. 7-78

CARBURETOR SYNCHRONIZATION

Carburetor synchronization is performed with the motorcycle parked on its center stand, transmission in neutral, and engine at normal operating temperature.

1. Remove the vacuum gauge adaptor screws from the carburetor spacers, install vacuum hose adaptors, and attach the vacuum gauge set.

2. Start the engine and adjust idle speed to 950 ± 100 rpm.

3. Check vacuum gauge readings. All cylinders should read within 50 mm Hg (2 in Hg) of each other. If the difference between cylinder readings is greater than 50 mm Hg (2 in Hg), adjustment is required, as described in steps 4 - 7.

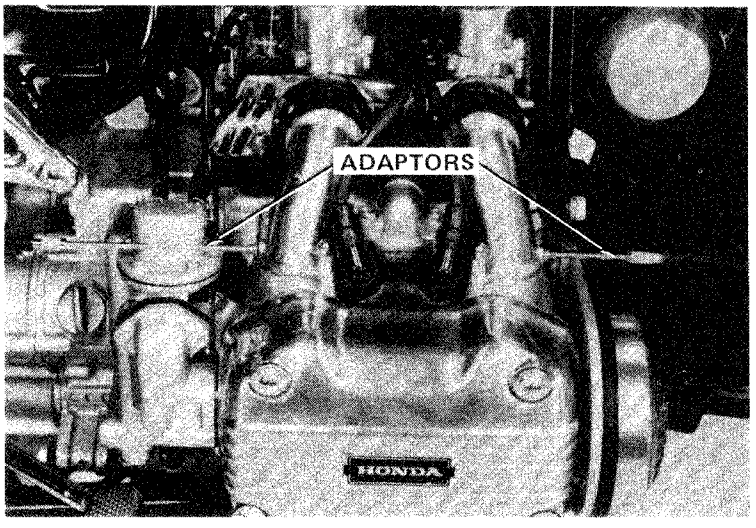

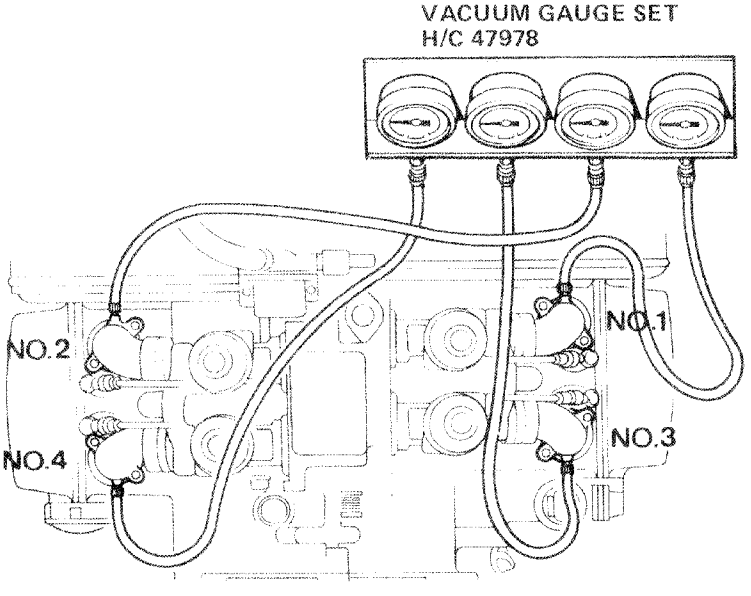

GL-1000 SHOP MANUAL
© 1978 American Honda Motor Co., Inc.
Printed in U.S.A. 7-78

TUNE-UP
CARBURETOR
SYNCHRONIZATION

4. Use the carburetor adjustment wrench HC 37828 to loosen the adjusting screw lock nut at the #1 carburetor, and turn the screw to synchronize the #1 and #3 carburetors. Adjustment is correct when #1 and #3 cylinders show approximately the same vacuum gauge readings. Retighten the lock nut.

5. Loosen the adjusting screw lock nut at the #2 carburetor, and turn the screw to synchronize the #2 and #4 carburetors. Adjustment is correct when #2 and #4 cylinders show approximately the same vacuum gauge readings. Retighten the lock nut.

6. Loosen the adjusting screw lock nut at the linkage bar behind the #4 carburetor, and turn the screw to synchronize left and right cylinder pairs. Adjustment is correct when all cylinders show approximately the same vacuum gauge readings. Retighten the lock nut.

7. Check idle speed, and readjust if necessary. Recheck vacuum gauge readings. Carburetor synchronization adjustment is completed if all cylinders read within 50 mm Hg (2 in Hg) of each other, with the engine idling at 950 ± 100 rpm. Disconnect the vacuum gauge set and reinstall the vacuum gauge adaptor screws in the carburetor spacers.

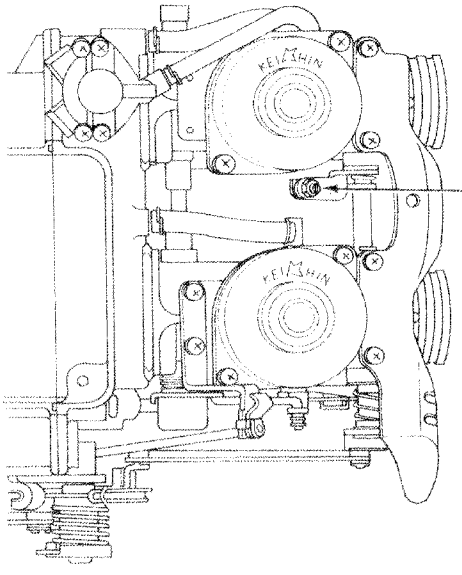

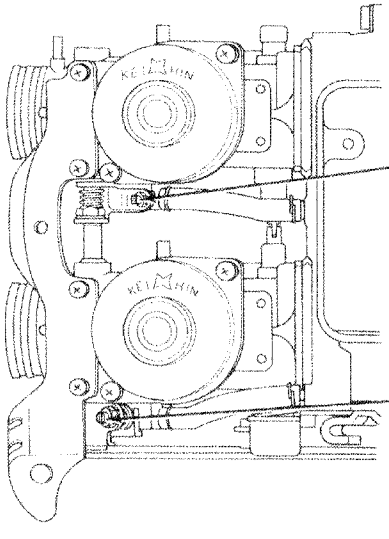

© 1978 American Honda Motor Co., Inc.
Printed in U.S.A. 7-78

4 ENGINE REMOVAL & INSTALLATION

4

SERVICE INFORMATION 4-2
REMOVAL 4-4
INSTALLATION 4-12

© 1976 American Honda Motor Co., Inc.
Printed in U.S.A. 7-78

SERVICE INFORMATION

Specifications

Engine Weight
106.1 kg (234 lb dry)
97.7 kg (215 lb) without carburetion
85.7 kg (189 lb) without carburetion or exhaust system

Torque Values
6mm bolts - 100 to 140 kg-cm (87 - 122 in-lb)
8mm bolts - 250 to 290 kg-cm (217 - 252 in-lb)
10mm bolts - 3.0 to 4.0 kg-m (22 - 29 ft-lb)

Radiator drain plug	3.5 to 4.0 kg-m (25 - 29 ft-lb)
Oil drain plug	3.5 to 4.0 kg-m (25 - 29 ft-lb)
Oil filter center bolt	270 to 330 kg-cm (235 - 286 in-lb)

Working Practice

The radiator and crankcase should be drained before the engine is removed.

A jack or other adjustable support is required to support and maneuver the engine.

The lower left frame tube is removable to assist engine removal.

The carburetor assembly may be detached and left in the frame to speed engine removal.

NOTE
Always clean the oil pick-up screen when the engine is removed. Access to the screen is through the lower right-hand side of the crankcase.

Tools and Materials

Snap ring pliers with 90 degree tips HC 41302
Containers for coolant and oil
Engine jack
Torque wrench 0 - 350 kg-cm (0 - 300 in-lb)
Torque wrench 0 - 25 kg-m (0 - 150 ft-lb)
Bungee cord to support carburetor assembly
Engine oil
Coolant mixture

© 1976 American Honda Motor Co., Inc.
Printed in U.S.A. 7-78

ENGINE REMOVAL & INSTALLATION SERVICE INFORMATION

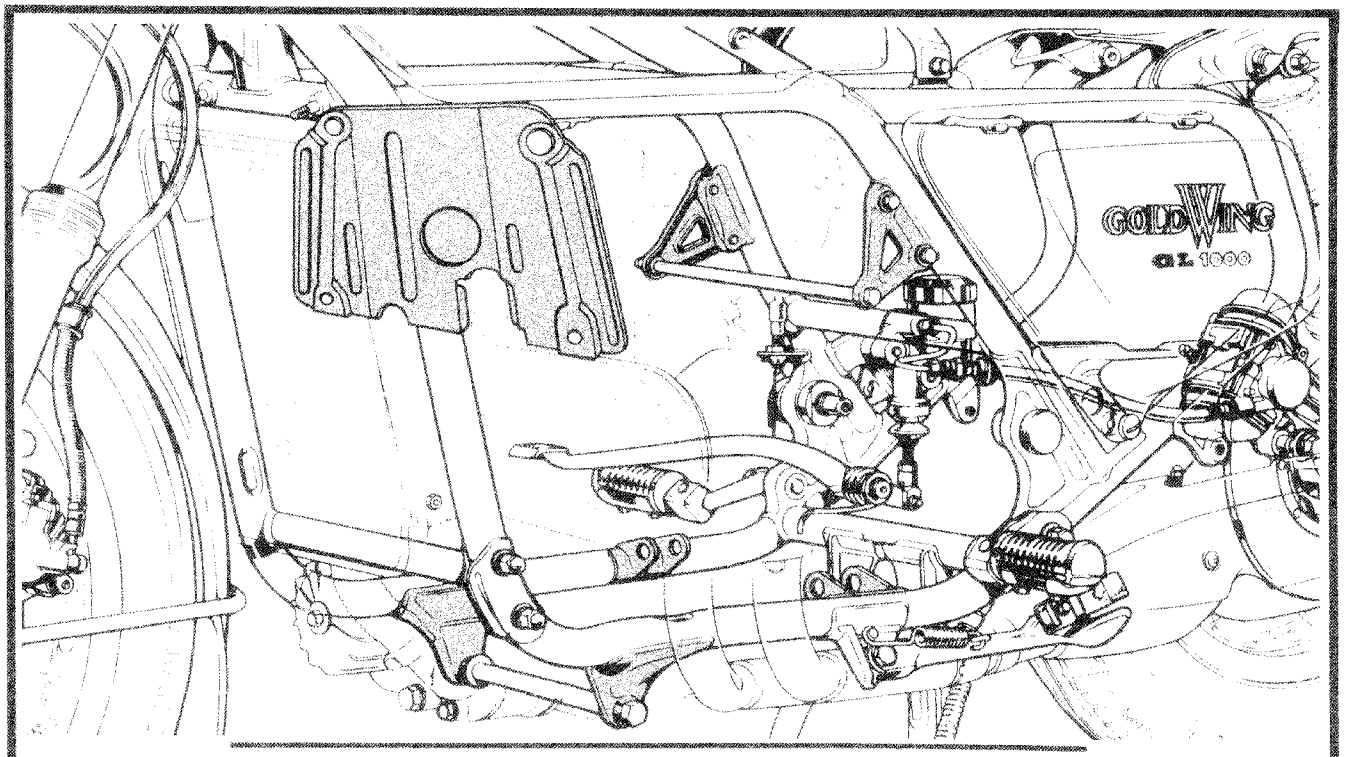

ENGINE MOUNTING BOLT AND NUT TORQUE SEQUENCE

1. 10mm cap nut
2. 8mm cap nuts
3. 12 x 65 (R) 12 x 80 (L)
4. 12 x 274
5. 8 x 16 (R & L)
6. 10 x 298
7. 10 x 50 (R & L)
8. 10 x 45 (R & L)

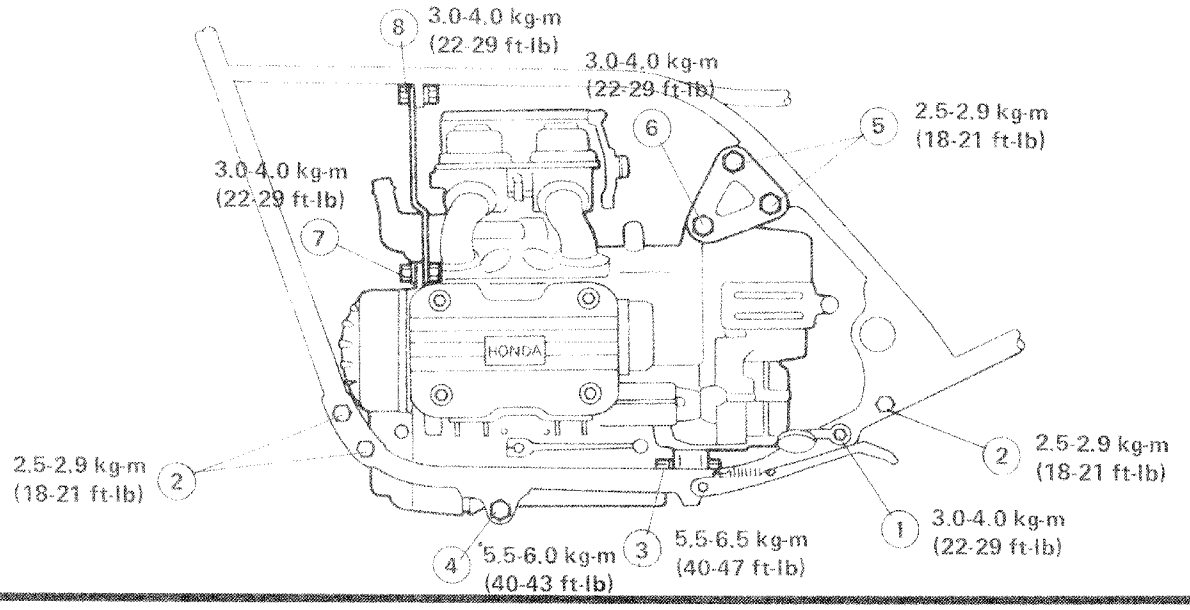

© 1976 American Honda Motor Co., Inc.
Printed in U.S.A. 7-78

REMOVAL

Draining the Coolant

WARNING

Allow the motorcycle to cool before draining the radiator.

Remove the radiator reserve tank cap. Withdraw the siphon tube from the coolant and detach the return line at the radiator filler neck. It is not necessary to drain the reserve tank.

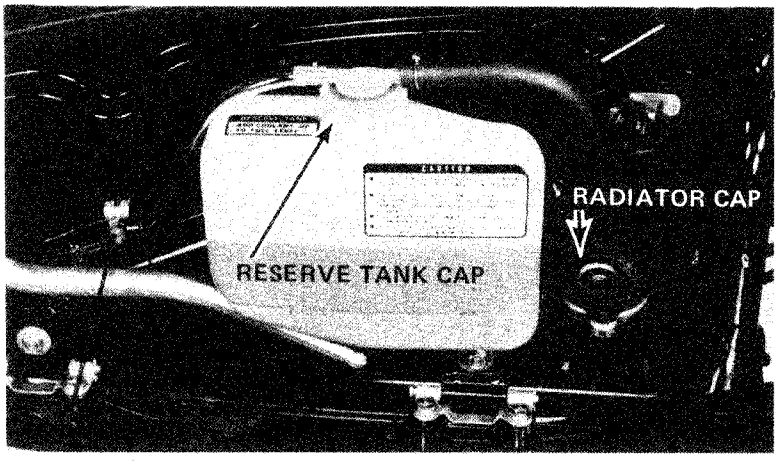

Remove the drain plug and radiator cap to drain the cooling system.

Drain the coolant into a clean pan.

Replace the drain plug when the system is empty.

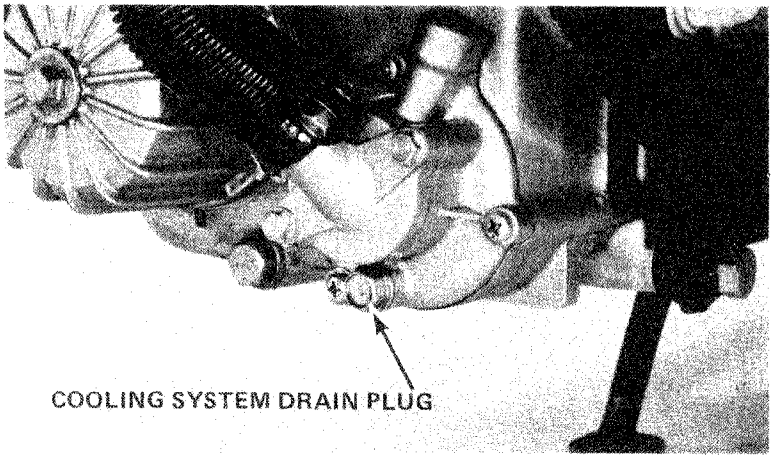

Draining the Engine Oil

Remove the drain plug and the oil filter center bolt.

Remove the oil filter to drain oil from the housing. Replace the filter, drain plug and center bolt.

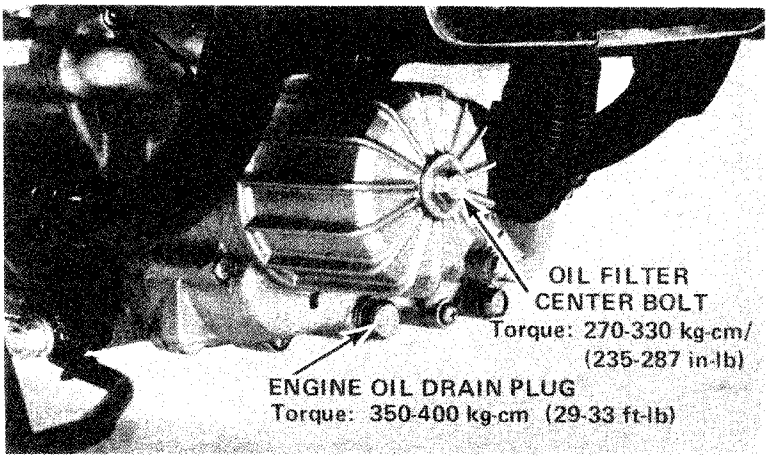

© 1978 American Honda Motor Co., Inc.
Printed in U.S.A. 7-78

ENGINE REMOVAL & INSTALLATION
REMOVAL

Exhaust System Removal

Remove the L and R exhaust manifold nuts.

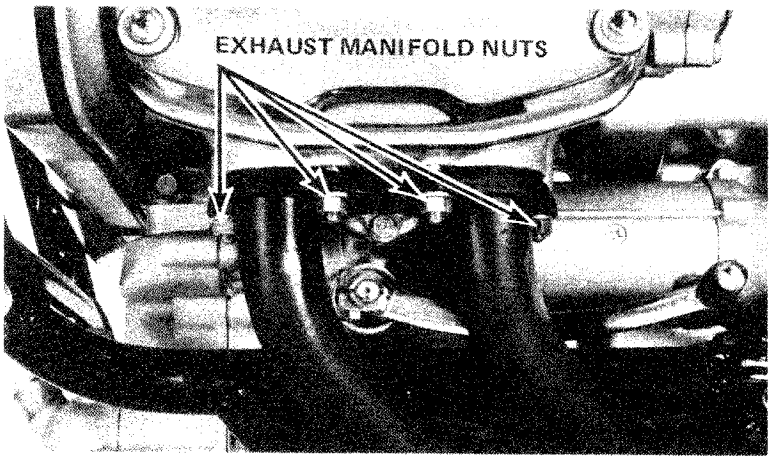

Loosen the L and R exhaust pipe clamp bolts.

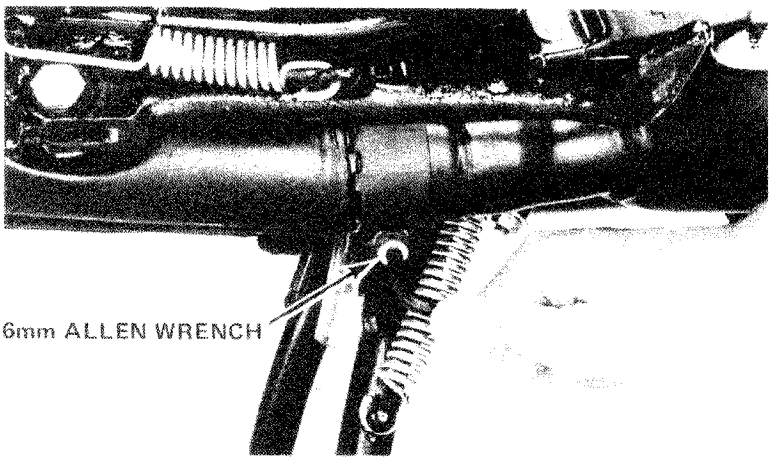

Loosen the L and R muffler mounting bolts. Tilt the muffler assembly forward and remove the L and R exhaust pipes.

Remove the L and R muffler mounting bolts with the foot pegs and remove the muffler.

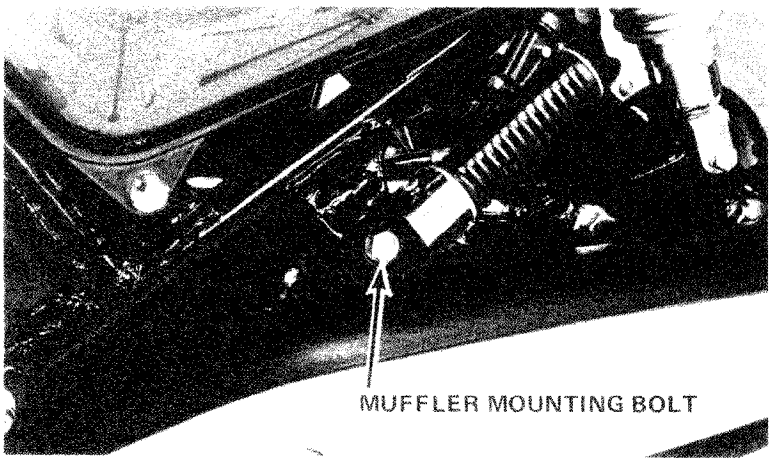

© 1978 American Honda Motor Co., Inc.
Printed in U.S.A. 7-78

Electrical System Disconnections

Remove the left side cover, disconnect the battery ground cable (negative). Disconnect the breaker point connectors and alternator connector. Pull these wires clear of the frame.

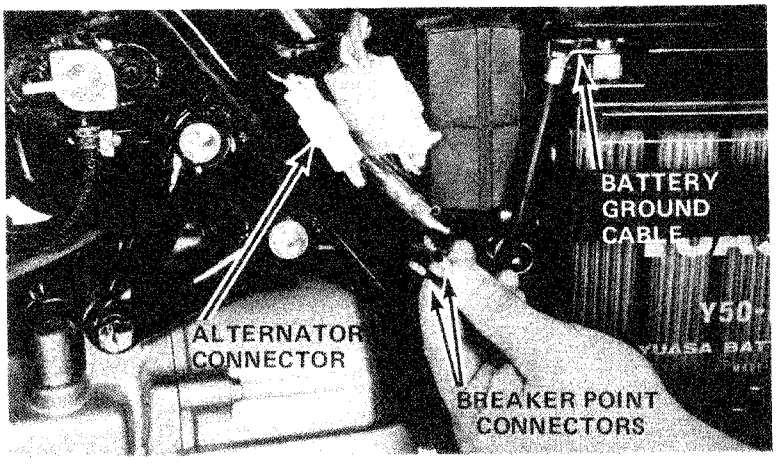

Starter Cable Removal

Disconnect the starter cable at the starter.

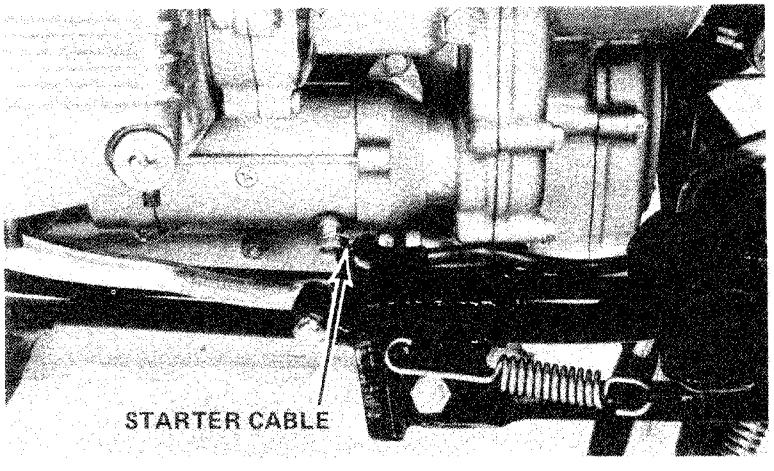

Radiator Removal

Disconnect the upper hose from the thermostat cover and the lower hose from the water pump cover.

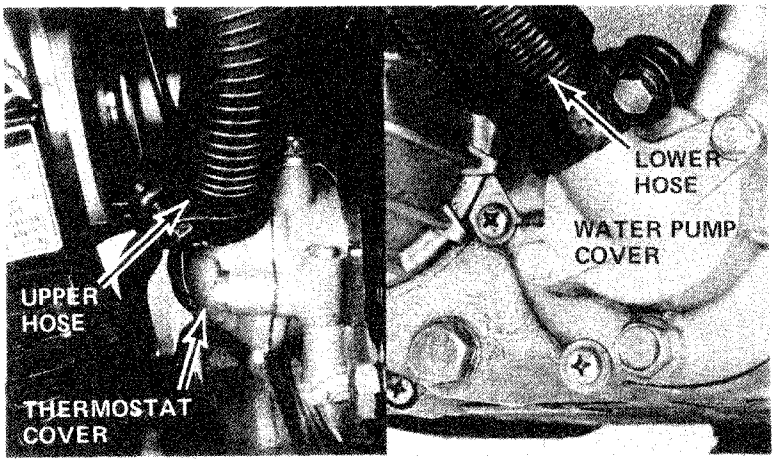

© 1976 American Honda Motor Co., Inc.
Printed in U.S.A. 7-78

ENGINE REMOVAL & INSTALLATION
REMOVAL

Disconnect the fan wires at the connector and remove the radiator frame bolts. Lift out the radiator and fan assembly as a unit.

CAUTION

Handle the radiator with care. The radiator fins can easily be damaged.

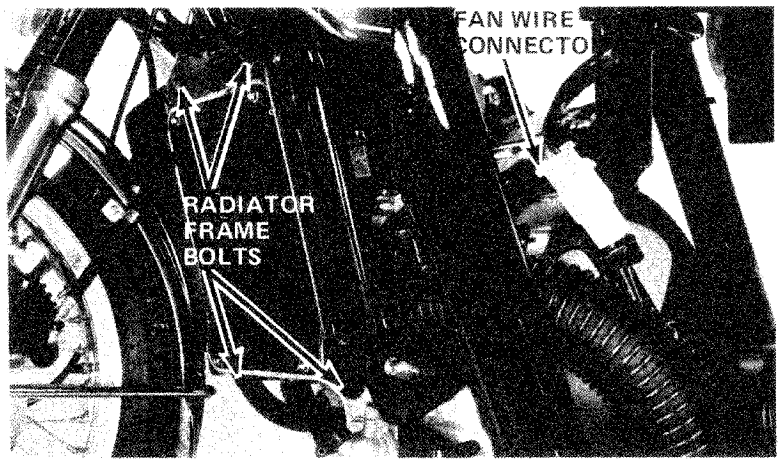

Wiring Harness Uncoupling

Open the left side compartment and disconnect the engine sub-wiring harness. Pull the harness clear of the frame.

Spark Plug Wire Removal

Remove the spark plug caps from the spark plugs.

Detach the high tension cables from the clips on the carburetor assembly.

NOTE

If the carburetors are left in the frame, it is not necessary to detach the cables from the carburetors.

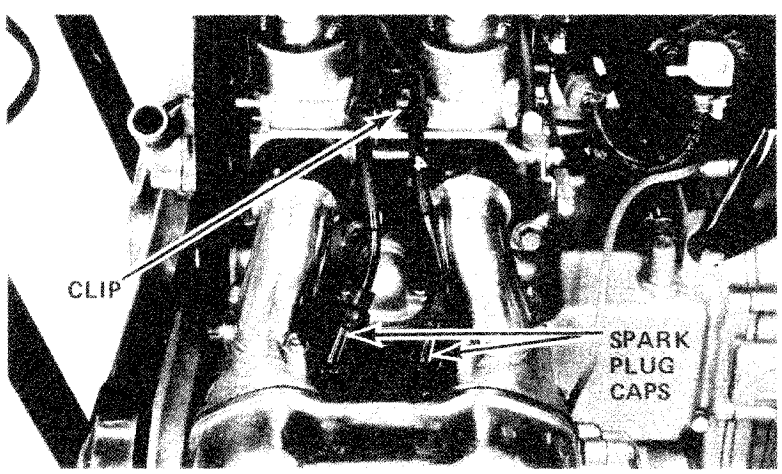

© 1976 American Honda Motor Co., Inc.
Printed in U.S.A. 7-78

NOTE

To save time, the carburetors may be left in the frame. The carburetor assembly can be detached from the cylinder heads at the inlet manifolds and held clear of the engine with a bungee cord. If this is done, the next three steps can be omitted.

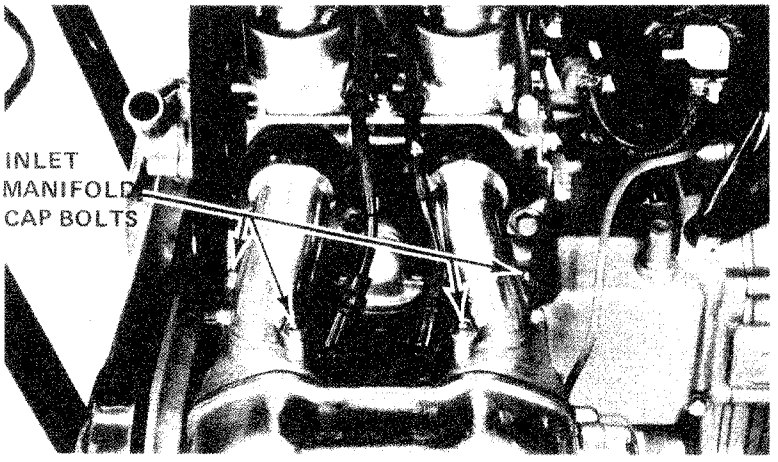

Air Cleaner Case Removal

Open the service compartment and remove the tool tray and the air cleaner cover. Remove the air filter element. Detach the crankcase breather hose. Remove the bolts holding the air cleaner case to the air chamber.

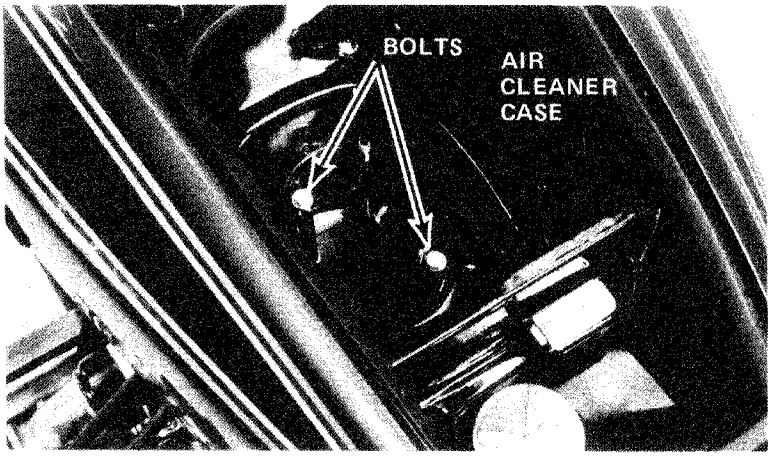

Choke Cable Removal

Remove the choke cable from the clamp and disconnect the cable end from the carburetor link.

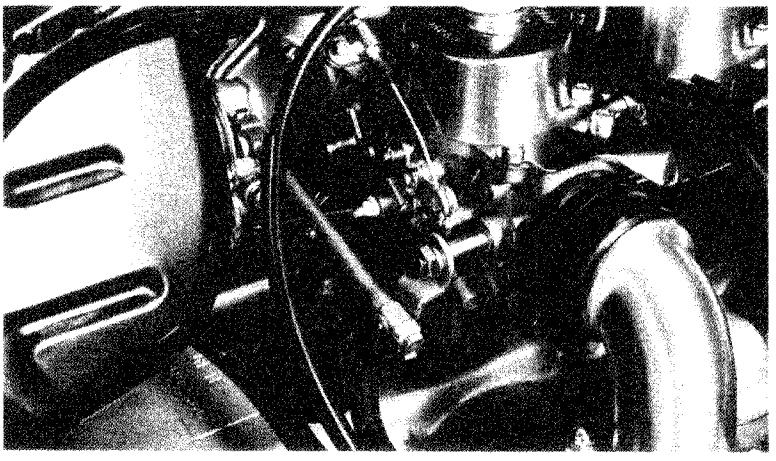

© 1976 American Honda Motor Co., Inc.
Printed in U.S.A. 7-76

ENGINE REMOVAL & INSTALLATION
REMOVAL

Throttle Cable Removal

Loosen the throttle cables at the lower adjuster and remove the cable ends from the bellcrank.

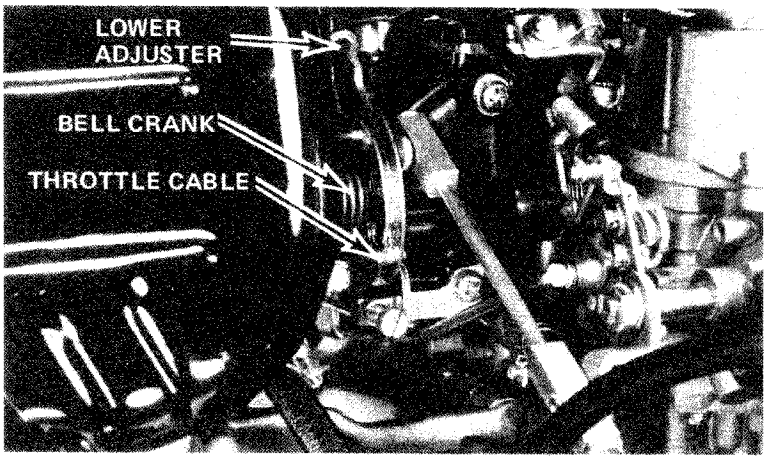

Fuel Pump Outlet Hose Removal

Set the fuel cock in the OFF position and detach the two hoses at the fuel pump.

WARNING

Catch excess fuel in a well marked gasoline container. Wipe up fuel spills promptly and place gasoline soaked rags in an approved safety container. Keep away from spark or flame.

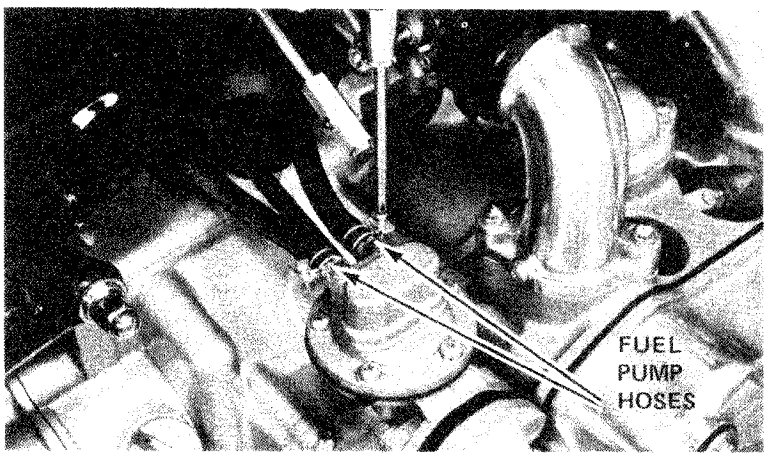

© 1976 American Honda Motor Co., Inc.
Printed in U.S.A. 7-78

Clutch Cable Removal

Remove the clutch lifter access plate. Loosen the cable at the lower adjuster and remove the cable end at the lifter. Pull the cable free of the engine.

Detach the crankcase breather hose.

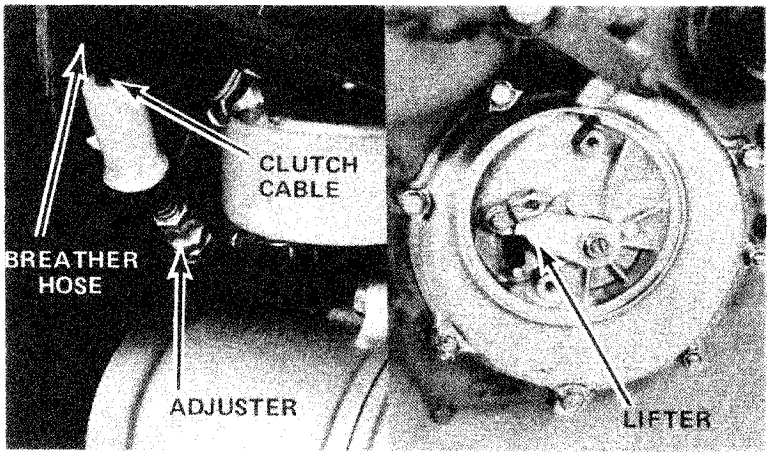

Fan Shroud Removal

Remove the top and bottom fan shroud bolts and remove the shroud.

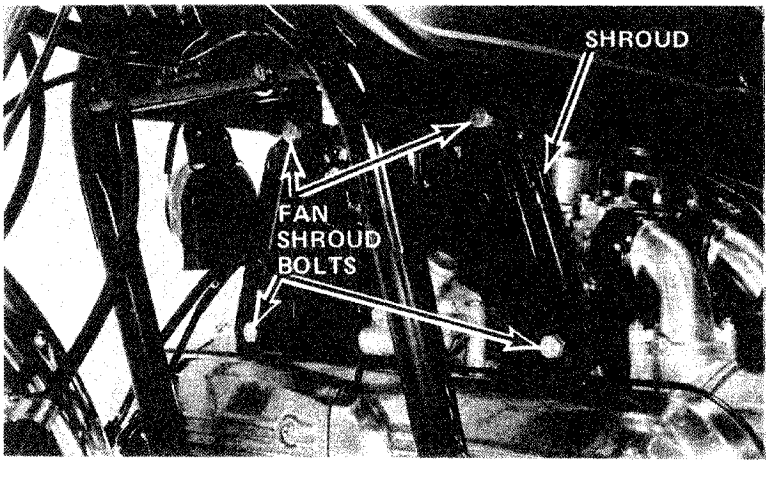

Driveshaft Snap Ring

Move the rubber boot to expose the U-joint assembly. Remove the snap ring and push the U-joint assembly rearward.

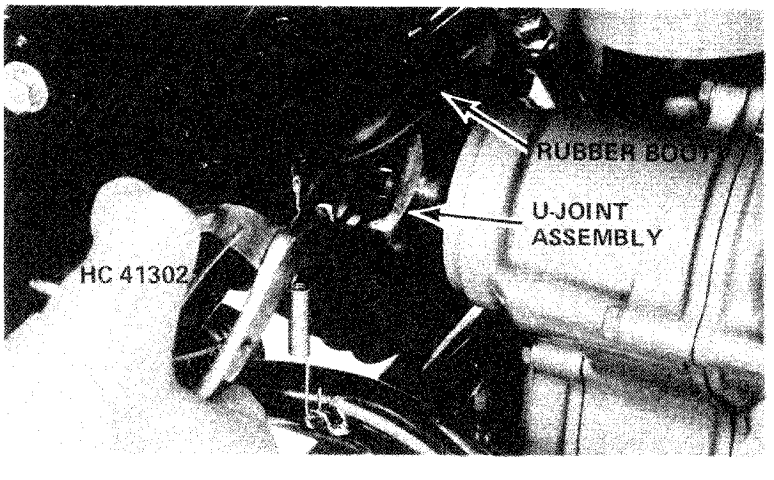

© 1976 American Honda Motor Co., Inc.
Printed in U.S.A. 7-78

ENGINE REMOVAL & INSTALLATION
REMOVAL

Sub-Frame Tube Removal

Place a jack under the engine.

Remove the front mount bolt.

Remove the rear mount bolts. (R & L)

Remove the four nuts holding the lower left-hand sub-frame in place. Raise the jack until the frame is free.

Remove the sub-frame tube.

CAUTION

Jack height must be continuously adjusted during engine removal and installation to prevent damage to mounting bolt threads, wire harnesses and cables.

Remove the upper engine hanger bolt and hanger brackets. (R & L)

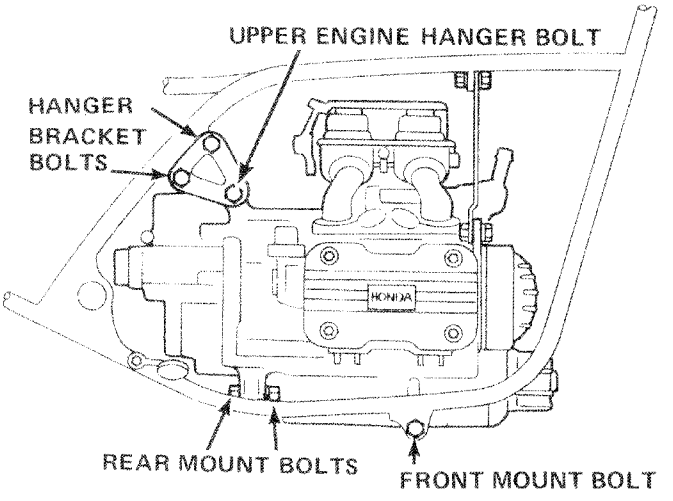

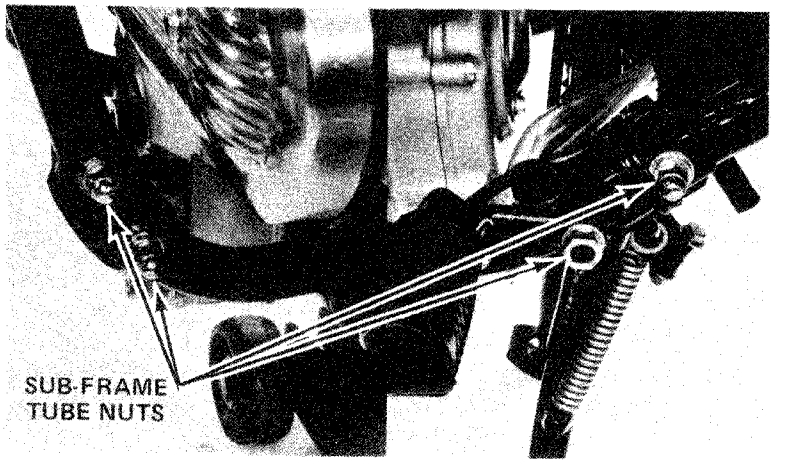

Engine Removal

NOTE

To disengage the output shaft from the U-joint assembly, adjust the jack and move the engine forward. Separate the engine from the frame and remove it to the left.

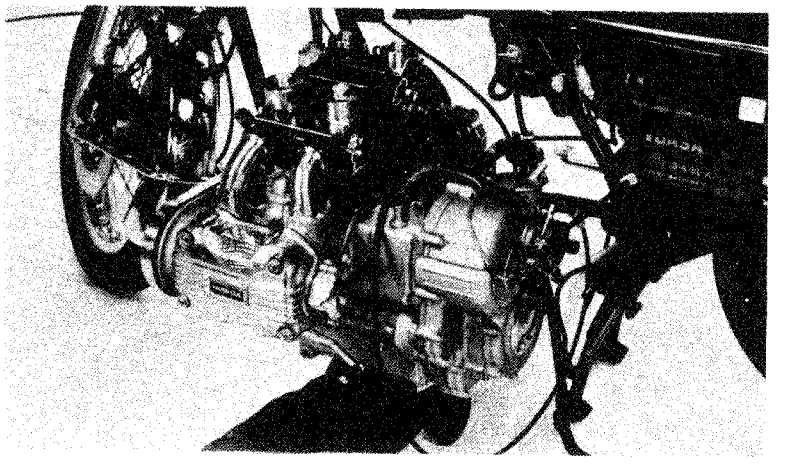

© 1976 American Honda Motor Co., Inc.
Printed in U.S.A. 7-78

INSTALLATION

Engine Installation

The installation sequence is essentially the reverse of removal.

Grease splines before installation.

NOTE

The output shaft and U-joint must be joined as the engine is maneuvered into the frame. This connection cannot be made once the mounting bolts are in place.

Snap Ring Installation

Slide the U-joint forward on the output shaft and install the snap ring.

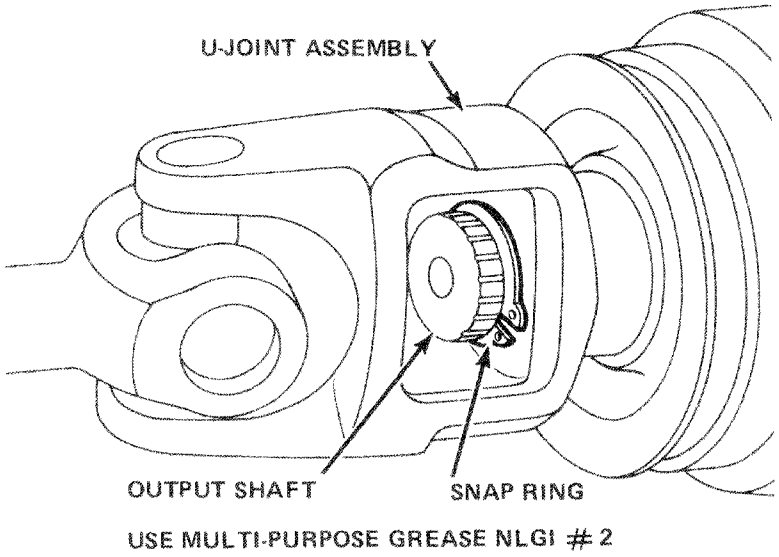

Engine Mount Installation

CAUTION

Carefully align the mounting surfaces with the engine jack to prevent damage to mounting bolt threads, wire harnesses and cables.

Install and lightly tighten the engine mounts in the following sequence:

1. Rear frame-tube nut
2. Front and rear frame-tube cap nuts
3. Right rear engine mounting bolt
   Left rear engine mounting bolt
4. Front engine mounting bolt
5. Upper engine bracket mounting bolts
6. Upper engine hanger bolt
7. Lower shroud bolts
8. Upper shroud bolts

Torque them in the same sequence.

1. 3.0 to 4.0 kg-m (22 to 29 ft-lb)
2. 2.5 to 2.9 kg-m (18 to 21 ft-lb)
3. 5.5 to 6.5 kg-m (40 to 47 ft-lb)
4. 5.5 to 6.0 kg-m (40 to 43 ft-lb)
5. 2.5 to 2.9 kg-m (18 to 21 ft-lb)
6. 3.0 to 4.0 kg-m (22 to 29 ft-lb)
7. 3.0 to 4.0 kg-m (22 to 29 ft-lb)
8. 3.0 to 4.0 kg-m (22 to 29 ft-lb)

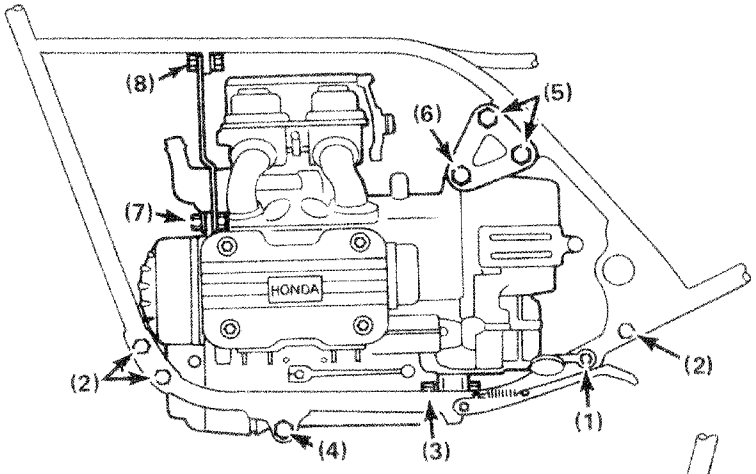

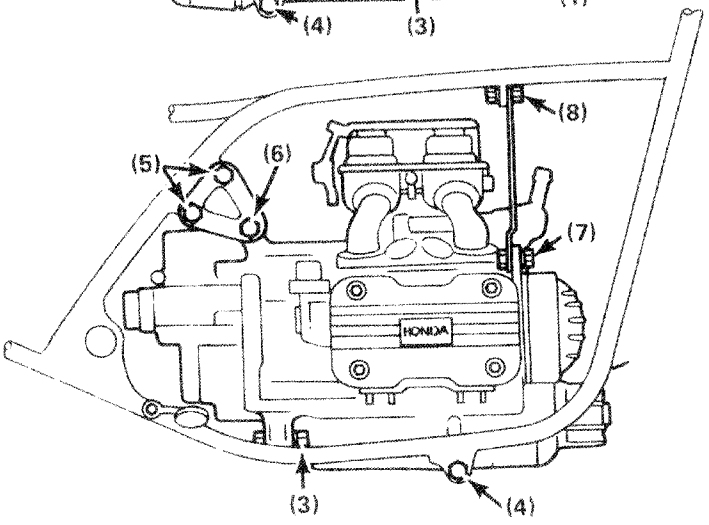

© 1976 American Honda Motor Co., Inc.
Printed in U.S.A. 7-78

Installation and Connection of Parts Removed

Install the following parts in the order listed:

1. Starter motor cable
2. Clutch cable
3. Tachometer cable
4. Fuel pump hose
5. Tachometer gearbox and fuel pump (if removed)
6. Throttle cable (if removed)
7. Choke cable (if removed)
8. Carburetor assembly (if left in frame)
9. Wiring harness connections in left side service compartment
10. Air cleaner assembly
11. Crankcase breather hose
12. Spark plug wires
13. Radiator assembly, including hoses and fan wires
14. Alternator connector
15. Breaker point wires
16. Negative battery terminal
17. Exhaust system
18. Be sure that the oil filter center bolt, crankcase drain plug, and radiator drain plug are installed and torqued.
19. Radiator reserve tank cap and return line

Clutch Adjustment

Adjust the clutch as described in Section 10.

Throttle Free-Play Adjustment

Adjust the throttle cable to provide 15 degrees free-play at the hand grip.

Crankcase and Radiator Servicing

Fill the crankcase with engine oil and the radiator with coolant as described in Sections 7 and 8.

© 1976 American Honda Motor Co., Inc.
Printed in U.S.A. 7-78

NOTE

Inspect wiring harnesses and cables for proper routing and security.

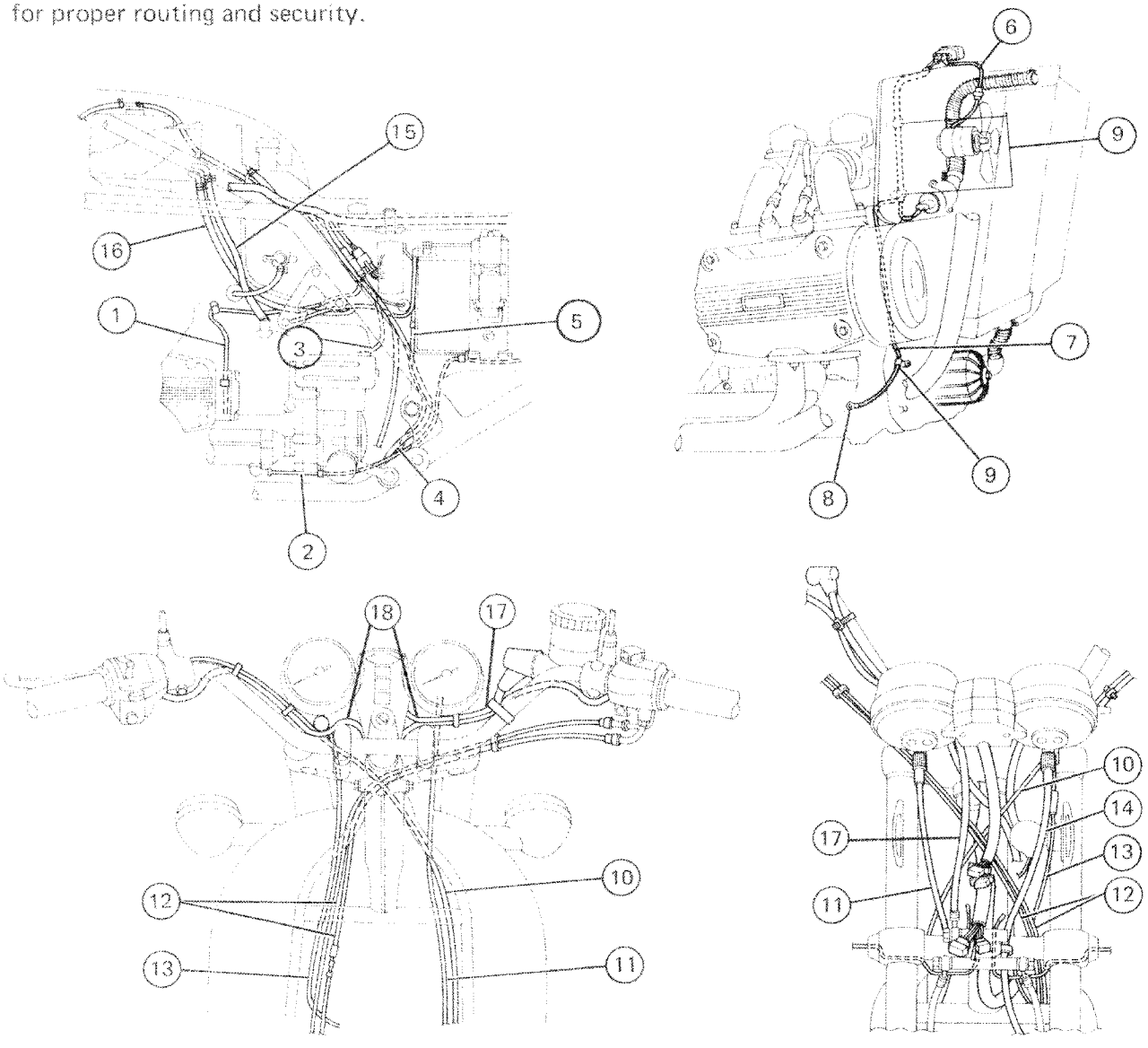

(1) Contact Breaker Lead
(2) Starter Motor Cable
(3) A.C. Generator Cable
(4) Fuel Filler Overflow Tube
(5) Battery Over Flow Tube
(6) Fan Motor Lead
(7) Engine Sub Wire Harness
(8) Neutral Switch
(9) Clamp
(10) Clutch Cable
(11) Tachometer Cable
(12) Throttle Cable
(13) Choke Cable
(14) Speedometer Cable
(15) Breather Tube A (1978, 1979)
(16) Breather Tube B (1978, 1979)
(17) Front Brake Wire
(18) Switch Wires

© 1978 American Honda Motor Co., Inc.
Printed in U.S.A. 7-78

5 ENGINE TOP END REPAIR

5

SERVICE INFORMATION 5-2
TROUBLESHOOTING 5-6
TIMING BELT REMOVAL 5-7
CAMSHAFT AND ROCKER ARM REMOVAL 5-9
CYLINDER HEAD REMOVAL 5-12
VALVE AND GUIDE INSPECTION 5-15
VALVE GUIDE REPLACEMENT 5-16
VALVE SEAT INSPECTION AND GRINDING 5-17
CYLINDER HEAD ASSEMBLY 5-18
CYLINDER HEAD INSTALLATION 5-19

© 1976 American Honda Motor Co., Inc.

Printed in U.S.A. 7-78

SERVICE INFORMATION

Specifications

Compression Pressure (COLD): 171 PSI (12 kg/sq-cm)

Camshafts	1975 - 1977	1978 - 1979
Intake opens:	5 degrees BTDC	5 degrees BTDC
Intake closes:	50 degrees ABDC	35 degrees ABDC
Exhaust opens:	50 degrees BBDC	40 degrees BBDC
Exhaust closes:	5 degrees ATDC	5 degrees ATDC

Camshaft lobe base circle: 29.98 to 30.02 mm (1.180 - 1.181 in)
Service limit: 29.93 mm (1.178 in)
Intake lift: 37.07 to 37.23 mm (1.459 - 1.4657 in) — 36.72 to 36.88 mm (1.445 - 1.452 in)
Service limit: 36.8 mm (1.448 in) — 36.5 mm (1.437 in)
Exhaust lift: 36.72 to 36.88 mm (1.445 - 1.4519 in)
Service limit: 36.5 mm (1.437 in)
Camshaft ends:
Journal OD: 26.954 to 26.970 mm (1.061 - 1.062 in)
Service limit: 26.91 mm (1.059 in)
Bearing ID: 27.00 to 27.021 mm (1.063 - 1.064 in)
Service limit: 27.05 mm (1.064 in)
Bearing clearance: .040 to .077 mm (0.0015 - 0.0030 in)
Camshaft center:
Journal OD: 24.954 to 24.970 mm (0.982 - 0.983 in)
Service limit: 24.91 mm (.980 in)
Bearing ID: 25.00 to 25.021 mm (0.984 - 0.985 in)
Service limit: 25.05 mm (0.986 in)
Bearing clearance: .050 to .087 mm (0.0019 - 0.0034 in)

Rocker Arms and Shafts
Rocker arm ID: 14.00 to 14.018 mm (0.551 - 0.552 in)
Service limit: 14.05 mm (0.553 in)
Rocker shaft OD: 13.966 to 13.984 mm (0.550 - 0.551 in)
Service limit: 13.94 mm (0.549 in)
Camshaft holder rocker shaft hole ID: 14.00 to 14.018 mm (0.551 - 0.552 in)
Service limit: 14.05 mm (0.553 in)

Valve Tappet Clearance
Intake and exhaust: 0.1 mm (0.004 in) COLD

© 1978 American Honda Motor Co., Inc.
Printed in U.S.A. 7-78

ENGINE TOP END REPAIR SERVICE INFORMATION

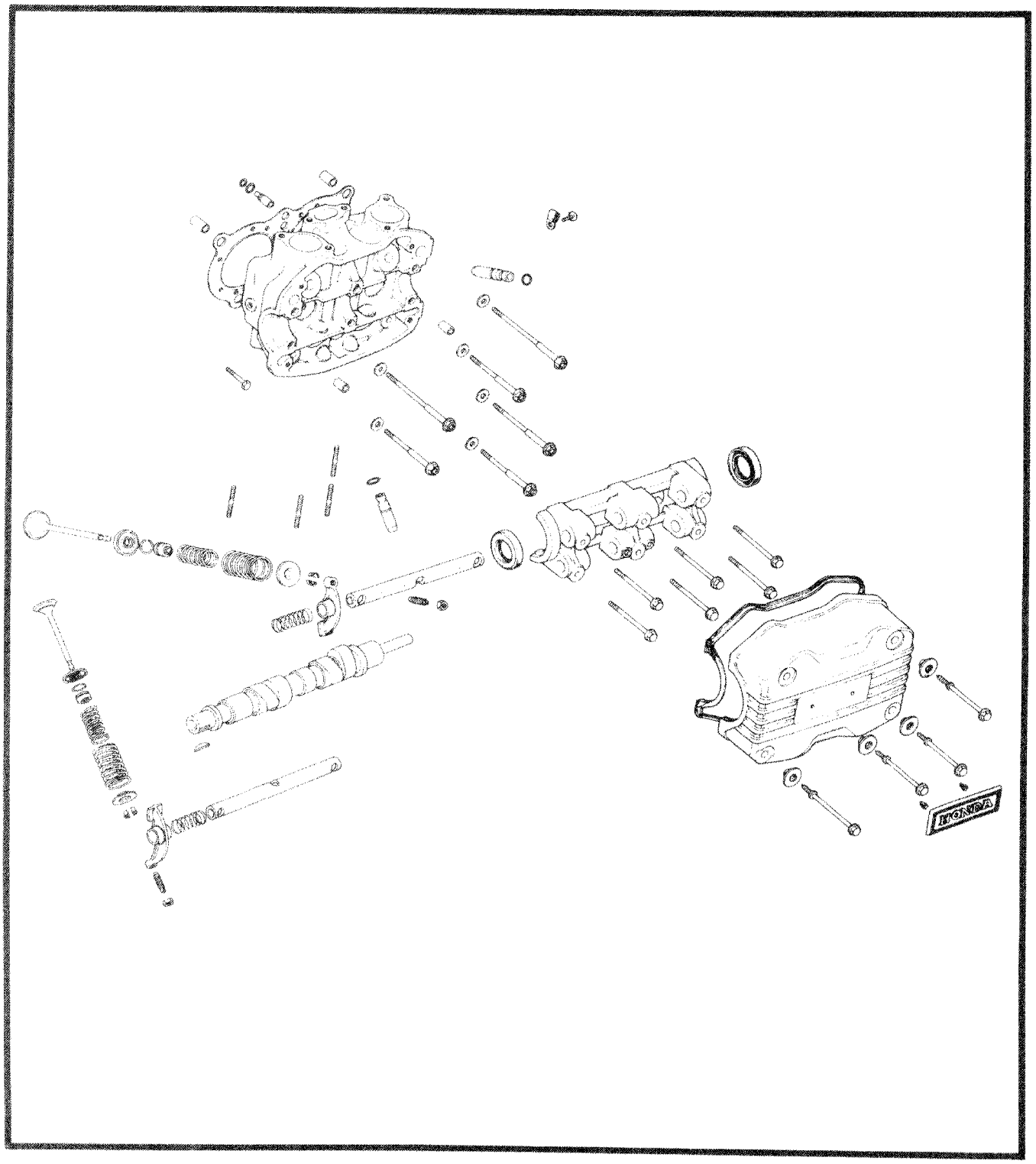

© 1976 American Honda Motor Co., Inc.
Printed in U.S.A. 7-78

Valve Springs

Free length:

Outer: 43.75 mm (1.722 in)

Service limit: 42.5 mm (1.673 in)

Inner: 40.2 mm (1.582 in)

Service limit: 39.0 mm (1.535 in)

Spring force at compressed length:

Outer: 51.5 ± 3.6 kg @ 28 mm (113.5 ± 7.9 lb @ 1.1 in)

Inner: 28.8 ± 2.03 kg @ 26 mm (63.5 ± 4.5 lb @ 1.02 in)

Valves and Guides

Valve stem OD:

Intake: 6.58 to 6.59 mm (0.2591 – 0.2595 in)

Exhaust: 6.55 to 6.56 mm (0.2579–0.2583 in)

Valve guide ID:

Intake or exhaust: 6.60 to 6.62 mm (0.260 - 0.261 in)

Service limit: 6.64 (0.261 in)

Valve-to-Guide clearance:

Intake: 0.01 to 0.04 mm (0.0004 - 0.0016 in)

Service limit: 0.08 mm (0.0031 in)

Exhaust: 0.05 to 0.07 mm (0.0020 - 0.0028 in)

Service limit: 0.10 mm (0.0039 in)

Valve head diameter:

Intake: 38.00 mm (1.496 in)

Exhaust: 32.00 mm (1.260 in)

Valve seat width: 1.4 mm (0.055 in)

Cylinder Head

Warpage across head:

Service limit: 0.10 mm (0.0039 in)

Camshaft Drive Belts

Toothed belt, rubber reinforced with fiberglass

Torque Values

Cylinder head bolts: 530 to 570 kg-cm (38 - 41 ft-lb)

Camshaft holder bolts: 250 to 290 kg-cm (217 - 252 in-lb)

Camshaft drive pulley: 250 to 290 kg-cm (217 - 252 in-lb)

Crankshaft pulley: 500 to 550 kg-cm (36 - 40 ft-lb)

Tappet adjusting nut: 120 to 160 kg-cm (104 - 139 in-lb)

© 1976 American Honda Motor Co., Inc.
Printed in U.S.A. 7-78

ENGINE TOP END REPAIR SERVICE INFORMATION

Working Practice

All cylinder head maintenance and inspection can be accomplished with the engine in frame.

Camshaft lubricating oil is fed to each cylinder head through an oil control orifice located in the engine case. Be sure these orifices are not clogged and that the O-rings and dowel pins are in place before installing the cylinder heads.

Care should be taken to prevent the camshaft drive belts from becoming contaminated with oil, which will cause the rubber to swell and affect the camshaft timing. Do not twist the belts, or bend them to a radius of less than 25 mm, to avoid possible fracture of the fiberglass material.

Tools and Materials

Valve Spring Compressor HC 40953
Valve Guide Remover/Installer HC 48721
Valve Guide Reamer HC 48726
Valve Seat Grinder
Tappet Adjustment Wrench HC 26250
Timing Pulley Holder HC 41307
Torque Wrench 0 - 350 kg-cm (0 - 300 in-lb)
Torque Wrench 0 - 25 kg-m (0 - 150 ft-lb)
Vernier Caliper 0-200 mm HC 20657
Feeler Gauge Set HC 06241
Inside Micrometer or Ball Gauge 5-7 mm
Micrometer 0-25 mm HC 11885
Standard Mechanics' Wrenches
Molybdenum Disulphide
Three Bond #4 Sealer (Cylinder Head)
Lubriplate Assembly Grease (Camshaft Bearings)
Valve Lapping Compound
Machinists' Dye
Plastigauge
Prussian Blue

© 1978 American Honda Motor Co., Inc.
Printed in U.S.A. 7-78

TROUBLESHOOTING

Engine top-end troubles are usually performance problems which can be diagnosed by a compression test, or noise problems which can be traced to the top-end of the engine with a sounding rod or stethoscope.

Low Compression or Uneven Compression

1. Valve troubles
   - Incorrect tappet adjustment
   - Burned or bent valves
   - Incorrect valve timing
   - Sticking valve
   - Broken valve spring
2. Cylinder head troubles
   - Leaking or damaged head gasket
   - Warped or cracked cylinder head
3. Camshaft troubles
   - Worn or damaged timing belt
   - Loose pulley or drive key
   - Worn or damaged belt tensioner pulley
4. Engine lower end problems - See Section 6

Compression Too High (over 14 kg/sq-cm, 199 psi)

1. Excessive carbon build-up on piston head or combustion chamber.

Excessive Noise

1. Incorrect tappet adjustment
2. Sticking valve or broken valve spring
3. Damaged rocker arm or camshaft
4. Loose or damaged camshaft drive belt
5. Loose or damaged drive belt tensioners or drive pulleys

Contaminated Engine Oil or Coolant

1. Leaking or blown head gasket
2. Leaking core plugs - See Section 7
3. Damaged or warped cylinder head

© 1976 American Honda Motor Co., Inc.
Printed in U.S.A. 7-78

TIMING BELT REMOVAL

Timing Belt Removal

Remove the timing belt covers.

NOTE

Engine removal or fan and radiator assembly removal is not necessary for top end repair.

Loosen bottom radiator mounting bolts to facilitate removal of timing belt cover bolts.

Turn the alternator rotor bolt clockwise until the T-1 mark on the flywheel lines up with the case index mark. Check the alignment of the cam pulley arrows and the cover index marks.

Mark each belt with an arrow to indicate the direction of rotation and a letter to indicate right or left side.

Mark the crankshaft pulley with tape or chalk to indicate T.D.C. compression on #1 cylinder.

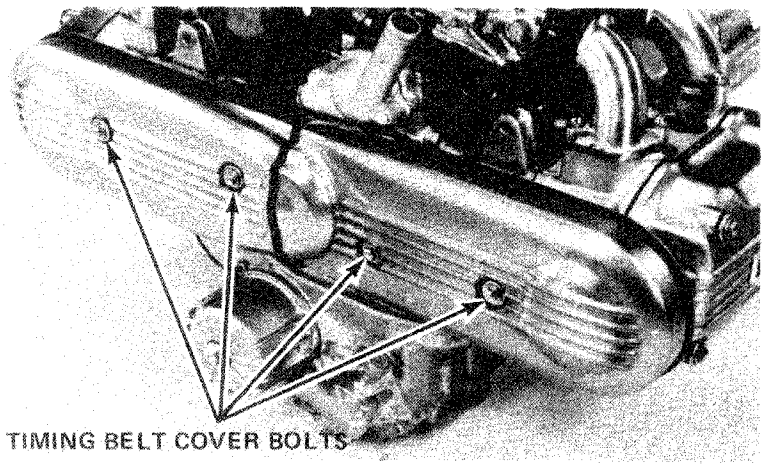

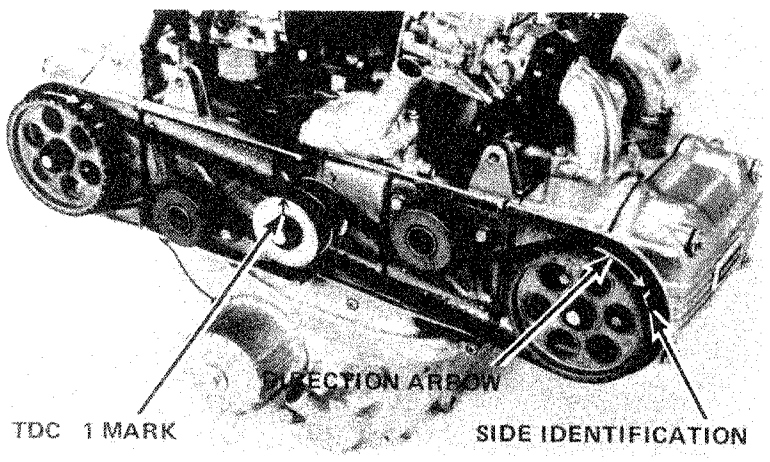

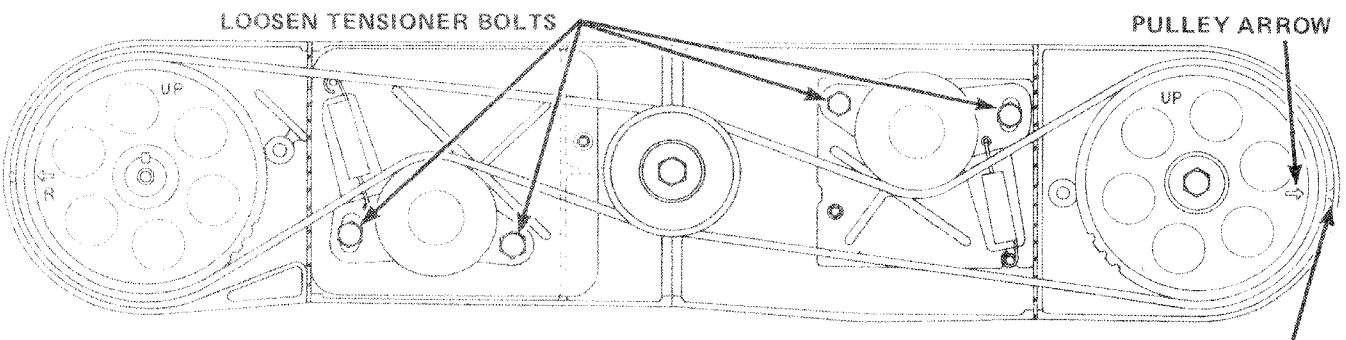

MOVE TENSIONER ROLLERS AWAY FROM BELTS AND RETIGHTEN BOLTS.
Remove the belts.

CAUTION

To prevent damage to the belt material, do not use a screwdriver or other sharp instrument for removal.

© 1976 American Honda Motor Co., Inc.
Printed in U.S.A. 7-78

Belt Inspection

NOTE

Check belts for evidence of swelling caused by oil contamination. Replace belts if material is cracked, teeth are worn, or swelling is evident.

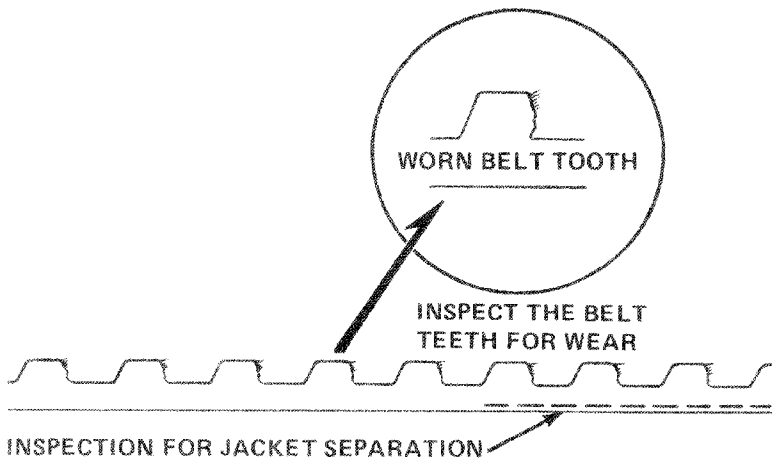

Inspect the belt tensioners for freedom of operation and condition.

CAUTION

Do not lubricate the tension rollers. Oil will damage the drive belts. To protect the sealed tensioner bearings, do not use solvent or other cleaning agents inside the front case.

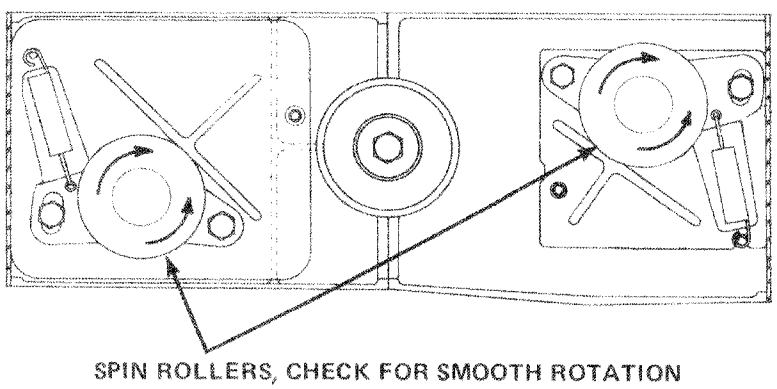

CAUTION

When the timing belts have been removed and #1 cylinder is at T.D.C., it is possible to rotate the camshaft and valves to a position of interference between valves and piston domes.

To avoid damage to engine components, move pistons away from T.D.C. by rotating the crankshaft 90° in either direction from T.D.C. as indicated by the tape or chalk mark on the crankshaft pulley.

Use the generator rotor bolt to rotate the engine in either direction. Do not use the crankshaft pulley bolt.

© 1976 American Honda Motor Co., Inc.
Printed in U.S.A. 7-78

CAMSHAFT AND ROCKER ARM REMOVAL

SEE CAUTION NOTE
bottom of page 5-8.

Remove the camshaft drive pulley.

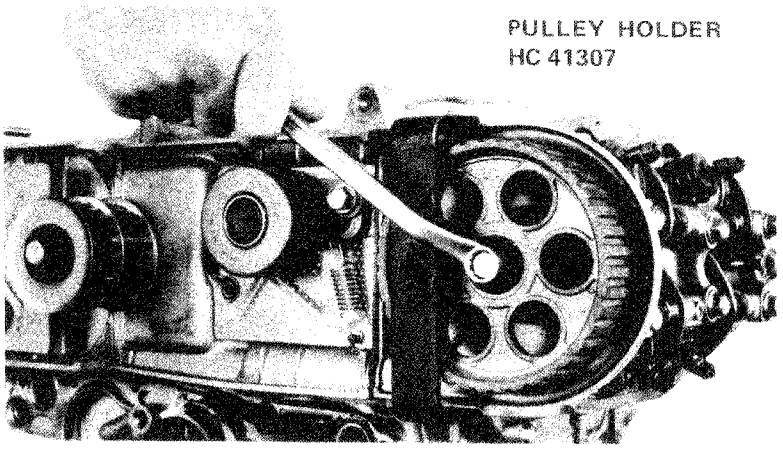

Remove the cylinder head heat shield.

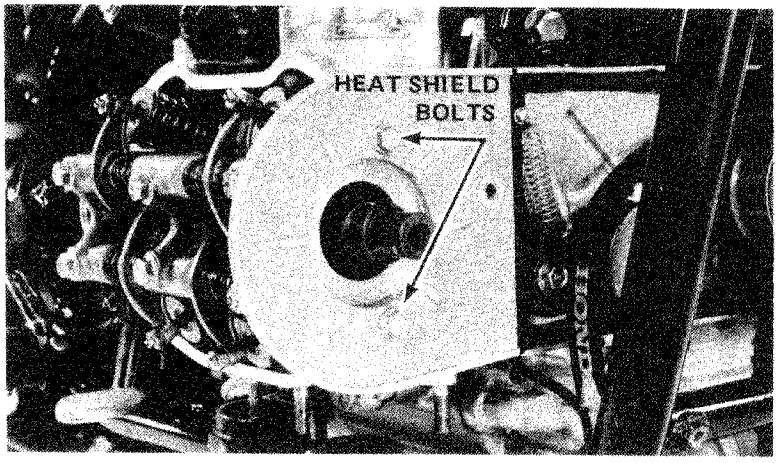

RIGHT HAND HEAD

Remove the fuel pump and tachometer drive gearbox.

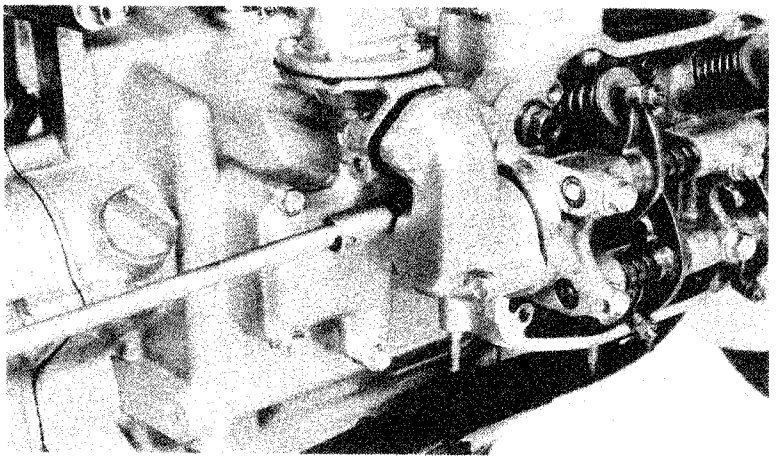

© 1976 American Honda Motor Co., Inc.
Printed in U.S.A. 7-78

LEFT HAND HEAD

Remove the point cover, point plate assembly, advance mechanism and housing.

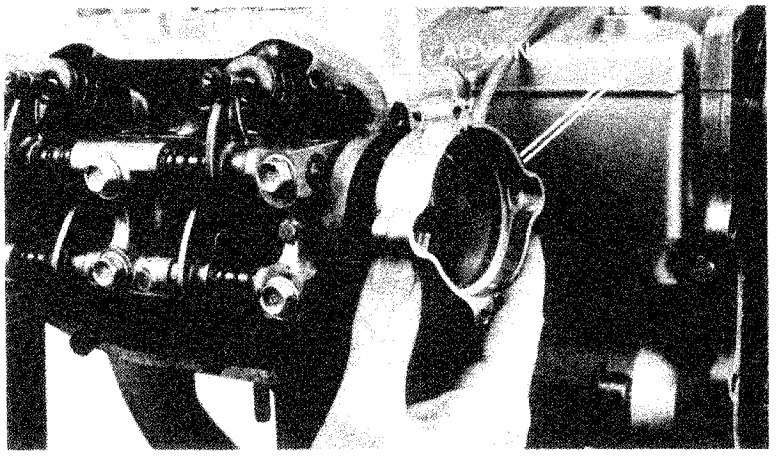

Back off the valve adjuster screws to relieve valve spring pressure from the camshaft.

Remove the six camshaft holder bolts and remove the holder assembly.

NOTE

Mark each holder to identify the side they were on.

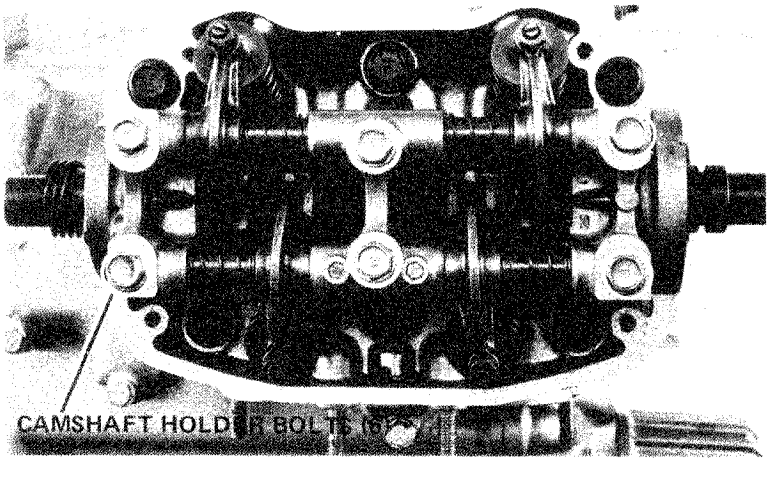

Remove the rocker arm shafts.

NOTE

Observe the letters on the rocker arms. Identify each arm for proper reassembly.

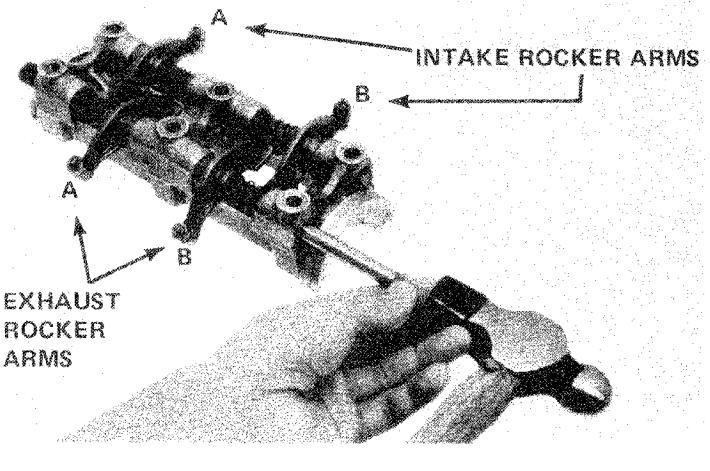

© 1976 American Honda Motor Co., Inc.
Printed in U.S.A. 7-78

ENGINE TOP END REPAIR
CAMSHAFT AND ROCKER ARM REMOVAL

Inspect the rocker shafts, rocker arms and cam holders.

NOTE

If any rocker arms require replacement, inspect the camshaft lobes for scoring, chipping, or flat spots.

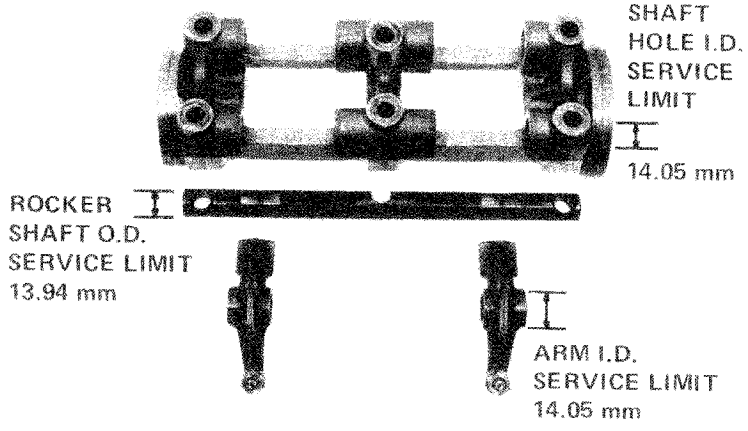

Inspect the cam bearing surfaces for scoring, scratches, or evidence of insufficient lubrication.

Make sure the oil passages are clear.

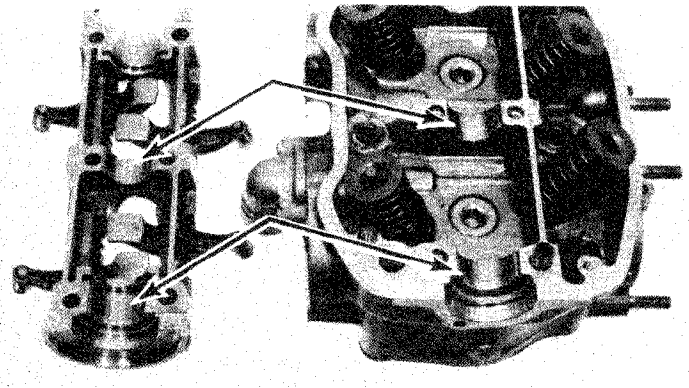

Camshaft Bearing Clearance

Bolt the camshaft holder into place and torque the bolts.

Measure and record the I.D. of each bearing. See page 5-12.

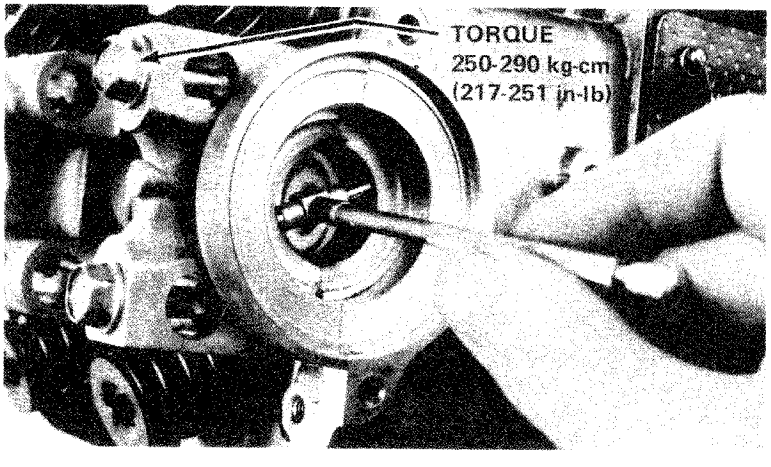

© 1976 American Honda Motor Co., Inc.
Printed in U.S.A. 7-78

Measure and record the O.D. of each camshaft bearing journal.

The difference between the O.D. of a camshaft journal and the I.D. of its cam bearing is the clearance.

NOTE

An acceptable alternate method of checking camshaft clearance is using Plastigauge.

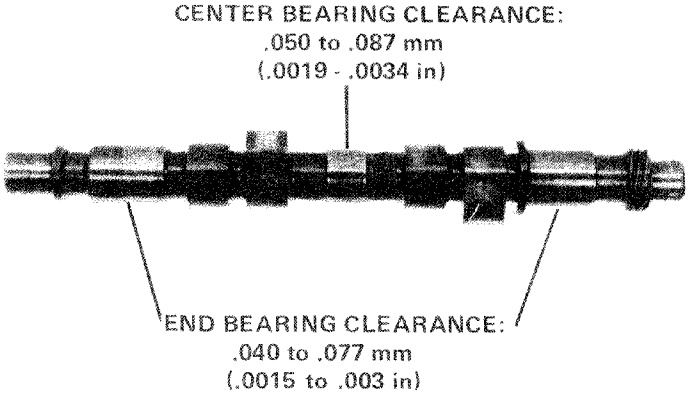

Check each cam lobe for wear with a micrometer. Replace the cam if lobe wear exceeds the service limits.

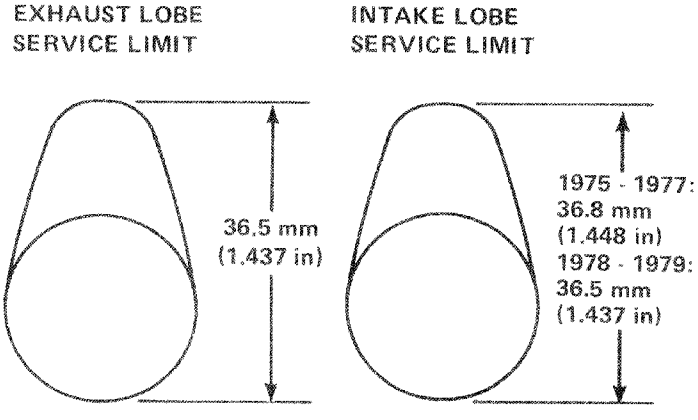

CYLINDER HEAD REMOVAL

CAUTION

Before removing the cylinder heads, drain the coolant. See Section 8.

Remove the intake manifold bolts, exhaust pipe nuts and coolant pipe screws.

Loosen the exhaust clamp and remove the exhaust pipe from the head.

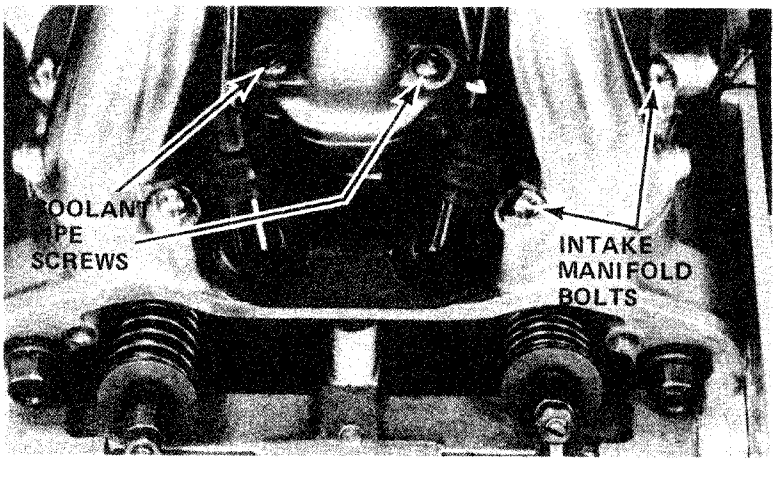

© 1978 American Honda Motor Co., Inc.
Printed in U.S.A. 7-78

ENGINE TOP END REPAIR
CYLINDER HEAD REMOVAL

Remove the cylinder head bolts.

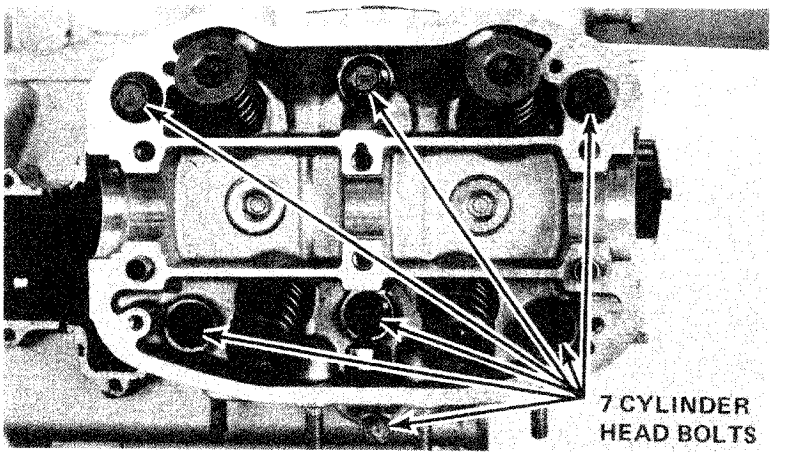

Support the intake manifold and remove cylinder head.

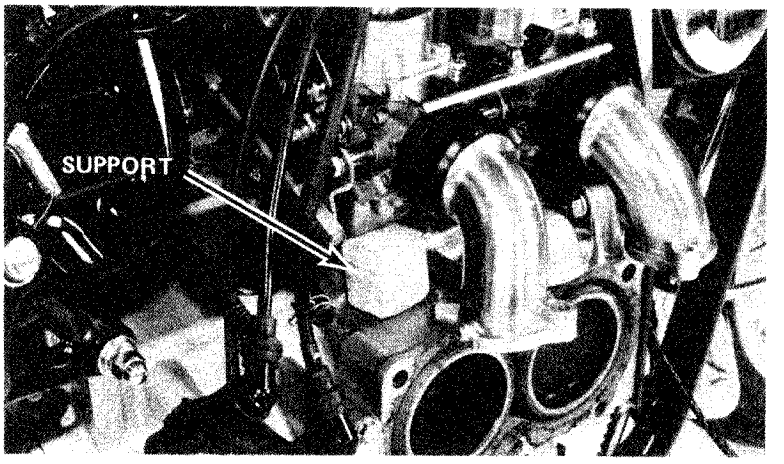

Remove the head gasket dowels and the oil orifice.

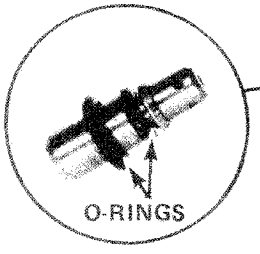

OIL ORIFICE

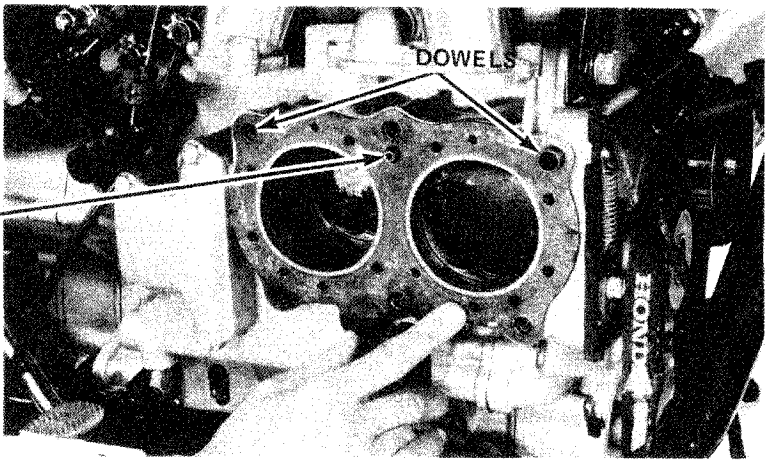

© 1976 American Honda Motor Co., Inc.
Printed in U.S.A. 7-78

CYLINDER HEAD DISASSEMBLY

Remove the valve spring cotters, retainers, springs, and valves.

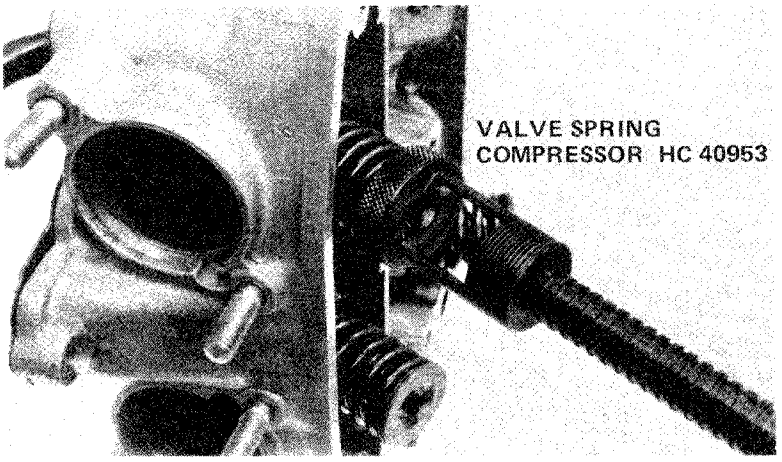

Clean carbon deposits from the combustion chamber.

Check the spark plug hole and valve areas carefully for cracks.

Clean the head gasket surfaces of any gasket material.

NOTE

Gaskets will come off easier if soaked in solvent.

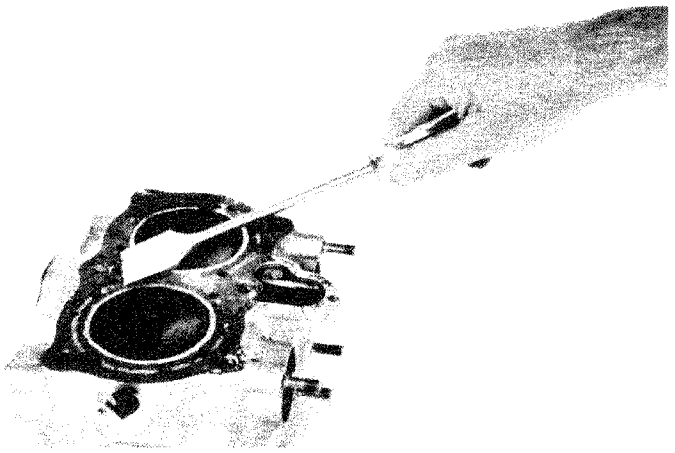

Check the cylinder head for warpage with a straight edge and a feeler gauge.

NOTE

Check for warpage in an X pattern.

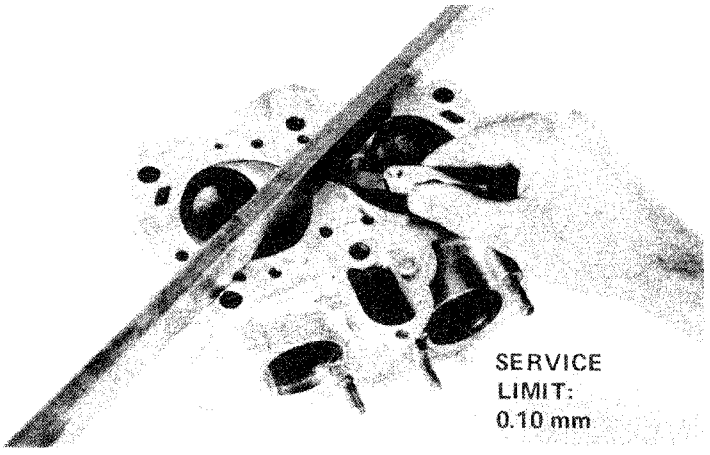

© 1976 American Honda Motor Co., Inc.
Printed in U.S.A. 7-78

VALVE AND GUIDE INSPECTION

Clean valves and inspect.

Measure and record each valve stem O.D.

NOTE

Valve stem service limit should be determined by the clearance between the valve stem and the valve guide.

Check the valve movement in the guide.

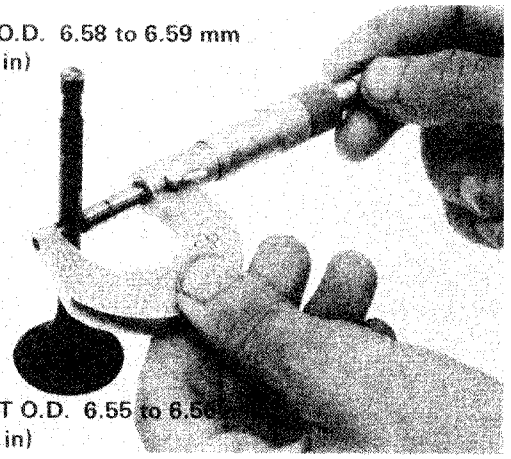

STANDARD INTAKE O.D. 6.58 to 6.59 mm (0.2591 - 0.2595 in)

STANDARD EXHAUST O.D. 6.55 to 6.56 mm (0.2579 - 0.2583 in)

NOTE

Ream the guides to remove any carbon build-up before checking clearance.

Measure and record each valve guide I.D. using a ball gauge or inside micrometer.

Subtract each valve stem O.D. from the corresponding valve guide I.D. to obtain the stem to guide clearance.

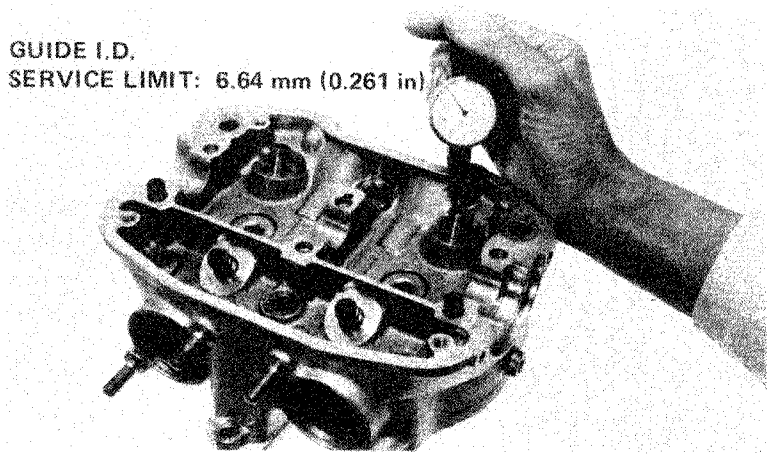

GUIDE I.D.
SERVICE LIMIT: 6.64 mm (0.261 in)

NOTE

If the stem to guide clearance exceeds the service limit, determine if a new guide with standard dimensions would bring the clearance within tolerance. If so, replace any guides as necessary and ream to fit.

If stem-to-guide clearance still exceeds the service limits with new guides, replace the valves and guides.

VALVE STEM-TO-GUIDE CLEARANCE SERVICE LIMITS

INTAKE: 0.08 mm (0.0031 in)
EXHAUST: 0.10 mm (0.0039 in)

© 1976 American Honda Motor Co., Inc.
Printed in U.S.A. 7-78

VALVE GUIDE REPLACEMENT

Heat cylinder head from 80 to 100°C.

WARNING

Use heavy gloves when handling the hot cylinder head.

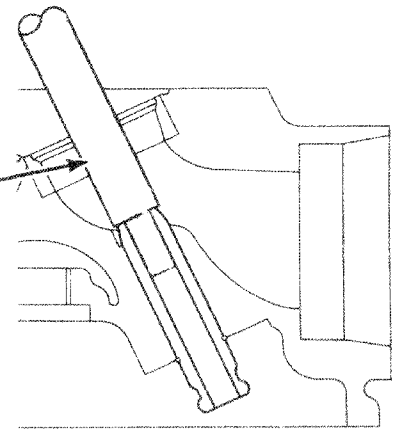

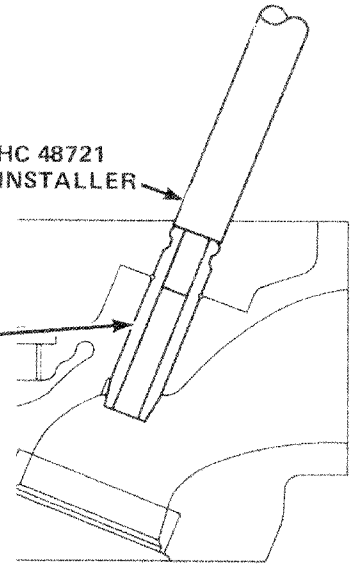

Ream the new valve guides after installation.

NOTE

Use cutting oil on the reamer during this operation.

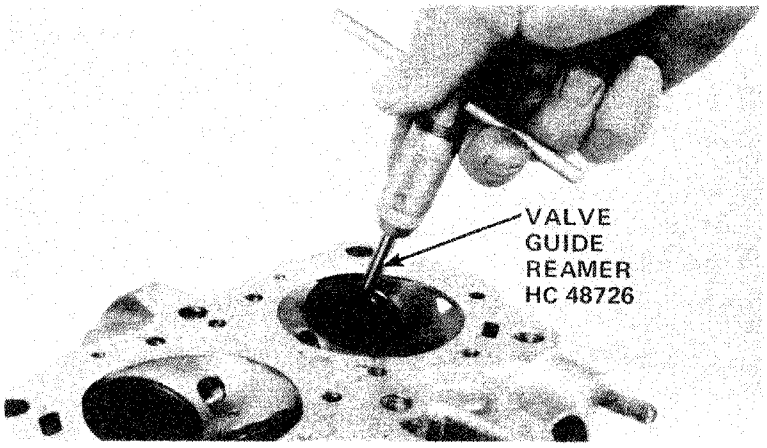

© 1978 American Honda Motor Co., Inc.
Printed in U.S.A. 7-78

VALVE SEAT INSPECTION AND GRINDING

Clean all intake and exhaust valves thoroughly to remove carbon deposits.

Apply a light coating of valve lapping compound to each valve face. Lap each valve and seat using a rubber hose or other hand-lapping tool.

Remove the valve and inspect the face.

NOTE

The valves cannot be ground. If the face is burned or badly worn, replace the valve.

An even matt finish around the seat indicates good valve contact. If the seat is too wide, too narrow or has low spots, the seat must be ground.

NOTE

Follow the refacer manufacturer's operating instructions.

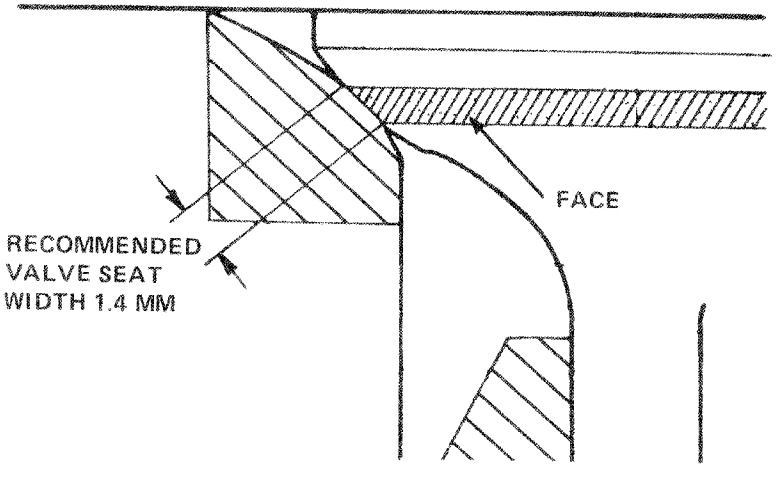

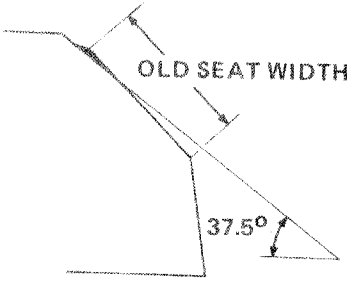

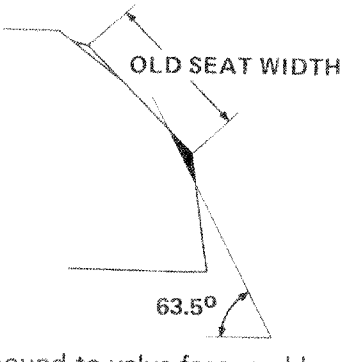

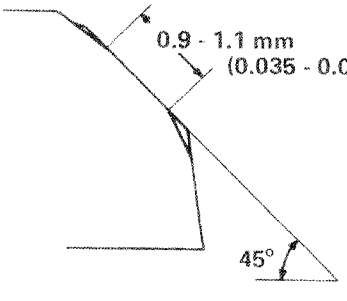

After cutting the seat, apply lapping compound to valve face, and lap the valve using light pressure.

After lapping, wash the cylinder head and valve clean of residual compound. Check valve seat area for complete contact.

© 1978 American Honda Motor Co., Inc.
Printed in U.S.A. 7-78

CYLINDER HEAD ASSEMBLY

Measure the free length of the inner and outer valve springs.

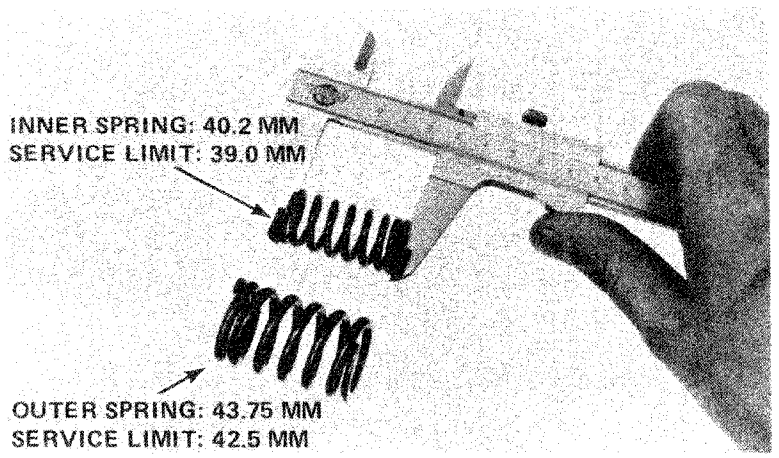

Install the valves, springs, retainers, and cotters.

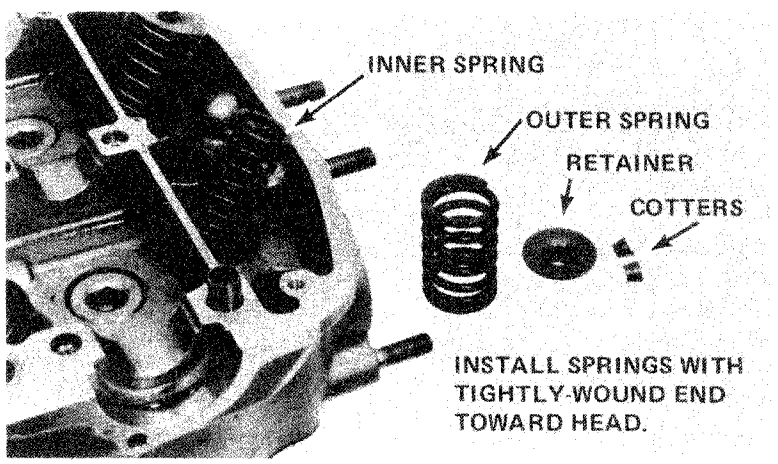

Tape the valve stems gently with a soft hammer to be certain the cotters are firmly seated.

CAUTION

Support the cylinder head above the work bench surface to prevent possible valve damage.

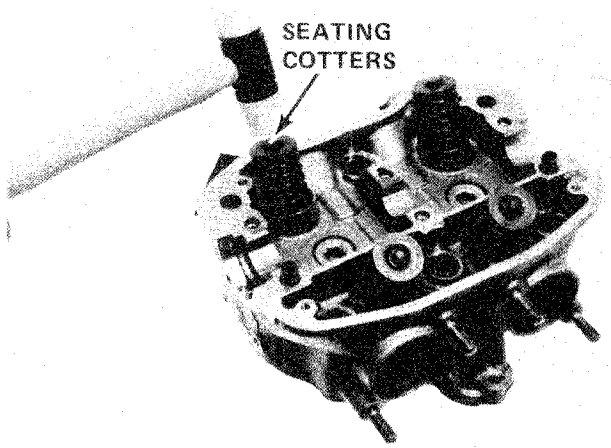

© 1978 American Honda Motor Co., Inc.
Printed in U.S.A. 7-78

Assemble the rocker arms, springs, and shafts. Be sure that the rocker arms are correctly located and the cam holders are on the correct side.

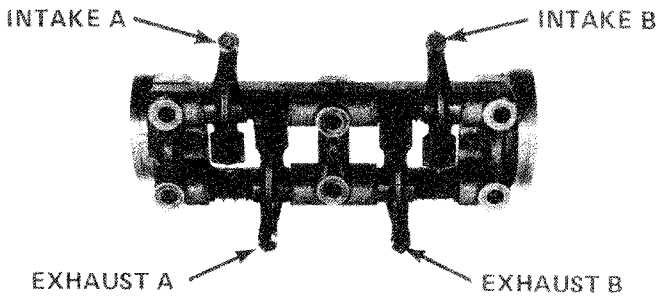

CYLINDER HEAD INSTALLATION

Check the timing mark on the crankshaft to be certain that number 1 cylinder is at TDC on the compression stroke, then rotate it 90°.

See CAUTION note on bottom of page 5-8.

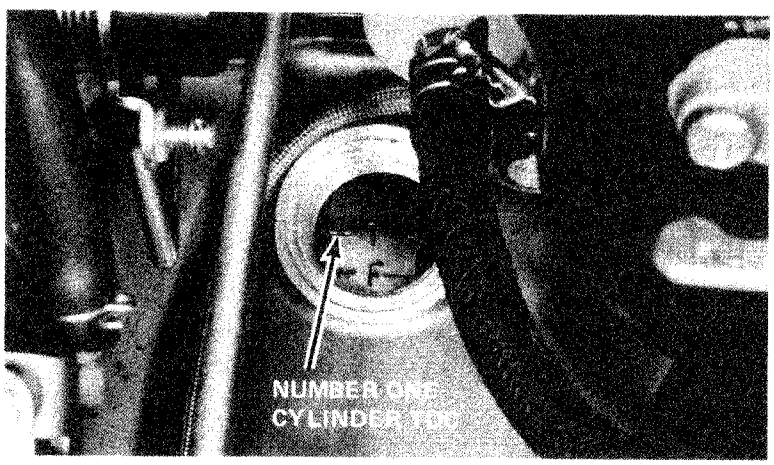

Install the oil orifice, using new o-rings, and insert the head gasket dowels.

Coat the cylinder block and head surfaces with liquid sealer, and install the head gaskets on both sides.

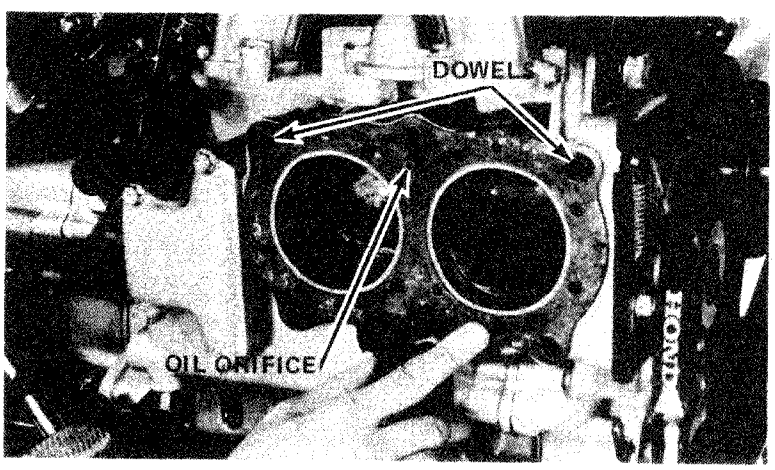

© 1978 American Honda Motor Co., Inc.
Printed in U.S.A. 7-78

Install the cylinder head.

NOTE

Lubricate the bolt threads and underside of the bolt heads with molybdenum disulfide grease.

Torque the six 10 mm bolts first, and torque the 6 mm bolt last.

10 mm 530 to 570 kg-cm (38-41 ft-lb)

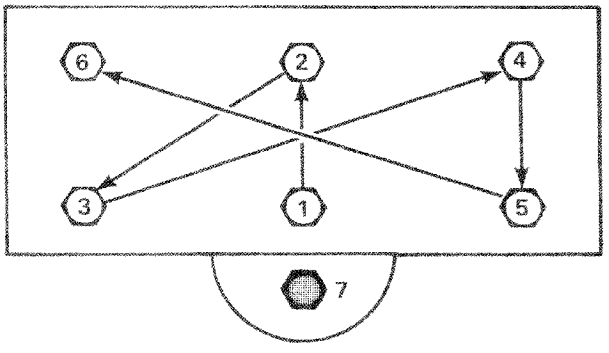

6 mm 100 to 140 kg-cm (84-120 in-lb)

Lubricate the camshaft bearings and lobes, then assemble the camshaft and seals in each head.

Install the camshaft with the tachometer drive gear in the right cylinder head.

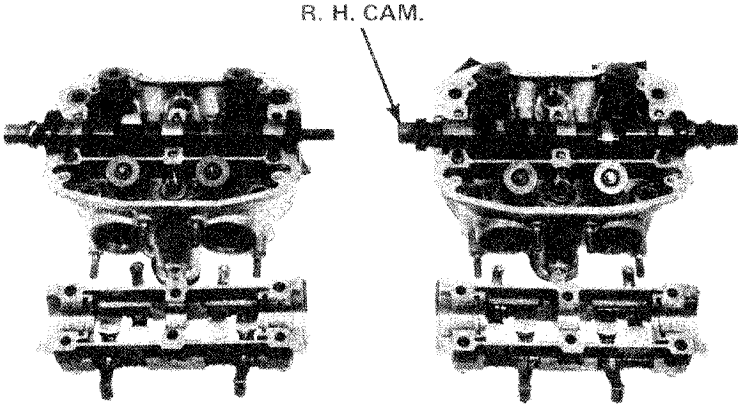

Apply sealer to the cam holder and to cylinder head contact surfaces.

Install the camshaft and holder and torque in the same X pattern as the cylinder head.

NOTE

Clean away excessive sealant.

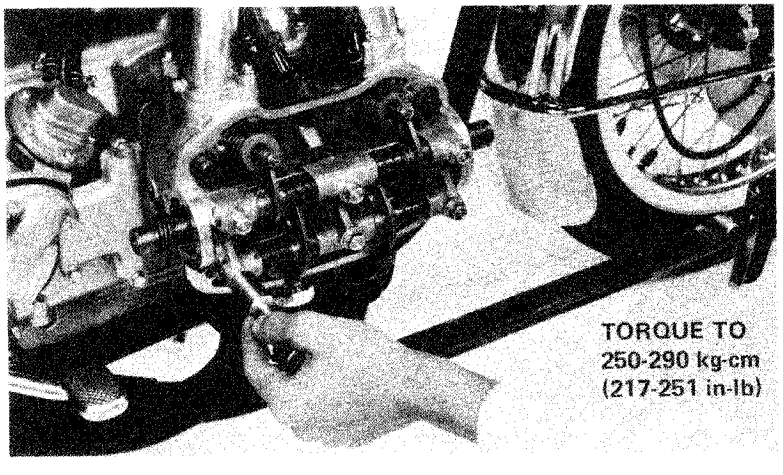

GL-1000 SHOP MANUAL
© 1978 American Honda Motor Co., Inc.
Printed in U.S.A. 7-78

ENGINE TOP END REPAIR
CYLINDER HEAD INSTALLATION

Install the tachometer and fuel pump drive assembly on the right cylinder head.

CAUTION

To prevent damage to the pump shaft, rotate the drive assembly until the fuel pump shaft clears the cam drive lobe and the assembly will seat into the head.

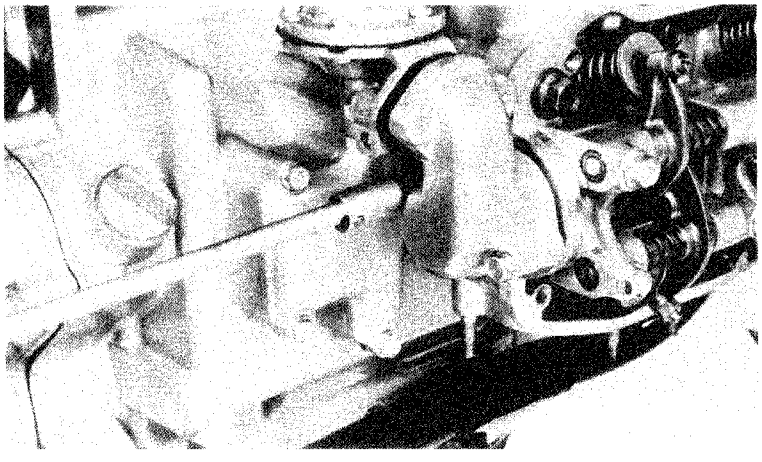

Install the heat shields.

NOTE

To insure proper alignment of the cam belt cover bolt, align the hole with a bolt before torquing the heat shield bolts.

Make sure the neutral wire is behind the right hand heat shield.

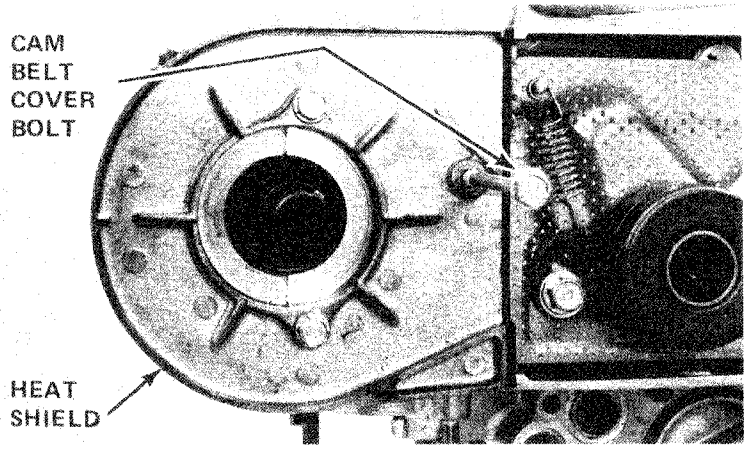

Make sure that both timing belt drive pulleys are tight.

NOTE

If either pulley is loose and the bolt is properly torqued, disassemble and inspect the drive keyway for wear. Replace if necessary.

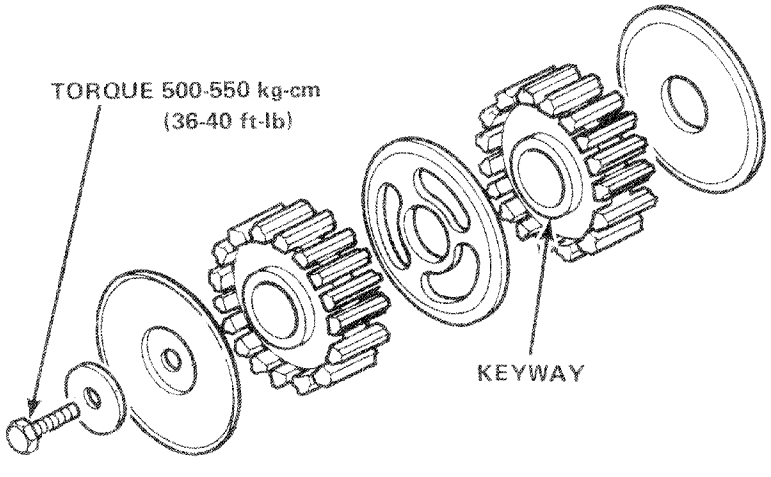

© 1976 American Honda Motor Co., Inc.
Printed in U.S.A. 7-78

CAUTION

When the timing belts have been removed and #1 cylinder is at T.D.C., it is possible to rotate the camshaft and valves to a position of interference between valves and piston domes. To avoid damage to engine components, move pistons away from T.D.C. by rotating the crankshaft 90° in either direction from T.D.C. as indicated by a tape or chalk mark on the crankshaft pulley.

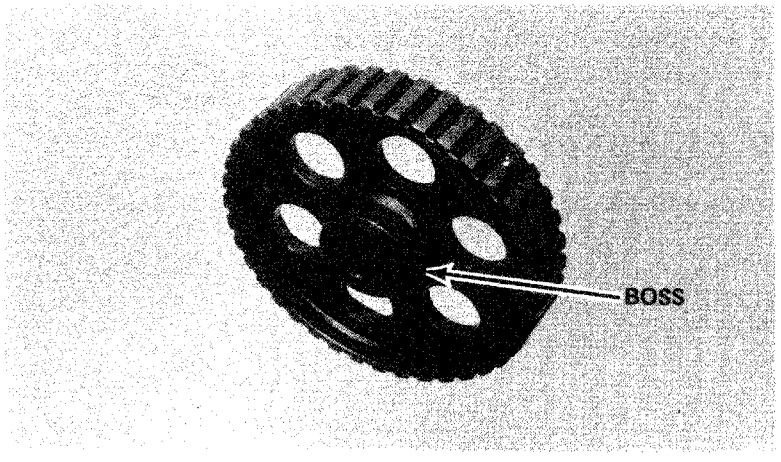

Note the direction of the pulleys. The right pulley should be installed so that the boss is facing outward. On the left side, the boss should face toward the inside.

Rotate the cam pulleys to align the valve timing marks. Return the crankshaft to T.D.C. so the $\frac{1}{T}$ mark is centered. Loosen the tensioner bolts and install the timing belts.

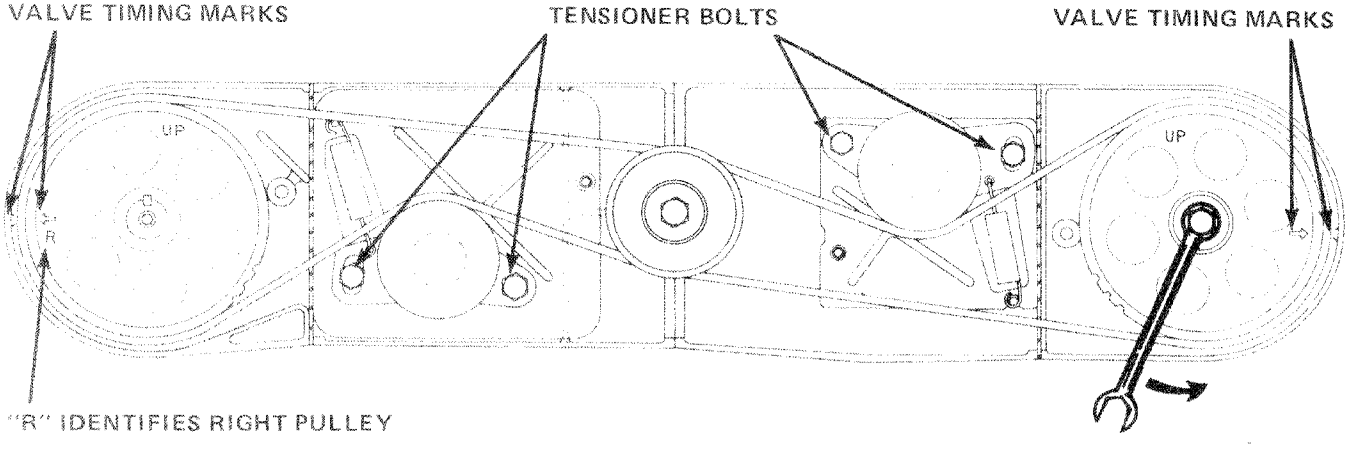

Apply pressure counter-clockwise on the camshaft pulley so the belt will be slack at the tensioner. With the tensioner bolts loosened, the spring pressure automatically positions the tensioner. Tighten the tensioner bolts. Recheck valve timing.

Valve Adjustment

For valve adjustment procedures, refer to Section 3.

© 1976 American Honda Motor Co., Inc.
Printed in U.S.A. 7-78

ENGINE TOP END REPAIR
CYLINDER HEAD INSTALLATION

Point Adjustment

NOTE

This operation is necessary only if the left camshaft has been removed.

Install the point housing, point advance mechanism and point plate in the left cylinder head.

Make sure advancer is installed correctly on the camshaft pin.

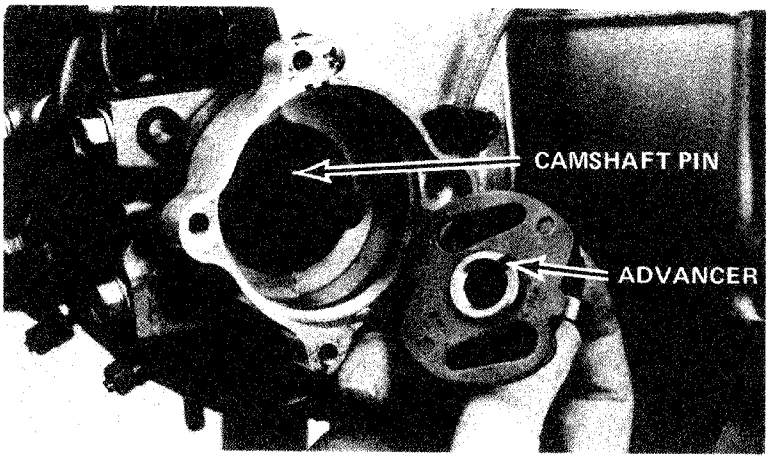

Rotate the engine until the left points are fully open. Align the left point rubbing block with the high spot on the cam.

Loosen the point gap adjustment screws to set points. Recheck gap after tightening.

NOTE

Rotate the engine and repeat the process on the right point. Refer to tune-up Section 3 for timing adjustment using a strobe light.

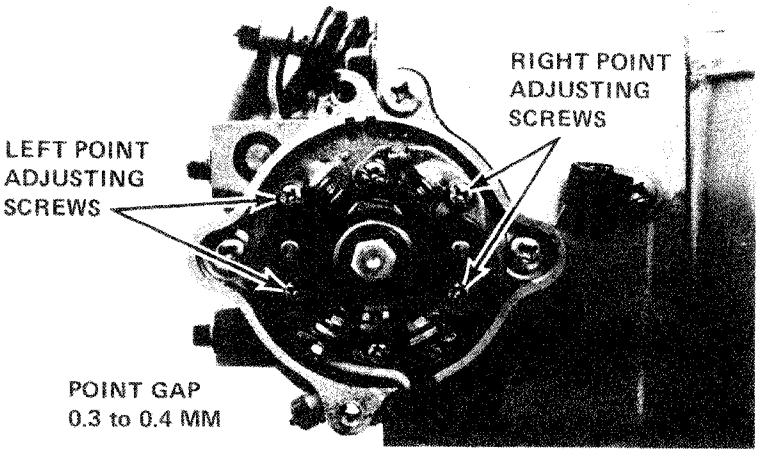

Inspect the condition of the rocker cover seal. Install the valve covers, exhaust pipes, and timing belt covers.

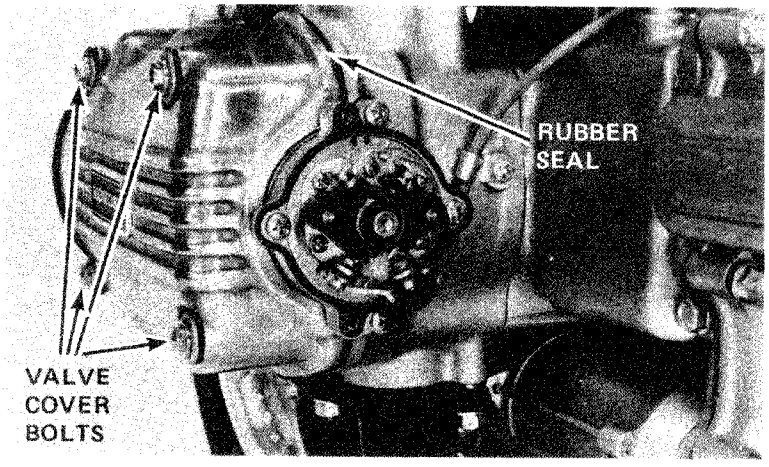

© 1976 American Honda Motor Co., Inc.
Printed in U.S.A. 7-78

6 ENGINE LOWER END REPAIR

6

SERVICE INFORMATION 6-2
KICK STARTER MECHANISM INSPECTION 6-5
ENGINE CASE REMOVAL 6-7
PISTON AND ROD REMOVAL 6-8
PISTON INSPECTION 6-11
CYLINDER INSPECTION 6-12
CRANKSHAFT REMOVAL AND INSPECTION 6-14
BEARING INSPECTION 6-16
BEARING SELECTION 6-18
ENGINE ASSEMBLY 6-20

© 1978 American Honda Motor Co., Inc.
Printed in U.S.A. 7-78

SERVICE INFORMATION

Specifications

Cylinders

I.D.: 72.000 to 72.015 mm (2.834 - 2.835 in)
Service limit: 72.1 mm (2.838 in)
Out-of-round:
Service limit: 0.15 mm (0.006 in)
Taper:
Service limit: 0.05 mm (0.002 in)
I.D. variation between cylinders:
Service limit: 0.10 mm (0.004 in)
Warp across top of cylinders:
Service limit: 0.10 mm (0.004 in)

Pistons and Piston Pins

Ring groove width (top and second): 1.5 - 1.52 mm (.0591 - .0599 in)
Service limit: 1.6 mm (0.063 in)
Ring groove width (oil ring): 2.805 - 2.82 mm (.1104 - .1110 in)
Service limit: 2.9 mm (0.114 in)
Ring-to-groove clearance (top and second): 0.02 to 0.045 mm (.008 - .0018 in)
Service limit: 0.15 mm (0.006 in)
Piston pin diameter: 17.000 ± .003 mm
Piston pin bore: 17.010 to 17.016 mm
Piston O.D. at skirt: 71.945 to 71.97 mm (2.8325 to 2.8335 in)
Service limit: 71.85 mm (2.8288 in)
Piston to cylinder clearance: 0.03 to 0.07 mm (.0012 - .0027 in)
Service limit: 0.15 mm (.006 in)

Piston Rings

Ring end gap (top and second): 0.25 to 0.40 mm (0.010 - 0.016 in)
Service limit: 0.70 mm (0.027 in)
Ring end gap (third - oil ring): 0.2 to 0.9 mm (0.008 - 0.035 in)
Service limit: 1.1 mm (0.043 in)

Crankshaft

Rod and main bearing clearance: 0.02 to 0.04 mm (0.008 - 0.0016 in)
Service limit: 0.08 mm (0.0032 in)
Rod bearing side clearance: 0.15 to 0.30 mm (0.006 - 0.012 in)
Crank pin taper:
Service limit: 0.004 mm (0.0002 in)
Crank pin out-of-round:
Service limit: 0.008 mm (0.0003 in)
Crankshaft Bend (Run-Out):
Service limit: 0.05 mm (0.0019 in)

GL-1000 SHOP MANUAL
© 1976 American Honda Motor Co., Inc.
Printed in U.S.A. 7-78

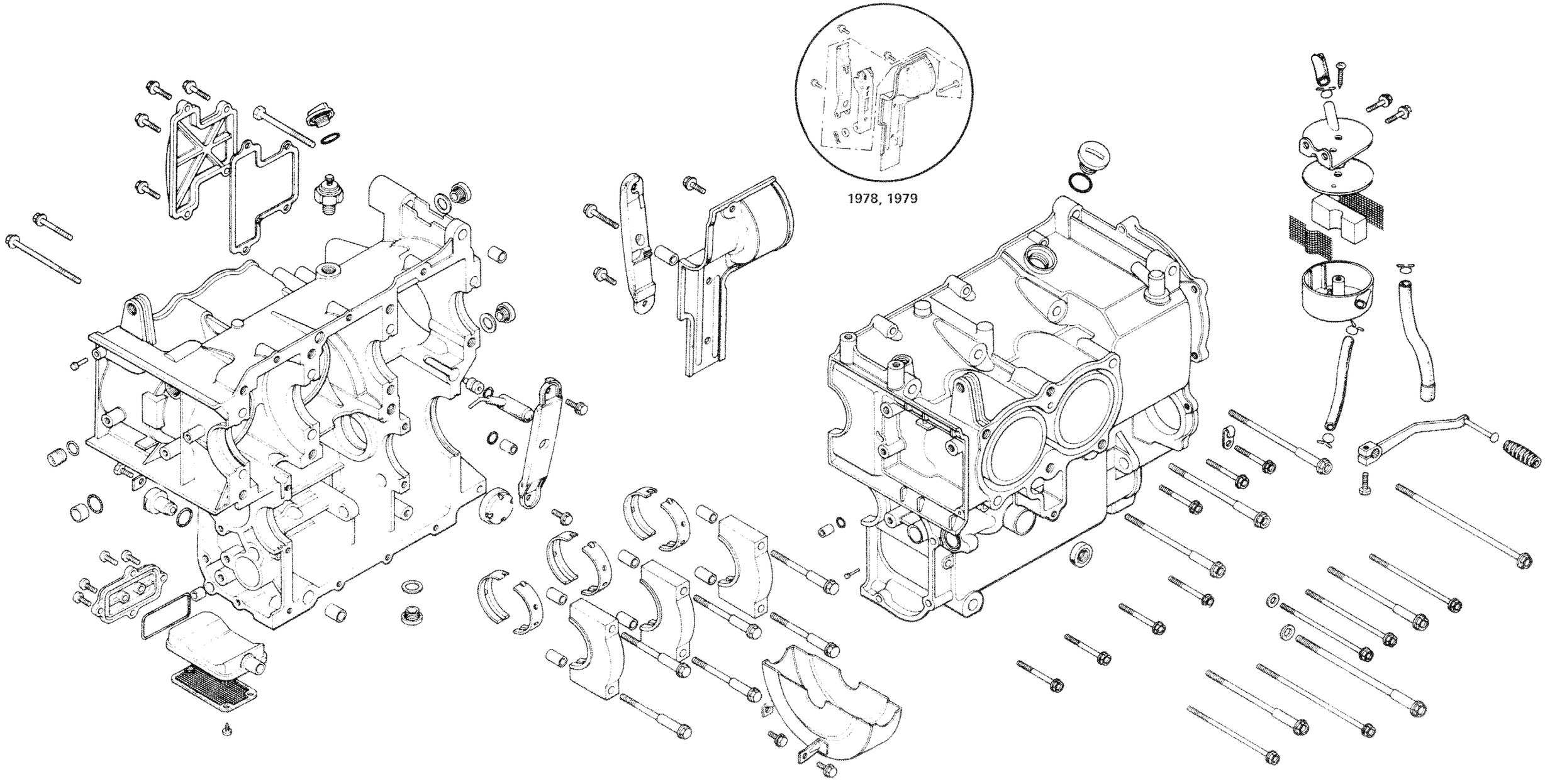
1978, 1979

Torque Values

Cases:

10 mm bolts: 330-370 kg-cm (24-27 ft-lb)
8 mm bolts: 250-290 kg-cm (216-252 in-lb)
6 mm bolts: 100-140 kg-cm (87-122 in-lb)

Connecting rod bolts: 250-290 kg-cm (24-27 ft.lb)

Main bearings: 380-420 kg-cm (27.5-30.4 ft-lb)

Working Practice

All bearing inserts are a selective fit and are identified by color code. Select replacement bearing from color code table. After installing new bearings, they should be rechecked with plastigauge to verify fit. When fitting new rod inserts use those with drilled oil holes on left side only to insure proper cylinder wall lubrication.

Tools and Materials

Piston Supports (set of two) HC 41329
Piston Ring Compressors, Adjustable Ratchet (2 1/8 - 5 in)
Piston Pin Tool Set HC 57307
Case Supports HC 41334
Drive Shaft Bearing Remover HC 48429
Driver Attachment HC 41328
Bearing Drive 'A' HC 41316
Bearing Drive 'B' HC 41317
17 mm Bearing Remover Set HC 41313
Torque Damper Compressor HC 41331
Torque Wrench 0-300 in-lb
Torque Wrench 0-150 ft-lb
Feeler Gauge Set HC 06241
Vee Blocks (two pc) HC 41291 (5-inch)
Cylinder Gauge Set 35-80 mm HC 11884
Micrometer 0-25 mm HC 11885
Micrometer 25-50 mm HC 11886
Micrometer 50-75 mm
Standard Mechanics' Wrenches
Three Bond Case Sealer
Lubriplate Assembly Grease
Plastigauge 0.025-0.076 mm (0.0010-0.0033 in)

© 1978 American Honda Motor Co., Inc.
Printed in U.S.A. 7-78

ENGINE LOWER END REPAIR
KICK STARTER INSPECTION

Engine Removal

To perform engine lower end repairs, drain the engine oil and coolant, remove the engine, and place it in an engine adaptor/stand.

For engine removal procedures, refer to Section 4.

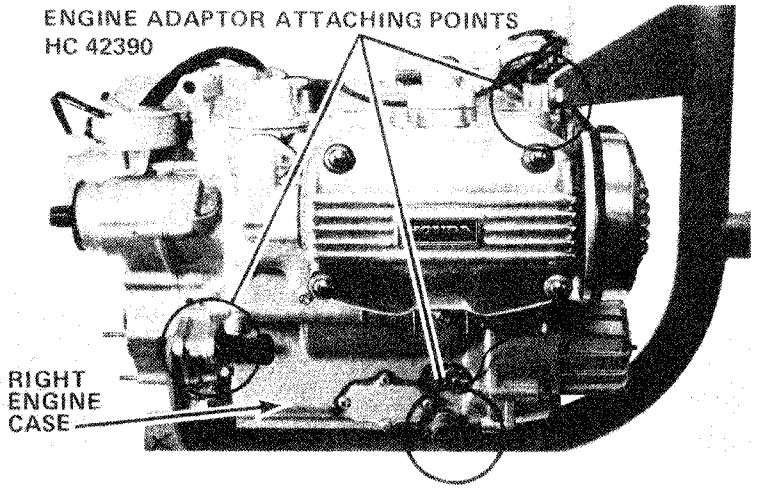

KICK STARTER MECHANISM INSPECTION

Engine Cover Removal

Remove clutch cover and rear engine cover.

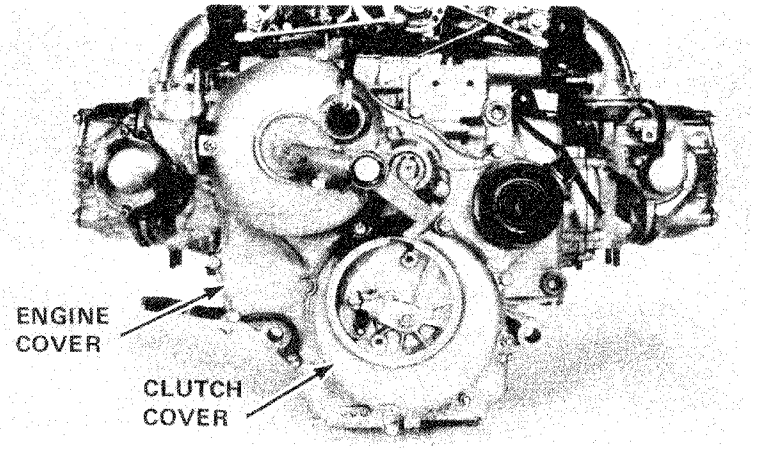

Check the kick starter ratchet and pinion teeth for wear.

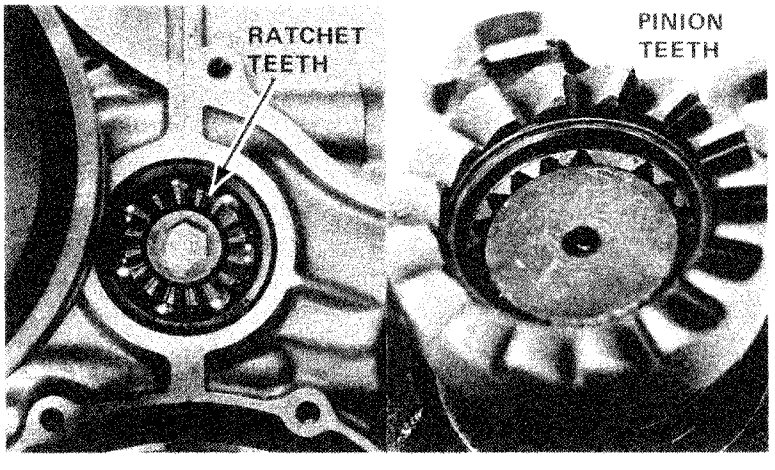

© 1978 American Honda Motor Co., Inc.
Printed in U.S.A. 7-78

Straighten the lock tab. Remove the guide bolt, ratchet flange and guide plate.

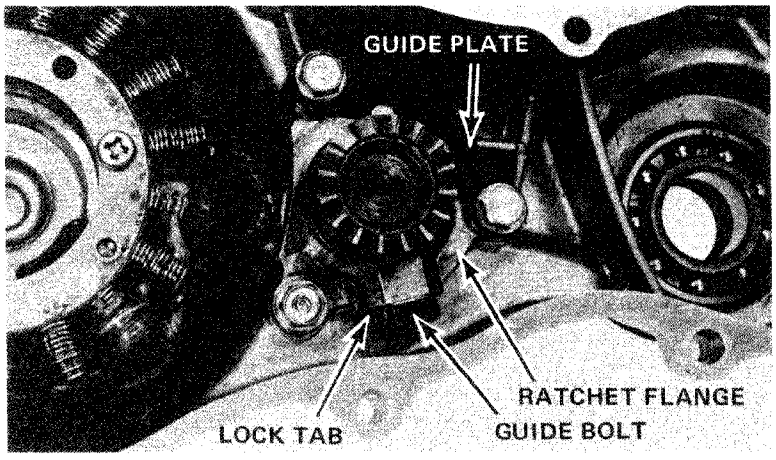

Remove the starter shaft and the kick starter spring. Inspect the shaft splines and collar for wear.

Inspect the starter pinion cam groove for nicks or burrs. Lubricate the splines and pinion with NLGI #2 grease.

Reassemble the parts, using a new lock tab under the guide bolt.

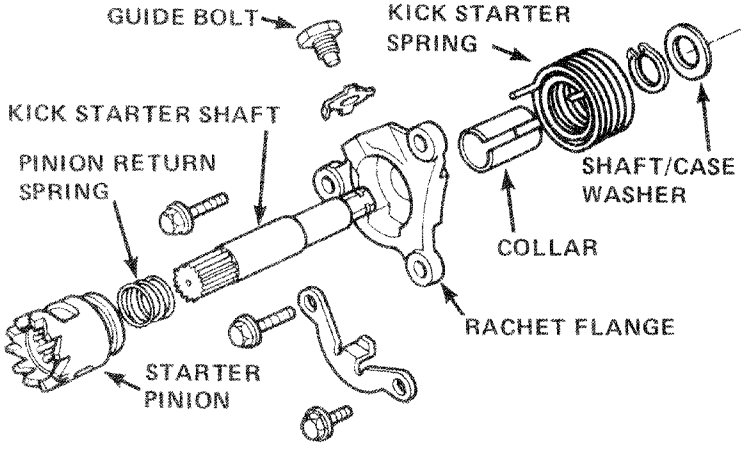

Install the kick starter arm and circlip on the kick starter shaft.

Lubricate the starter arm kick joint slot and shaft, and install the dust seals, kick joint, and circlip.

NOTE

Replace the circlips if they are worn or loose.

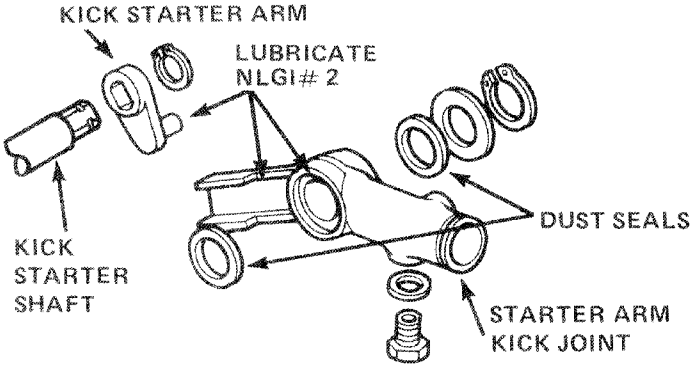

© 1976 American Honda Motor Co., Inc.
Printed in U.S.A. 7-76

ENGINE CASE REMOVAL

Remove the engine rear cover and clutch cover.

Remove the scavenge pump bolt and sprocket.

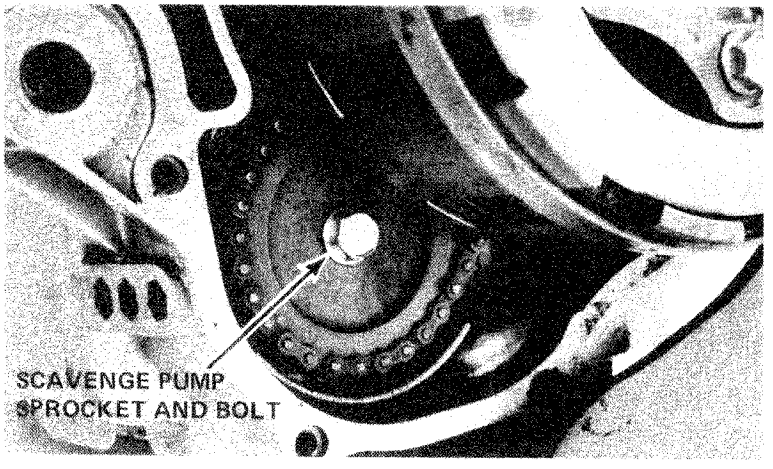

Remove the front engine cover.

NOTE

Observe the location of case O-rings, collars and knock pins.

Remove the left cylinder head and starter. See Section 5.

NOTE

It is not necessary to remove the right cylinder head unless the right-hand pistons are to be removed also.

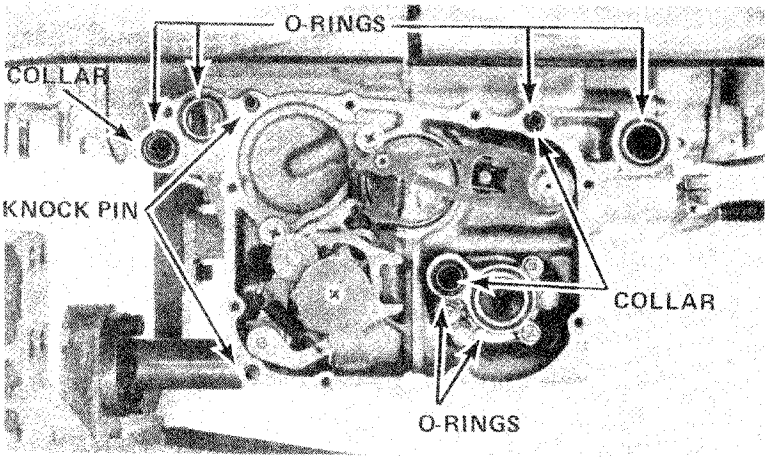

Remove the 19 left case bolts.

NOTE

There are engine case bolts behind the starter and in the head oil return chamber on the left side only.

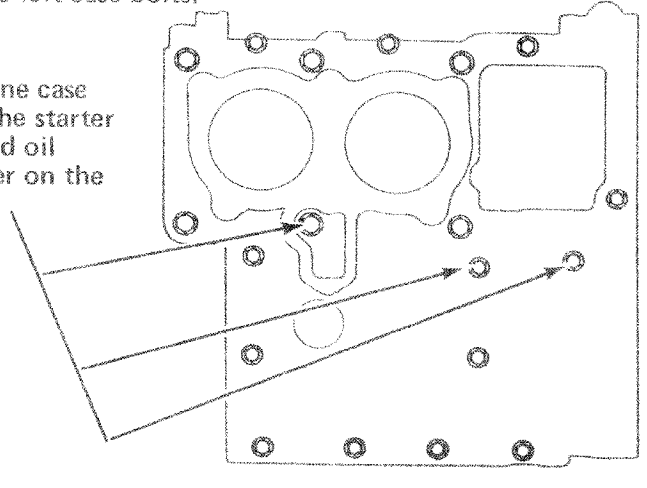

Remove the three right case bolts.

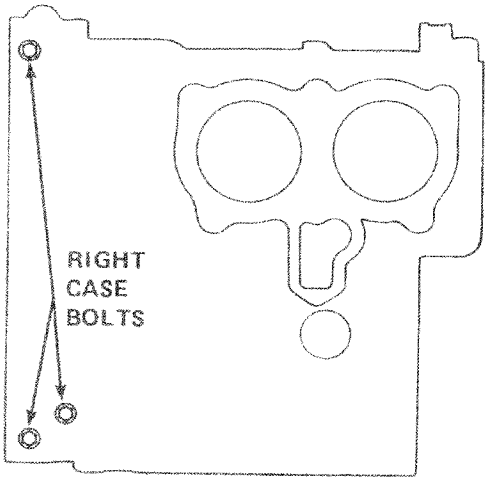

© 1976 American Honda Motor Co., Inc.
Printed in U.S.A. 7-78

Rotate the stand placing the left case up.

Remove the shift arm from the gear shift drum.

Slide the case partially up and install the case supports.

CAUTION

To prevent damage, place shop towels under the pistons to prevent them from falling onto the transmission when the left case is removed.

Remove the left case.

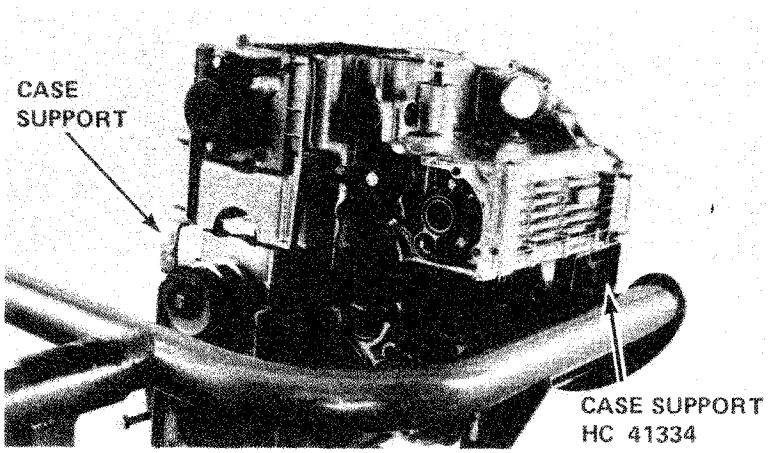

PISTON AND ROD REMOVAL

Check connecting rod side clearance.

If clearance exceeds the service limit replace the rod. Inspect the crankshaft for rough spots or damage.

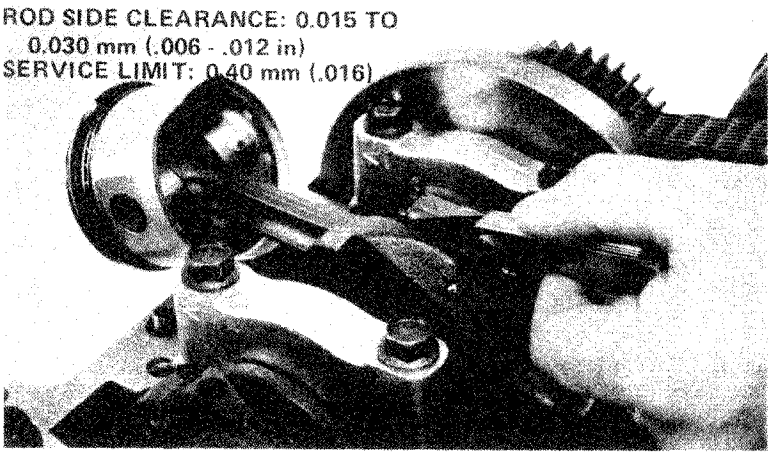

Remove the left side rods and pistons, and mark them to indicate the cylinder position.

NOTE

The left-hand rod inserts are drilled and align with the rod oil hole to provide lubrication to the cylinder walls.

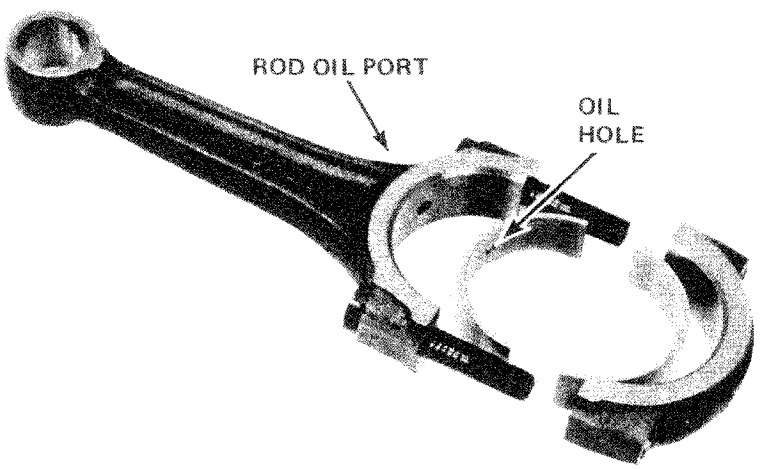

© 1976 American Honda Motor Co., Inc.
Printed in U.S.A. 7-78

ENGINE LOWER END REPAIR
PISTON AND ROD REMOVAL

To remove the right-hand pistons remove the right-hand cylinder head. See Section 5.

CAUTION

On high mileage engines, inspect the cylinders for a ridge just above the highest point of ring travel. Any ridge must be removed with an automotive type ridge reamer before removing right-hand pistons, to allow the pistons and rings to pass through the cylinder.

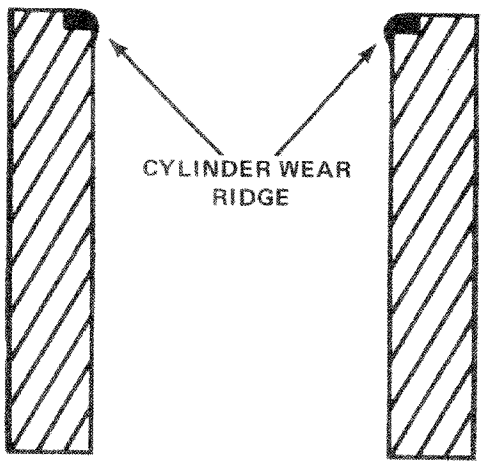

Remove the right hand rods and pistons, and mark them to indicate cylinder position.

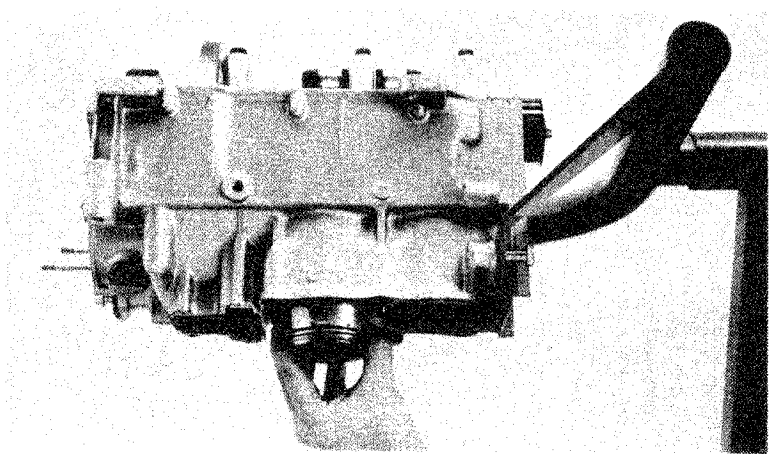

NOTE

The right-hand rod inserts are not drilled. Normal splash provides adequate lubrication to the right cylinder walls.

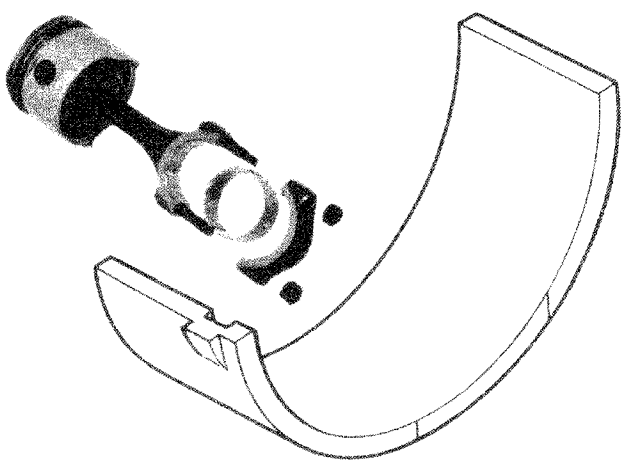

© 1976 American Honda Motor Co., Inc.
Printed in U.S.A. 7-78

Piston Pin Removal and Inspection

Press pins free with a hydraulic press and pin removal tool.

Place the piston and rod assembly on the pin removal tool. Align the driver pilot and pilot collar on the piston pin. Press the pin free of the piston.

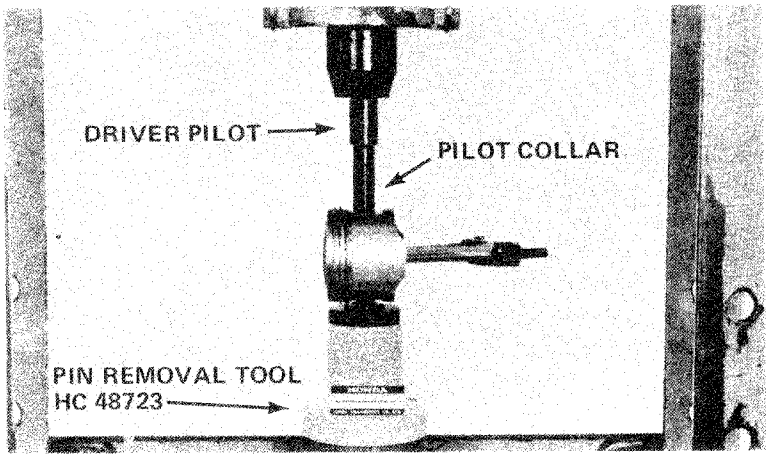

Measure the piston and piston pin to determine pin clearance.

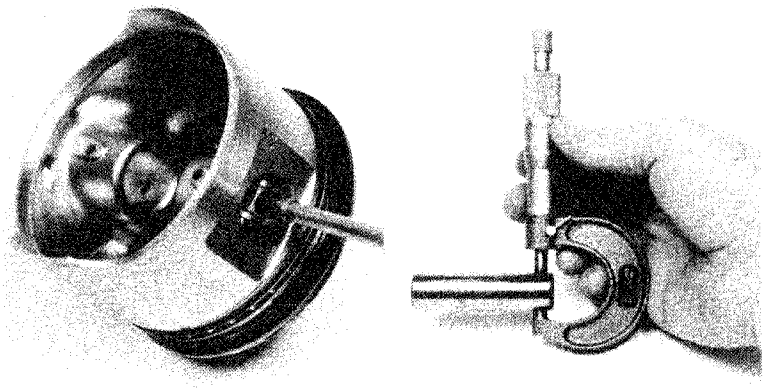

SERVICE LIMIT: 0.050 mm (0.0008 in)

Piston Pin Installation

NOTE
Piston pin is a 0.016 mm (0.0006 in) press fit in the connecting rod small end. Before fitting pins, lubricate all friction surfaces with hypoid gear oil.

To install the pin, insert the pilot collar inside the piston and connecting rod. Place the piston and rod assembly on the pin removal tool. Align the driver pilot and piston pin into the piston pin bore and press the pin into place.

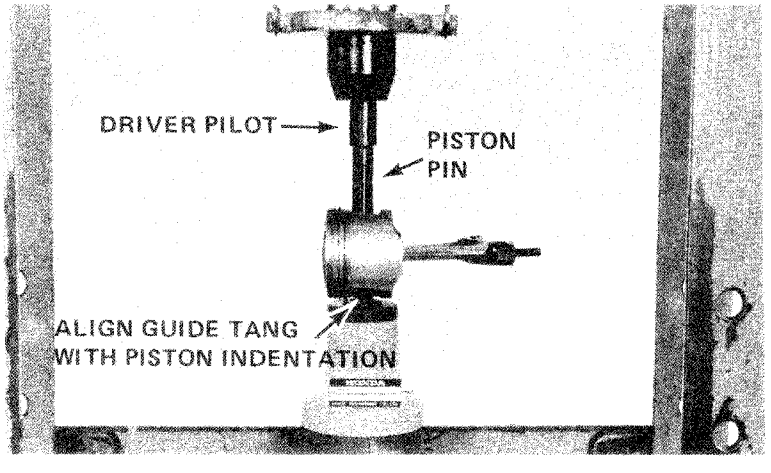

© 1978 American Honda Motor Co., Inc.
Printed in U.S.A. 7-78

PISTON INSPECTION

Remove rings and discard.

NOTE

Piston rings should only be reused in cases of extremely low mileage engines.

Inspect the piston ring-to-groove clearance, using a new piston ring.

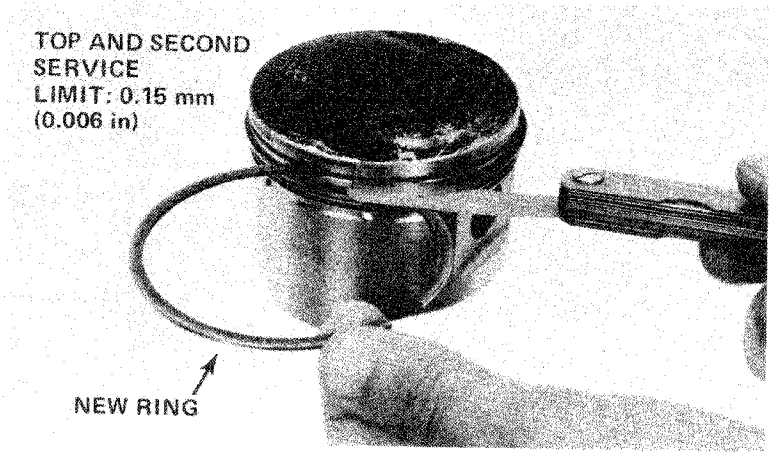

Clean and inspect the piston dome. Inspect for evidence of pitting or deterioration. Inspect the ring lands for abnormal wear and piston thrust faces for scratches.

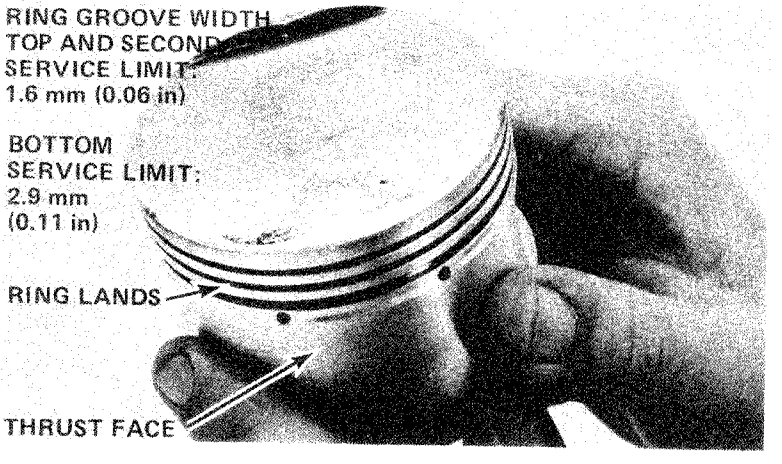

Measure each piston diameter at the skirt. If the pistons show wear beyond limits, replacement is necessary.

NOTE

Check cylinder dimensions carefully when pistons show excessive wear. Major cylinder service may be required.

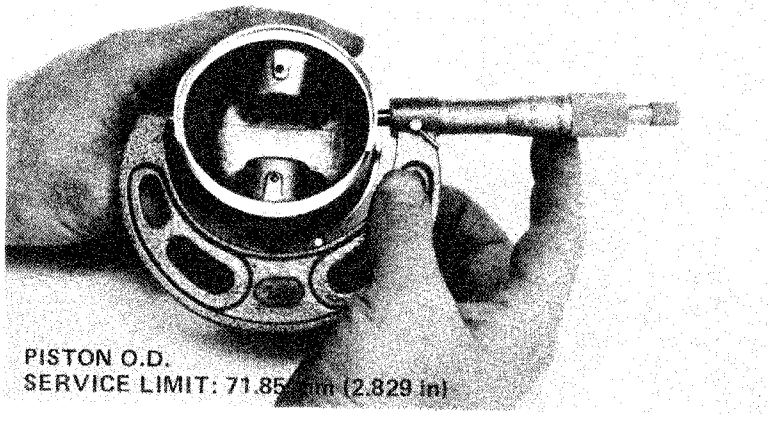

© 1978 American Honda Motor Co., Inc.
Printed in U.S.A. 7-78

CYLINDER INSPECTION

Inspect the cylinder bores for wear and out-of-round. Check for taper both at right angles and parallel to the engine centerline.

If the cylinders do not require major service, deglaze them.

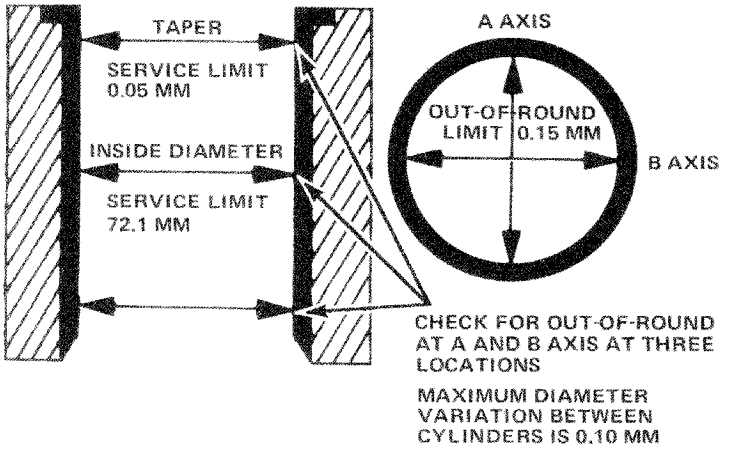

Inspect the tops of cylinders for warpage. Check in an X pattern.

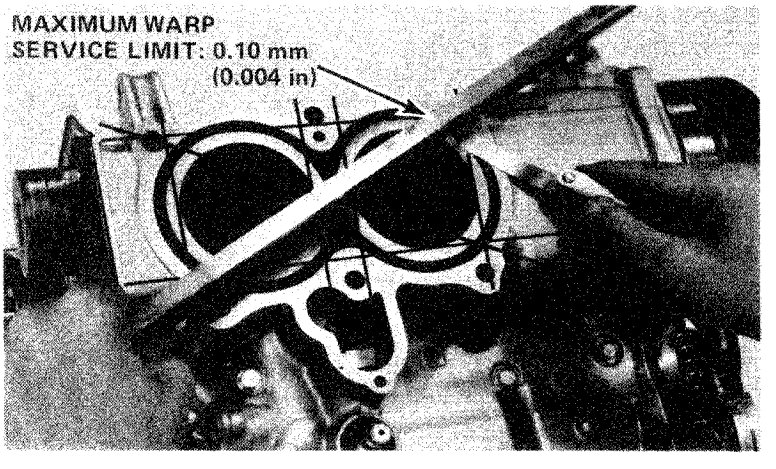

Set each piston ring into the cylinder and inspect the end gap.

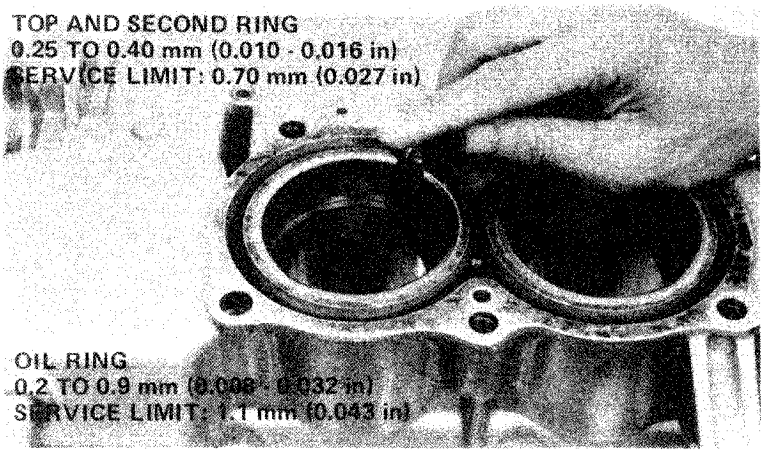

© 1976 American Honda Motor Co., Inc.
Printed in U.S.A. 7-78

ENGINE LOWER END REPAIR
CYLINDER INSPECTION

Piston Ring Installation

Carefully install the piston rings.

NOTE

All rings should be installed with the markings facing the cylinder head. After installation on the pistons they should be free enough in the lands to be rotated.

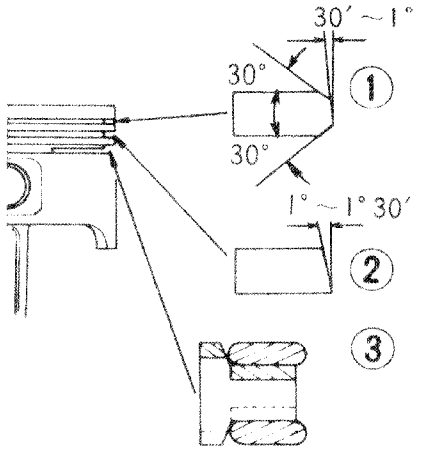

Do not align the gaps in the oil rings.

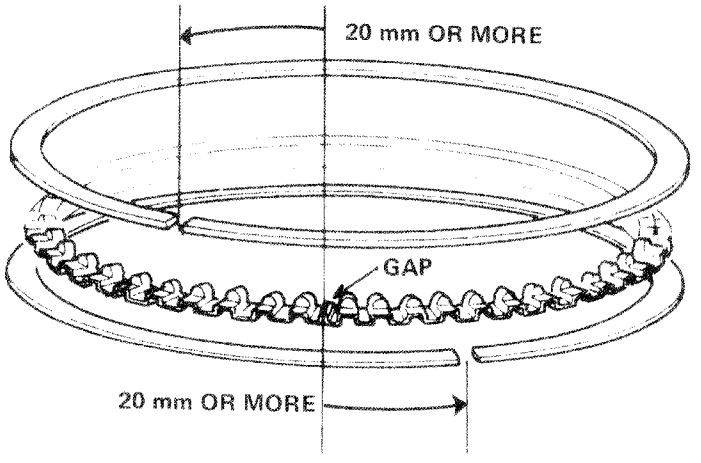

Space the piston ring end gaps 120 degrees apart.

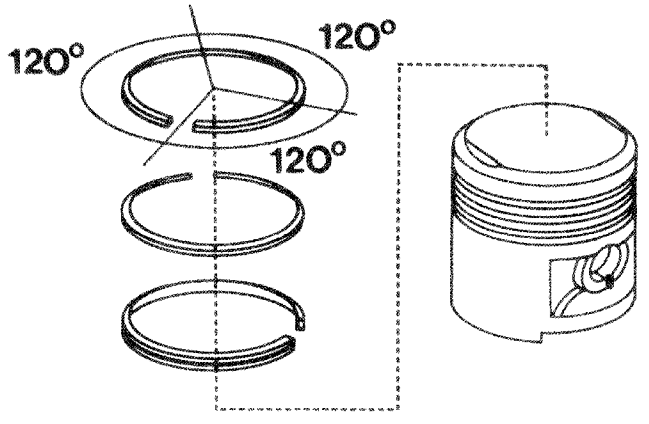

© 1976 American Honda Motor Co., Inc.
Printed in U.S.A. 7-78

CRANKSHAFT REMOVAL AND INSPECTION

NOTE

Before removing the main bearing caps, note the arrow on each cap, showing its position on the bearing. Mark each cap to identify its location on the engine.

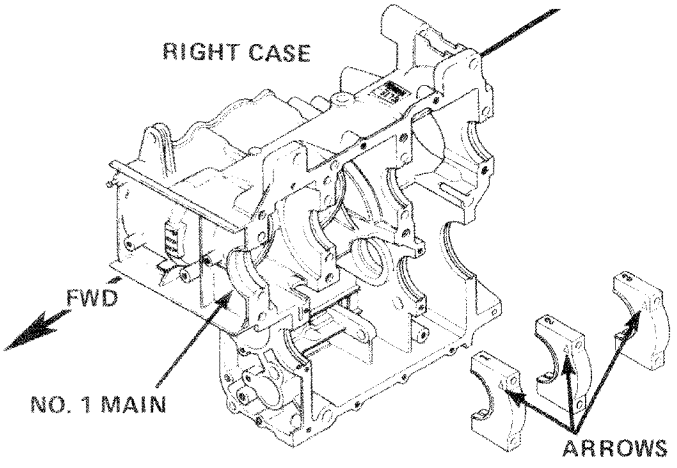

Remove the primary chain spray oiler and the oil separator.

Lift the transmission mainshaft and primary driven gear and remove it through the primary chain.

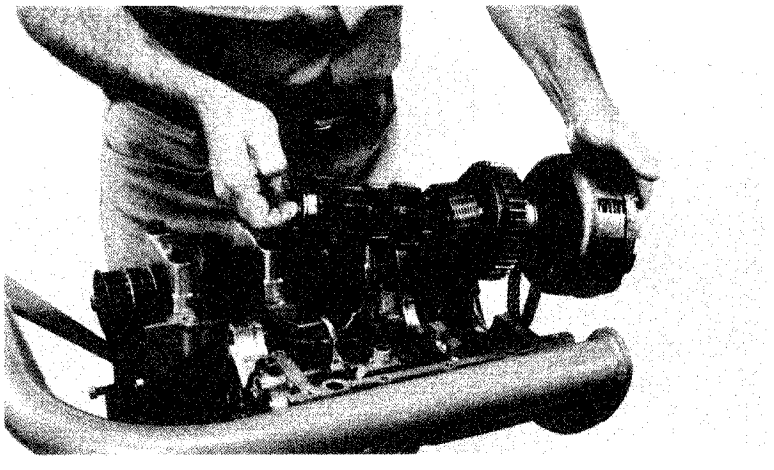

Remove the crankshaft main bearing caps and lift the crankshaft from the case.

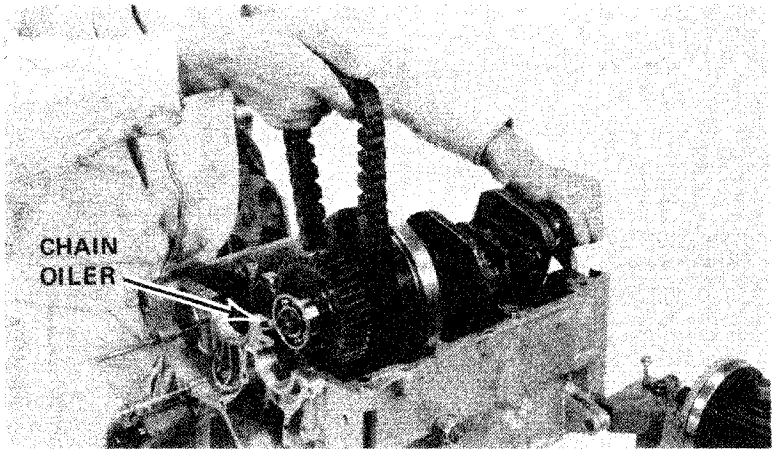

© 1976 American Honda Motor Co., Inc.
Printed in U.S.A. 7-78

ENGINE LOWER END REPAIR
CRANKSHAFT REMOVAL AND INSPECTION

Set the crankshaft on a stand or vee blocks. Set a dial indicator into the center main journal.

Rotate the crankshaft two revolutions and read bend or runout at the center journal.

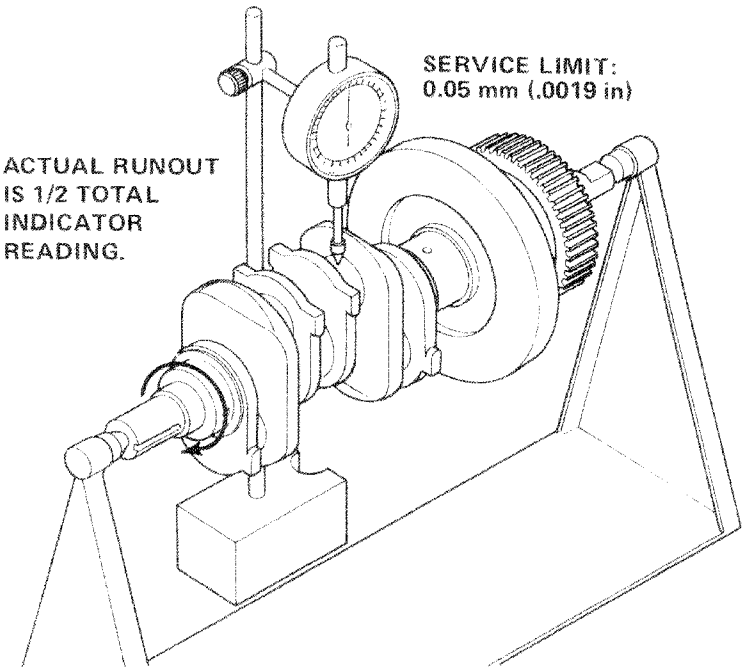

Inspect the crankshaft main journals and crankpins for taper with a micrometer.

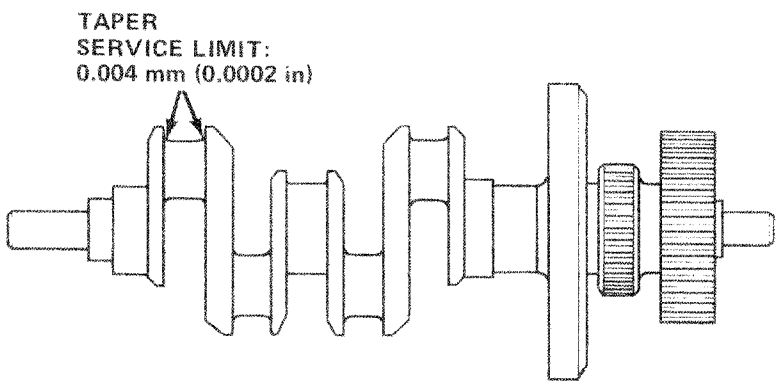

Inspect the crankshaft main journals and crankpins for out-of-round with a micrometer.

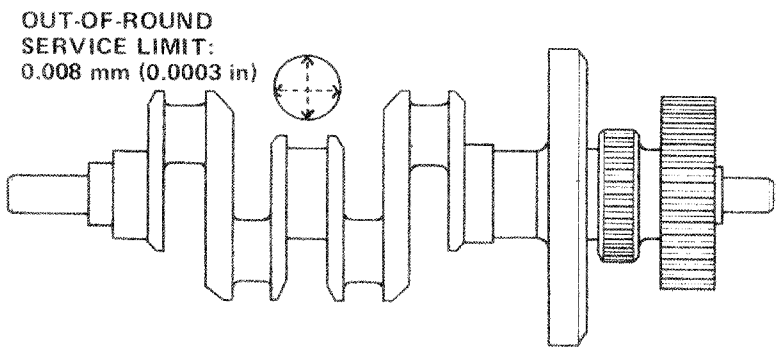

NOTE

The crankshaft cannot be repaired. Replace if the journals or crankpins are burnt, cracked or out of tolerance, or if the runout is beyond limits.

© 1976 American Honda Motor Co., Inc.
Printed in U.S.A. 7-78

BEARING INSPECTION

Put the lower bearing inserts in place and install the crankshaft. Put a piece of plastigauge across each journal, avoiding the oil hole.

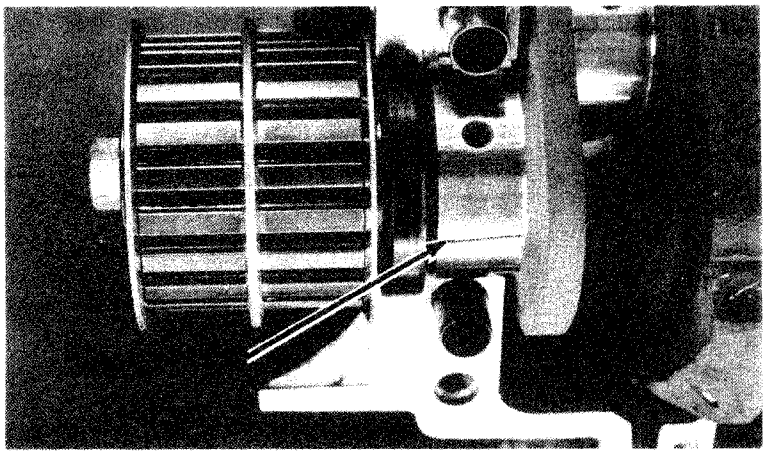

Install the main bearing caps on the correct journals, and torque them evenly.

NOTE

Do not rotate the crankshaft during the inspection.

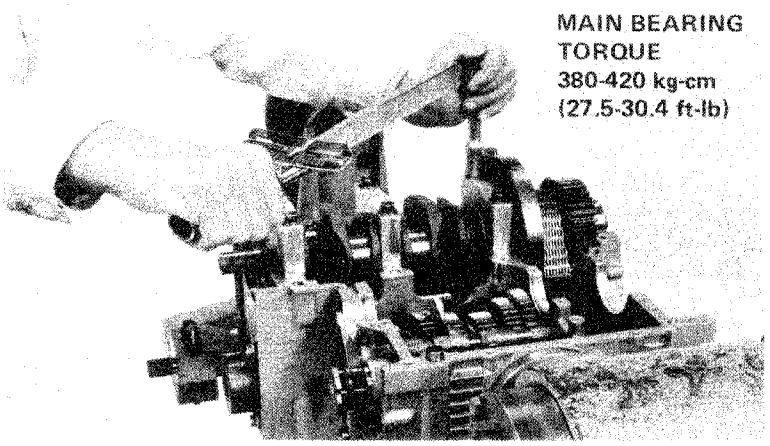

Remove the caps and measure the compressed plastigauge on each journal.

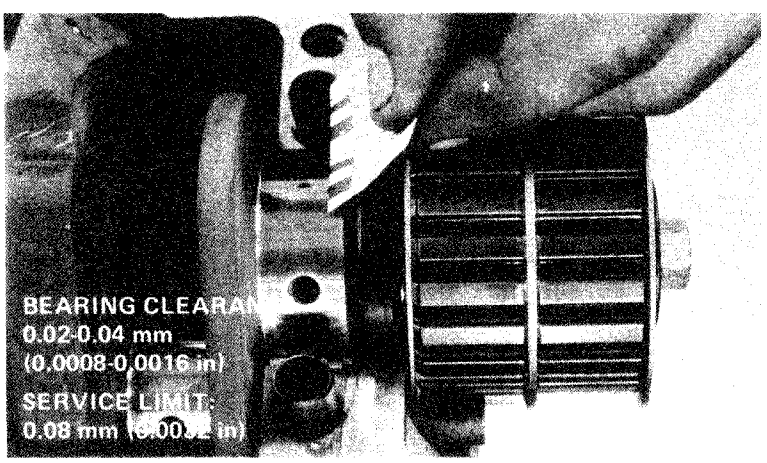

© 1976 American Honda Motor Co., Inc.
Printed in U.S.A. 7-78

ENGINE LOWER END REPAIR
BEARING INSECTION

Assemble the connecting rod inserts in each rod cap.

Place a plastigauge strip across each rod crankpin.

NOTE

Avoid placing plastigauge across the crankshaft oil holes.

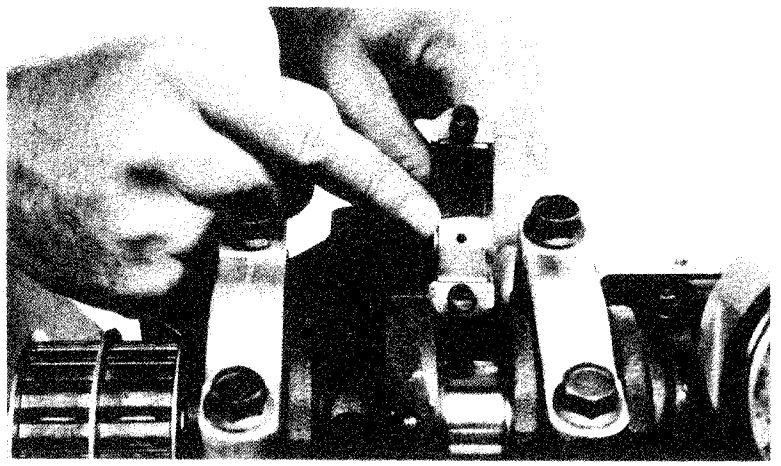

Install each connecting rod on the corresponding crankpin and torque to specifications.

NOTE

Do not rotate the crankshaft during the inspection.

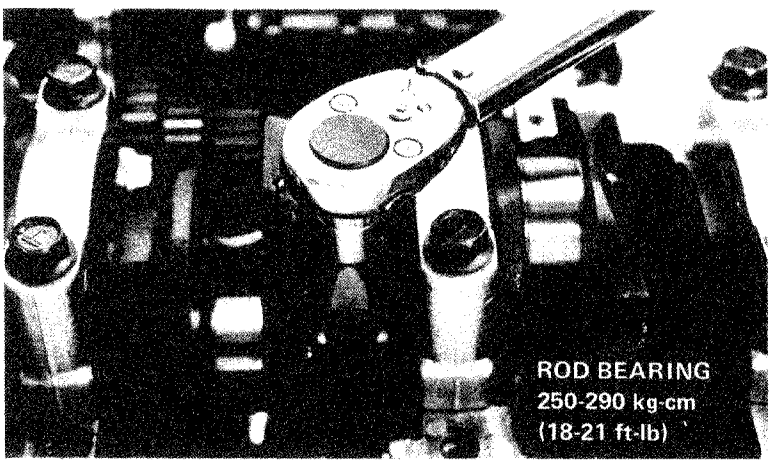

Remove the caps and measure the plastigauge.

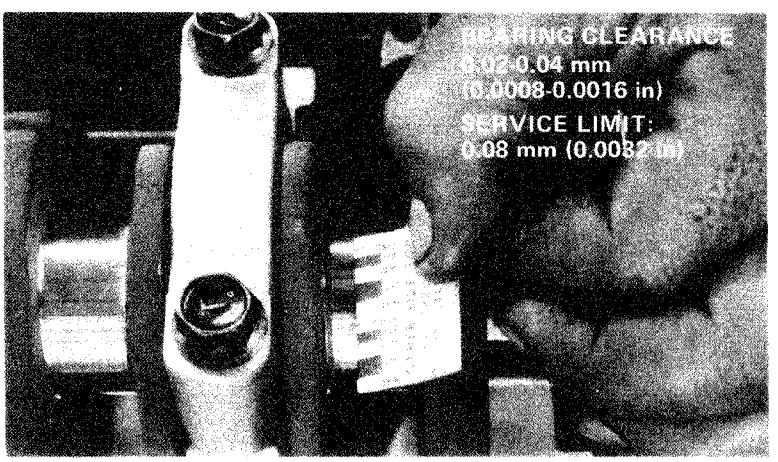

© 1978 American Honda Motor Co., Inc.
Printed in U.S.A. 7-78

BEARING SELECTION

If rod bearing clearance is beyond tolerance, select replacement bearings as follows:

Determine and record each connecting rod I.D. code number.

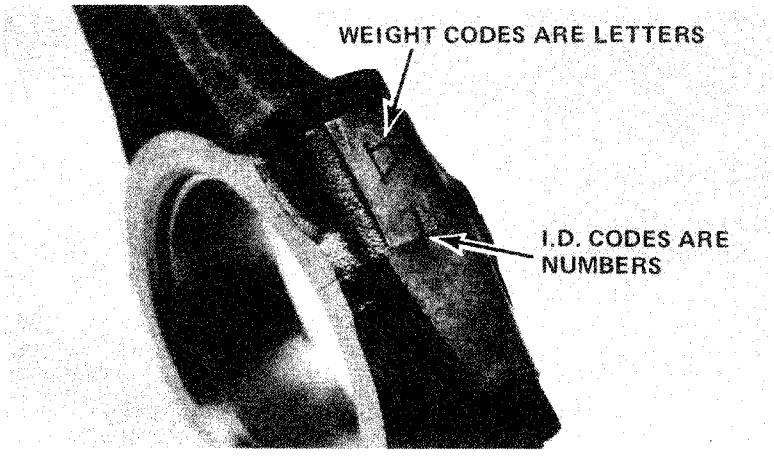

Determine and record the corresponding crankpin O.D. code letters.

CRANKPIN O.D. CODES ARE LETTERS

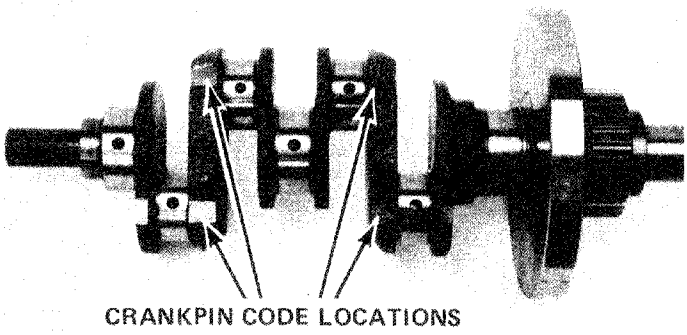

Cross reference the crank and rod codes to determine the replacement bearing color.

ROD BEARING SELECTION

CONNECTING ROD SIZE CODES			
3	BROWN	BLACK	BLUE
2	GREEN	BROWN	BLACK
1	YELLOW	GREEN	BROWN
	A	B	C
	CRANKSHAFT CONNECTING ROD JOURNAL SIZE CODES		

© 1976 American Honda Motor Co., Inc.
Printed in U.S.A. 7-78

ENGINE LOWER END REPAIR
BEARING SELECTION

If main bearing clearance is beyond tolerance, select replacement bearings as follows:

Determine and record the engine crankcase bearing support codes from the pad on the right-hand engine case.

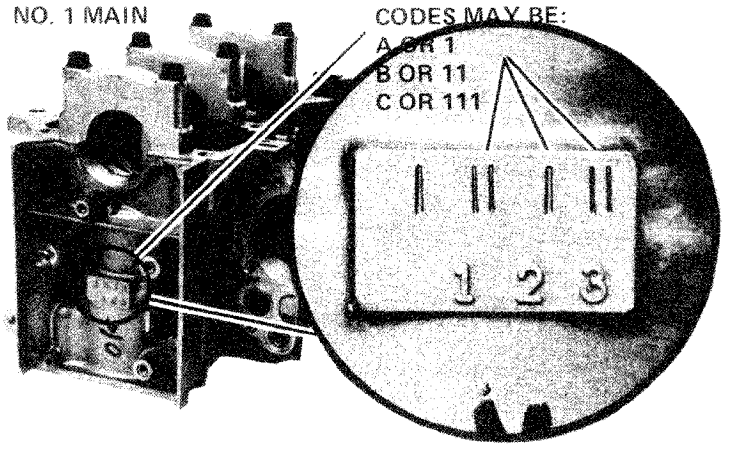

Determine and record the corresponding main journal O.D. code number.

MAIN JOURNAL O.D. CODES ARE NUMBERS

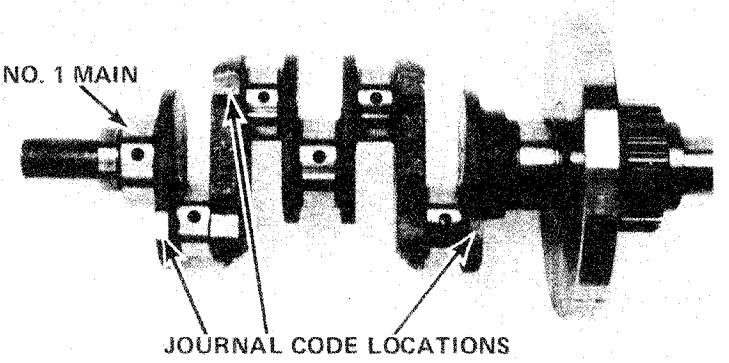

Cross reference the bearing support and crank codes to determine the replacement bearing color.

MAIN BEARING SELECTION

CRANKCASE BEARING SUPPORT SIZE CODES			
C or 111	BROWN	BLACK	BLUE
B or 11	GREEN	BROWN	BLACK
A or 1	YELLOW	GREEN	BROWN
	1	2	3
	CRANKSHAFT MAIN JOURNAL SIZE CODES		

© 1976 American Honda Motor Co., Inc.
Printed in U.S.A. 7-78

ENGINE ASSEMBLY

NOTE

If new bearings are being installed, check bearing clearance with Plastigauge prior to final assembly.

Final Assembly

Assemble the lower main bearing inserts into the bearing supports. Lay the crankshaft and primary chain carefully in place.

Install the upper bearing inserts, dowel pins, and bearing caps.

CAUTION

Be sure bearing caps are installed in their correct location and the cap arrows point to the engine top side.

NOTE

Lubricate bolt threads and underside of bolt heads with molybdenum disulfide grease.

Torque the main cap bolts.

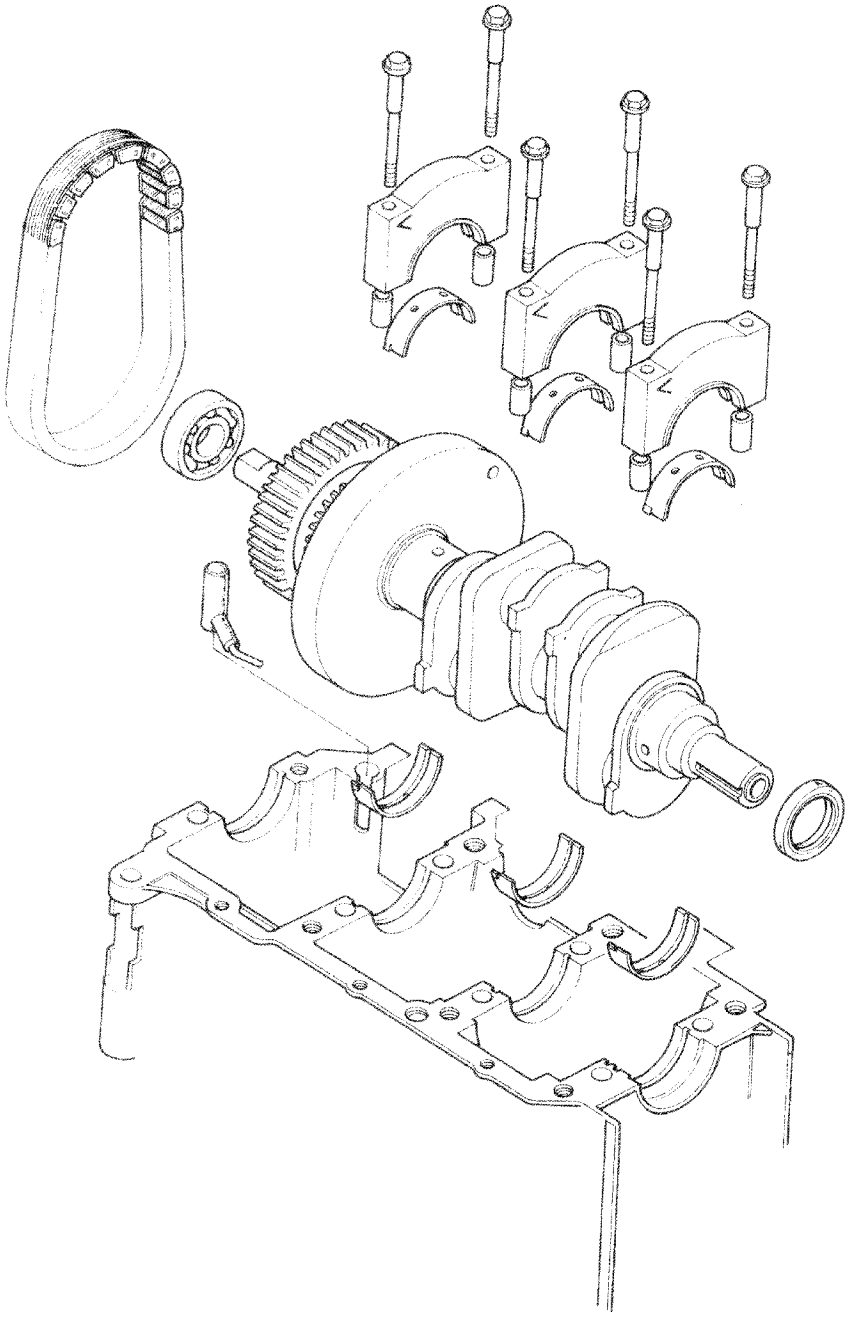

© 1976 American Honda Motor Co., Inc.
Printed in U.S.A. 7-78

ENGINE LOWER END REPAIR
ENGINE ASSEMBLY

Install the transmission main shaft and primary driven gear through the primary chain.

Install the oil separator and chain oiler.

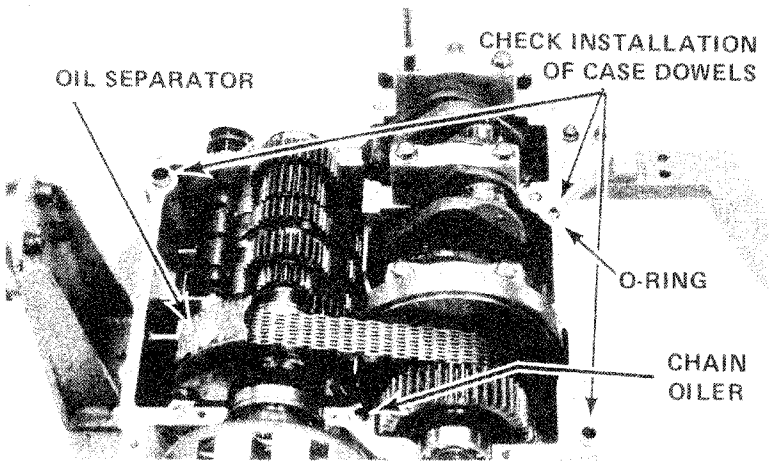

Be sure the set rings fit in the right-hand case and the mainshaft bearing outer races.

Align the mainshaft oil passage locator tab with the cylinder block groove.

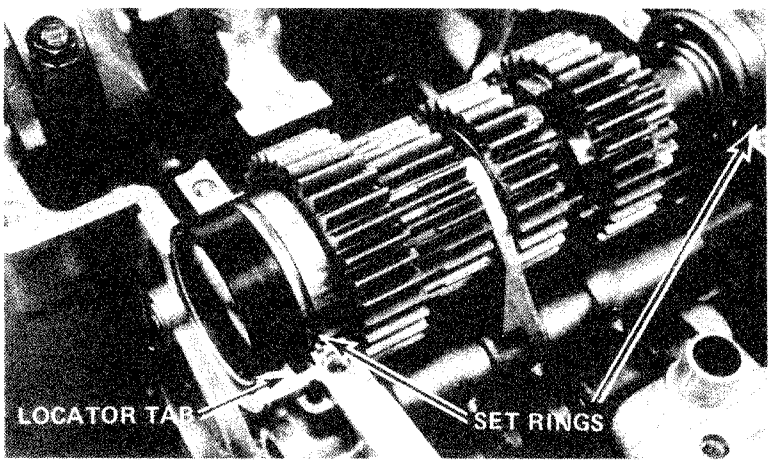

Install the right-hand rod assemblies into the cylinders 1 and 3 with the rod oil holes facing the engine top.

NOTE

Rod bearing inserts for cylinders 1 and 3 do not have oil holes.

Torque rod caps: 250-290 kg-cm (18-21 ft-lb)

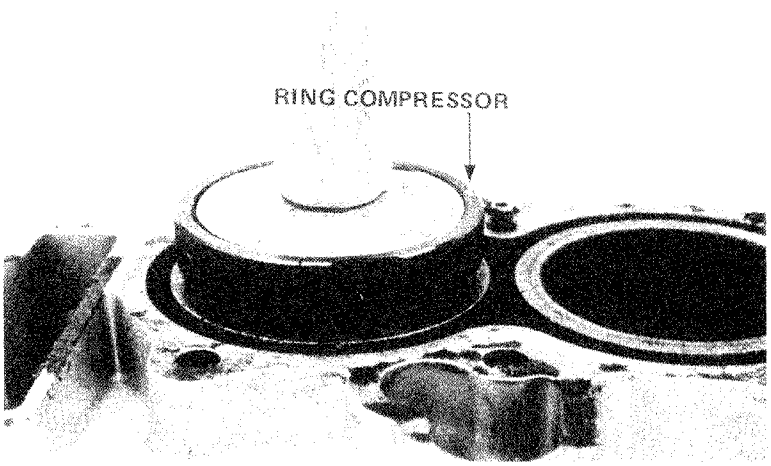

© 1976 American Honda Motor Co., Inc.
Printed in U.S.A. 7-78

Install the left-hand rod assemblies for cylinders 2 and 4 with the rod oil holes facing the engine top.

NOTE

Rod bearing inserts for cylinders 2 and 4 have oil holes.

Torque: 250-290 kg-cm (18-21 ft-lb)

Align the pistons to TDC and install the piston bases.

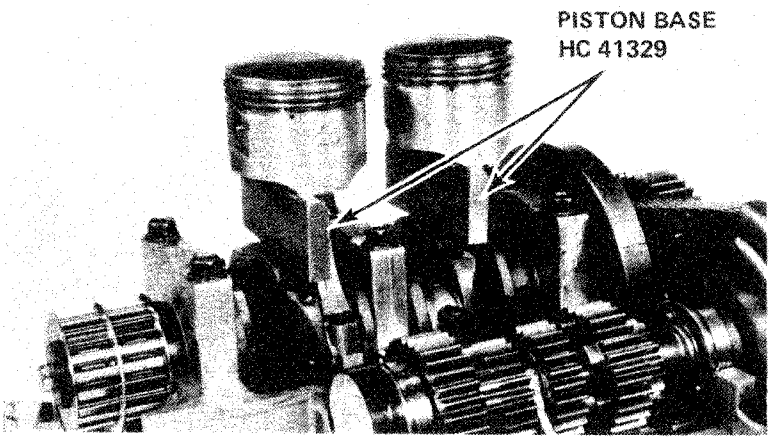

Apply sealant to the case joining surface.

Lubricate the cylinder walls with engine oil and lower the left case into position while engaging the shift arm into the drum.

NOTE

The left cylinders have a large chamfer that allows the rings to enter the cylinders without using a ring compressor.

Remove the piston bases and seat the case.

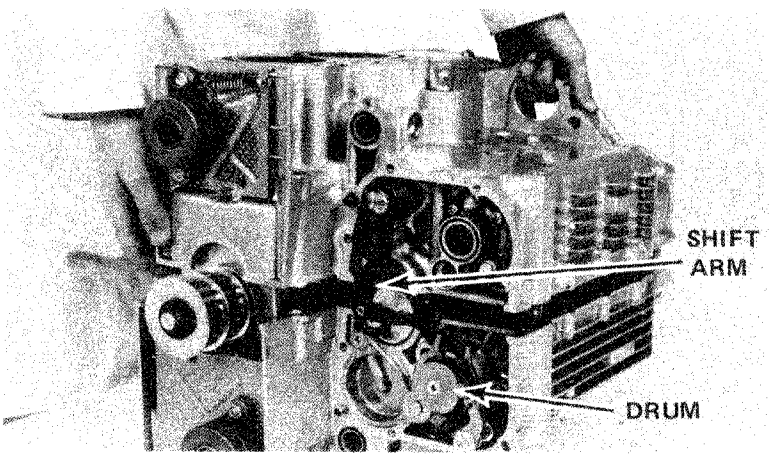

Coat all case bolt threads and the underside of the heads with molybdenum disulfide grease and torque them as shown.

NOTE

The X pattern torque sequence for the 10 mm case bolts.

10 mm: 330-370 kg-cm (24-27 ft-lb)
8 mm: 250-290 kg-cm (216-252 in-lb)
6 mm: 100-140 kg-cm (87-122 in-lb)

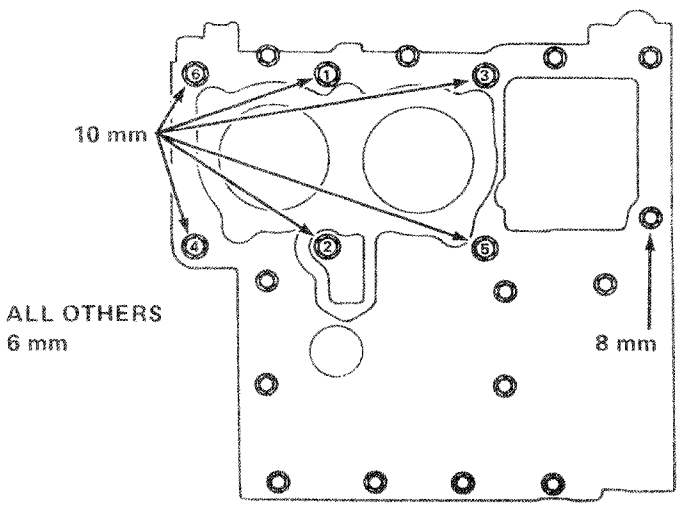

© 1976 American Honda Motor Co., Inc.
Printed in U.S.A. 7-78

ENGINE LOWER END REPAIR SCREW AND BOLT SIZES

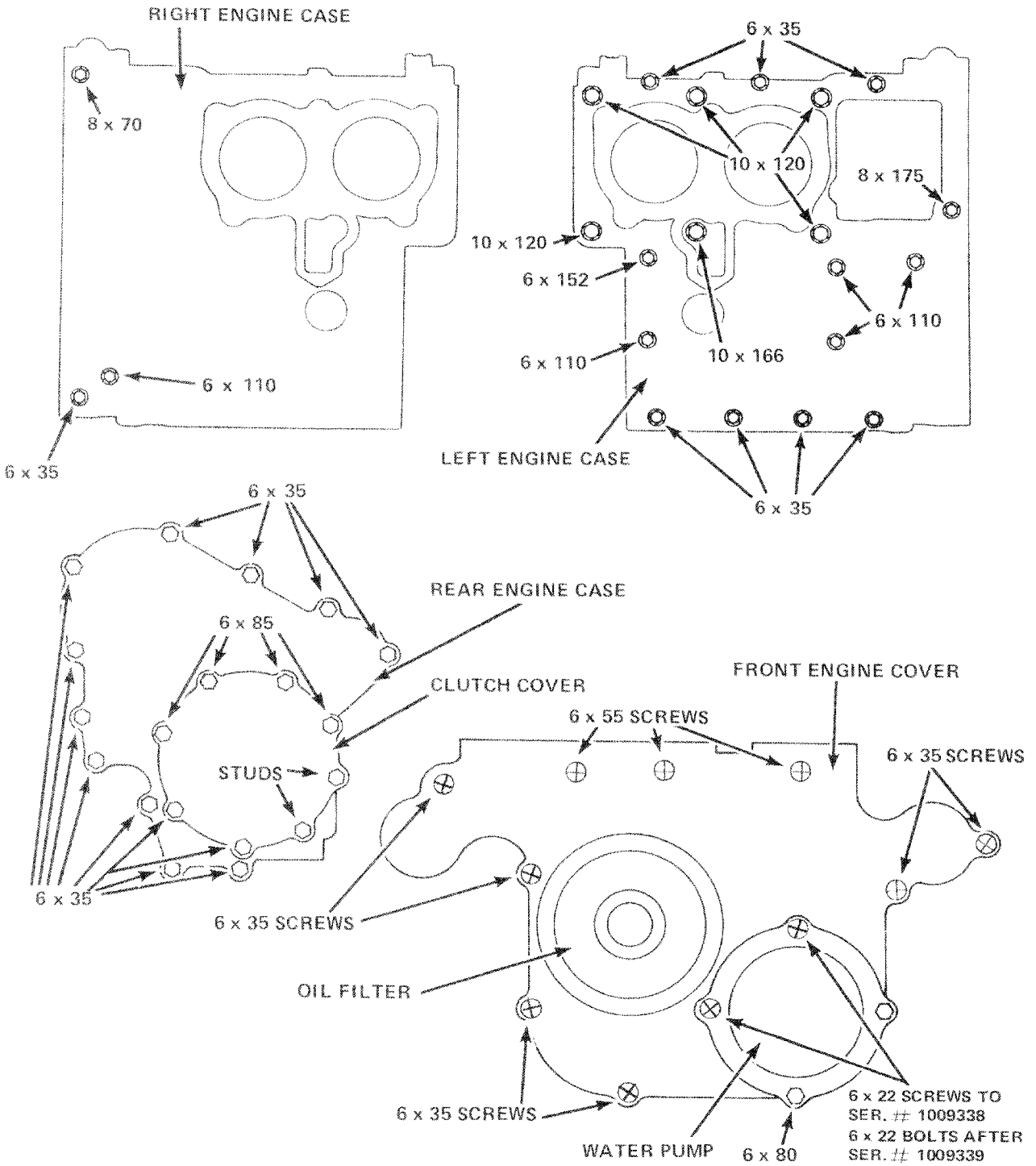

© 1976 American Honda Motor Co., Inc.
Printed in U.S.A. 7-78

7 LUBRICATION SYSTEM

SERVICE INFORMATION 7-2
TROUBLESHOOTING 7-5
ENGINE OIL LEVEL 7-6
ENGINE OIL & FILTER CHANGE 7-7
OIL PRESSURE CHECK 7-8
OIL PUMP REMOVAL 7-8
OIL PUMP INSPECTION 7-9
OIL CONTAMINATION 7-12

© 1978 American Honda Motor Co., Inc.
Printed in U.S.A. 7-78

SERVICE INFORMATION

Specifications

System type: Wet sump, pressure feed. Scavenge pump in clutch housing.

Oil capacity:
3.5 liters (3.7 qt) at engine assembly
3.0 liters (3.2 qt) at oil change

Oil type:
Hondaline oil or equivalent

A high-detergent, premium quality motor oil certified to meet or exceed US automobile manufacturers' requirements for service classification SE. Motor oils intended for service SE will show this designation on the container.

The regular use of special oil additives is unnecessary and will only increase operating expenses.

Non-detergent, vegetable, or castor based racing oils are not recommended.

Oil viscosity:
General, all temperatures: SAE 10W40 or 20W50

Alternatives:

Above 15°C (59°F): SAE 30
0° to 15°C (32° to 59°F): SAE 20 or 20W
Below 0°C (32°F): SAE 10W

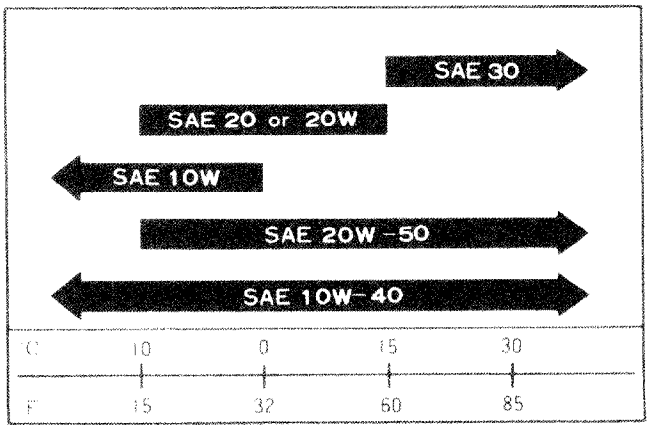

Oil Filter:
Replaceable paper element

Oil Pump pressure:
At cranking speed:
1.27 kg-cm^2 (18 psi) cold
0.35 kg-cm^2 (5 psi) hot

At 950 rpm idle speed:
4.22 kg-cm^2 (60 psi) cold
0.84 kg-cm^2 (12 psi) hot

At 5000 rpm:
4.50 kg-cm^2 (64 psi) cold
4.22 kg-cm^2 (60 psi) hot

©1978 American Honda Motor Co., Inc.
Printed in U.S.A. 7-78

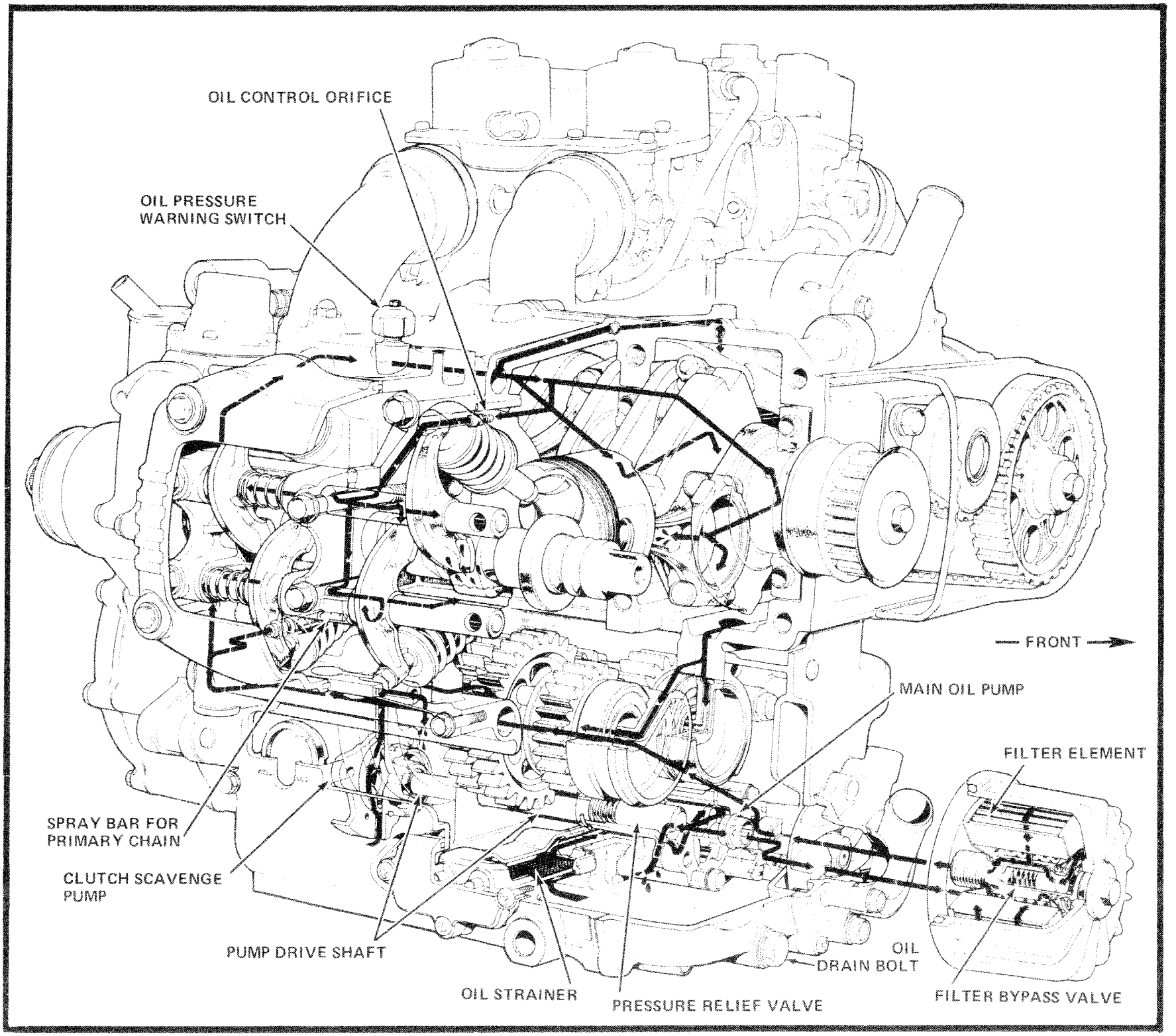

© 1976 American Honda Motor Co., Inc.
Printed in U.S.A. 7-78

Pump tip clearance: 0.15 mm (0.006 in)
  Service limit: 0.35 mm (0.014 in)
Pump side clearance:
  Main oil pump: 0.02 to 0.07 mm (0.001 to 0.003 in)
  Scavenge pump: 0.02 to 0.10 mm (0.001 to 0.004 in)
    Service limit, both pumps: 0.12 mm (0.005 in)
Pump body clearance: 0.15 to 0.21 mm (0.006 to 0.008 in)
  Service limit: 0.41 mm (0.016 in)
Oil pressure warning light:
  On below 0.2 kg/sq cm (3 psi)
  Out at 0.2 to 0.4 kg/sq cm (3 to 6 psi)

Torque Values
Casting core plugs in cylinder heads: 5 to 6 kg-m (36-43 ft-lb)
Oil drain bolt: 350-400 kg-cm (25-29 ft-lb)
Oil filter center bolt: 270 to 330 kg-cm (235-287 in-lb)
Oil pressure warning switch: 150 to 200 kg-cm (131-174 in-lb)
6mm Case bolts: 100 to 140 kg-cm (87-122 in-lb)
8mm Case bolts: 180 to 220 kg-cm (157-191 in-lb)

Working Practice
The pumps at the front and rear of the engine are driven by a chain from the clutch and coupled by a shaft running the length of the engine. Since the drive sprocket in the rear engine cover is bolted to the pump shaft, the pump shaft and main oil pump cannot be removed together without removing the engine and cover. The main oil pump can, however, be disassembled with the engine in the frame.

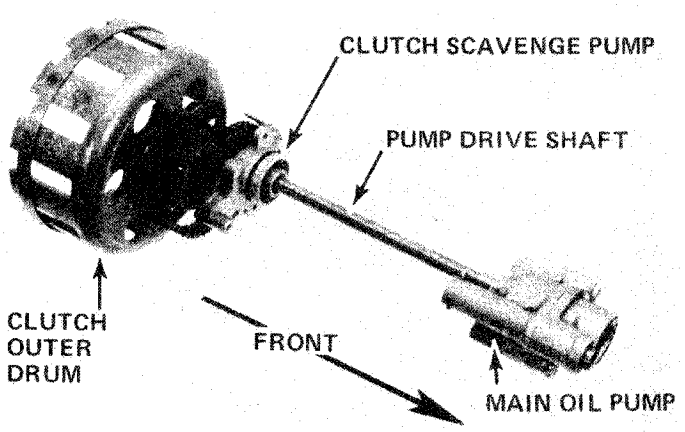

NOTE
Use new gaskets and O-rings when installing or replacing engine oil system parts.

Tools and Materials
Feeler gauges
Straight edge
Thread sealer
Wire brush
Oil pressure gauge
Gum and Sludge remover

NOTE
We suggest the use of a gum and sludge remover made by Ralph Shrader Associates. This material is packaged under their own label of Auto-Care, as well as being packaged for the following manufacturers:

	MANUFACTURER'S PART NUMBER
General Motors	1050003
Chrysler Corp.	3419133
American Motors	899822

© 1976 American Honda Motor Co., Inc.
Printed in U.S.A. 7-78

TROUBLESHOOTING

Oil Level Too Low:
1. Normal consumption of oil
2. External oil leaks
3. Worn piston rings

Oil Contamination:
1. Coolant leaking into oil
2. Oil not changed often enough
3. Defective head gasket

Low Oil Pressure:
1. Defective warning light switch
2. Pressure relief valve stuck open
3. Plugged oil pick-up screen
4. Main oil pump worn

High Oil Pressure:
1. Pressure relief valve stuck closed
2. Plugged oil filter, gallery, or metering orifice
3. Incorrect oil being used

No Oil Pressure:
1. Oil level too low
2. Drive pin sheared or missing from main oil pump
3. Oil pump drive chain broken
4. Oil pump drive shaft broken

Oil in Coolant:
1. Defective head gasket

© 1976 American Honda Motor Co., Inc.
Printed in U.S.A. 7-78

ENGINE OIL LEVEL

Check engine oil level after running the engine a few minutes.

CAUTION

Be sure the oil pressure warning light goes off when the engine is running. If the warning light remains on, stop the engine immediately. Operating the engine with insufficient oil, or insufficient oil pressure, can cause serious engine damage.

1. Park the motorcycle on its center stand, on level ground, with the engine stopped.
2. Observe the oil level at the oil inspection window. The oil level should be between the upper and lower level marks. If the oil level cannot be clearly seen, turn the wiper to clean the window.
3. If the oil level is low, remove the filler cap, and add oil to bring the level to the upper mark.

RECOMMENDED OIL:

USE HONDA 4-STROKE OIL or an equivalent API service classification SE Viscosity: General, all temperatures SAE 10W-40 or 20W-50 Alternate
Above 15°C/59°F: SAE 30
0°C/32°F - 15°C/59°F: SAE 20 or SAE 20W
Below 0°C/32°F: SAE 10W

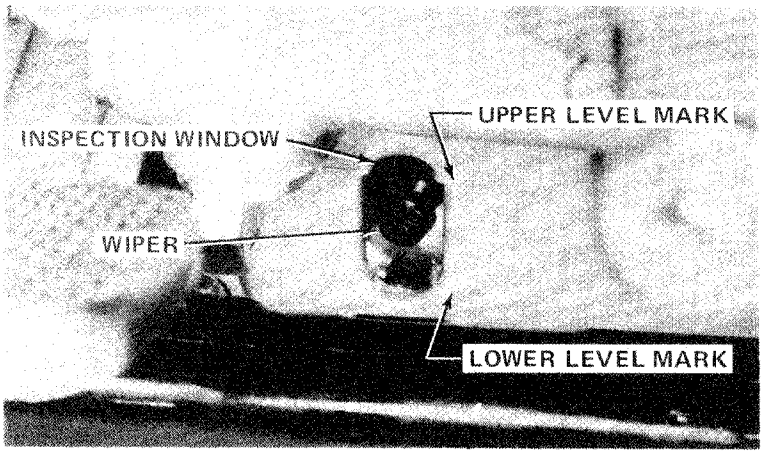

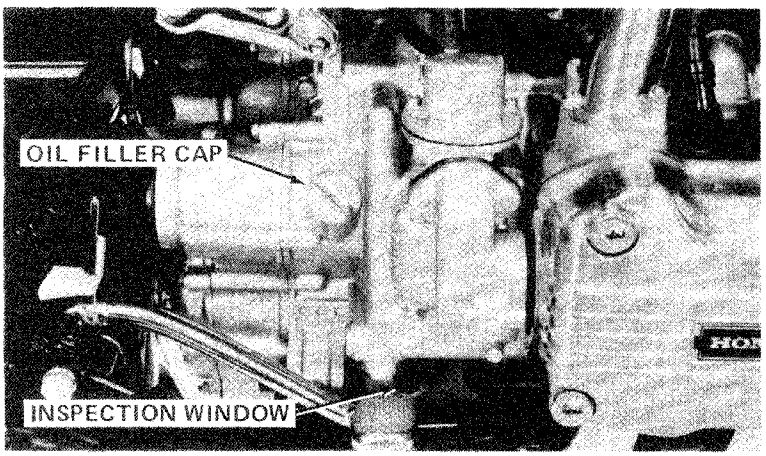

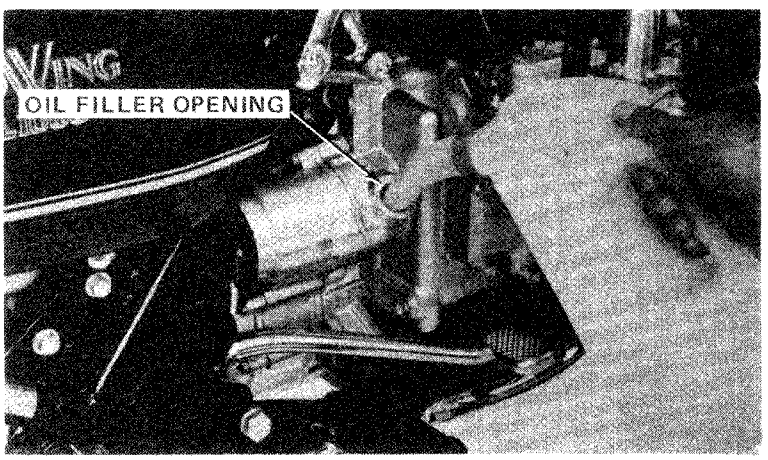

© 1978 American Honda Motor Co., Inc.
Printed in U.S.A. 7-78

ENGINE OIL CHANGE

An engine oil change should be performed with the engine at normal operating temperature, and the motorcycle parked on its center stand.

1. Place an oil drain pan beneath the crankcase. Remove the oil filler cap and crankcase drain plug. Allow the oil to drain completely.

   NOTE:
   Remove the oil filter at this time, if it is scheduled to be replaced.
2. Inspect the oil drain plug to be sure its sealing washer is in good condition. Install the drain plug and tighten it to a torque value of 350 - 400 kg-cm (25 - 29 ft-lb).

   NOTE:
   Install the oil filter at this time.
3. Fill the crankcase with approximately 3.0 liters (3.2 U.S. qt) of the recommended grade of oil (see page 7-5A), and reinstall the oil filler cap.
4. Start the engine and allow it to idle for a few minutes. Check to be sure there are no oil leaks.
5. Stop the engine and check the oil level (see OIL LEVEL CHECK, page 7-5A). If the oil level is low, add oil to bring the level to the upper mark.

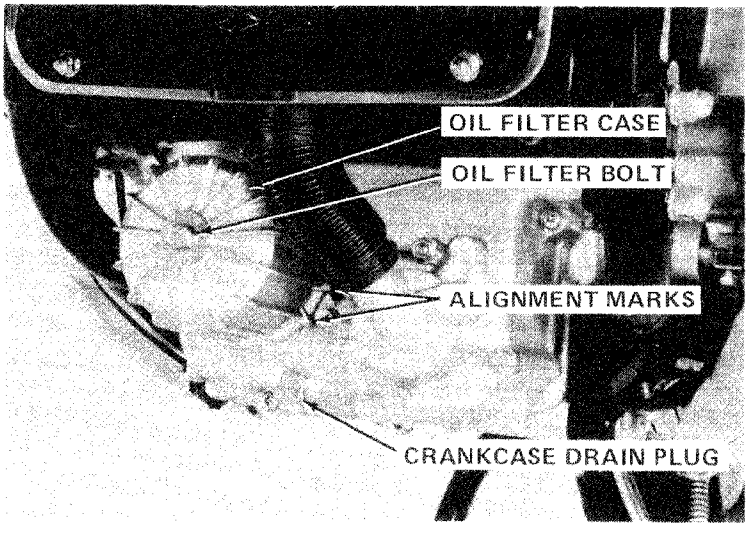

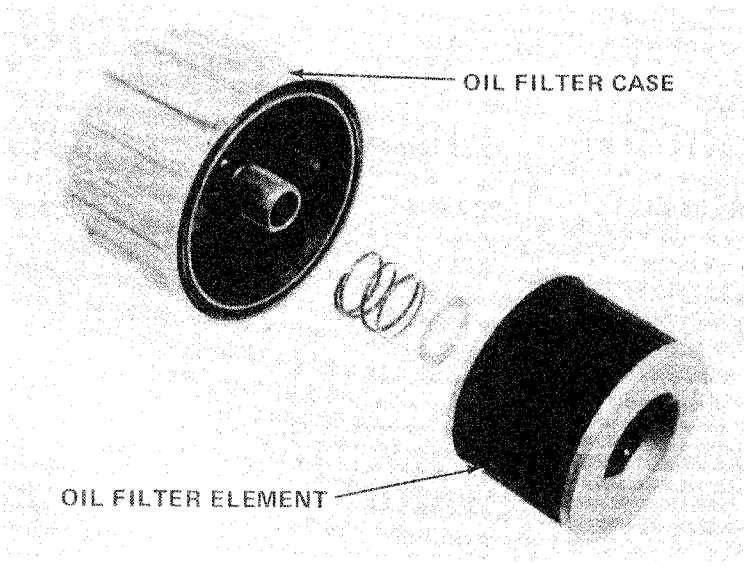

ENGINE OIL FILTER CHANGE

Perform oil filter replacement in conjunction with the engine oil change. Replace the filter after draining, and before refilling, the crankcase.

1. Remove the oil filter bolt and filter case from the engine. Remove and discard the used filter element.
2. Inspect the sealing "O" rings on the filter bolt and filter case, and replace if necessary.
3. Insert the new filter element in the case. Be sure the spring and washer are installed on the filter bolt in the order shown.
4. Position the oil filter case on the engine so alignment marks match. Tighten the oil filter bolt to a torque value of 270 - 330 kg-cm (20 - 24 ft-lb).

© 1978 American Honda Motor Co., Inc.
Printed in U.S.A. 7-78

OIL PRESSURE CHECK

Remove the rear oil gallery plug and install the pressure gauge to check oil pressure.

	COLD PSI	HOT PSI
Cranking	18	5
900 RPM	60	12
5000 RPM	64	60

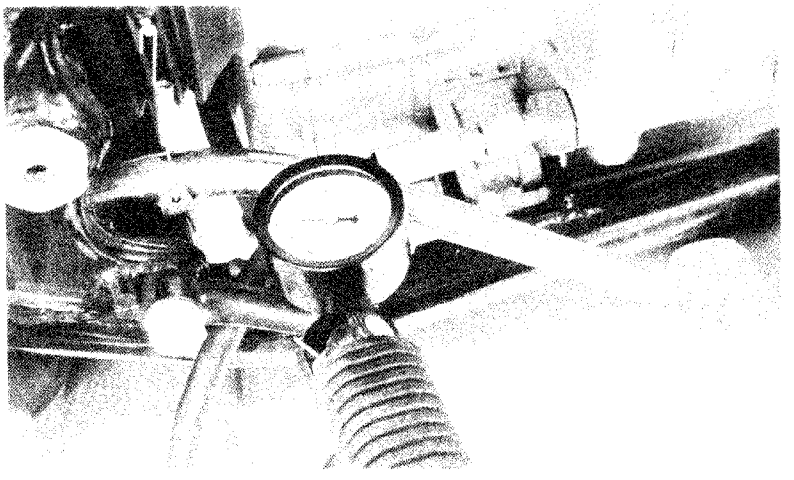

OIL PUMPS

Main Oil Pump Removal

Drain the cooling system.

Remove the radiator as described in Section 8.

Drain the oil system and remove the filter.

Remove the front engine cover. Disassemble the main oil pump.

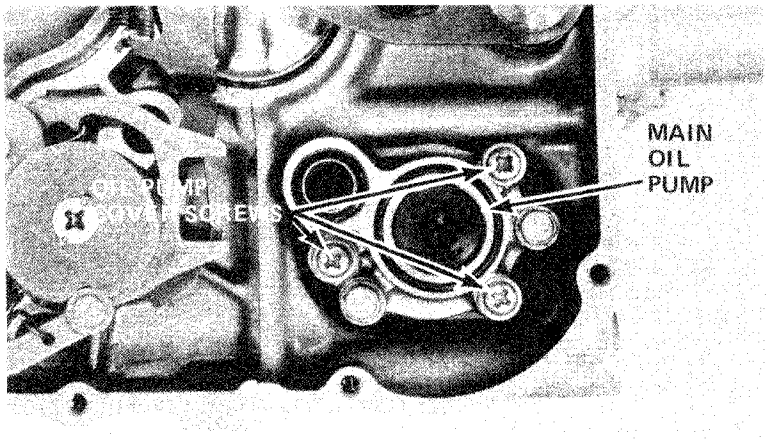

Scavenge Pump Removal

Remove the engine as described in Section 4.

Remove the rear engine cover, clutch assembly, scavenge pump drive chain and sprocket as described in Section 10.

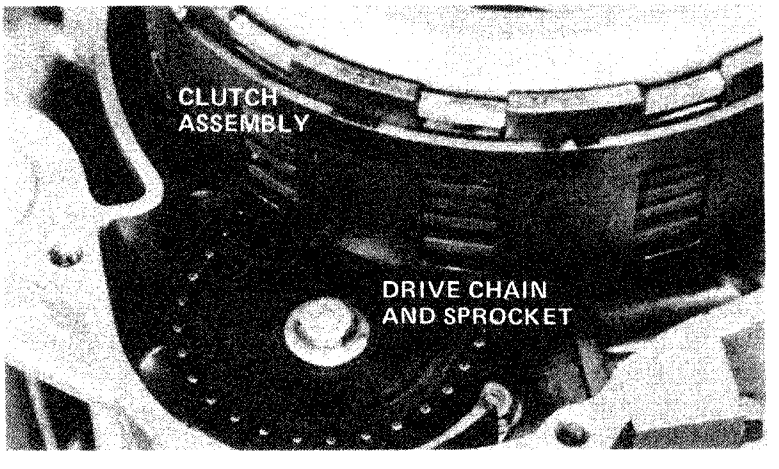

© 1978 American Honda Motor Co., Inc.
Printed in U.S.A. 7 78

LUBRICATION SYSTEM
OIL PUMP INSPECTION

Remove the three scavenge pump bolts.

Remove the scavenge pump.

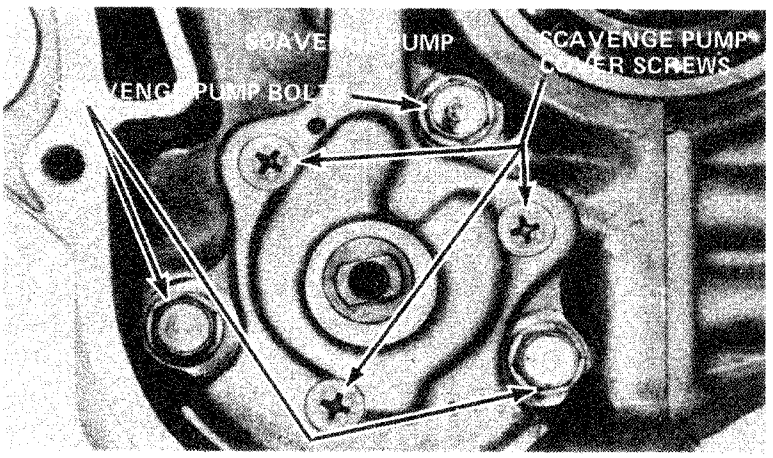

OIL PUMP INSPECTION

Remove the pump covers.
Inspect the pumps for damage and wear.

Measure pump tip clearance.

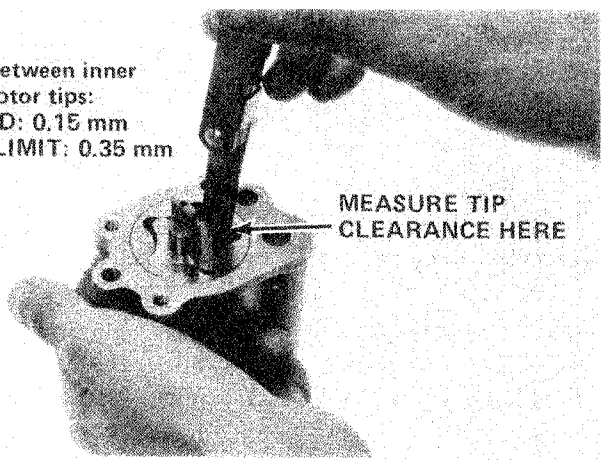

Measure pump body clearance.

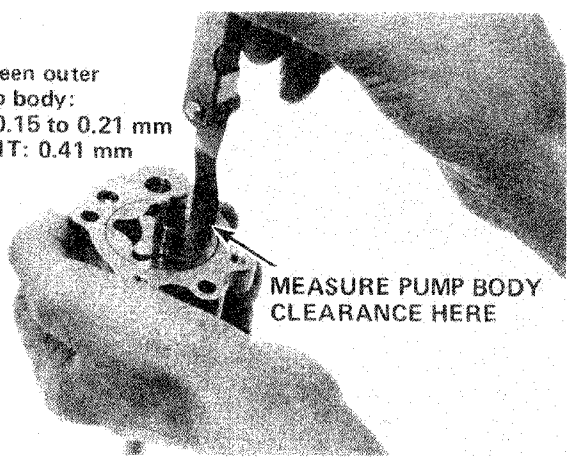

© 1978 American Honda Motor Co., Inc.
Printed in U.S.A. 7-78

Measure pump end clearance.

Lay straight edge on pump body.

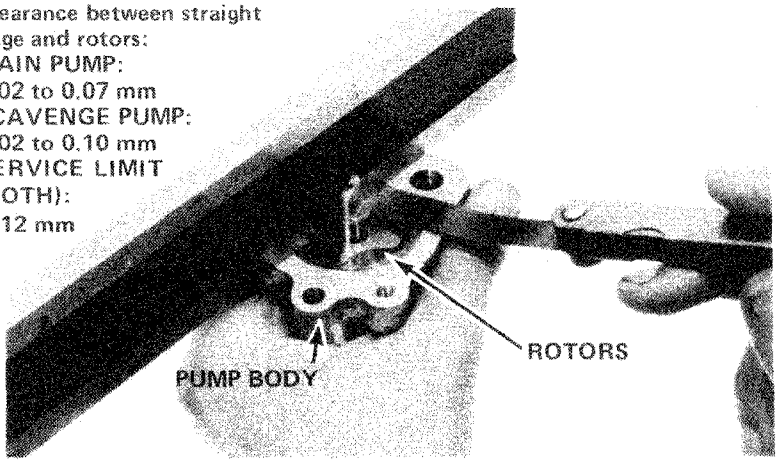

Disassemble, clean, dry, and relubricate the pumps.

CAUTION

Be sure that the pressure relief valve in the main oil pump moves freely.

Pump Assembly and Installation

Slide the pump body over the pump shaft and reassemble:

- washer
- drive pin
- outer rotor
- inner rotor

CAUTION

The punch marks on the main oil pump outer rotor's must be facing out when the rotors are installed in the pump body.

Install the following:

- pump cover
- drive chain and sprockets
- clutch assembly
- engine covers.

Use new O-rings and gaskets.

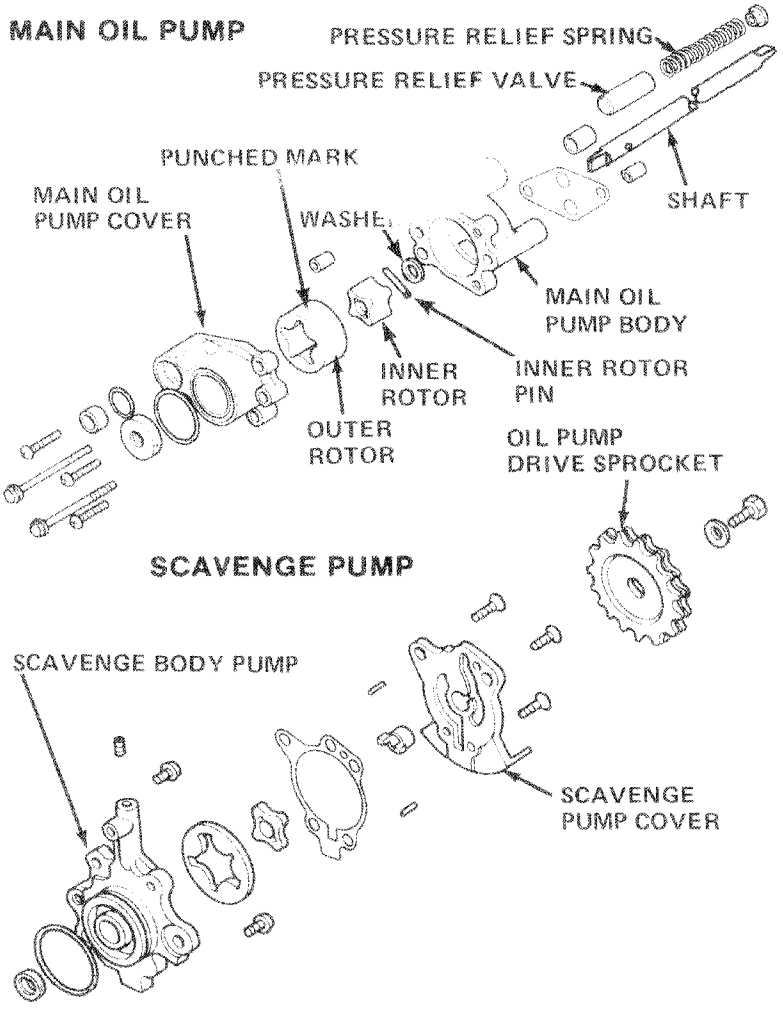

GL-1000 SHOP MANUAL
© 1978 American Honda Motor Co., Inc.
Printed in U.S.A. 7-78

OIL STRAINER

If any foreign materials are found upon oil pump inspection, or if the oil pumps are damaged, the oil strainer should be cleaned and inspected. Also the oil filter should be replaced and the oil should be changed. If the oil strainer is to be removed with the engine in the frame, follow the procedure outlined in Section 10.

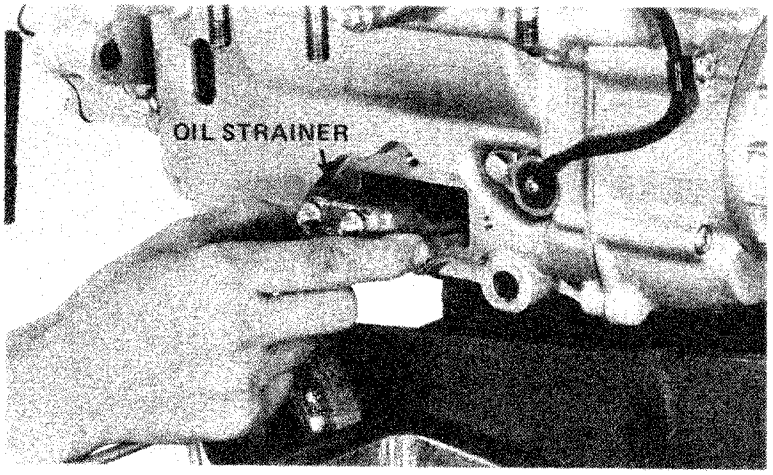

OIL PRESSURE WARNING SWITCH

Testing of the oil pressure warning switch is described in Section 17.

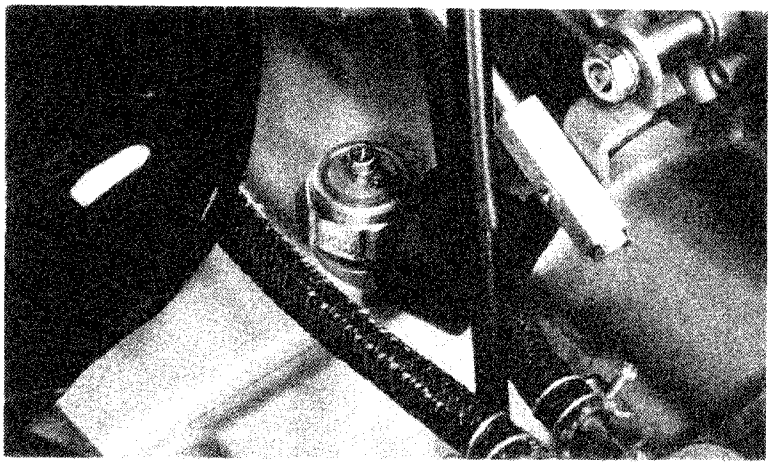

© 1976 American Honda Motor Co., Inc.
Printed in U.S.A. 7-78

OIL CONTAMINATION

Inspect the valve train area for dark gummy deposits indicating coolant leakage into the engine oil. If contamination is evident, remove the camshafts and valve train for access to the casting core plugs.

NOTE
See Section 5 for valve train removal and reassembly.

If evidence of coolant leakage is found around the core plugs, drain the coolant and remove the core plugs. Apply Permatex gasket sealer or silicone to seal the threads and re-install the core plugs.

NOTE
If no evidence of coolant leakage is found at the core plugs, remove the cylinder heads and inspect the head gaskets. See Section 5 for cylinder head removal procedure.

When oil contamination is present commercial gum and sludge remover can be used to purge engine of contaminants. See Page 7-4 for suggested brand.

WARNING
Do not breathe sludge remover fumes. Provide adequate ventilation while the engine is running. Observe the manufacturer's instructions regarding use of gum and sludge remover.

Change oil and filter.

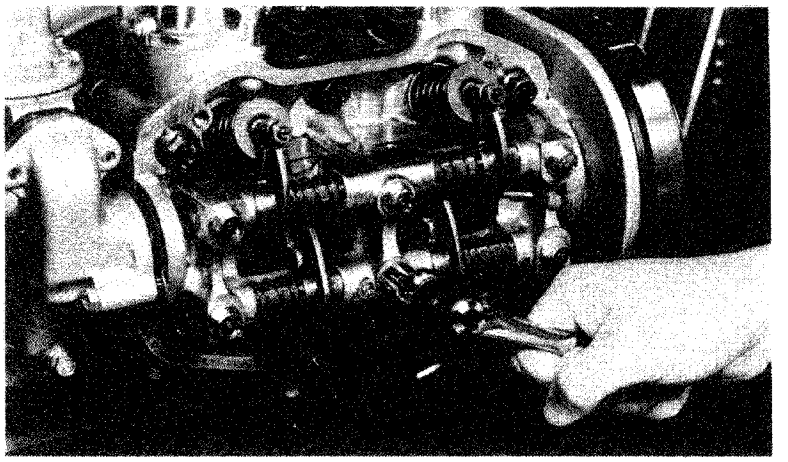

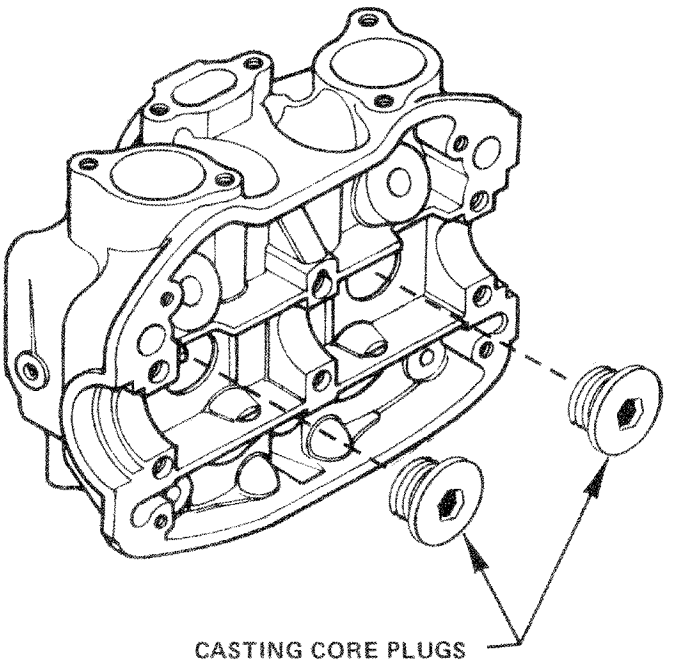

CASTING CORE PLUGS
TORQUE TO: 5 to 6 kg-m
(36-43 ft-lb)

© 1976 American Honda Motor Co., Inc.
Printed in U.S.A. 7-78

8
COOLING SYSTEM

8

SERVICE INFORMATION 8-2
TROUBLESHOOTING 8-5
COOLANT LEVEL CHECK 8-6
FLUSHING & COOLANT REPLACEMENT 8-6
SYSTEM TESTING & INSPECTION 8-8
RADIATOR & FAN 8-10
WATER PUMP 8-12
THERMOSTAT 8-13

© 1978 American Honda Motor Co., Inc.

Printed in U.S.A. 7-78

SERVICE INFORMATION

Specifications

Temperatures
- Lowest mark on temperature gauge: 60°C (140°F)
- Thermostat begins to open: 80° to 84°C (176° to 183°F)
- Fan turns off: 98° to 97°C (199° to 207°F)
- Fan turns on: 98° to 102°C (208° to 216°F)
- High end of normal zone on gauge: 110°C (230°F)
- Begin hot zone on gauge: 120°C (248°F)

Coolant
- Capacity:
  - Radiator and engine: 2.8L (3 qt)
  - Reserve tank: .4L (.4 qt)
  - Total System: 3.2L (3.4 qt)
- Freezing Point (Hydrometer test):
  - 50% Distilled water + 50% ethylene glycol: −37°C (−34°F)
  - 45% Distilled water + 55% ethylene glycol: −44.5°C (−48°F)
  - 55% Distilled water + 45% ethylene glycol: −32°C (−25°F)
- Boiling Point (with 50-50 mixture):
  - Unpressurized: 107.7°C (226°F)
  - Cap on, pressurized: 125.6°C (258°F)

Radiator Cap
- Relief pressure: 0.75 to 1.05 kg/sq cm (10.7 to 14.9 psi)

Fan Motor
- Type: 12V DC
- Rotation: Counterclockwise (viewed from engine side)
- Current, speed, and load:
  - 1.1A max. at 2300 rpm without blade
  - 3.5± 0.4A 1900 ± 250 rpm with blade

Fan Switch
- Rating: 7A
- Temperature cycle:
  - FAN ON at 98° to 102°C (208° to 216°F)
  - FAN OFF at 93° to 97°C (199° to 207°F)

Thermostat
- Begins to open: 80° to 84°C (176° to 183°F)
- Fully open: 93° to 96°C (199° to 205°F)
- Valve lift: Minimum of 8mm at 95°C (0.315 in at 203°F)

© 1976 American Honda Motor Co., Inc.
Printed in U.S.A. 7-78

COOLING SYSTEM SERVICE INFORMATION

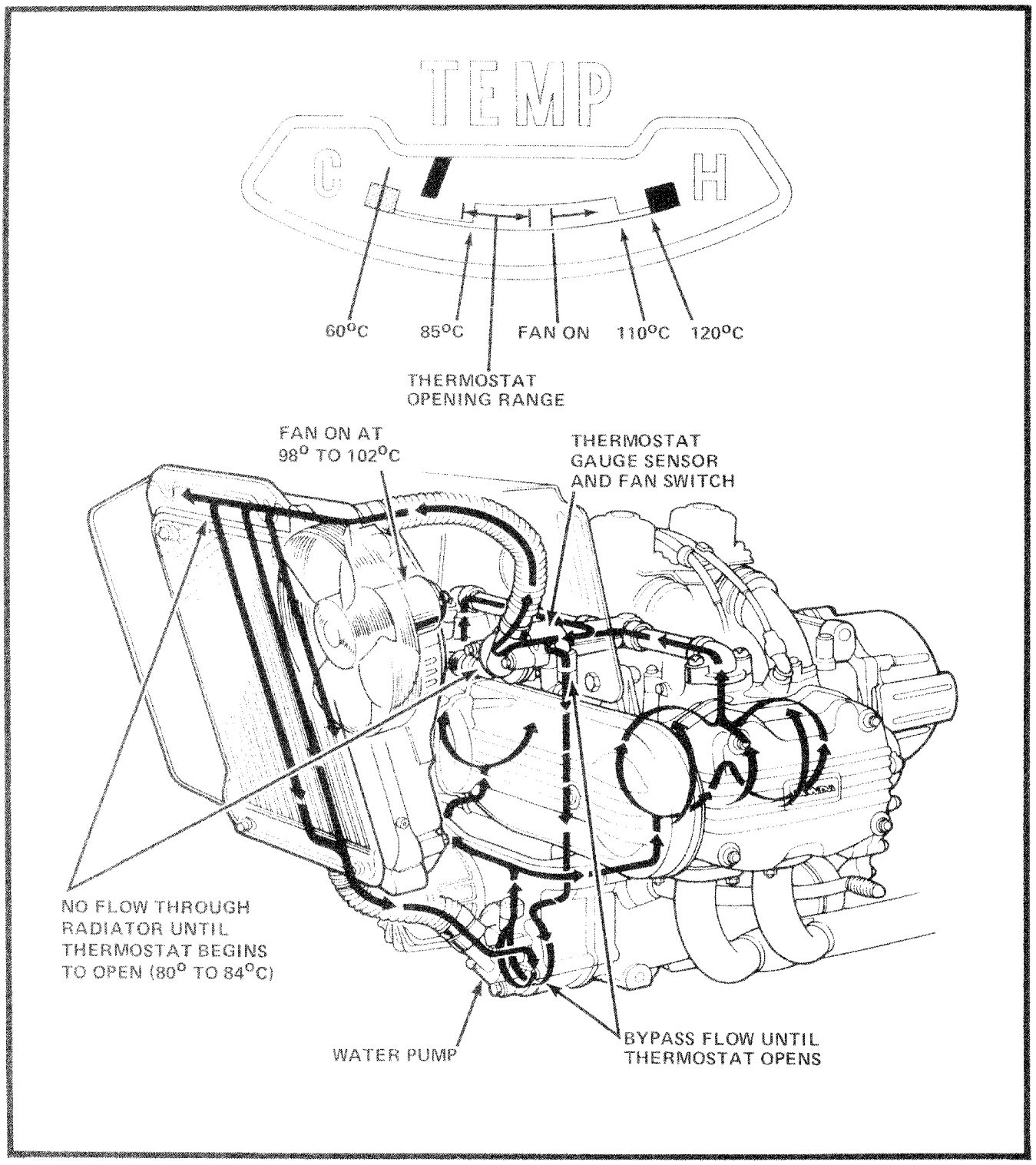

© 1976 American Honda Motor Co., Inc.
Printed in U.S.A. 7-78

Torque Values

Oil drain bolt: 350 to 400 kg-cm (25 to 29 ft-lb)
Oil filter center bolt: 270 to 330 kg-cm (235 to 287 in-lb)
6mm Case bolts: 100 to 140 kg-cm (87 to 122 in-lb)
8mm Case bolts: 180 to 220 kg-cm (157 to 191 in-lb)

Working Practice

Use new gaskets and O-rings when installing or replacing cooling system parts.

Use only distilled water and ethylene glycol in the cooling system. Do NOT use alcohol-based antifreeze.

Add coolant at cap on reserve tank. Do not remove radiator cap except to refill or drain the system.

WARNING

Do not remove the radiator cap when the engine is hot. The coolant is under pressure and severe scalding could result.

Tools and Materials

Cylinder leak tester
Gasket scraper
Flushing compound - Any brand recommended for aluminum block engines
Antifreeze tester
Radiator pressure tester: HC 41033
Thermometer, pan, and hot plate or burner for checking thermostat
Thread sealer

© 1976 American Honda Motor Co., Inc.
Printed in U.S.A. 7-78

COOLING SYSTEM TROUBLESHOOTING

TROUBLESHOOTING

Engine Temperature Too Low:

1. Defective temperature gauge
2. Defective temperature gauge sensor
3. Thermostat stuck open
4. Low ambient temperature

Engine Temperature Too High:

1. Defective temperature gauge
2. Defective temperature gauge sending unit
3. Passages blocked in radiator, hoses, or water jacket
4. Incorrect ignition timing
5. Thermostat stuck closed
6. Insufficient coolant
7. Radiator cap not holding pressure
8. Fan not working:
   a. Defective thermostatic switch
   b. Defective fan motor
9. Water pump not rotating
10. Water pump impellers damaged
11. Incorrect coolant-water ratio

Insufficient Coolant:

1. External leaks in radiator, hoses or water jacket
2. Raiator cap not holding pressure
3. Coolant leaking into oil
4. Defective head gasket allowing coolant into cylinders
5. Air leak or kink in hose from reserve tank to radiator

© 1978 American Honda Motor Co., Inc.
Printed in U.S.A. 7-78

COOLANT LEVEL CHECK

1. Open the top compartment, remove the tool tray, and open the right side compartment.

2. Check coolant level in the reserve tank with the engine running at normal operating temperature. The coolant level should be between the "FULL" and "LOW" level lines.

   a. If coolant level is low, unscrew the reserve tank filler cap and add coolant to bring the level up to the "FULL" line.

   b. If the reserve tank is empty, stop the engine and allow to cool. Remove the radiator cap as described on page 8-7, step 2; **observe step 2** **WARNING** and CAUTION. Fill the radiator and reserve tank as described on page 8-7, steps 7 & 8.

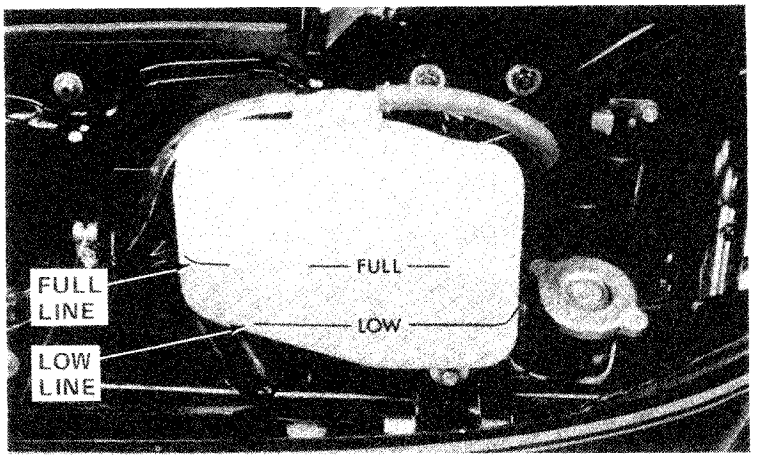

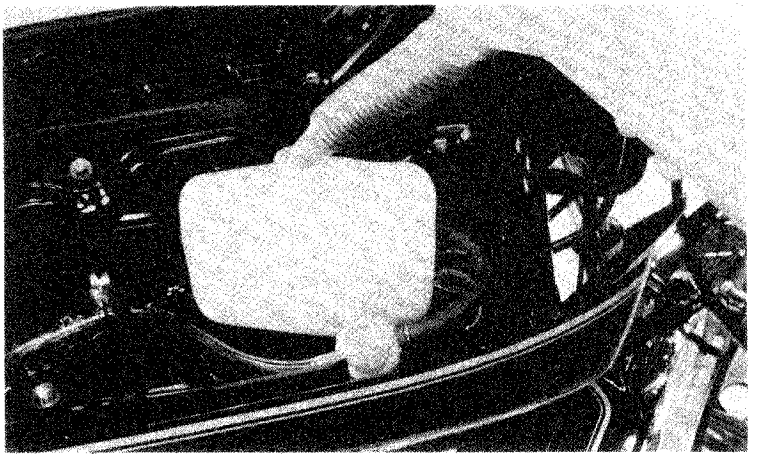

FLUSHING & COOLANT REPLACEMENT

Coolant should be drained and replaced every 36,000 kilometers (22,500 miles). Regardless of mileage, the cooling system should be flushed if there is evidence of lime, scale, or rust. Flushing should be performed while the engine is cool to avoid the hazard of scalding.

1. Unscrew and remove the reserve tank filler cap. The cap's siphon tube must be removed from the coolant in order to avoid siphoning coolant when the radiator cap is loosened or removed.

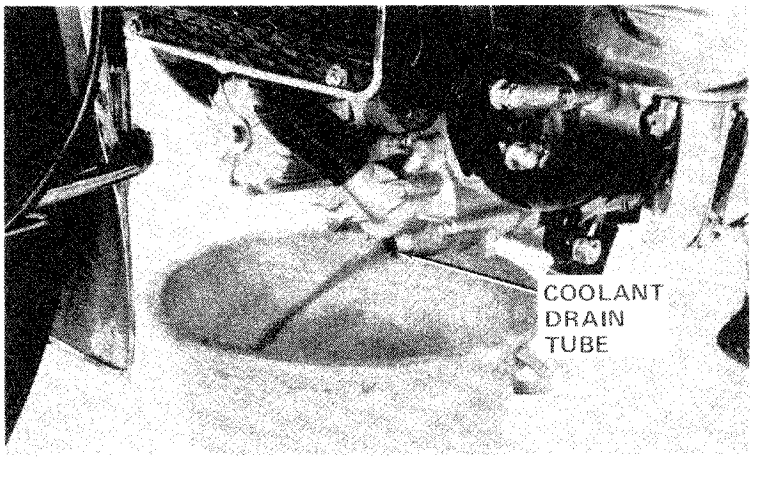

© 1978 American Honda Motor Co., Inc.
Printed in U.S.A. 7-78

FLUSHING & COOLANT REPLACEMENT

2. Twist the radiator cap slowly counterclockwise to release pressure, then press down and twist to remove the cap.

WARNING

Do not loosen or remove the radiator cap while the engine is hot. Scalding hot coolant may be released when the cap is loosened and removed.

CAUTION

If there is coolant in the reserve tank, do not loosen or remove the radiator cap before removing the reserve tank filler cap and siphon tube, otherwise reserve tank coolant will siphon out and spill over the radiator.

3. Place a container under the engine and remove the coolant drain plug. Allow coolant to drain completely. Reinstall the drain plug and tighten to a torque value of 3.5 - 4.0 kg-m (25 - 29 ft-lb).

4. Remove the reserve tank retaining clip and lift the reserve tank free of its holder. Empty and rinse the reserve tank. Reinstall the tank.

5. Fill the radiator with flushing compound designed for use in aluminum block engines. Install the radiator cap. Run the engine for 10 minutes at normal operating temperature, then drain, repeating steps 1 through 4.

WARNING

Flushing compounds are usually highly toxic and corrosive. Observe all precautions indicated by the compound's manufacturer.

6. Fill the radiator with plain water. Run the engine, then drain, repeating steps 1 through 4. Perform this step twice to ensure that all flushing compound has been rinsed from the cooling system.

7. Fill the radiator with a 50 - 50 mixture of distilled water and ethylene glycol antifreeze. Run the engine with the radiator cap removed until the coolant level stabilizes. Add more coolant as necessary. With the radiator filled, install the radiator cap.

8. Fill the reserve tank with the engine running at normal operating temperature. The coolant level should be between the "FULL" and "LOW" level lines. Check for leaks.

© 1978 American Honda Motor Co., Inc.
Printed in U.S.A. 7-78

SYSTEM TESTING & INSPECTION

COOLANT MIXTURE TEST

Test the coolant mixture with an antifreeze tester. A 50 - 50 mixture of ethylene glycol antifreeze and distilled water is recommended for corrosion protection, and to protect against freezing to -37°C (-34°F).

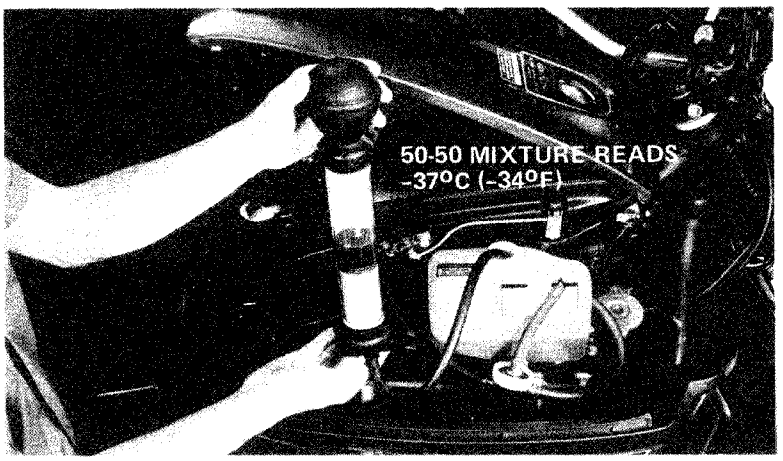

RADIATOR CAP PRESSURE TEST

Test the radiator cap as shown in the accompanying illustration. Replace the radiator cap if it does not hold pressure, or if relief pressure is too high or too low.

WARNING

Do not loosen or remove the radiator cap while the engine is hot. Scalding hot coolant may be released when the cap is loosened and removed.

CAUTION

If there is coolant in the reserve tank, do not loosen or remove the radiator cap before removing the reserve tank filler cap and siphon tube, otherwise reserve tank coolant will siphon out and spill over the radiator.

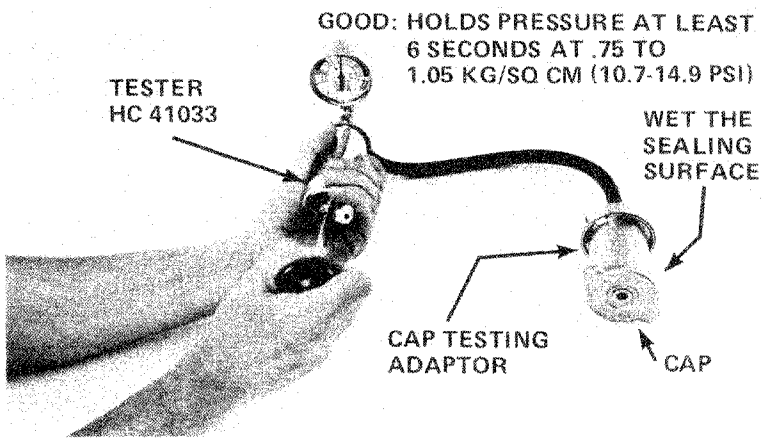

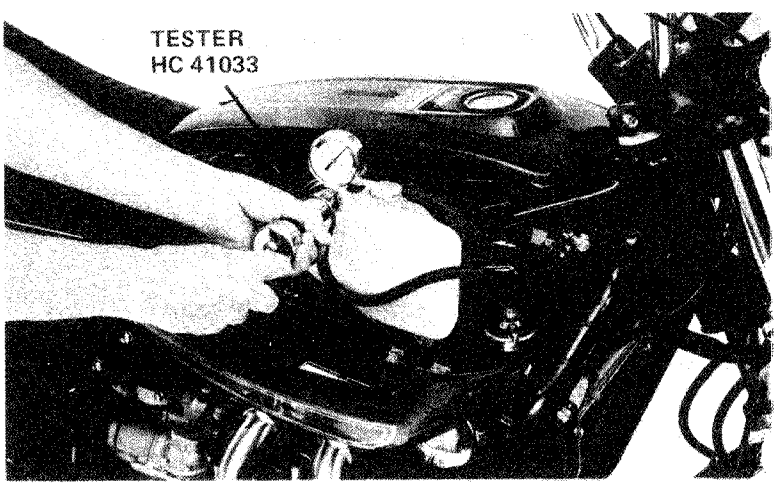

© 1978 American Honda Motor Co., Inc.
Printed in U.S.A. 7-78

COOLING SYSTEM
SYSTEM TESTING & INSPECTION

SYSTEM PRESSURE TEST AND LEAK INSPECTION

1. Install the tester cap on the radiator as shown in the illustration on the bottom of page 8-8 (observe WARNING and CAUTION described on page 8-8). Pressurize the system to 1.05 kg/cm^2 (14.9 psi) and check for leaks. The system should hold pressure for at least 6 seconds.

   Repair or replace system components if the system leaks or will not hold pressure. Also replace hoses which are visibly cracked or deteriorated. Tighten loose hose clamps. Perform this pressure test and check for leaks again after repairs.

   CAUTION

   Excessive pressure can damage the radiator. Do not exceed 1.123 kg/cm^2 (15.9 psi)

2. Release tester pressure by pressing the tester cap stem to one side.

3. Start the engine and allow it to run until it reaches operating temperature (thermostat opens). Observe the pressure reading on the tester gauge. If pressure does not build up while the engine is running, use the tester pump to bring the gauge reading to 0.9 - 1.05 kg/cm^2 (12.8 - 14.9 psi). Do not allow pressure to exceed 1.123 kg/cm^2 (15.9 psi).

   Rapid pressure buildup, or a fluctuating pressure reading, usually indicates a leaking cylinder head gasket. Leaking cylinders can be located by shorting out each spark plug in turn. Gauge needle vibration should decrease or stop when the spark plug of the leaking cylinder is shorted out. Repair as necessary.

4. Upon completion of the system pressure test, reinstall the radiator cap and check coolant level.

TEMPERATURE GAUGE AND SWITCH ELECTRICAL TESTS

Refer to Section 17.

© 1978 American Honda Motor Co., Inc.
Printed in U.S.A. 7-78

RADIATOR AND FAN

RESERVE TANK HOSE
RADIATOR CAP
RADIATOR
TOP HOSE
RESERVE TANK
FAN WIRE CONNECTOR
WIRE SCREEN
FAN SHROUD
FAN MOTOR
RADIATOR SHROUD
FAN SHROUD
FAN
REMOVE TWO BOLTS
BOTTOM HOSE

Radiator and Fan Removal

CAUTION

Disconnect the fan motor wires before removing the radiator.

Drain the coolant. Disconnect the radiator hoses and the reserve tank hose.

Remove the radiator, shroud, fan motor, and fan as an assembly.

Remove the fan shroud and fan. Remove the radiator shrouds, and wire screen. Remove the fan motor and fan.

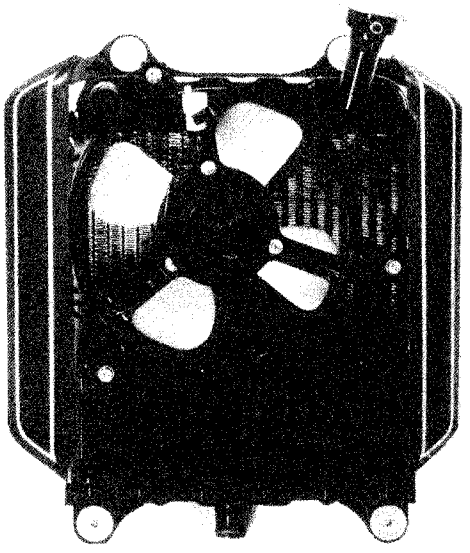

© 1978 American Honda Motor Co., Inc.
Printed in U.S.A. 7-78

COOLING SYSTEM
RADIATOR AND FAN

RADIATOR CORE INSPECTION

Inspect air passages. Remove inspects, mud, and other debris with compressed air or low pressure water.

Straighten bent radiator fins, using two screwdrivers as shown in the accompanying illustration.

Replace the radiator if air flow is restricted over more than 20% of the radiating surface.

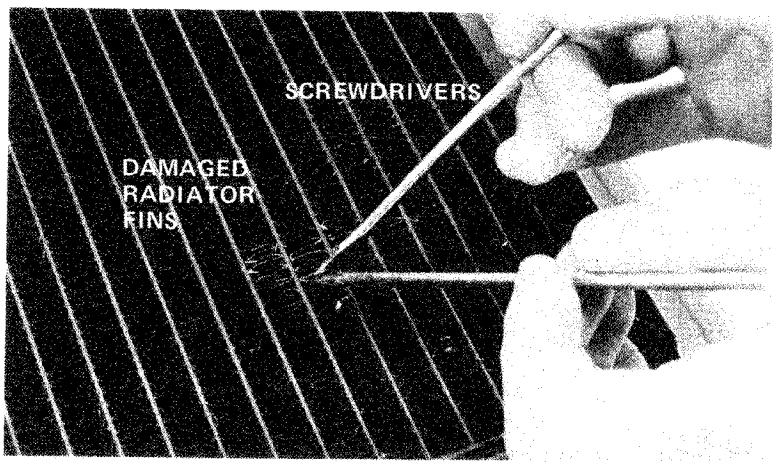

FAN MOTOR TESTING

Connect the fan motor to a 12 volt battery and check operation. The motor should run freely.

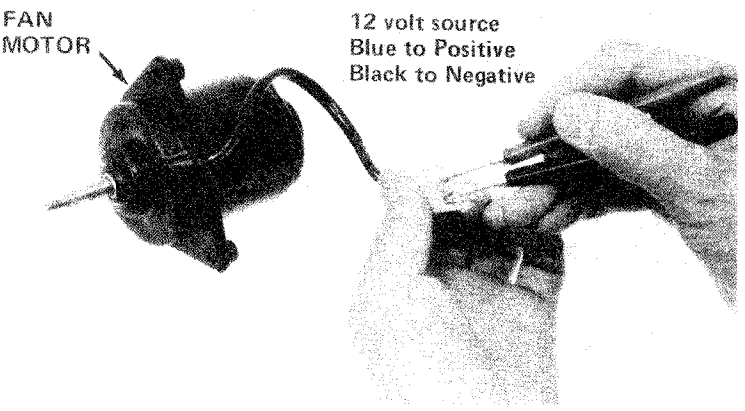

© 1978 American Honda Motor Co., Inc.
Printed in U.S.A. 7-78

WATER PUMP

Removal and Inspection

Drain the oil and coolant. Remove the radiator and fan. Remove the oil filter and the water pump cover.

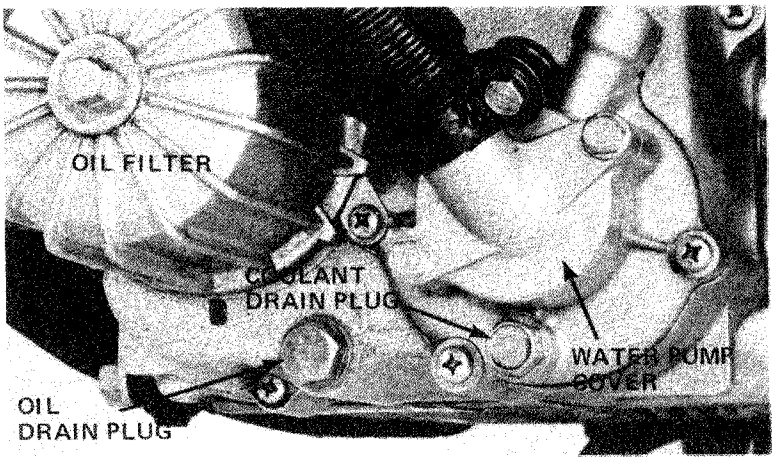

Remove the front engine cover. Remove the three water pump retaining bolts from the inside of the front engine cover.

Observe the location of all O-rings, collars and knockpins.

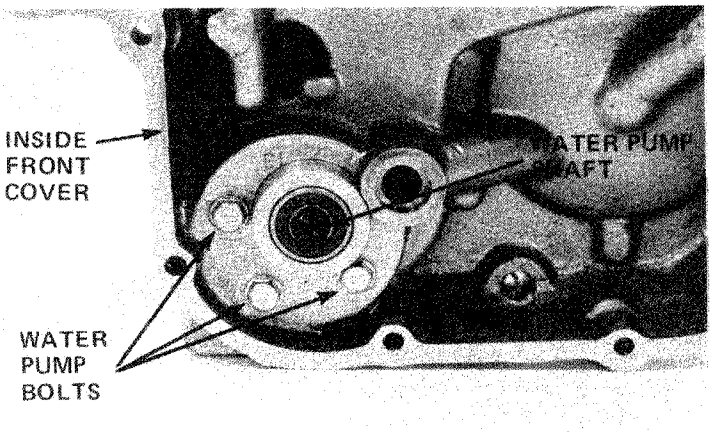

Remove the water pump and inspect it for worn bearings, loose shaft, or damaged impeller.

Do not attempt to repair the water pump. If it is worn or damaged, replace it.

When installing the water pump, use new O-rings and gaskets.

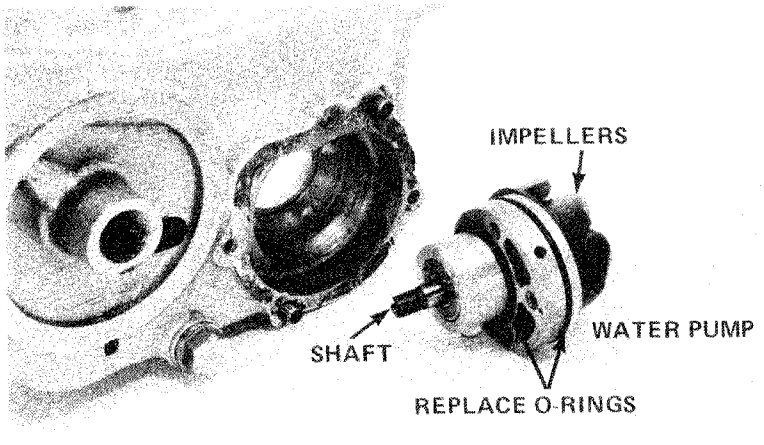

© 1978 American Honda Motor Co., Inc.
Printed in U.S.A. 7-78

COOLING SYSTEM THERMOSTAT

THERMOSTAT

Drain the cooling system. Remove the radiator and fan.

Disconnect the thermostatic switch wires. Remove the thermostat housing cover and the thermostat.

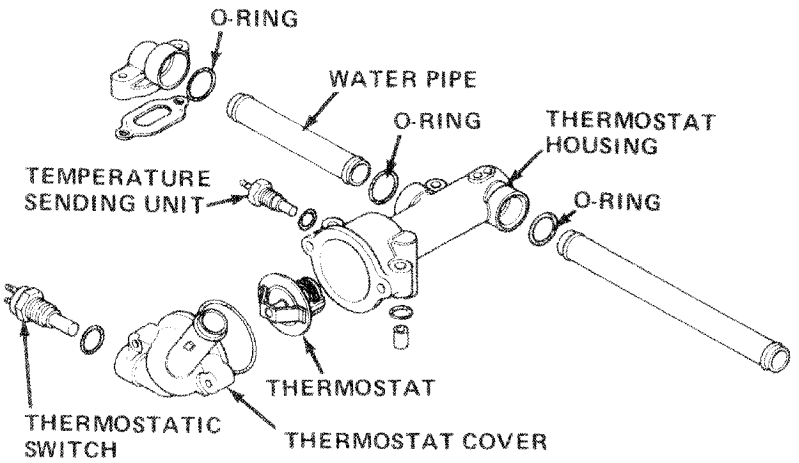

Inspect the thermostat visually for damage. Suspend the thermostat in hot water to check operation.

NOTE

The thermostat and the thermometer must not touch the sides or bottom of the container.

Replace thermostat if valve stays open at room temperature, or if it responds at temperatures other than those specified.

Reassemble, using a new "O" ring on the thermostat cover.

NOTE

If removing other components illustrated above, reassemble with new gaskets and "O" rings. Use thread sealant on the thermostatic switch and temperature sending unit.

START TO OPEN: 80°-84°C
FULLY OPEN: 95°C

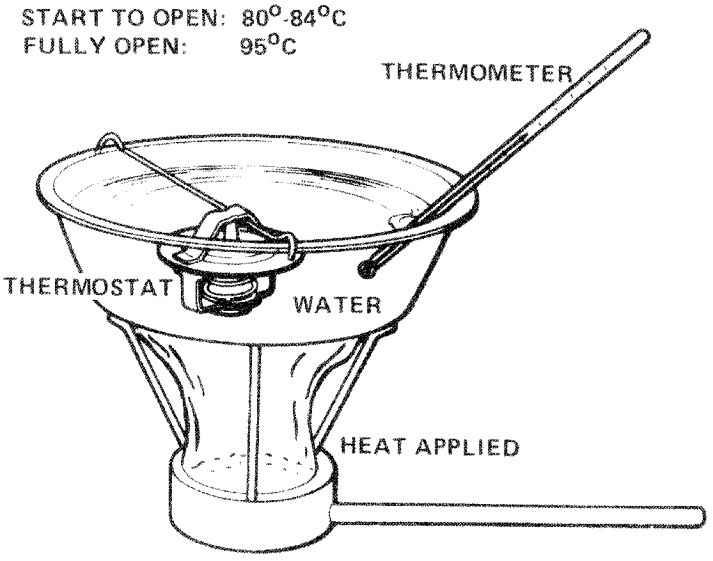

VALVE LIFT: 8 mm (0.32 in) MINIMUM WHEN HEATED TO 97°C FOR FIVE MINUTES.

© 1978 American Honda Motor Co., Inc.
Printed in U.S.A. 7-78

9
FUEL SYSTEM

SERVICE INFORMATION 9-2
TROUBLESHOOTING 9-4
CARBURETOR CIRCUIT DIAGRAMS 9-5
FUEL FILTER/FUEL LINE 9-11
FUEL PUMP 9-12
CARBURETOR AND AIR CHAMBER 9-13
AIR CUTOFF VALVE 9-20
FLOAT LEVEL 9-21
IDLE MIXTURE ADJUSTMENT 9-22
HIGH ALTITUDE ADJUSTMENT 9-23

© 1978 American Honda Motor Co., Inc.
Printed in U.S.A. 7-78

SERVICE INFORMATION

Specifications

Fuel: 86 Pump Octane or higher
Fuel tank capacity: 19L (5.0 US gal) Reserve: 3L (0.8 US gal)

CARBURETION:

CARBURETOR MODEL YEAR	1975	1976	1977	1978	*1978 EC	1979
CARBURETOR MODEL NUMBER	755A	758A	764A	769A	771A	771A
VENTURI BORE DIAMETER	32mm	32mm	32mm	31mm	31mm	31mm
FLOAT LEVEL	21mm (0.827 in)	21mm (0.827 in)	21mm (0.827 in)	21mm (0.827 in)	21mm (0.827 in)	21mm (0.827 in)
STANDARD MAIN FUEL JETS: PRIMARY SECONDARY	# 65 # 125	# 62 # 120	# 62 # 125	# 60 # 120	# 60 # 120	# 60 # 120
STANDARD SLOW FUEL JET	# 35	# 35	# 35	# 35	# 35	# 35
MAIN AIR JETS: PRIMARY SECONDARY	# 120 # 60	# 120 # 60	# 120 # 60	# 120 # 60	# 140 # 60	# 140 # 60
SLOW AIR JET	# 125	# 115	# 110	# 120	# 130	# 130
PILOT SCREW INITIAL SETTING (turns out from fully closed position)	1 3/8	2	2 1/2	1 1/2	See page 9-22	See page 9-22
IDLE SPEED	950 ± 100 rpm	950 ± 100 rpm	950 ± 100 rpm	950 ± 100 rpm	950 ± 100 rpm	950 ± 100 rpm
FAST IDLE SPEED	3500 ± 500 rpm	3500 ± 500 rpm	3500 ± 500 rpm	2000 ± 500 rpm	2000 ± 500 rpm	2000 ± 500 rpm

*Emission Controlled motorcycles (manufactured after December 31, 1977)

Throttle cable: 15 degrees free play at hand grip
Maximum throttle lever operating force: 1 kg
Air Filter: Replaceable paper element
Fuel Filter: Replaceable in-line filter
Fuel Pump Type: cam-operated diaphram pump
Pressure. 0.17 kg/cm^2 (2.4 psi) at cranking speed
0.16 kg/cm^2 (2.3 psi) at 1100 rpm idle
0.14 kg/cm^2 (2.0 psi) at 5000 rpm
Volume: 350 ml (12 oz) per minute at 600 rpm
450 ml (15 oz) per minute at 3000 rpm
500 ml (17 oz) per minute at 6000 rpm

Torque Values

Carburetor-to-air chamber screws: 40 to 60 kg/cm (35 to 52 in-lb)
Stay plate screws: 28 to 42 kg/cm (24 to 37 in-lb)
Air chamber screws: 40 to 60 kg/cm (35 to 52 in-lb)
Throttle linkage center bolt: 40 to 60 kg/cm (35 to 52 in-lb)
Throttle link to carburetor nuts: 40 to 60 kg/cm (35 to 52 in-lb)

Working Practice

Use caution when working with gasoline. Always work in a well-ventilated area and away from sparks or open flames.

When disassembling fuel system parts, note the locations of the O-rings. Replace them with new ones on re-assembly.

The float bowls have drain plugs that can be removed to drain residual gasoline.

The carburetors and carburetor linkage can be disassembled without disturbing the linkage adjustment screws.

Use thread sealant on all screws during re-assembly.

© 1978 American Honda Motor Co., Inc.
Printed in U.S.A. 7-78

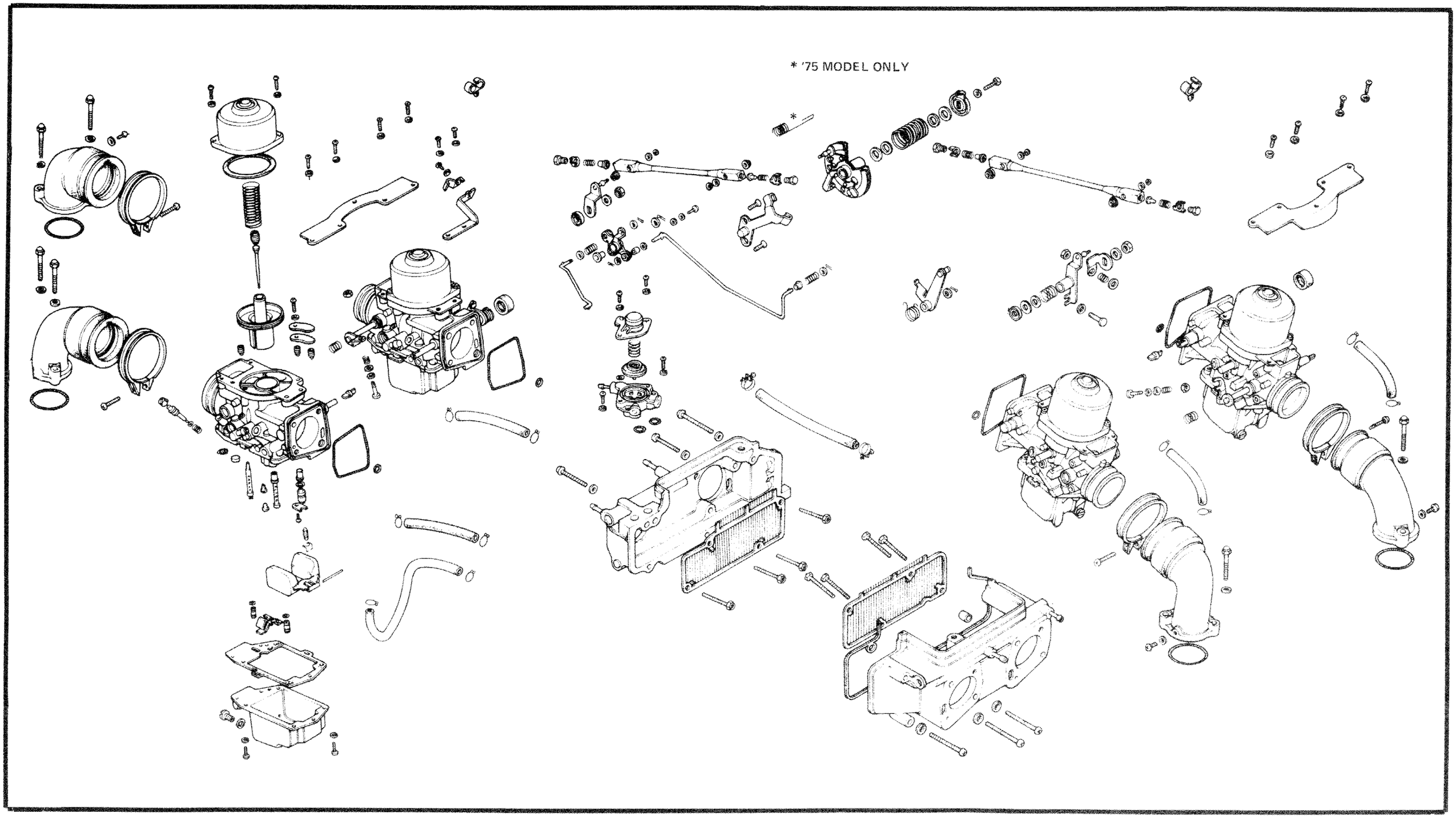

© 1976 American Honda Motor Co., Inc.
Printed in U.S.A. 7-78

Tools and Materials

Fuel pressure gauge
Graduated container (ML)
Small drift punch
Float level gauge HC 23892
Vacuum gauges (set) HC 47978
Thread sealant
Carburetor adjustment wrench HC 37828

TROUBLESHOOTING

Engine Cranks But Won't Start

1. No fuel in tank
2. No fuel getting to cylinders
3. Too much fuel getting to cylinders
4. No spark at plugs -- ignition malfunction
5. Air cleaner clogged

Engine Idles Roughly, Stalls, or Runs Poorly

1. Idle speed incorrect
2. Ignition malfunction
3. Low compression
4. Rich mixture
5. Lean mixture
6. Air cleaner clogged
7. Air leaking into manifold
8. Fuel contaminated
9. Carburetors not synchronized

Lean Mixture: Insufficient Fuel to the Cylinders

1. Carburetor fuel jets clogged
2. Vacuum piston stuck closed
3. Defective fuel pump or fuel pump cam lobe
4. Fuel cap vent blocked
5. Fuel filter clogged
6. Fuel line kinked or restricted
7. Fuel line blocked
8. Carburetor fuel inlet filter screen clogged
9. Carburetor inlet needle stuck closed
10. Float level too low

Rich Mixture: Excessive Fuel to the Cylinders

1. Choke stuck closed
2. Float level set too high or float sticking
3. Needle and seat defective or worn
4. Carburetor air jets clogged

© 1978 American Honda Motor Co., Inc.
Printed in U.S.A. 7-78

FUEL SYSTEM
CARBURETOR CIRCUIT DIAGRAMS

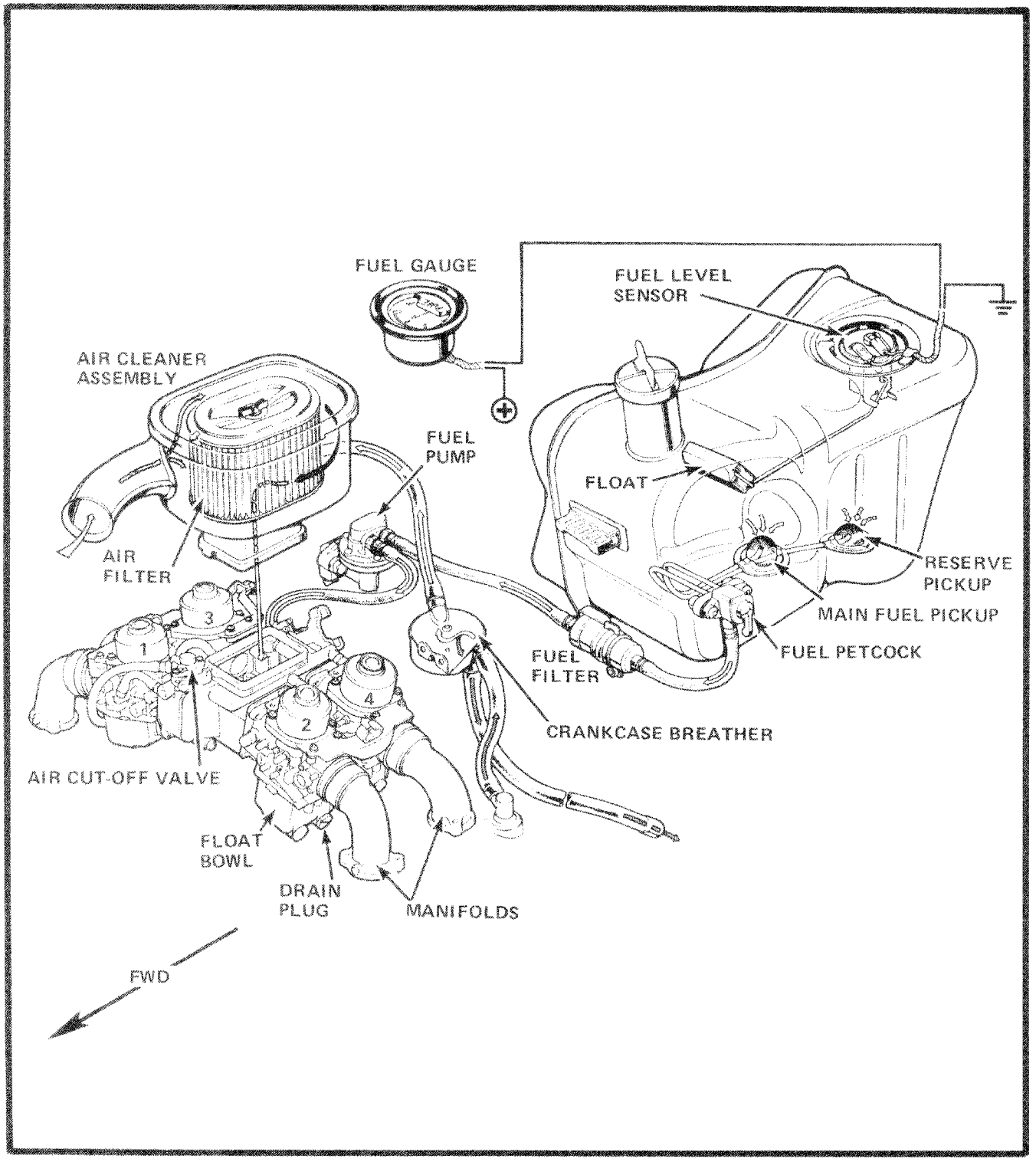

© 1976 American Honda Motor Co., Inc.
Printed in U.S.A. 7-78

CARBURETOR CIRCUIT DIAGRAMS

Internal Parts

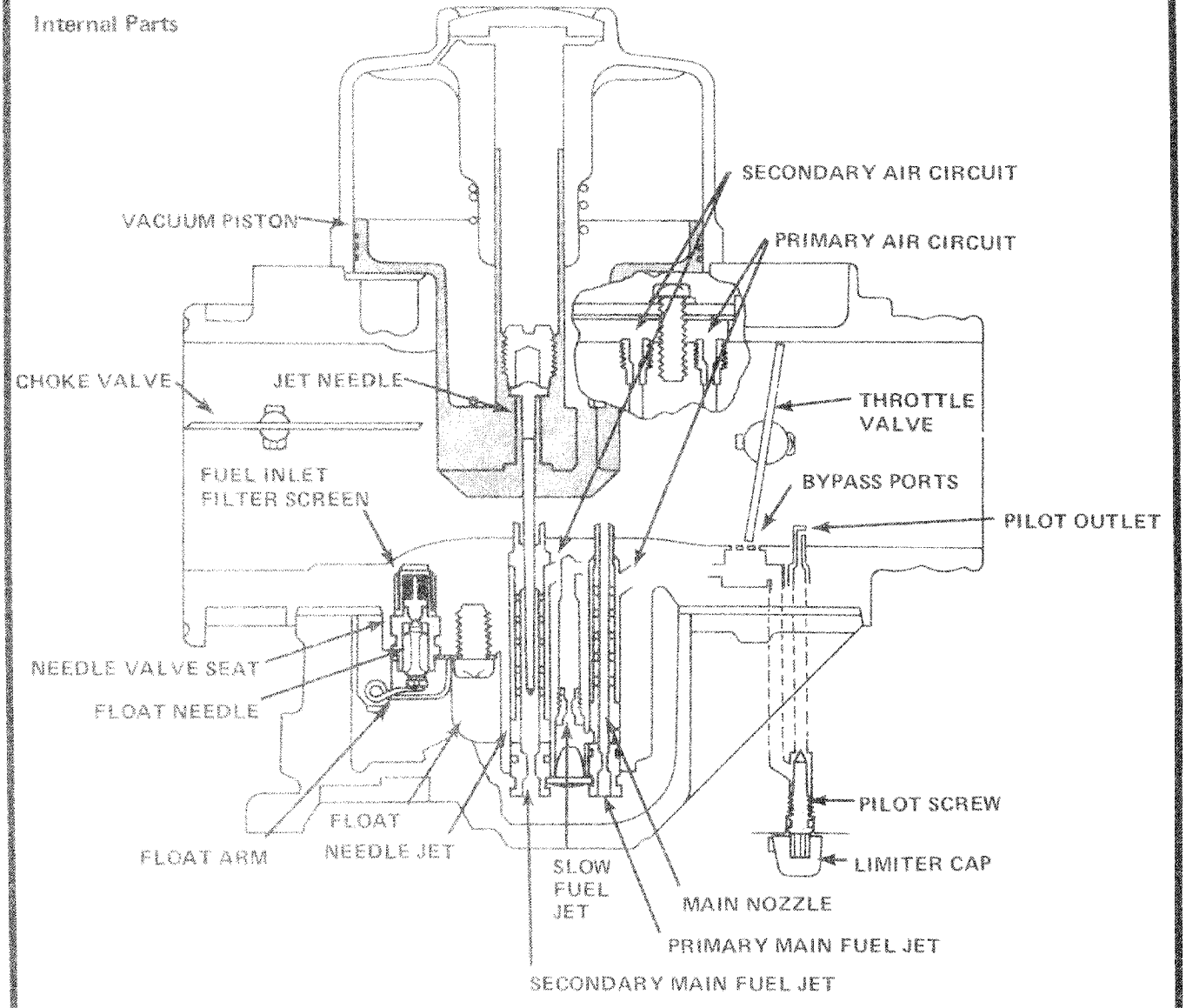

© 1976 American Honda Motor Co., Inc.
Printed in U.S.A. 7-78

FUEL SYSTEM
CARBURETOR CIRCUIT DIAGRAMS

ENGINE RUNNING. AIR-CUTOFF VALVE OPEN ALLOWING MAXIMUM AIR TO SLOW SPEED CIRCUIT.

LEAK HOLE

VACUUM INTAKE

AIR-CUTOFF VALVE

AIR-CUTOFF VALVE VACUUM INTAKE

AIR-CUTOFF VALVE AIR INLET

AIR CUT-OFF VALVE OUTLET

SLOW AIR JET

ENGINE SLOW SPEED FUEL IS INTRODUCED TO THE SLOW FUEL JET CHAMBER THRU THE PRIMARY MAIN JET.

SLOW FUEL JET

PRIMARY MAIN FUEL JET

PILOT SCREW

ON DECELERATION WITH CLOSED THROTTLE TO THE CLOSED POSITION, HIGH VACUUM FROM THE CARBURETOR OVERCOMES THE VALVE DIAPHRAGM SPRING PRESSURE CAUSING THE VALVE TO CLOSE.

VACUUM

LEAK HOLE

AIR

WHEN THE VALVE IS CLOSED, AIR TO THE SLOW SPEED CIRCUIT IS METERED THROUGH A LEAK HOLE IN THE BODY, CREATING A RICH FUEL MIXTURE TO PREVENT BACKFIRING ON DECELERATION.

© 1976 American Honda Motor Co., Inc.
Printed in U.S.A. 7-78

PRIMARY FUEL CIRCUIT 1/4
TO 1/2 OPEN THROTTLE VALVE,
VACUUM PISTON DOWN

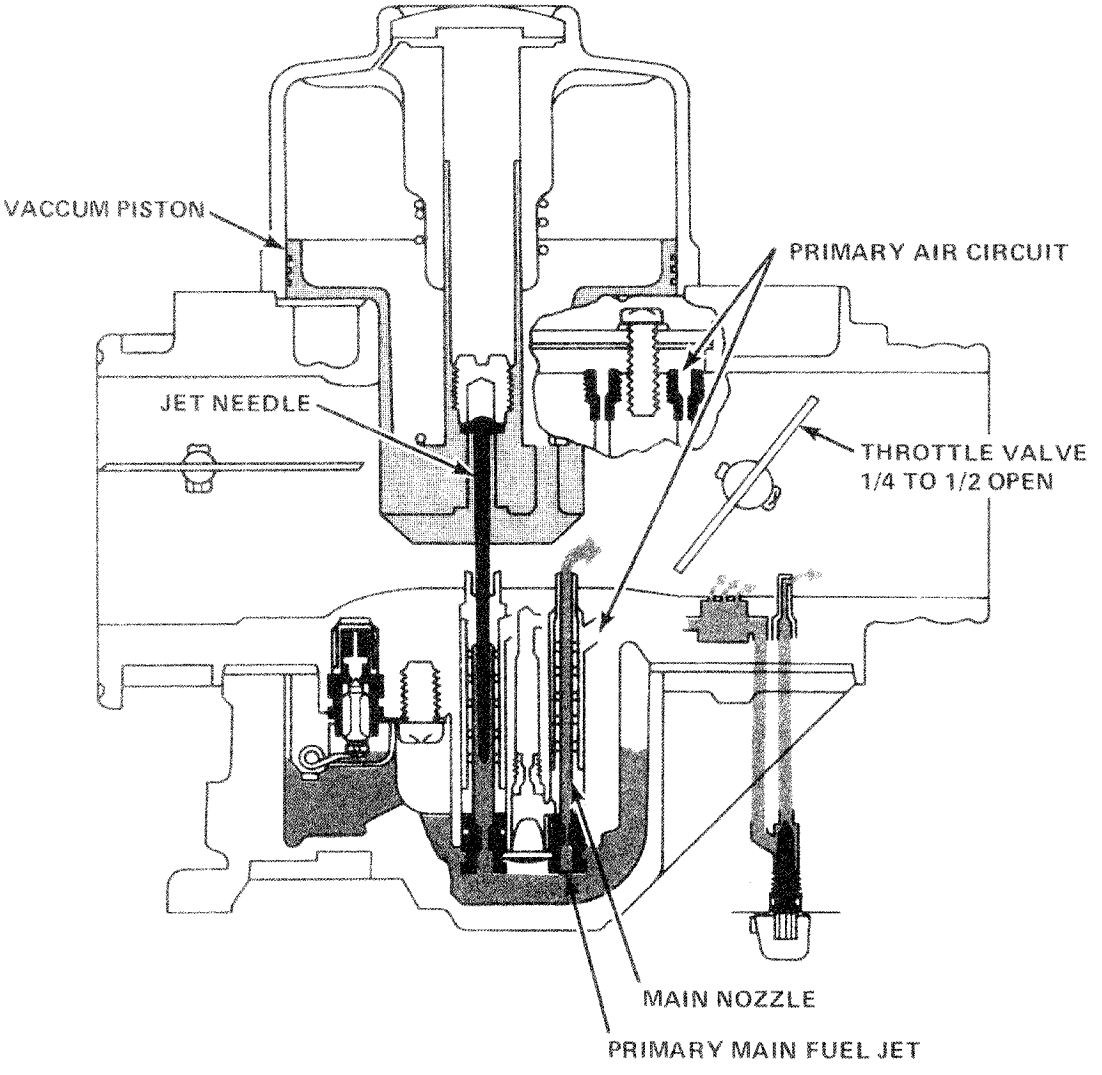

© 1976 American Honda Motor Co., Inc.
Printed in U.S.A. 7-78

FUEL SYSTEM
CARBURETOR CIRCUIT DIAGRAMS

SECONDARY FUEL CIRCUIT 1/2
TO FULL OPEN THROTTLE,
VACUUM PISTON RAISED

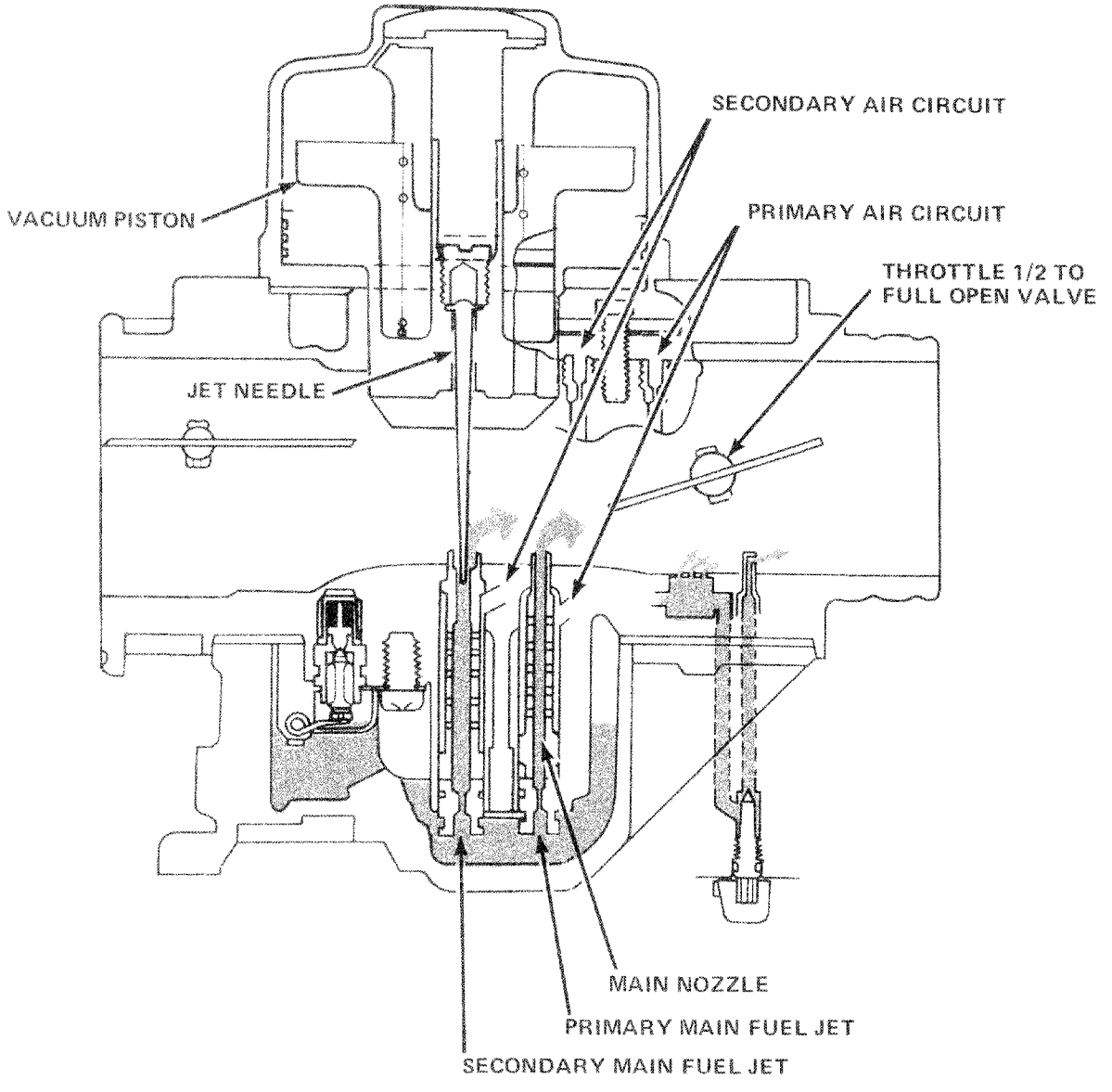

© 1976 American Honda Motor Co., Inc.
Printed in U.S.A. 7-78

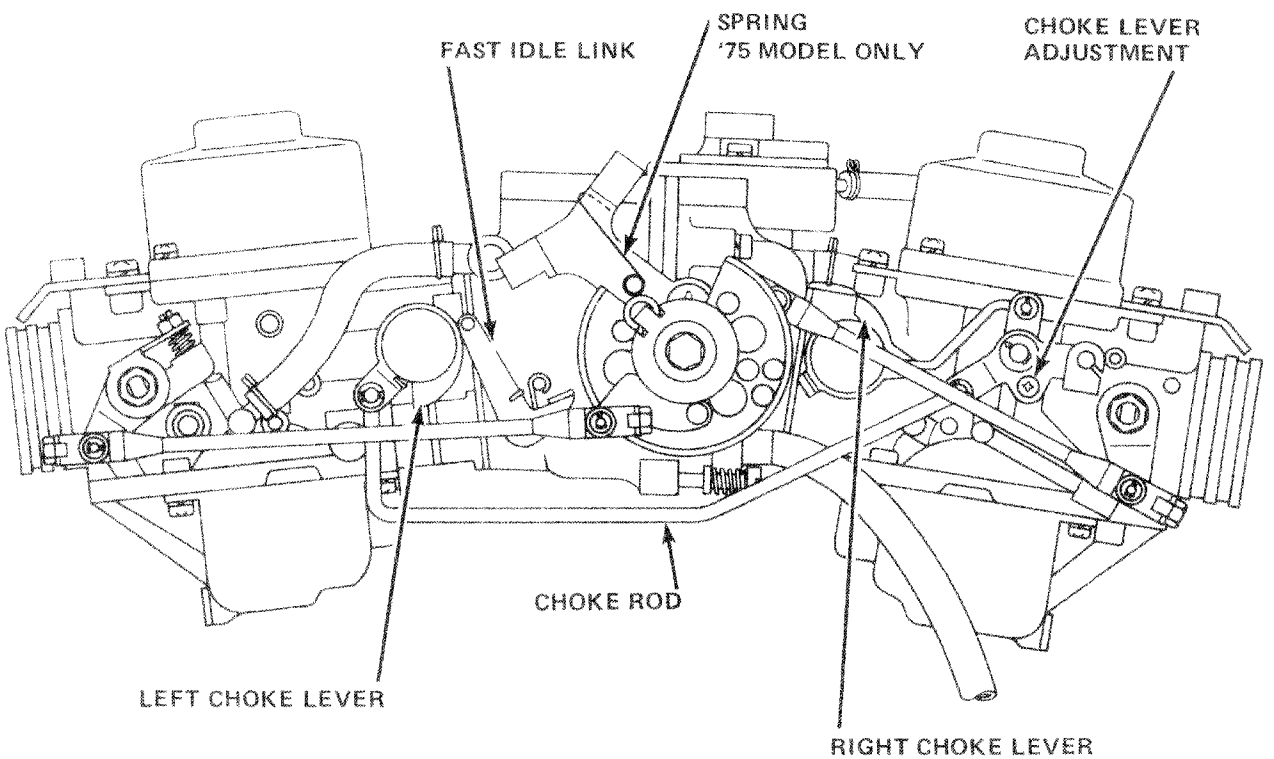

© 1976 American Honda Motor Co., Inc.
Printed in U.S.A. 7-78

FUEL FILTER REPLACEMENT

The fuel filter should be replaced every 36,000 kilometers (22,500 miles).

1. Turn the fuel valve to the "OFF" position.
2. Loosen the fuel tube clamp on the tube connecting the filter to the fuel pump. Disconnect the fuel tube.
3. Remove the mounting nut from the fuel filter bracket, and pull the filter out toward the left side of the engine.
4. Loosen the fuel tube clamp on the tube connecting the filter to the fuel tube. Disconnect the fuel tube.
5. Remove the filter bracket from the used filter and put it on the new filter. Install the new filter and connect fuel tubes.

NOTE
An arrow on the filter body indicates fuel flow direction. Be sure to install the filter with the directional arrow pointed toward the fuel pump.

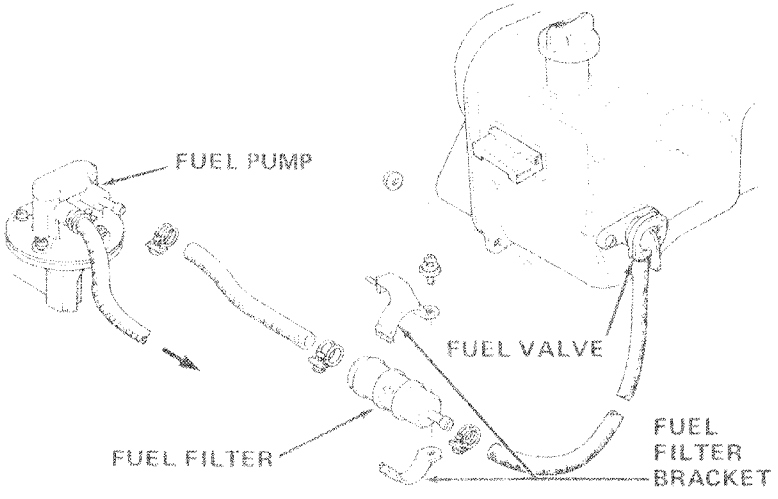

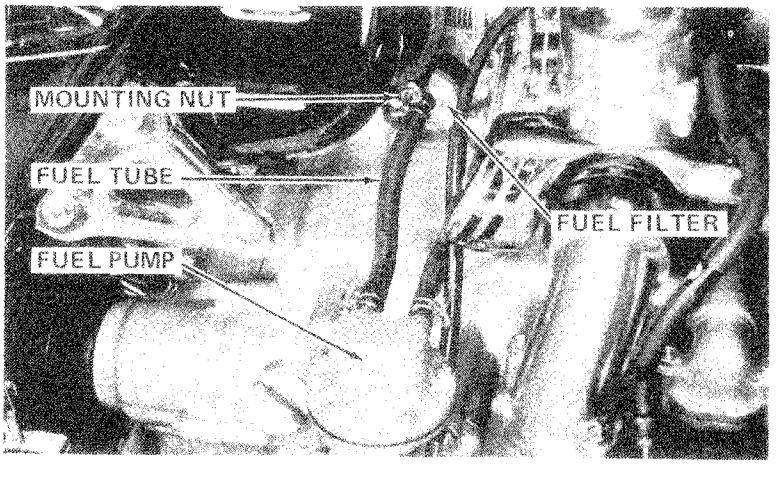

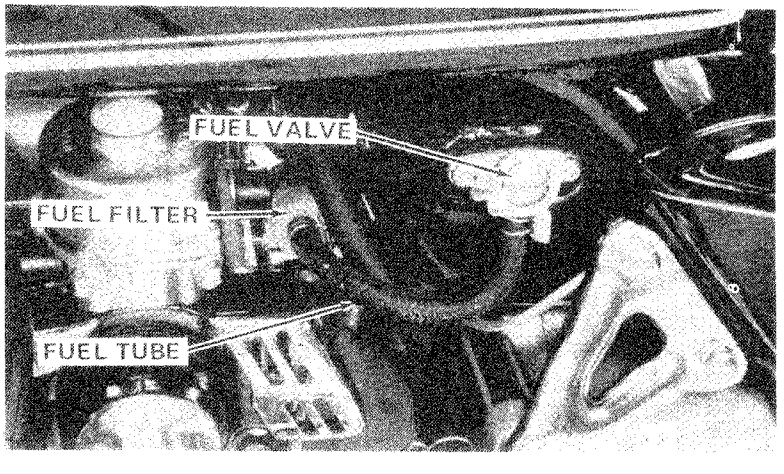

FUEL LINE INSPECTION

Inspect fuel tubes and connections for signs of deterioration, damage, or leakage, and replace parts as necessary.

© 1978 American Honda Motor Co., Inc.
Printed in U.S.A. 7-78

FUEL PUMP

Pressure Test

Connect a fuel pressure gauge to the fuel pump output line with a T-fitting and measure the fuel pump output pressure.

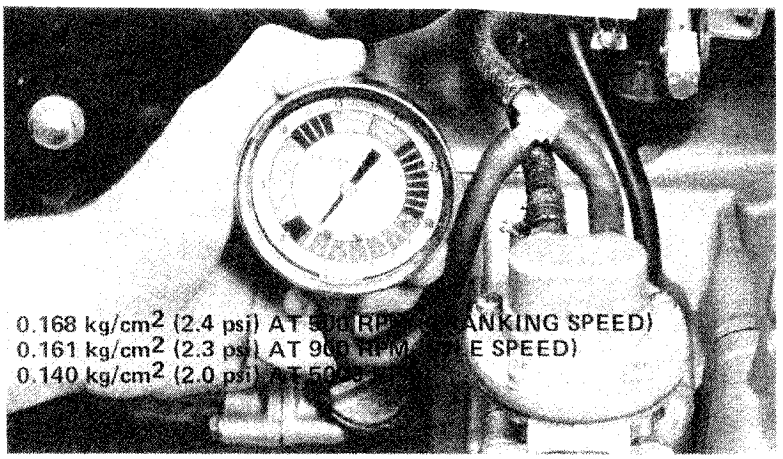

Volume Test

Disconnect the fuel pump output line and measure the volume pumped during a specific period.

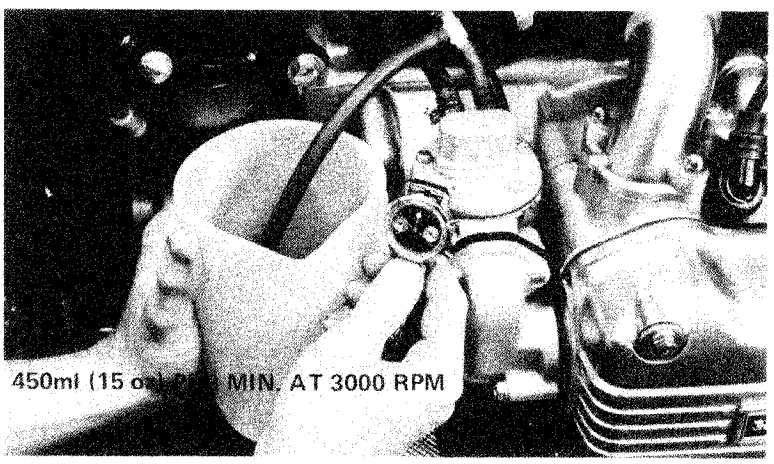

Removal

If the fuel pump does not meet specifications, remove the body cover and see if foreign matter is clogging the valves and ports.

NOTE

The non-return valve cage faces up on the output side of the pump and down on the input side.

Defects, such as a leaking diaphragm, require replacement of the pump as an assembly.

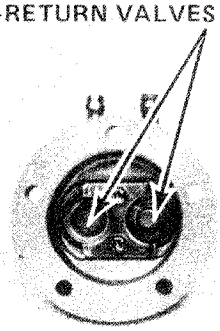

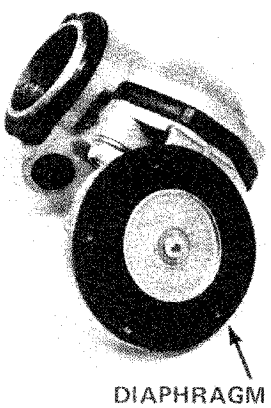

GL-1000 SHOP MANUAL
© 1978 American Honda Motor Co., Inc.
Printed in U.S.A. 7-78

CARBURETOR AND AIR CHAMBER

Removal

Open the service compartment and remove the tool tray.

Remove wing nut and then remove the air cleaner case cover.

Remove the filter element.

Unscrew the bolts securing the air cleaner case to the carburetor air chamber.

Disconnect the crankcase breather from the air cleaner case, then lift out the air cleaner case.

Remove the air cutoff valve.

Disconnect the throttle cable at the LINKAGE END.

Disconnect the spark plug wires at the plugs and detach the wires from the clips on the carburetor assembly.

Disconnect the choke cable from the carburetor link.

Disconnect the fuel pump output hose at the pump body.

Remove the eight manifold-to-head bolts. Tap the carburetor assembly with a rubber hammer to loosen it.

CAUTION

Do not pry between the manifolds and the head because this may damage the mounting surface.

Lift the carburetors and air chamber as an assembly from the left side of the motorcycle. Seal the intake ports with tape.

Loosen the hose clamps and remove the manifold and rubber couplers from the carburetors.

CAUTION

Do not try to remove the rubber couplers from the manifolds. The couplers are bonded to the manifolds. Avoid excessive twisting that may alter their alignment.

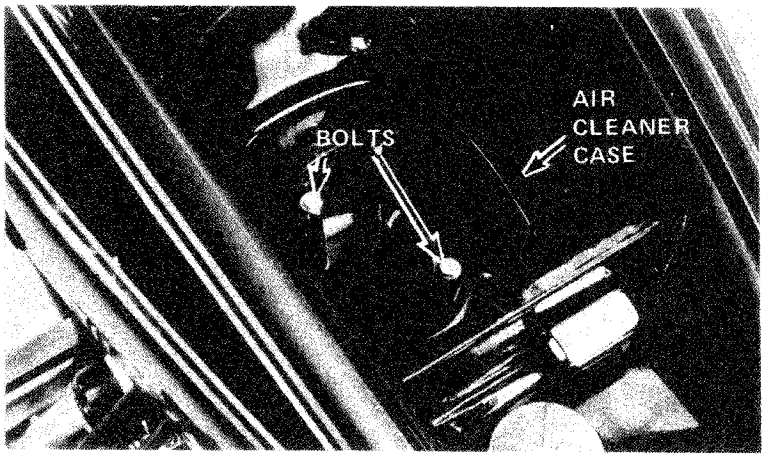

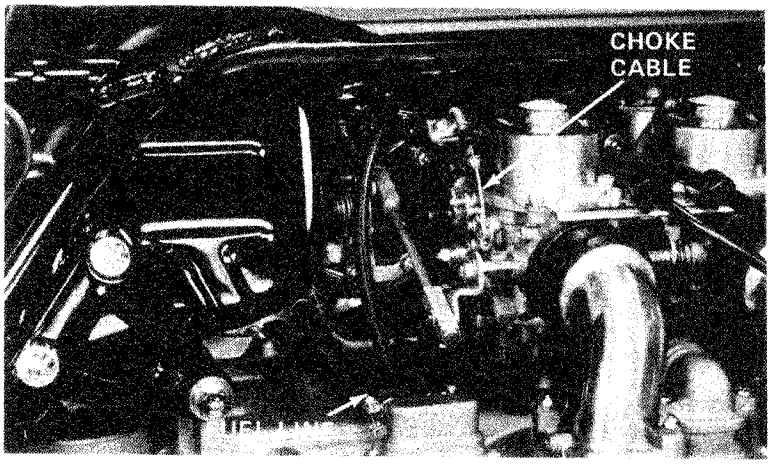

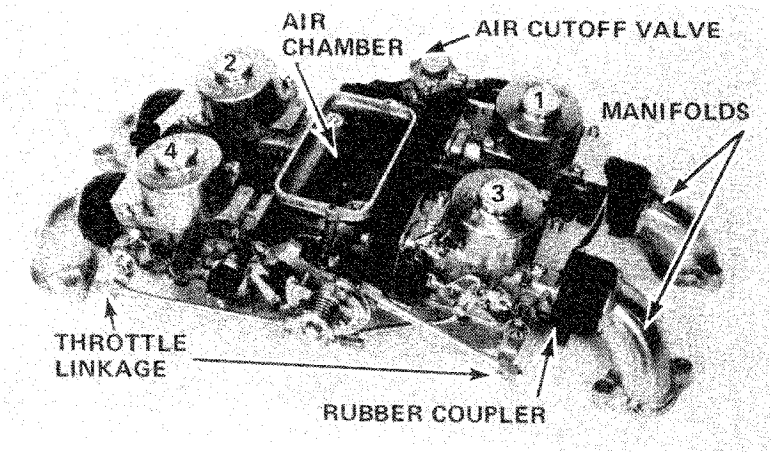

System Disassembly

NOTE

The throttle linkage can be removed without disturbing the adjustment screws.

Remove the cotter pins from the linkage at number 3 and 4 carburetors. Remove the linkage center bolt and the linkage as an assembly from the carburetors.

CAUTION

The main throttle return spring will unwind when the linkage is removed. Note its position for proper re-assembly.

Disconnect the long choke link at number 4 carburetor.

NOTE

No further disassembly of the choke linkage is necessary to separate the carburetors.

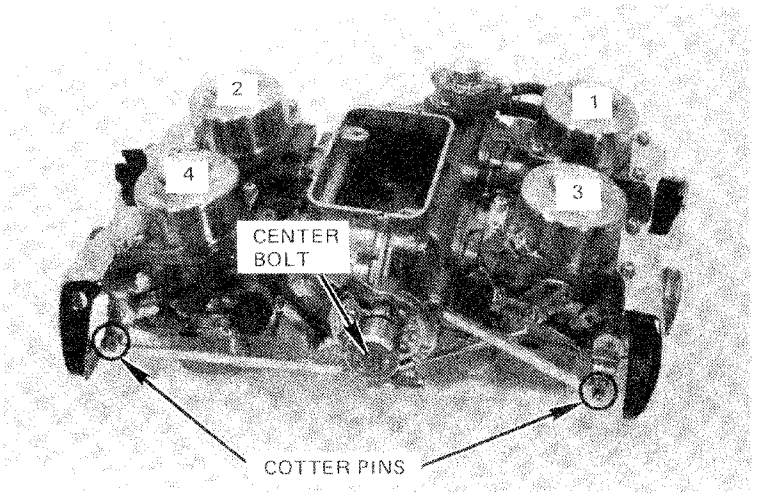

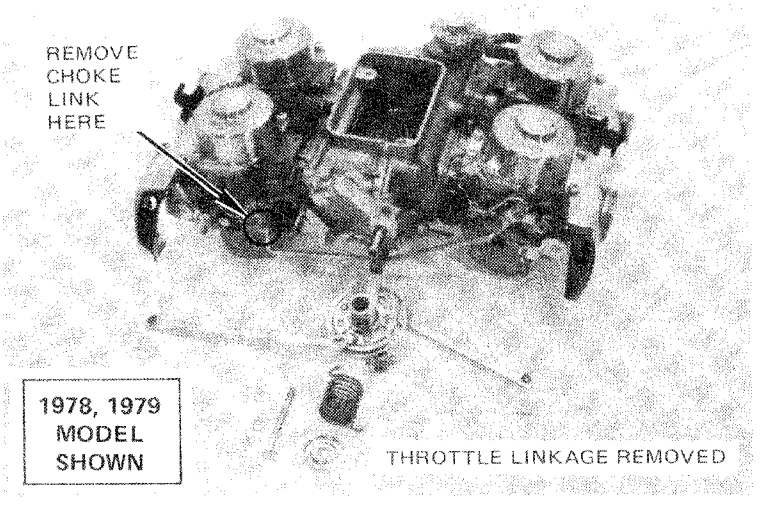

Disconnect the slow air hoses at the air chamber and remove the five screws holding the air chamber together. Separate the air chamber into two halves.

CAUTION

Do not pry the halves apart, the O-ring and mounting surface may be damaged.

NOTE

One air chamber screw is located on the underside of chamber.

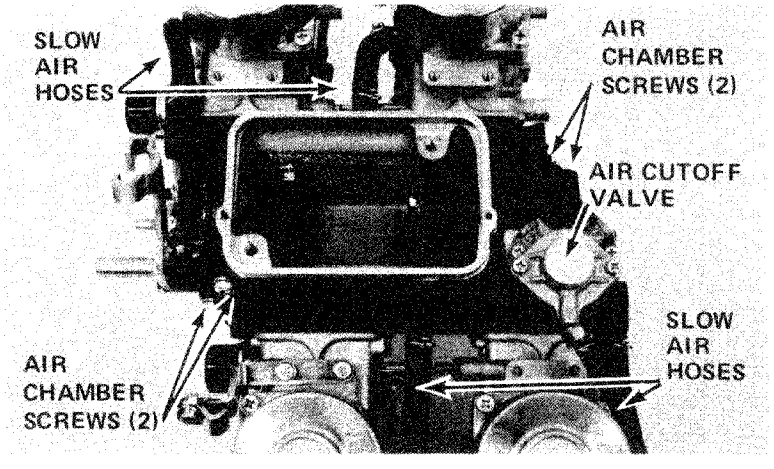

GL-1000 SHOP MANUAL
© 1978 American Honda Motor Co., Inc.
Printed in U.S.A. 7-78

CARBURETOR AND AIR CHAMBER

Bend the locking tabs flat and remove the two bolts attaching each carburetor to the air chamber half. Remove the wire screen from the air chamber.

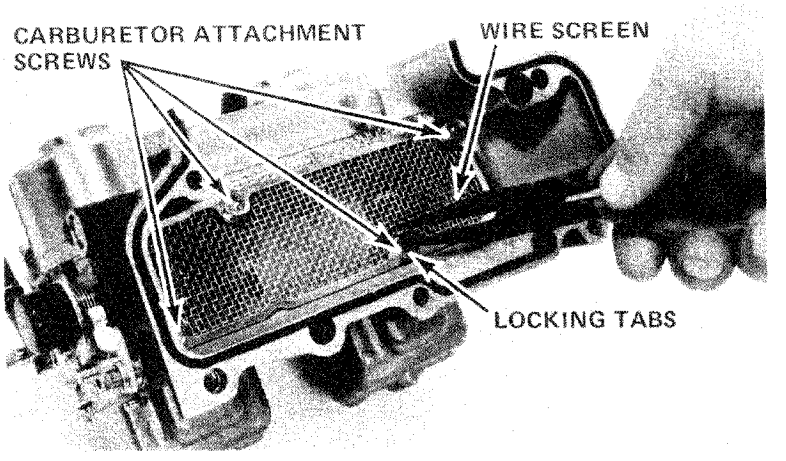

Remove the stay plate holding each pair of carburetors together.

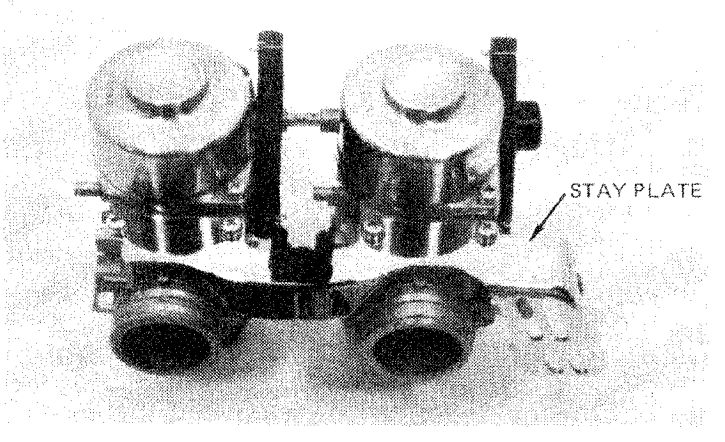

Separate each pair of carburetors at the throttle link and at the choke link. Be careful not to lose the spring placed between the throttle rods or the choke link connector.

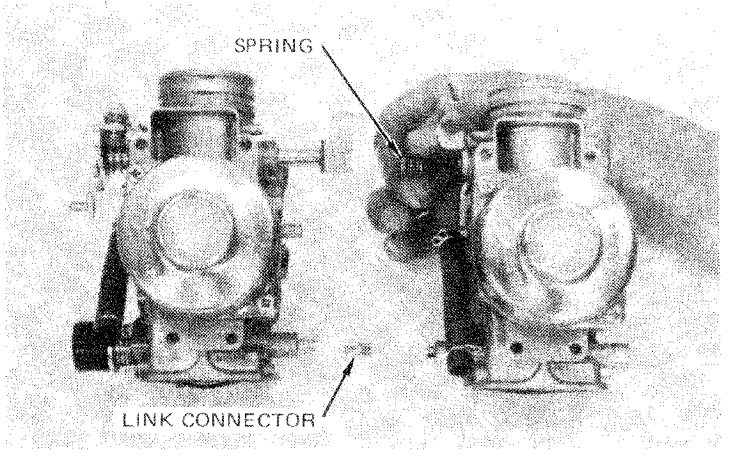

© 1978 American Honda Motor Co., Inc.
Printed in U.S.A. 7-78

Carburetor Disassembly

Remove the vacuum chamber cover and carefully lift out the vacuum piston with its needle and spring.

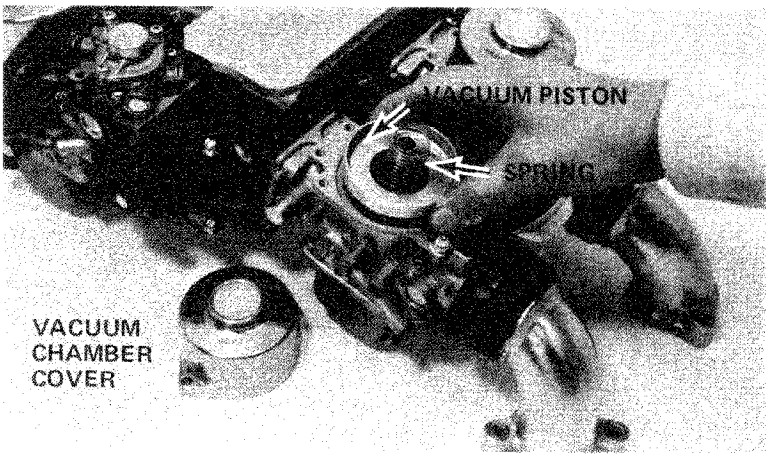

Insert a screwdriver into the center hole of the vacuum piston to remove the screw that holds the secondary needle in place.

Inspect the vacuum piston and carburetor body for signs of wear, nicks, scratches or other damage. Make sure that the piston moves up and down freely in the carburetor body.

NOTE

Do not interchange vacuum pistons or vacuum chamber covers between carburetors.

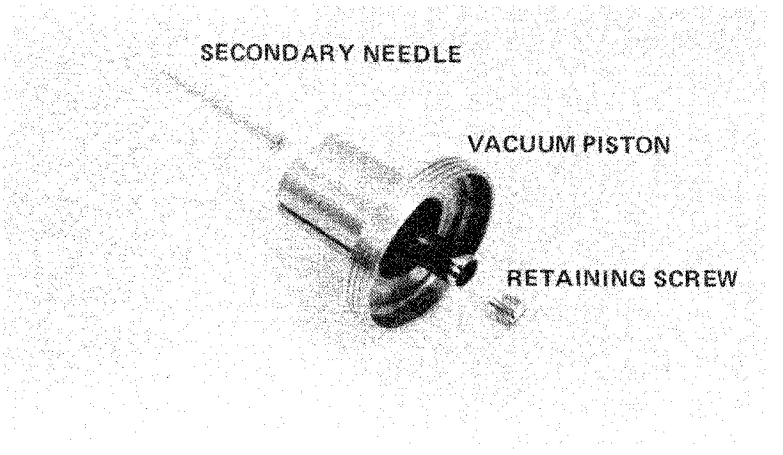

Remove the air jet cover and gasket for access to the air jets.

NOTE

Do not try to clean the jets with drills or wire; which may enlarge the openings.

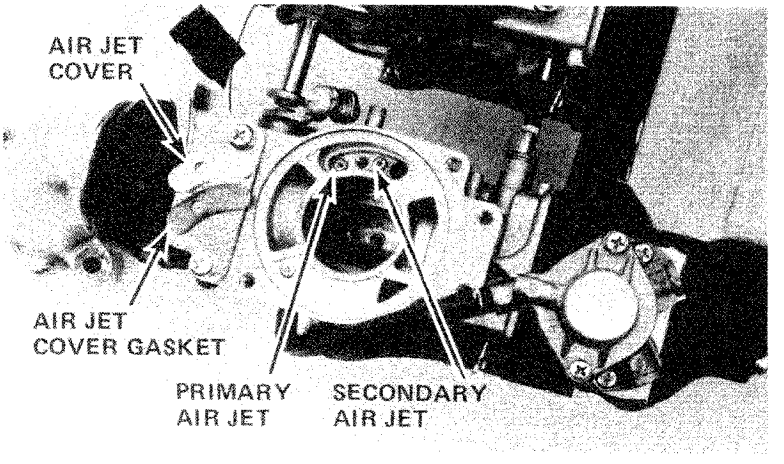

© 1976 American Honda Motor Co., Inc.
Printed in U.S.A. 7-78

CARBURETOR AND AIR CHAMBER

Remove the slow air hose from the carburetor fitting and remove the slow air jet.

NOTE

GL1000's manufactured after December 31, 1977 have press fitted slow air jets which cannot be removed.

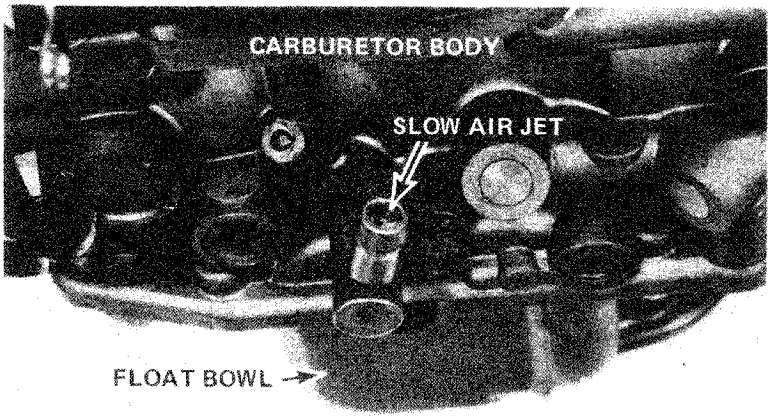

Remove the screws holding the float bowl to the body. Remove the float bowl and gasket.

Gently pull on the metal tab to remove the primary and secondary main jets.

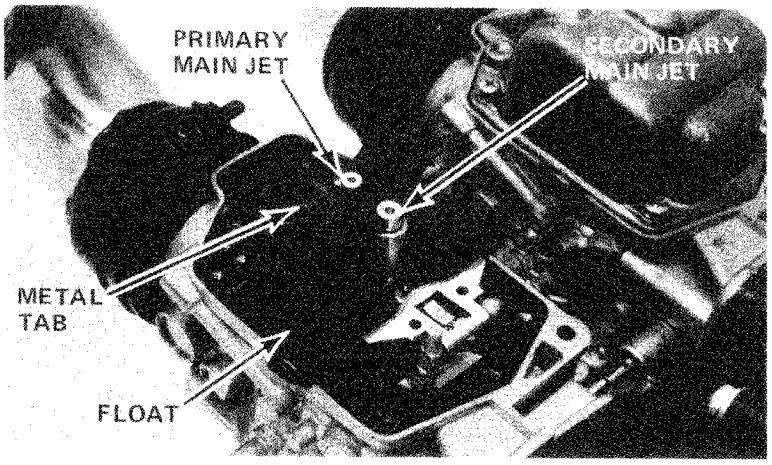

Remove the rubber cap over the slow jet.

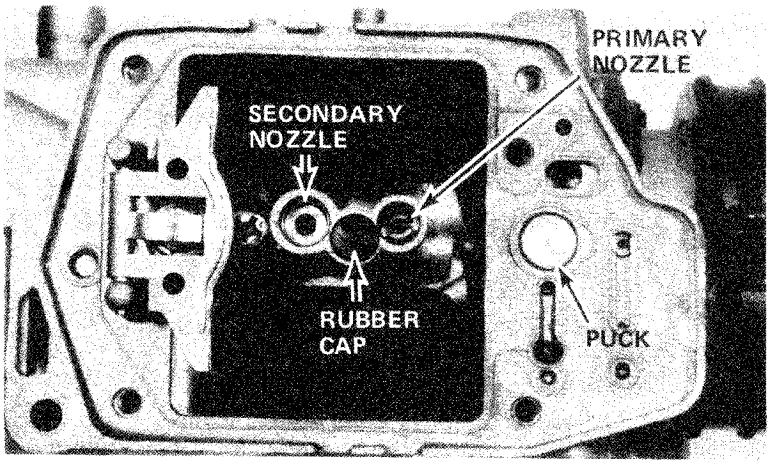

© 1978 American Honda Motor Co., Inc.
Printed in U.S.A. 7-78

Unscrew the slow jet and turn the carburetor right side up. The slow jet, the secondary nozzle and the puck will fall out. To remove the primary nozzle, press it out carefully from the carburetor throat side using a soft wood or plastic tool so that the brass is not damaged.

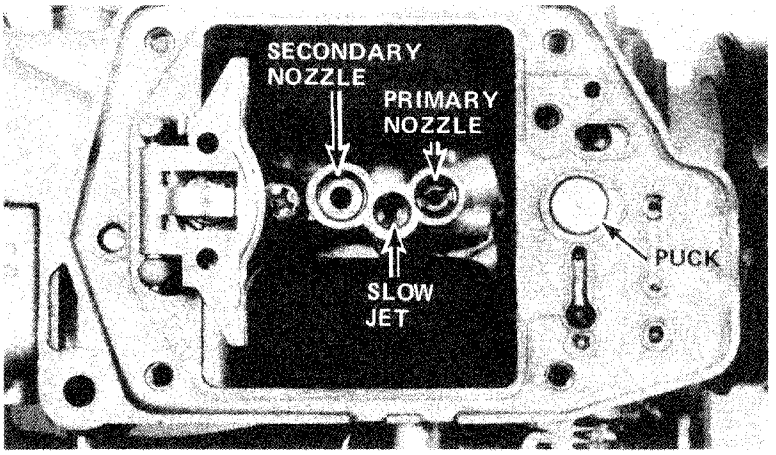

Remove the float pivot pin and lift out the float assembly and needle.

NOTE

The float needle is attached to the float arm with a clip.

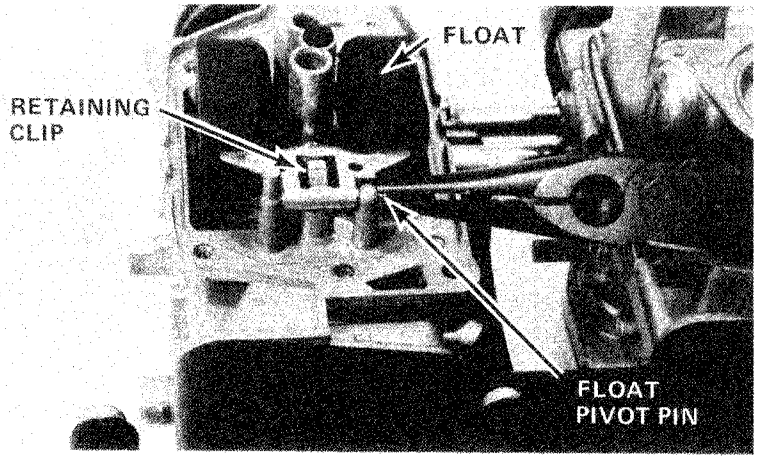

Remove the retaining plate and the float needle seat.

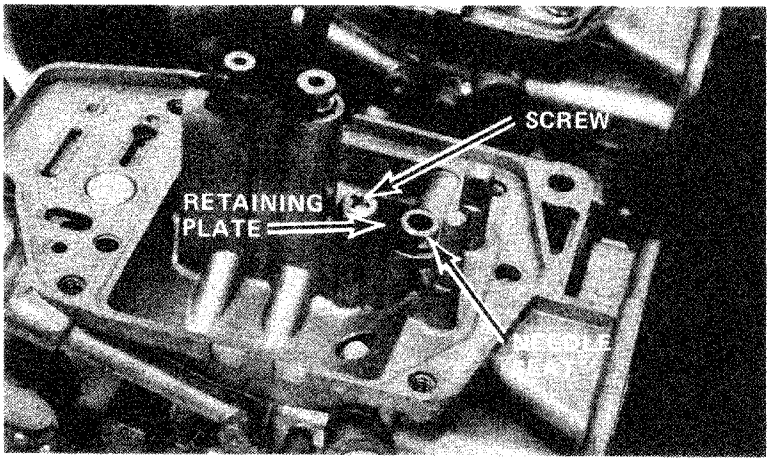

© 1976 American Honda Motor Co., Inc.
Printed in U.S.A. 7-78

Inspect the needle and seat for hardened deposits, grooving, or other damage and replace if necessary.

Inspect the filter screen for holes or hardened deposits.

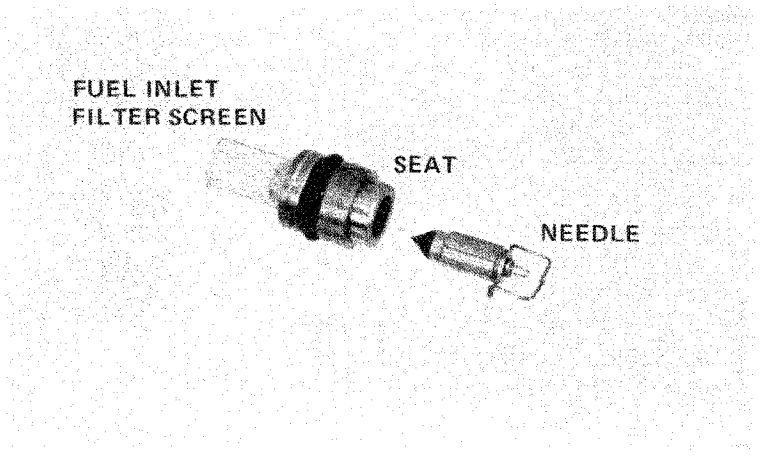

Carburetor System Reassembly

The reassembly sequence is essentially the reverse of the disassembly.

1. Connect pairs of carburetors at the throttle link and at the choke link.
2. Attach stay plate.
3. Install air screen and bolt the carburetors to air chamber half.
4. Assemble the air chamber halves and connect the slow air hoses.
5. Connect the long choke link at number 4 carburetor.
6. Attach the linkage, throttle spring, and linkage center bolt. Install the clips or cotter pins on the linkage at the number 3 and 4 carburetors.

Following reassembly, check that the choke plates are fully closed when the choke is engaged. Adjust the linkage at the rear of the number 3 carburetor if necessary.

7. Install the manifolds on the carburetor assembly.

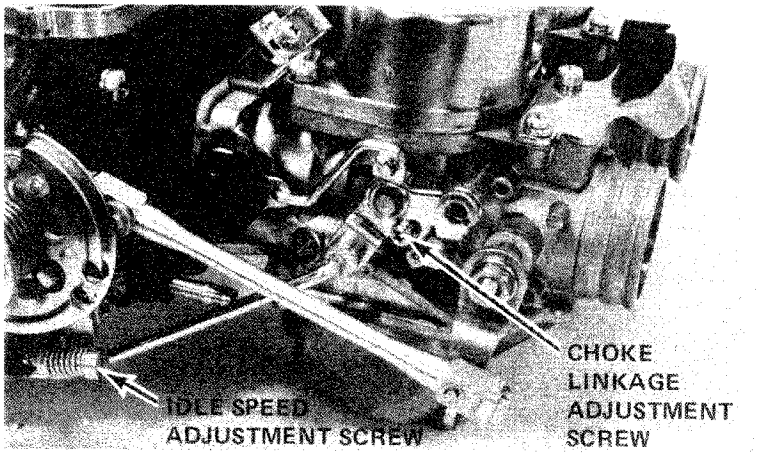

© 1976 American Honda Motor Co., Inc.
Printed in U.S.A. 7-78

Air Cutoff Valve Removal and Disassembly

NOTE

The valve can be serviced without removing the carburetor assembly. Remove the air cleaner for access.

Disconnect the air cutoff valve hose and remove the two screws attaching the valve to the air chamber assembly. Be careful not to lose the O-rings as the valve is lifted off.

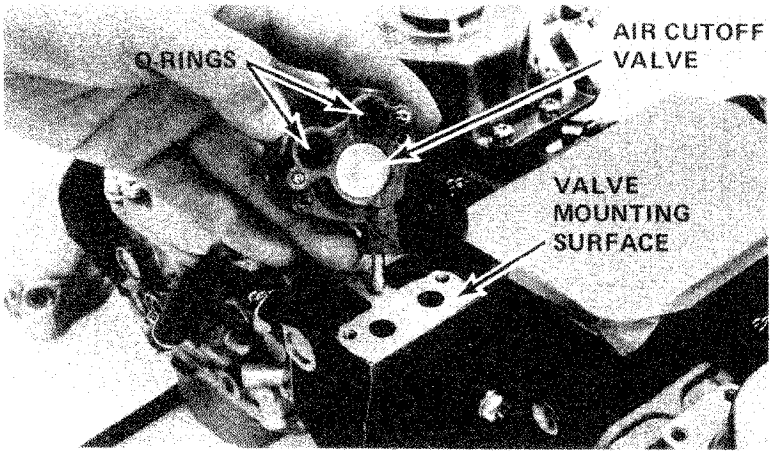

Disassemble the air cutoff valve, being careful not to damage the diaphragm.

Inspect the parts for damage. Make sure that the valve travels freely. Inspect the air hoses and replace as needed.

Check the diaphragm for cracks and brittleness.

Check the air passages for foreign material.

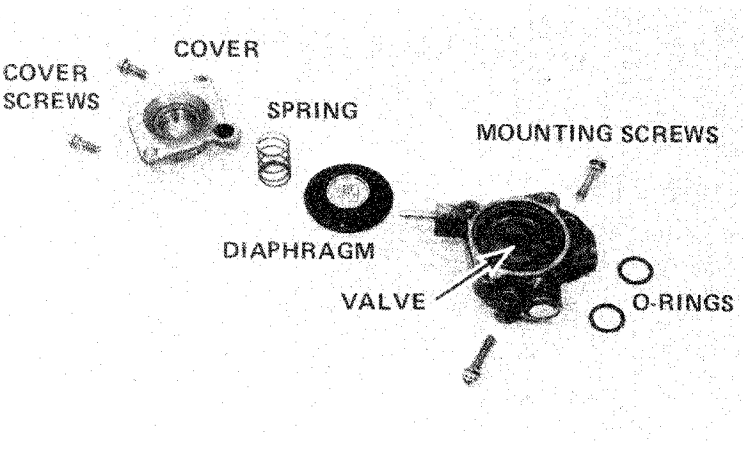

Assembly

Assemble the components as shown. Make sure the O-rings seat in their grooves.

Reinstall the valve on the carburetor assembly.

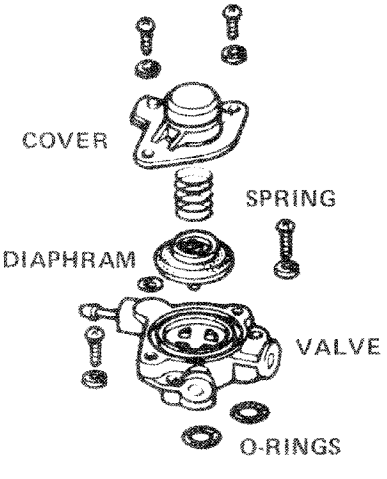

© 1978 American Honda Motor Co., Inc.
Printed in U.S.A. 7-78

FUEL SYSTEM
AIR CUTOFF VALVE

FLOAT LEVEL

Adjust the float level by bending the metal float arm with needlenose pliers.

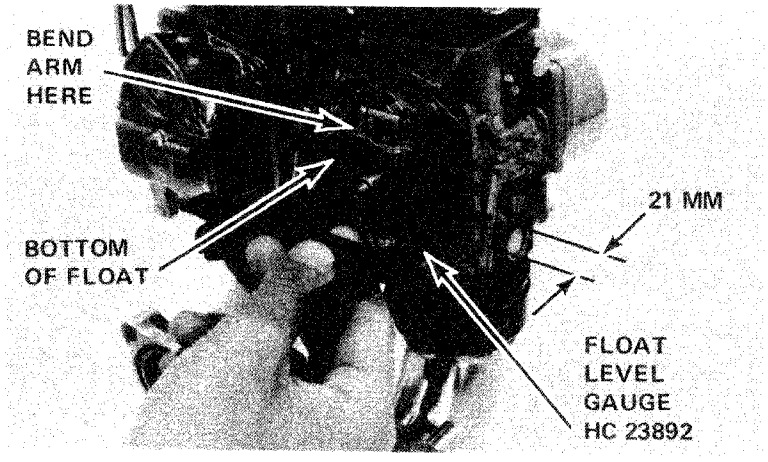

Reassemble the carburetor assembly on the engine.

NOTE

Be sure the manifold o-rings are not crimped or mis-aligned.

Reconnect the fuel lines, throttle linkage, choke cable and air cleaner.

Connect the crankcase breather to the air cleaner.

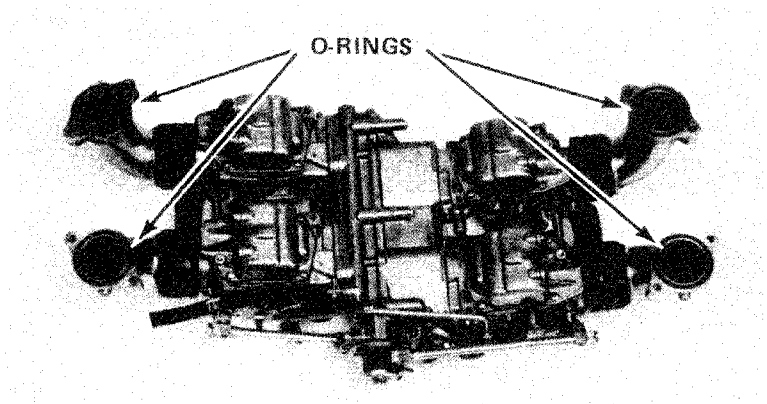

© 1976 American Honda Motor Co., Inc.
Printed in U.S.A. 7 78

NOTE
Adjust idle mixture on GL1000 Emission Controlled models manufactured after Dec. 31, 1977 only after carburetor overhaul has been completed. See page 9-2 for pre-emission controlled model specifications.

The motorcycle should be parked on its center stand, transmission in neutral, and engine at normal operating temperature.

IDLE DROP ADJUSTMENT PROCEDURE

NOTE
The Idle Drop Procedure does not apply to pre-emissions controlled motorcycles. It is applicable for all emission controlled GL1000 motorcycles manufactured after December 31, 1977.

The carburetor pilot screws were factory adjusted during manufacture, and it is not necessary to adjust idle mixture unless the pilot screws have been removed (as during carburetor overhaul).

1. Turn the pilot screws in (clockwise) until they lightly seat, then back them out (counterclockwise) the specified number of turns. This is a preliminary setting prior to the final adjustment procedures 2-7 described below.

PILOT SCREW INITIAL SETTING: 2 TURNS OUT

CAUTION

Damage to the pilot screw 's seat will occur if the pilot screw is tightened against the seat.

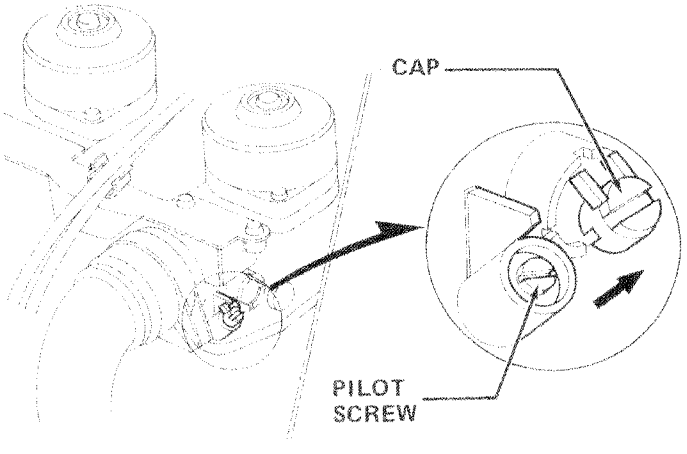

2. Synchronize carburetors (Pg 3-18).

3. Check idle speed with an accurate tachometer having a dial which reads in 100 rpm graduations. Adjust idle speed to 950 rpm.

4. Turn the pilot screw of one carburetor in or out to achieve the highest idle speed obtainable. Repeat this procedure on each of the remaining carburetors in turn. After all four pilot screws have been adjusted to produce the highest idle speed overall, readjust the throttle stop screw to return the idle speed to 950 rpm.

© 1978 American Honda Motor Co., Inc.
Printed in U.S.A. 7-78

IDLE MIXTURE ADJUSTMENT

5. Turn the pilot screw of one carburetor in (clockwise) until the idle speed is lowered by 100 rpm; then back the pilot screw out (counterclockwise) exactly 3/4 of a turn from the minus 100 rpm position.

   After the pilot screw is thusly adjusted, readjust the throttle stop screw, if necessary, to obtain an idle speed of 950 rpm.

   Repeat step 4 for each of the remaining carburetors in turn.

6. Install the pilot screw caps, positioning them so the lug on the carburetor body fits between the lugs on the cap.

7. Readjust engine idle speed to 950 ± 100 rpm.

HIGH ALTITUDE ADJUSTMENT

The carburetor idle speed may have to be readjusted for high altitude operation: above 2,000 M (6,500 ft). The specified idle speed is 950 ± 100 rpm.

© 1978 American Honda Motor Co., Inc.
Printed in U.S.A. 7-78

10
CLUTCH

10

SERVICE INFORMATION 10-2
TROUBLESHOOTING 10-4
FREE-PLAY ADJUSTMENT 10-5
CLUTCH REPAIRS 10-6
ENGINE FLUSHING PROCEDURE 10-9

© 1976 American Honda Motor Co., Inc.
Printed in U.S.A. 7-78

SERVICE INFORMATION

Specifications

Type: Multiple-plate wet clutch

Lubrication: Oil gravity fed through mainshaft, returned by scavenge pump

Free play: 5 to 15 mm (0.2 to 0.6 in) at end of hand lever

Clutch plates and discs: Six steel plates, one damper plate, eight friction discs

Plate Warpage
service limit: 0.3 mm (0.012 in)

Disc thickness: 3.42 to 3.58 mm (0.135 to 0.141 in)
service limit: 3.2 mm (0.126 in)

Springs: Six coil springs

Spring free length: 35.5 mm (1.398 in)
service limit: 34.2 mm (1.346 in)

Spring force @ compressed length: 23.8 kg @ 23 mm (52.4 lb @ 0.903 in)
service limit: 21.8 kg @ 23 mm (48 lb @ 0.905 in)

Torque Values

Clutch center nut: 380 to 420 kg-cm (27 to 30 ft-lb)

6 mm case bolts: 100 to 140 kg-cm (87 to 121 in-lb)

Working Practice

Clutch plate removal and free-play adjustment are the only clutch operations which can be performed with the engine in the frame.

Repair or replacement of other components requires that the engine be removed and placed on an engine stand. Refer to Section 4.

© 1976 American Honda Motor Co., Inc.
Printed in U.S.A. 7-78

CLUTCH
SERVICE INFORMATION

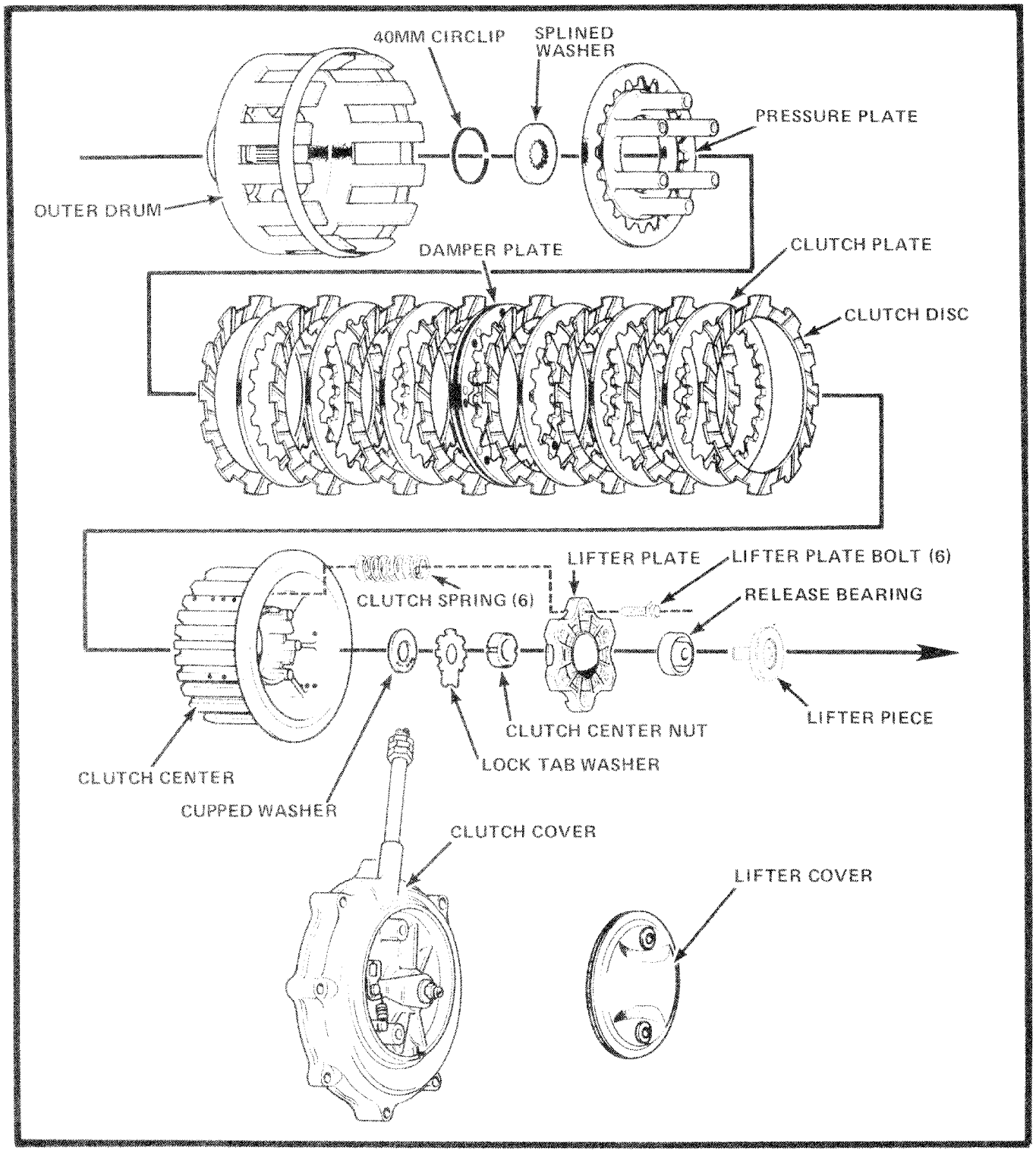

© 1978 American Honda Motor Co., Inc.
Printed in U.S.A. 7-78

Tools and Materials

For free-play adjustment:
- 10mm Socket
- 12mm Open-end wrench
- Screwdriver

For engine removal:
- Refer to Section 4.

For clutch repair:
- 10mm Socket
- Clutch holder HC 41304
- Clutch wrench HC 41303
- Circlip pliers
- Clutch puller HC 41308
- Vernier caliper
- 0.3mm Feeler gauge
- Clutch driver HC 47883
- 0-300 in-lb Torque wrench
- 0-150 ft-lb Torque wrench

TROUBLESHOOTING

Faulty clutch operation can usually be corrected by adjusting the free-play.

Clutch Slips When Accelerating
1. No free play.
2. Discs worn.
3. Springs weak.

Clutch Will Not Disengage
1. Too much free play.
2. Plates warped.

Motorcycle Creeps With Clutch Disengaged
1. Too much free play.
2. Plates warped.

Excessive Lever Pressure
1. Clutch cable kinked, damaged or dirty.
2. Lifter mechanism damaged.

Clutch Operation Feels Rough
1. Outer drum slots rough.

© 1978 American Honda Motor Co., Inc.
Printed in U.S.A. 7-78

FREE-PLAY ADJUSTMENT

Free play should be 5 to 15 mm measured at the outer end of the clutch lever.

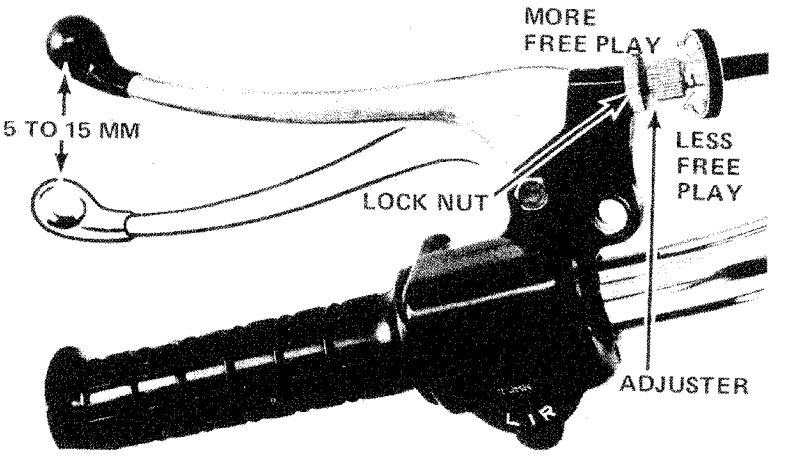

Turn the upper adjuster all the way in to provide maximum free play at the lever before adjusting the lower adjuster.

Loosen the lower cable lock nut and run the adjuster in to create maximum cable free play at the lifter.

Remove the lifter cover, loosen the lock nut and turn the adjuster screw in (clockwise) until resistance is felt. Then back it out (counterclockwise) three-quarters of a turn. Tighten the lock nut.

Turn the lower adjuster out until the required amount of lever free play is attained. Tighten the lower adjuster lock nut and reinstall the cover.

The free-play adjuster at the clutch lever should be used by the rider when minor adjustments are needed.

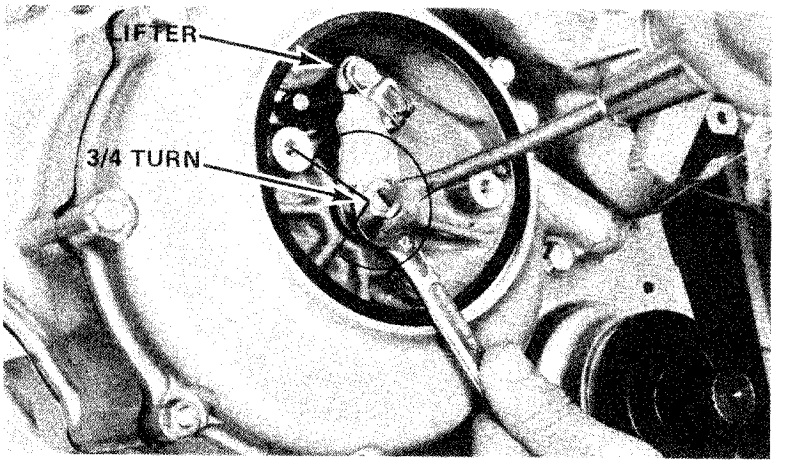

© 1976 American Honda Motor Co., Inc.
Printed in U.S.A. 7-78

CLUTCH REPAIRS

NOTE
The clutch cover, plates, springs, and discs can be removed with the engine in the frame. To remove the outer drum or the oil scavenge pump, the engine must be removed.

Cover and Lifter Removal

Remove the muffler for clutch disassembly.

Remove the lifter cover and disconnect the clutch cable from the clutch lifter.

Remove the clutch cover. Leave the lifter in place.

Lifter Inspection

Inspect the clutch lifter for damage. Check the release bearing for condition and freedom of operation.

Lifter Plate Removal

Remove lifter plate bolts in small increments, alternating bolts in a criss-cross pattern to avoid breaking the plate.

Remove the lifter plate and 6 clutch springs.

Center Nut Removal

Straighten the lock tab holding the nut.

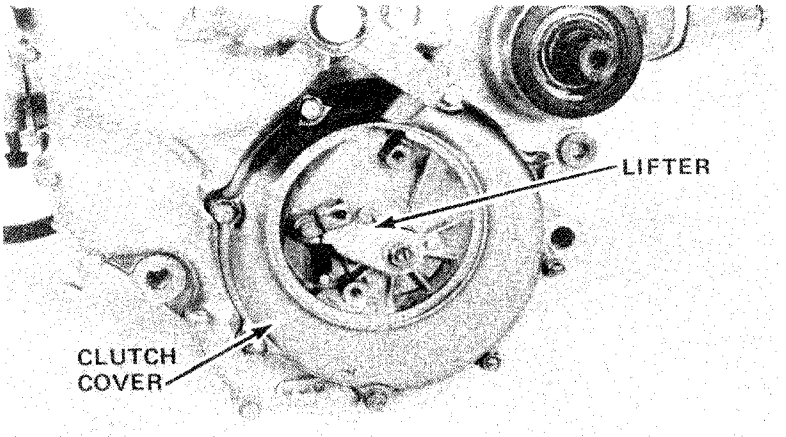

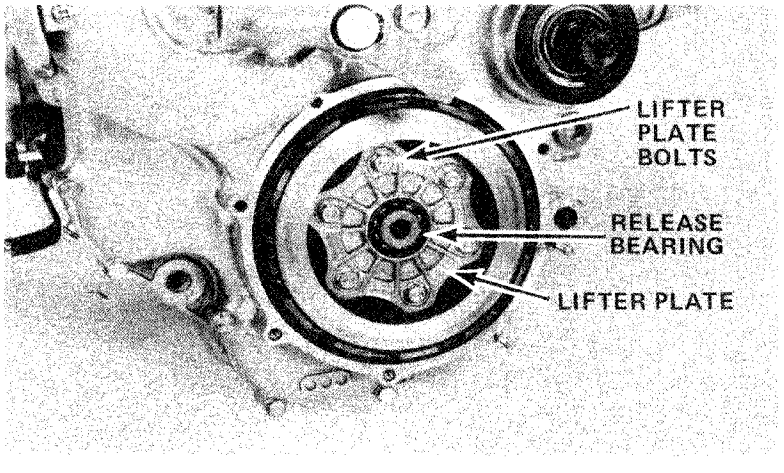

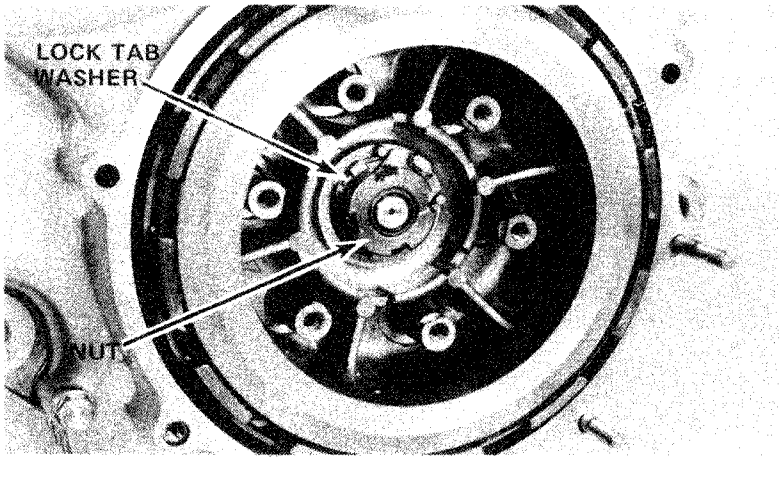

© 1976 American Honda Motor Co., Inc.
Printed in U.S.A. 7-78

CLUTCH REPAIRS

Remove the clutch nut using the special tools as shown. Remove the lock tab and the cupped washer.

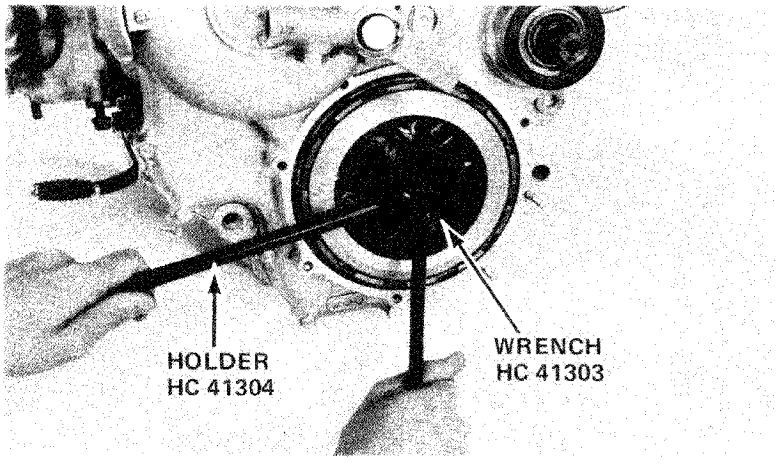

Center, Plate, Disc Removal

Remove the clutch center.
Inspect for cracks or excessive wear on the splines.

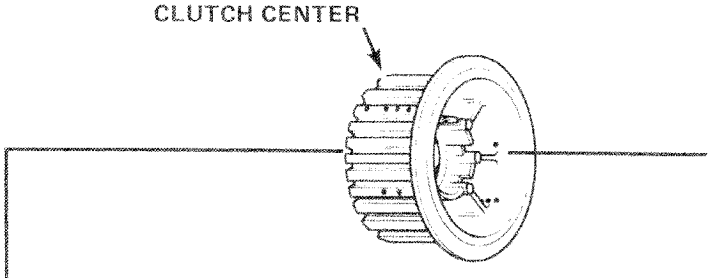

Remove the clutch plates, discs, and the pressure plate.

NOTE
The outer drum cannot be removed with the engine in the frame.

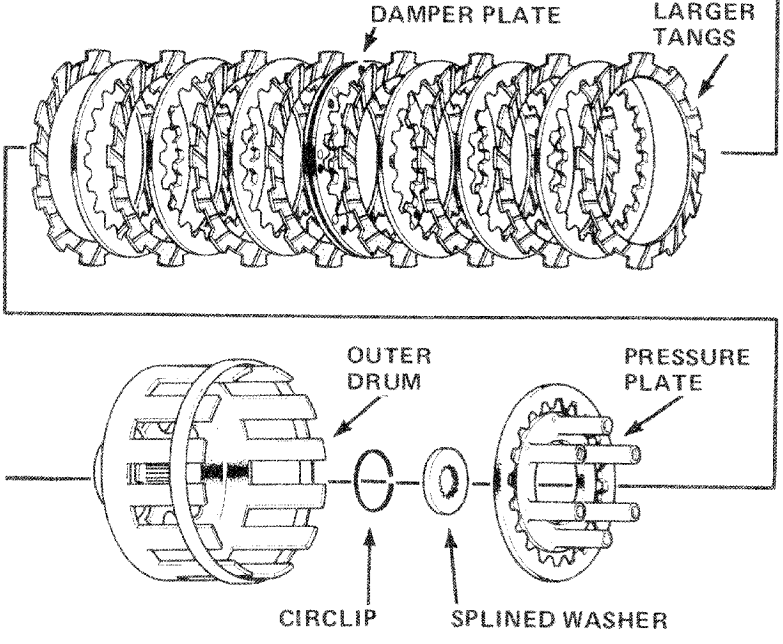

© 1976 American Honda Motor Co., Inc.
Printed in U.S.A. 7-78

Spring Inspection

Check spring free length.

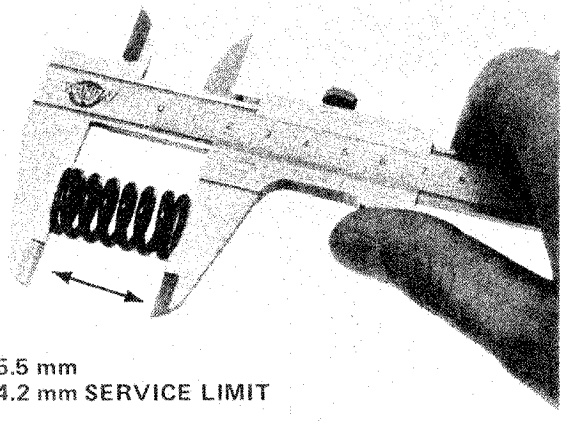

Plate and Disc Inspection

Replace the clutch plates and discs if they show signs of scoring or discoloration.

Measure disc thickness.

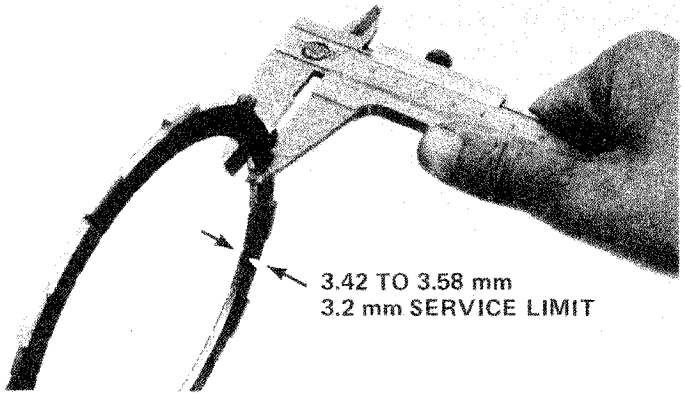

Check for plate warpage on a surface plate, using a feeler gauge.

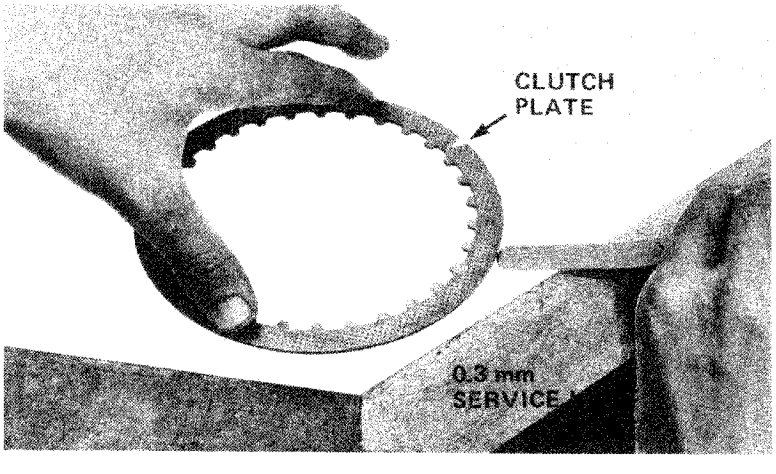

GL-1000 SHOP MANUAL
© 1976 American Honda Motor Co., Inc.
Printed in U.S.A. 7-78

ENGINE FLUSHING PROCEDURE

Outer Drum Inspection

Check the slots in the outer drum for nicks, cuts, or indentations made by the friction discs. If the surfaces are not smooth, replace the outer drum.

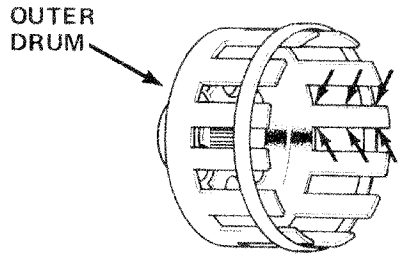

ENGINE FLUSHING PROCEDURE

CAUTION

If any of the clutch friction discs have disintegrated the engine must be cleaned and flushed of any debris by the following procedure. This procedure only applies when the engine is still in the frame.

1. Clean the clutch outer drum with a lint free solvent soaked rag.
2. Drain the oil.
3. Remove the right head pipe.
4. Loosen the bottom engine mounting bolt next to the oil screen cover.
5. Remove the four oil screen cover securing screws.
6. Use an offset screwdriver or a chisel to remove the front oil screen cover securing screw.

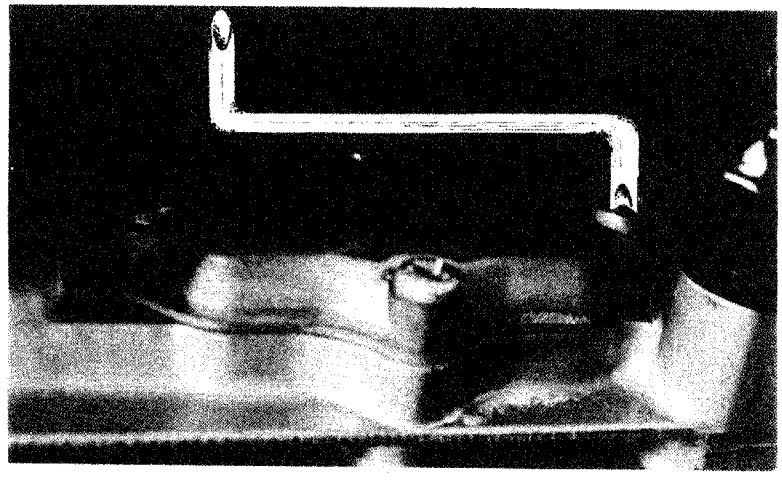

© 1976 American Honda Motor Co., Inc.
Printed in U.S.A. 7-78

7. Flex the frame next to the lower mounting bolt (approximately 2 mm) to facilitate removal of the front oil screen cover securing screw.
8. Remove the oil screen cover.
9. Remove the oil screen.
10. Slowly pour approximately 1 quart of clean oil into the crankcase oil filler to flush any clutch particles toward the oil screen.
11. Reach into the oil screen cavity and scoop out any loose particles as the oil is being poured into the engine.
12. Reassemble and adjust the clutch.
13. Install and tighten the drain plug.
14. Clean and install the oil screen.
15. Install the oil screen cover.
16. Replace the front oil screen cover screw with a hex head bolt approximately 3 mm shorter than the original securing screw to facilitate future removal and installation of the oil screen cover.
17. Retorque the lower engine mounting bolt to 550 to 650 kg-cm (40-47 ft-lb).
18. Install the muffler and head pipe.
19. Fill the crankcase with new engine oil.
20. Run the engine for approximately 5 minutes.
21. Remove and replace the oil filter.
22. Repeat steps 2, 3, 5, 8, 9, 13, 14, 15, 18 and 19.

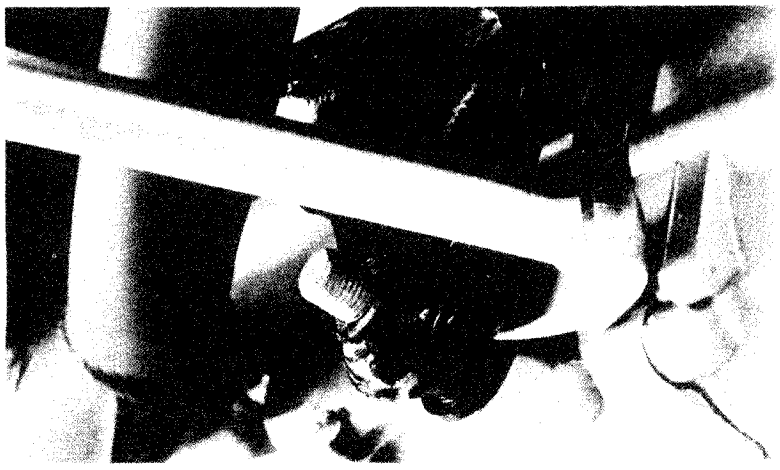

Outer Drum, Chain, and Sprocket Removal

NOTE
Removal of these parts requires that the engine be removed from the frame as described in Section 4.

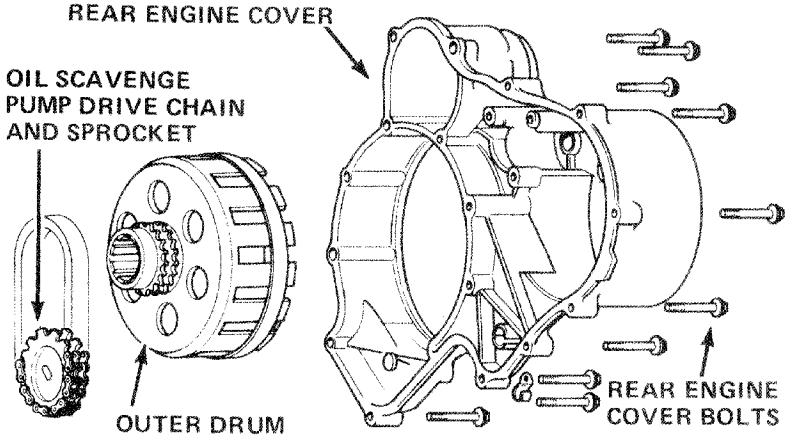

© 1976 American Honda Motor Co., Inc.
Printed in U.S.A. 7-78

Remove the breather chamber.
Remove the rear engine cover.

NOTE
On the back of the outer drum is the chain-drive for the oil scavenge pump. The chain and sprocket are removed with the outer drum.

Remove the splined washer. Remove the 40 mm circlip located on the mainshaft in the center of the clutch outer. Remove the scavenge pump sprocket securing bolt.

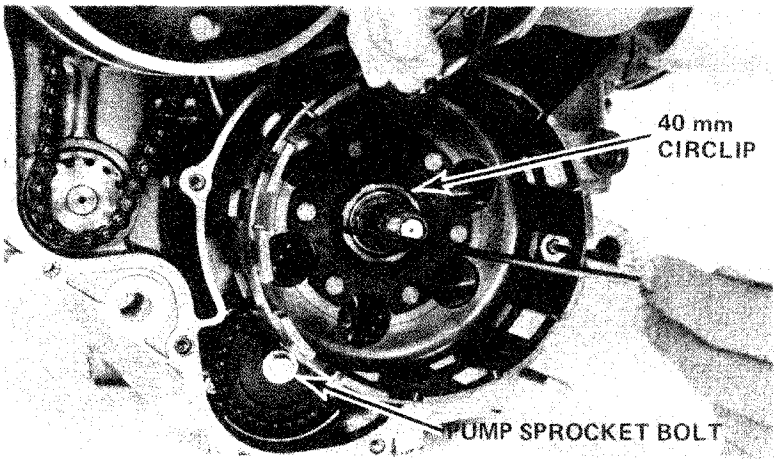

Use special puller to remove the clutch outer drum, chain and sprocket together. Examine the chain and sprockets for wear. Replace if excessively worn.

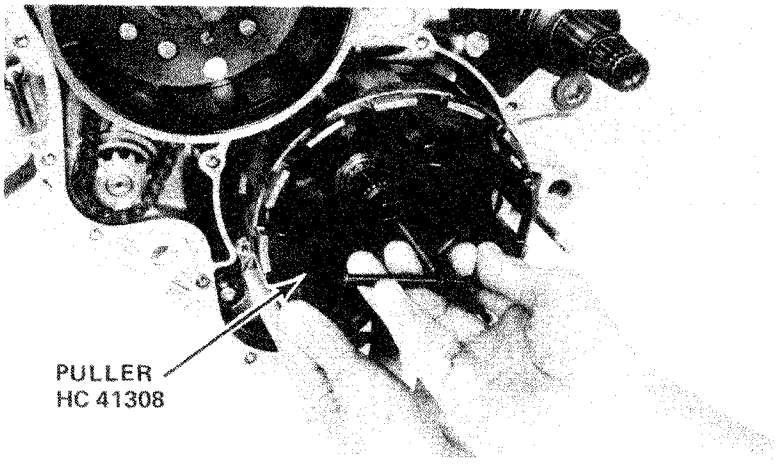

Outer Drum Installation

Install the following:

Outer drum, chain, and sprocket
Sprocket bolt
Circlip
Splined washer
New gasket
Rear engine cover
Breather chamber

Torque the cover bolts to
100 to 140 kg-cm (87-121 in-lbs)

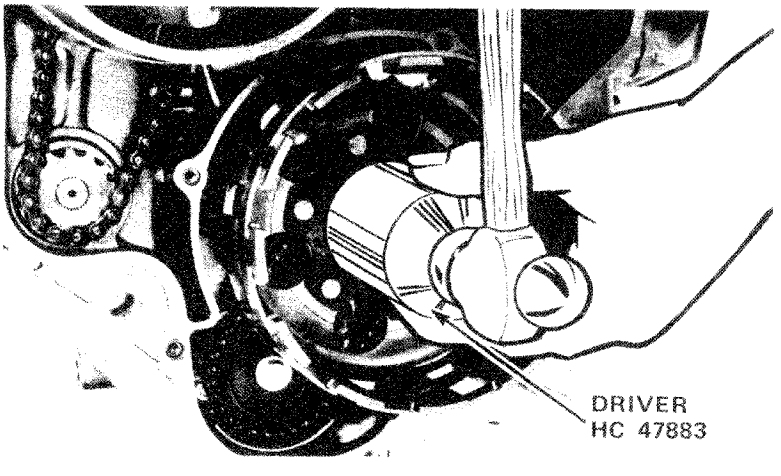

© 1978 American Honda Motor Co., Inc.
Printed in U.S.A. 7-78

Plate and Disc Installation

Install the following:

- Pressure plate
- Plates and discs
- Clutch center
- Special cupped washer
- Lock tab washer
- Special nut

CAUTION

The friction discs must be installed with the oil grooves radiating in a clockwise direction as illustrated.

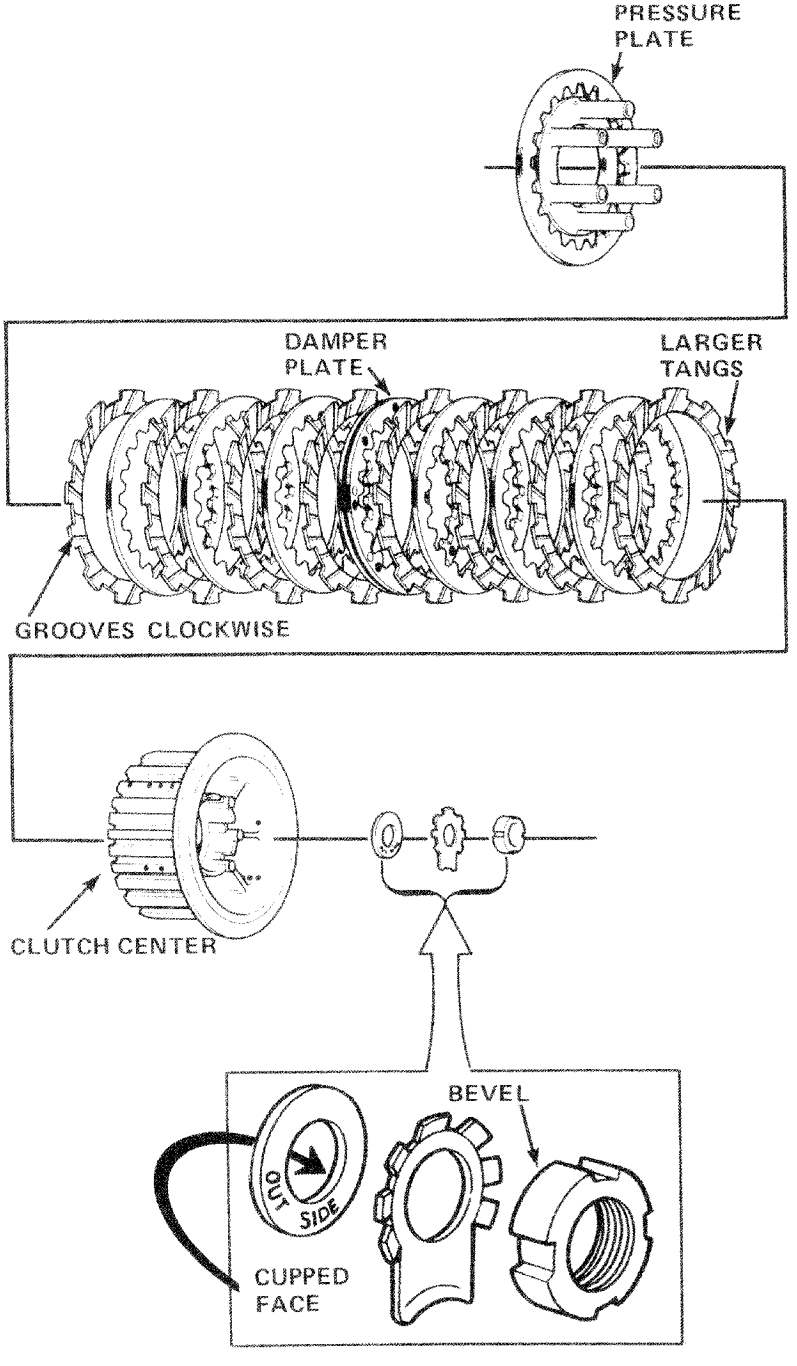

GL-1000 SHOP MANUAL
© 1976 American Honda Motor Co., Inc.
Printed in U.S.A. 7-78

CLUTCH REPAIRS

Torque the clutch center nut using the special clutch holder HC 41304 and socket wrench HC 41303 and bend up a lock tab.

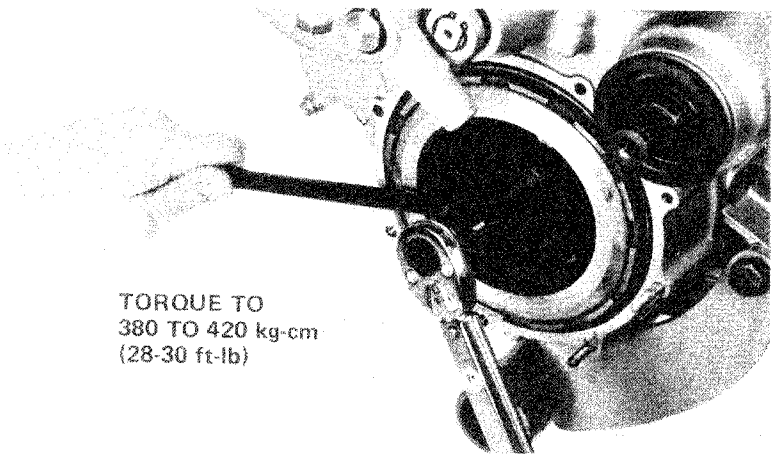

Install the following:
- Six clutch springs
- Lifter plate
- Lifter plate bolts

Install lifter plate bolts in small increments, alternating bolts in a criss-cross pattern to avoid breaking the plate.
- Clutch cover
- Clutch cover bolts
- Clutch cable

Adjust the lifter as described previously in Free-Play Adjustment.

If the engine has been removed, install the engine as described in Section 4.

Adjust free play by means of the lower end cable adjusters.

Install the lifter cover.

Check the engine oil level.

Start the engine and check operation of the clutch.

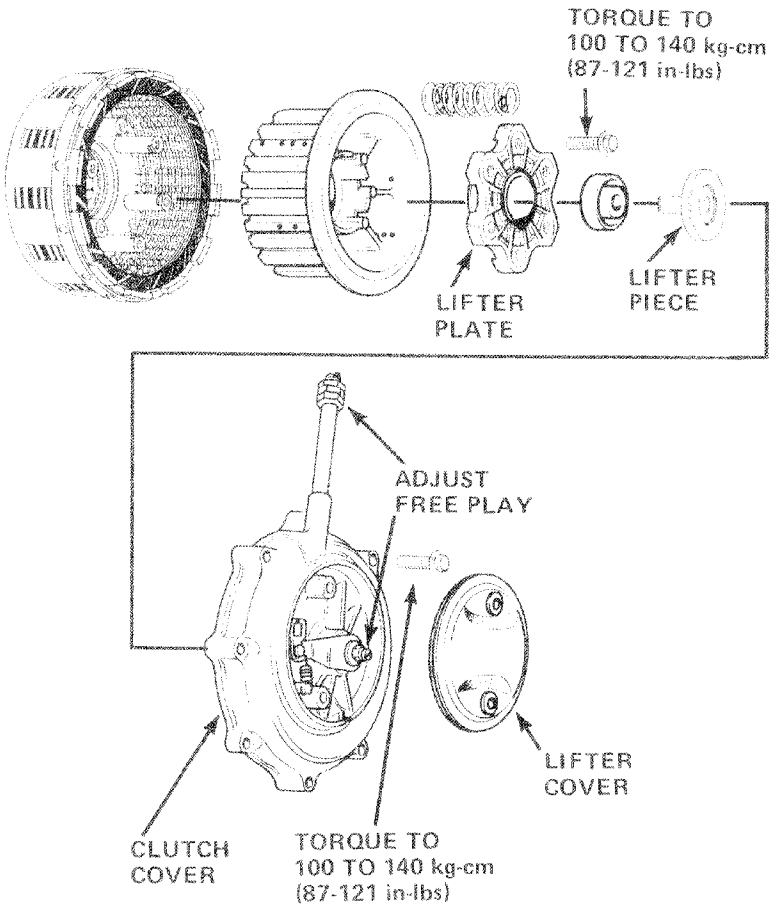

© 1976 American Honda Motor Co., Inc.
Printed in U.S.A. 7-78

11 TRANSMISSION

11

SERVICE INFORMATION 11-2
TROUBLESHOOTING 11-4
GEAR SHIFT MECHANISM 11-5
CRANKCASE DISASSEMBLY 11-7
SHIFT SHAFT 11-8
TRANSMISSION DISASSEMBLY 11-9
OUTPUT SHAFT 11-14
TRANSMISSION REASSEMBLY 11-15
CRANKCASE REASSEMBLY 11-18
CASE SCREW AND BOLT SIZES 11-20

© 1976 American Honda Motor Co., Inc.
Printed in U.S.A. 7-78

SERVICE INFORMATION

Specifications

Clearance:
- Transmission shaft to M4, C2, and C3 gears: 0.040-0.082 mm (0.0016-0.0032 in)
- C1, M4 gears to thrust bushings: 0.040-0.082 mm (0.0016-0.0032 in)
  - Service Limit: 0.182 mm (0.0071 in)

Shift Fork ID: 13.0 to 13.018 mm (0.5118 to 0.5125 in)
- Service Limit: 13.04 mm (0.5133 in)

Shift Fork Shaft OD: 12.966 to 12.984 mm (0.5104 to 0.5112 in)
- Service Limit: 12.90 mm (0.5078 in)

Shift Fork End-Thickness: 6.4 to 6.5 mm (0.25 to 0.26 in)
- Service Limit: 6.1 mm (0.2401 in)

Shift Drum Major Diameter (OD): 35.959 to 35.980 mm (1.4157 to 1.4165 in)
- Service Limit: 35.92 mm (1.414 in)

Shift Drum Minor Diameter (OD): 11.966 to 11.984 mm (0.4711 to 0.4718 in)
- Service Limit: 11.95 mm (0.470 in)

Shift Drum Groove Width: 7.05 to 7.15 mm (0.278 to 0.282 in)

Backlash:
- 1st Gear: 0.044 to 0.121 mm (0.0017 to 0.0048 in)
  - Service Limit: 0.2 mm (0.0078 in)
- 2nd Gear: 0.044 to 0.088 mm (0.0017 to 0.0055 in)
  - Service Limit: 0.17 mm (0.007 in)
- 3rd, 4th, and 5th Gear: 0.046 to 0.094 mm (0.0018 to 0.0037 in)
  - Service Limit: 0.17 mm (0.007 in)

Torque Damper Spring:
- Free Length: 110.9 mm (4.37 in)
  - Service Limit: 100 mm (3.90 in)
- Installed Length: 84.5 mm (3.33 in)

Torque Values:

Crankcase:	10 mm 330 to 370 kg-cm	(24 to 27 ft-lb)
	8 mm 250 to 290 kg-cm	(18 to 21 ft-lb)
	6 mm 100 to 140 kg-cm	(7 to 10 ft-lb)

© 1976 American Honda Motor Co., Inc.
Printed in U.S.A. 7-78

TRANSMISSION SERVICE INFORMATION

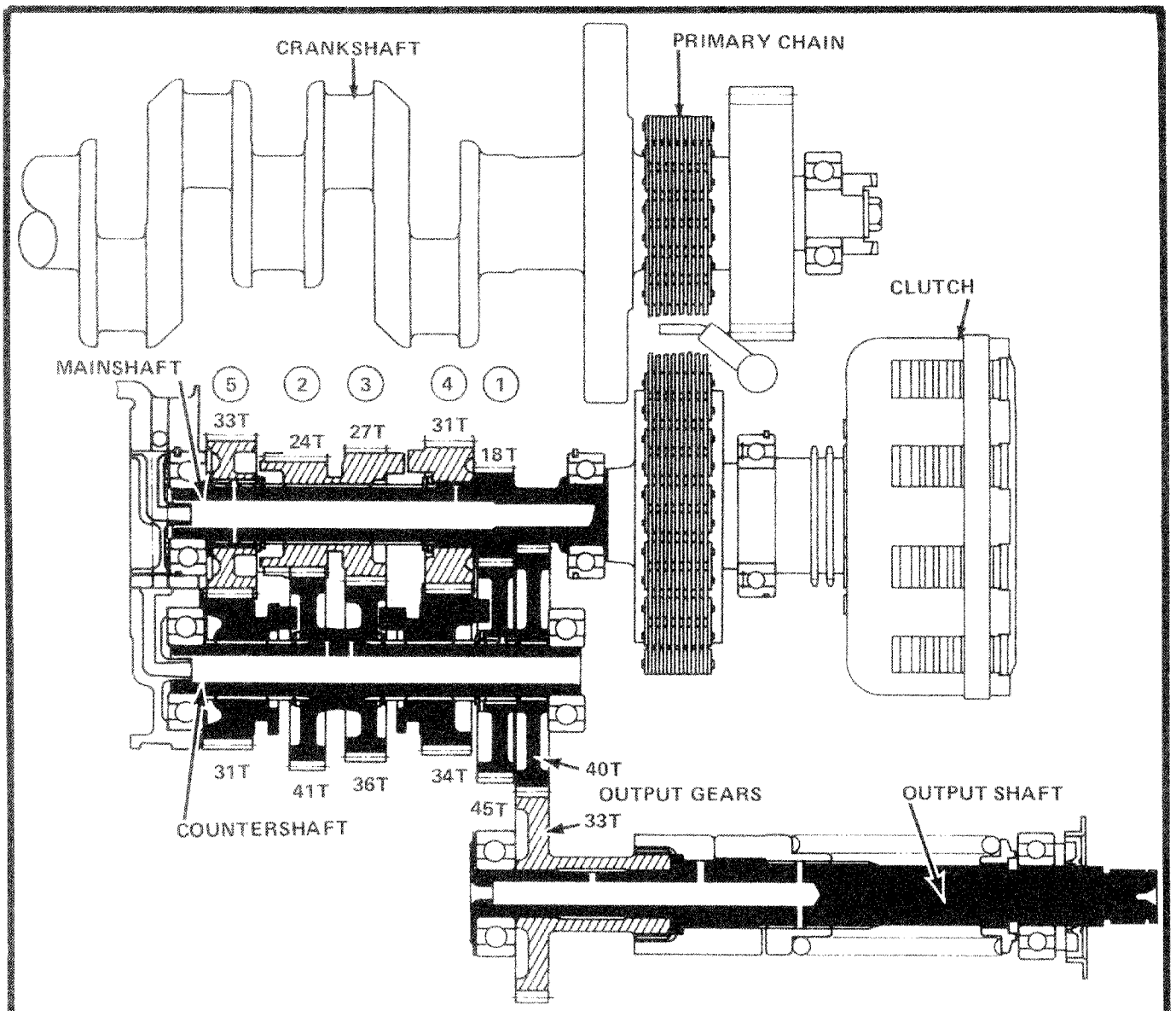

POWER FLOW	RATIO	TEETH	OVERALL RATIO
PRIMARY DRIVE	1.708	24 CRANKSHAFT–41 MAINSHAFT	–
1	2.500	18 MAINSHAFT–45 COUNTERSHAFT	11.977
2	1.708	24 MAINSHAFT–41 COUNTERSHAFT	8.183
3	1.333	27 MAINSHAFT–36 COUNTERSHAFT	6.388
4	1.097	31 MAINSHAFT–34 COUNTERSHAFT	5.256
5	0.939	33 MAINSHAFT–31 COUNTERSHAFT	4.500
OUTPUT	0.825	40 COUNTERSHAFT–33 OUTPUT SHAFT	–

© 1976 American Honda Motor Co., Inc.
Printed in U.S.A. 7-78

Working Practice

The gear shift mechanism stoppers in the lower front cover can be serviced with the engine in the frame. For internal transmission repairs, the engine cases must be separated. Engine removal and installation are described in Section 4.

Tools and Materials

Torque wrench 0-350 kg-cm (0-300 in-lb)
Torque wrench 0-150 kg-m (0-150 in-lb)
Micrometer 0-25 mm HC 11885
Vernier caliper
Micrometer 25-50 mm HC 11886

TROUBLE-SHOOTING

Hard to Shift Into Gear

1. Improper clutch adjustment: too much free play
2. Shift forks bent
3. Shift shaft bent
4. Shift claw bent
5. Shift spindle bolt loose
6. Shift drum stopper bent
7. Shift drum cam grooves damaged

Transmission Jumps Out of Gear

1. Gear dogs worn
2. Shift shaft bent
3. Shift drum stopper broken
4. Shift forks bent

© 1978 American Honda Motor Co., Inc.
Printed in U.S.A. 7-78

GEAR SHIFT MECHANISM

Drain the coolant and remove the radiator.

Drain the oil, remove the oil filter, and the front engine cover.

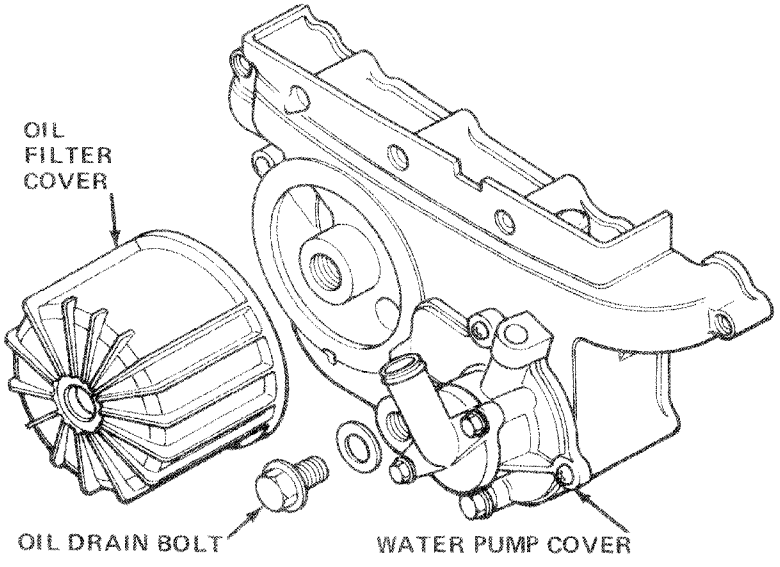

NOTE

Observe the locations of the case O-rings. For knock pin and collar location see Page 11-7.

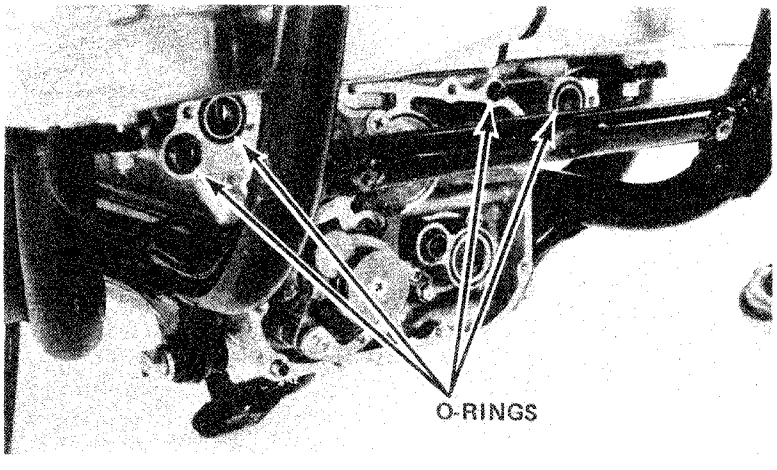

© 1976 American Honda Motor Co., Inc.
Printed in U.S.A. 7-78

Remove the neutral stopper and the shift drum stopper.

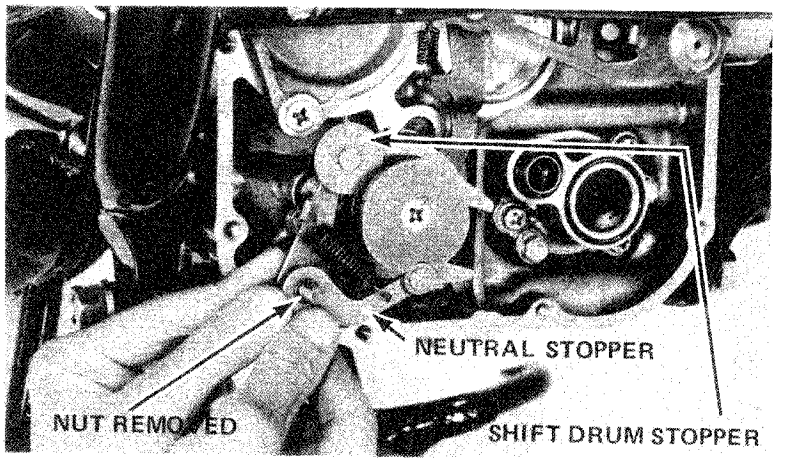

Remove the positive stopper.

Inspect all components for wear and damage.

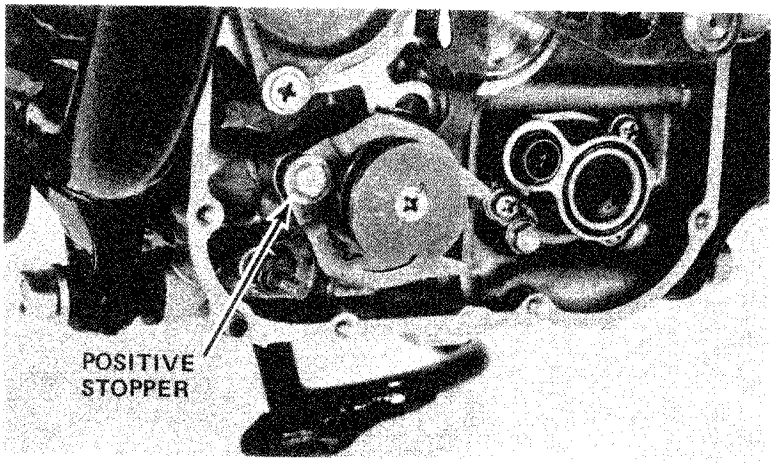

NOTE

For more extensive (internal) transmission repair, the engine must be removed and the engine cases separated.

Remove the engine as described in Section 4.

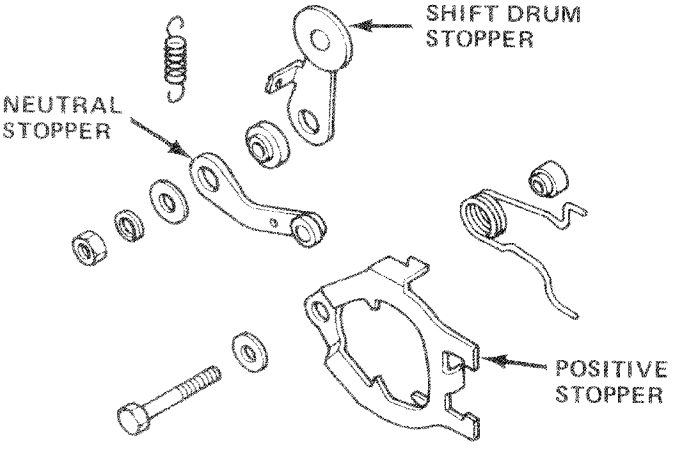

© 1976 American Honda Motor Co., Inc.
Printed in U.S.A. 7-78

ENGINE CASE REMOVAL

Remove the engine rear cover and clutch cover.

Remove the scavenge pump bolt and sprocket.

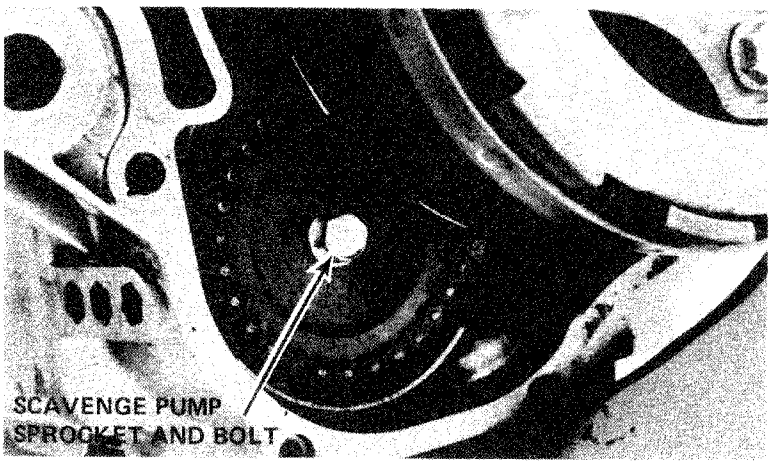

Remove the front engine cover.

NOTE

Observe the location of case O-rings, collars and knock pins.

Remove the left cylinder head and starter. See Section 5.

NOTE

It is not necessary to remove the right cylinder head unless the right-hand pistons are to be removed also.

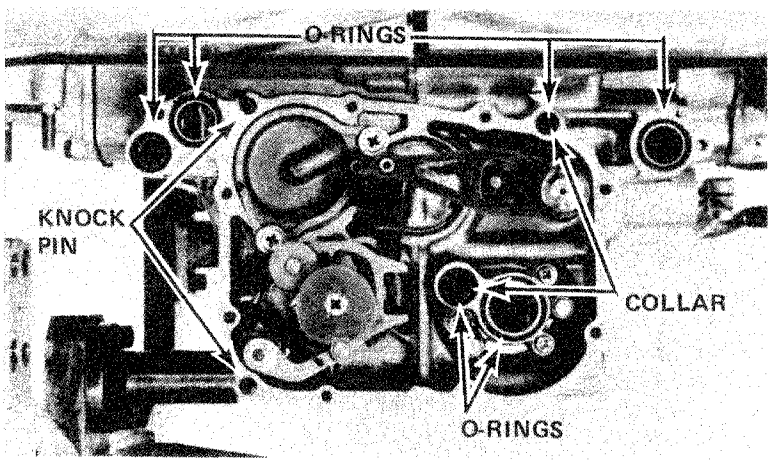

Remove the 19 left case bolts.

NOTE

There are engine case bolts behind the starter and in the cylinder head oil return chamber on the left side only.

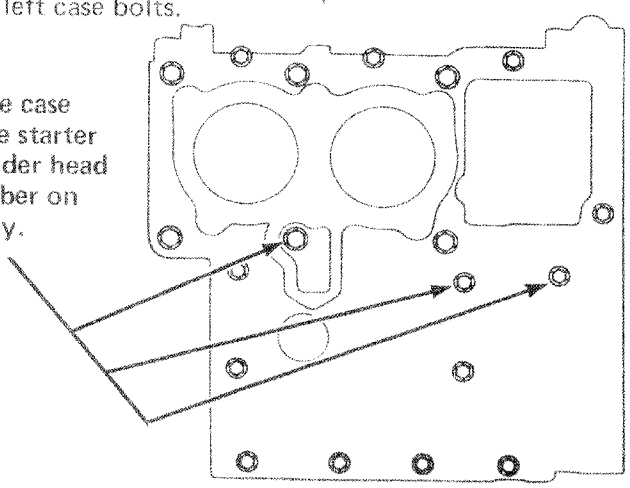

Remove the three right case bolts.

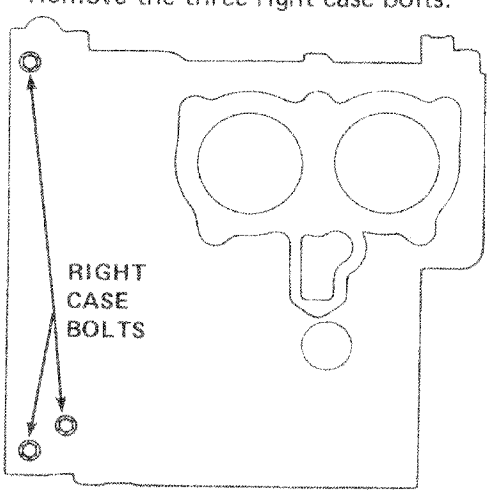

© 1976 American Honda Motor Co., Inc.
Printed in U.S.A. 7-78

Rotate the stand placing the left case up.

Remove the shift arm from the gear shift drum.

Slide the case partially up and install the case supports.

Remove the left case.

CAUTION

To prevent damage, place shop towels under the pistons to prevent them from falling onto the transmission when the left case is removed.

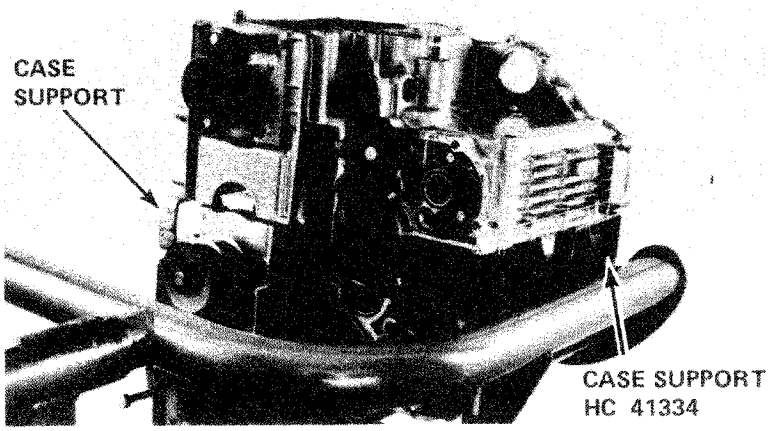

SHIFT SHAFT

Remove the shift shaft.

Inspect the shift shaft, shift arm, and spindle for wear or damage. If there is excessive shift lever movement before the shaft starts to rotate, replace the shift arm or spindle.

Reinstall the shift shaft.

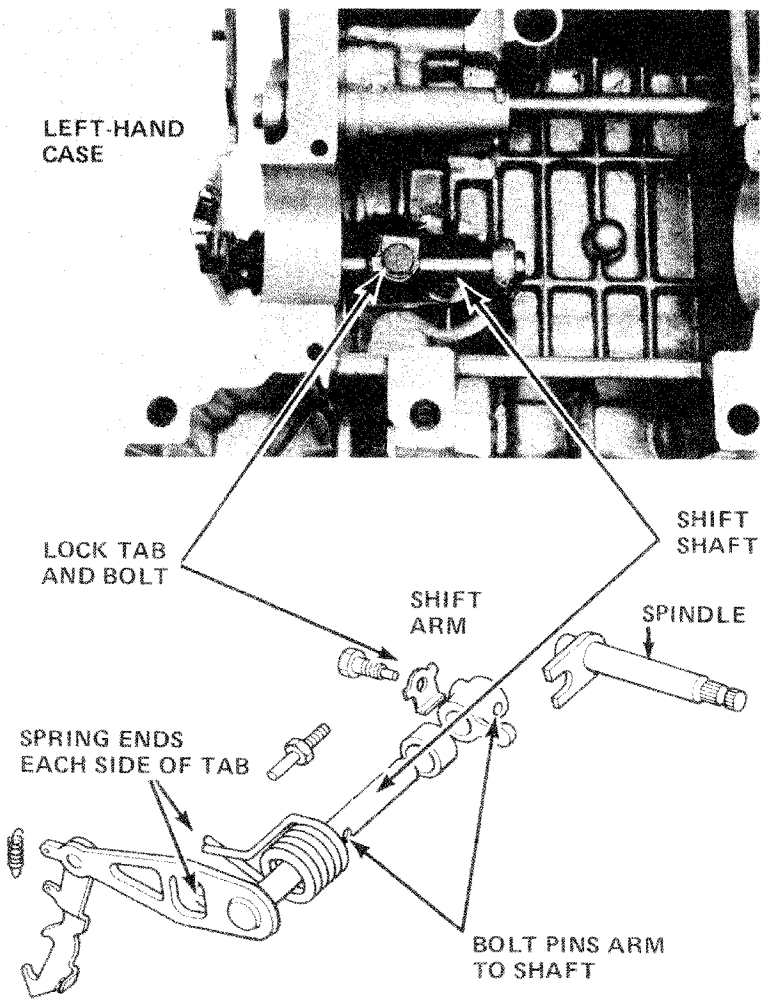

© 1976 American Honda Motor Co., Inc.
Printed in U.S.A. 7-78

TRANSMISSION DISASSEMBLY

Remove the guide pin.

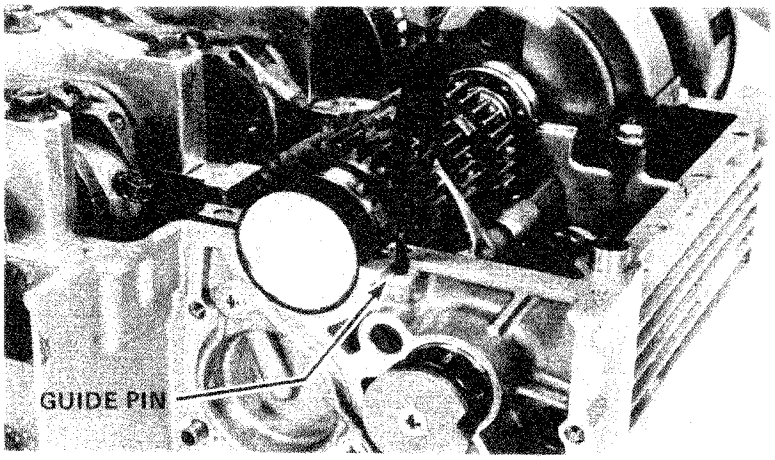

Slide the fork shaft out of the case.

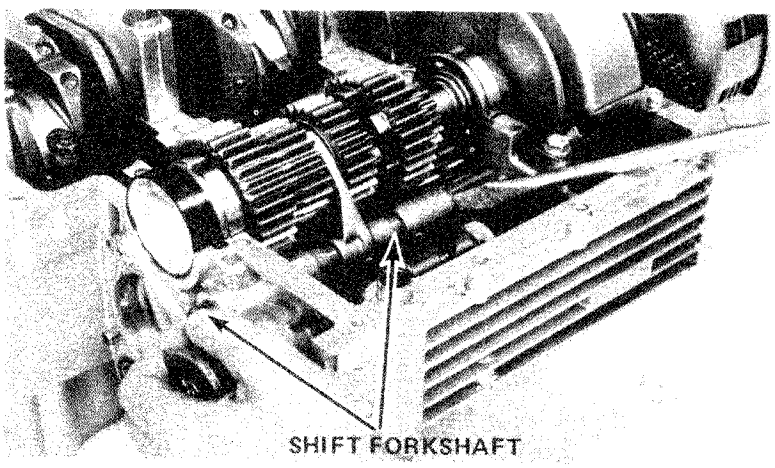

Remove the mainshaft end cap. Note the alignment of the oil holes in the case and cap.

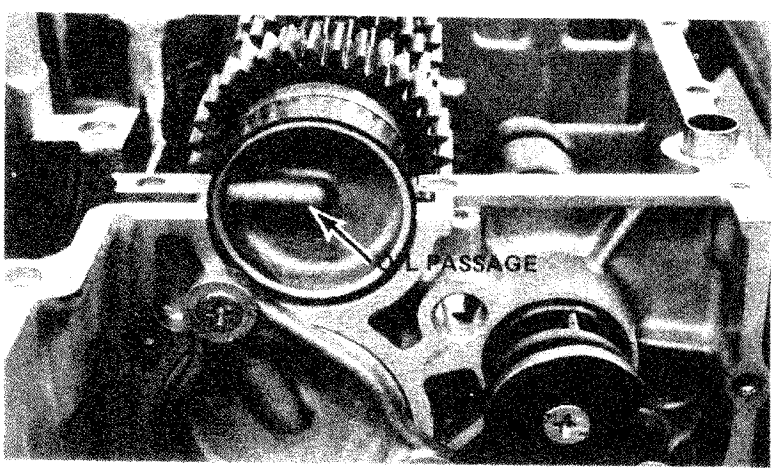

© 1976 American Honda Motor Co., Inc.
Printed in U.S.A. 7-78

Shift Drum and Fork Inspection

Remove the neutral switch.

Loosen the oil separator bolts and raise the mainshaft.

Remove the shift drum and the shift forks.

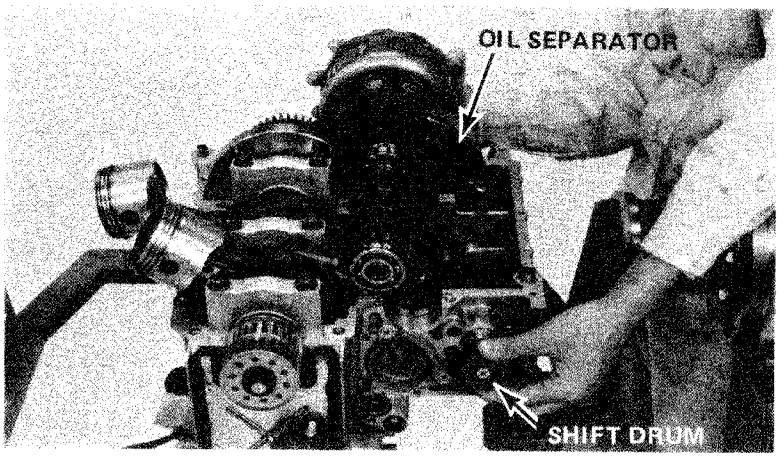

Check the forks for burned ends or other evidence of abnormal contact. If damaged, inspect the gears.

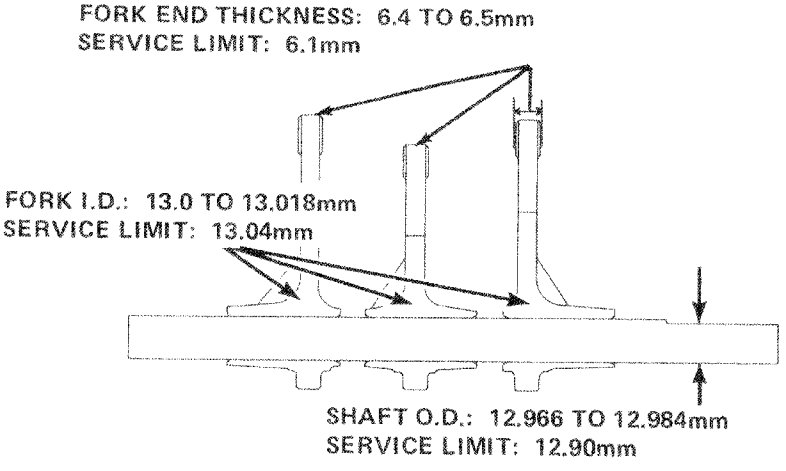

Inspect the drum grooves. They should be smooth and free of chips or burrs.

Check dimensions.

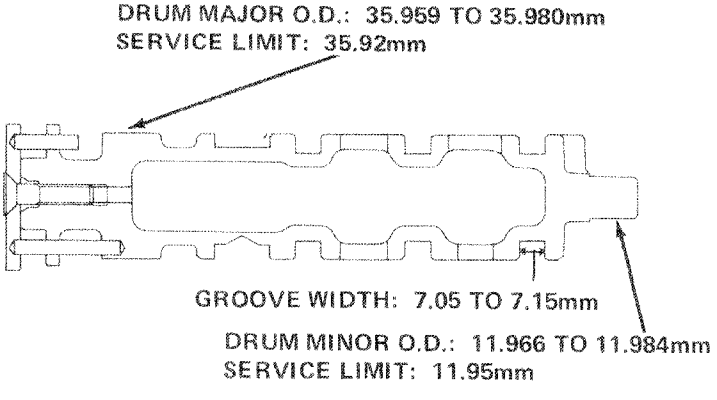

© 1976 American Honda Motor Co., Inc.
Printed in U.S.A. 7-78

TRANSMISSION DISASSEMBLY

Mainshaft Removal

Remove the primary chain spray oiler and the oil separator.

Lift the transmission mainshaft and the primary driven gear and remove it through the primary chain.

For clutch disassembly see Section 10.

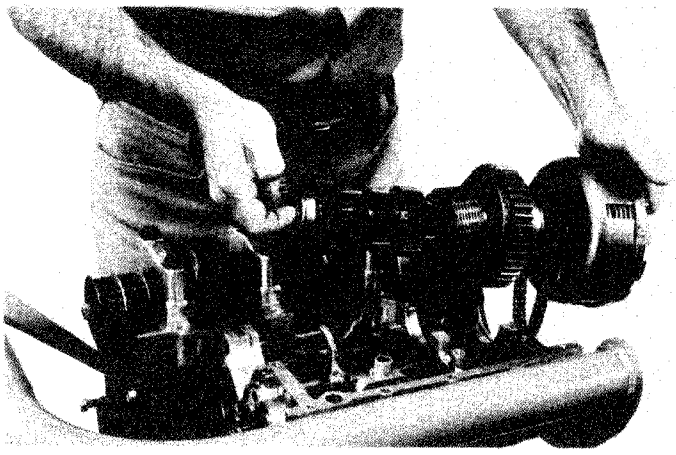

Disassemble the mainshaft.

Check the gears for freedom of movement or rotation on the shaft. Examine the gear dogs for evidence of abnormal wear. Note the alignment of the bushing and shaft oil holes.

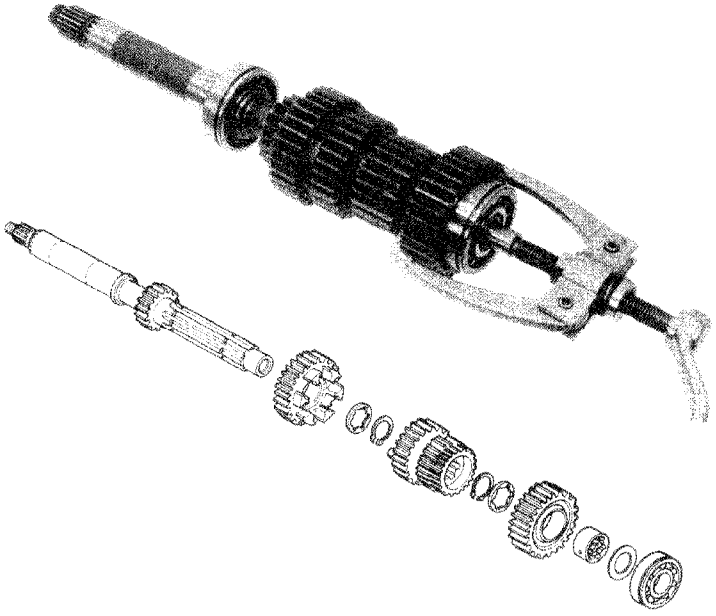

© 1976 American Honda Motor Co., Inc.
Printed in U.S.A. 7-78

Countershaft Removal

Remove the countershaft bearing cap.

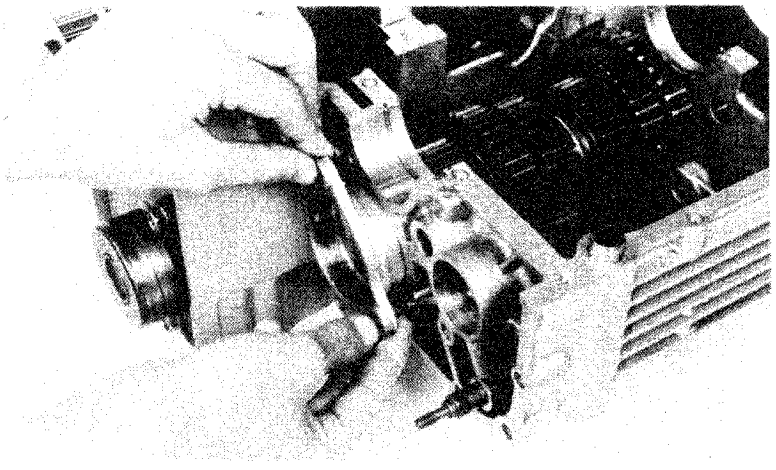

Remove the countershaft top gear through the bearing hole. Remove the shaft and the remaining gears through case.

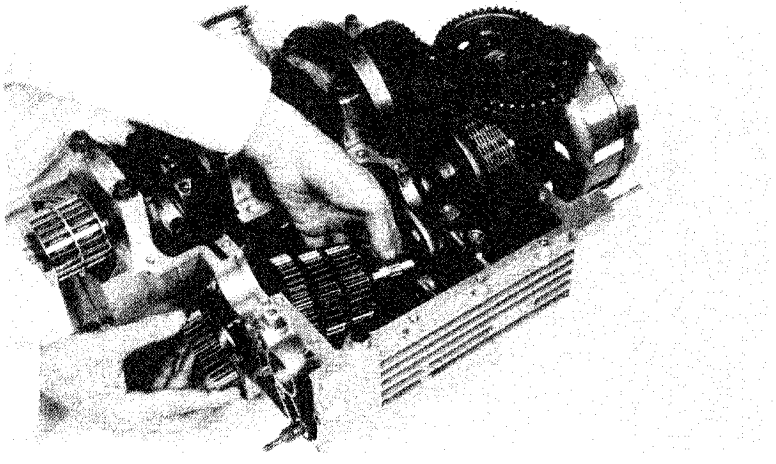

Note the locations of the bushing and spacers.

If any clearances seem abnormal, check them against the specifications.

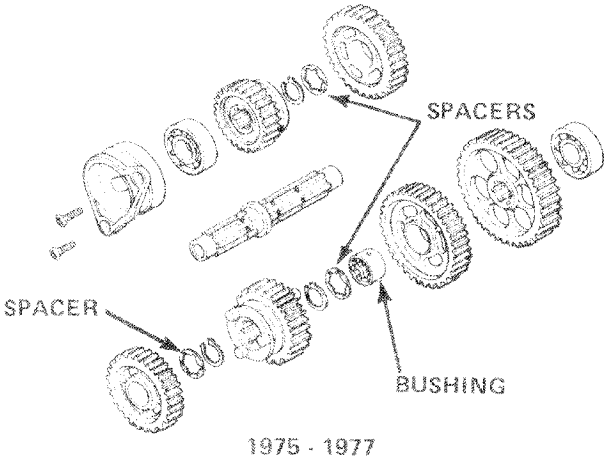

1975 - 1977

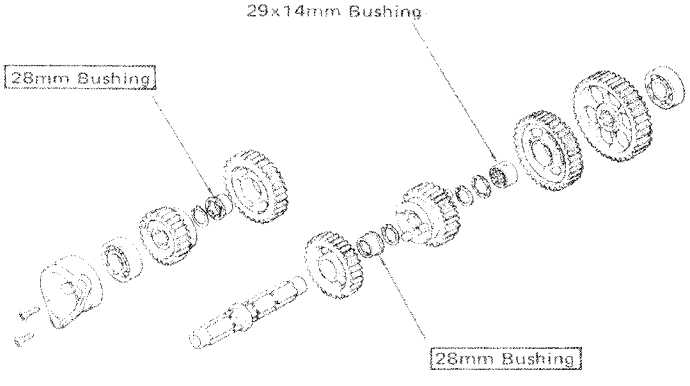

1978 - 1979

© 1978 American Honda Motor Co., Inc.
Printed in U.S.A. 7-78

TRANSMISSION DISASSEMBLY

Primary Drive Gear Removal

Remove the primary drive gear bearing.

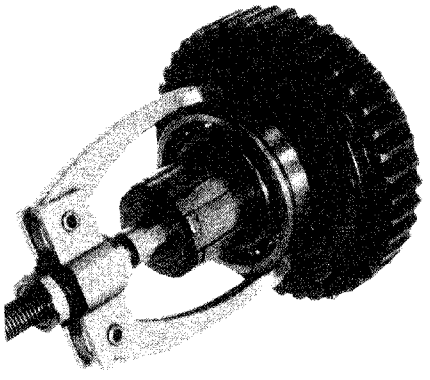

Inspect the inside roller bearing and the shaft ball bearing.

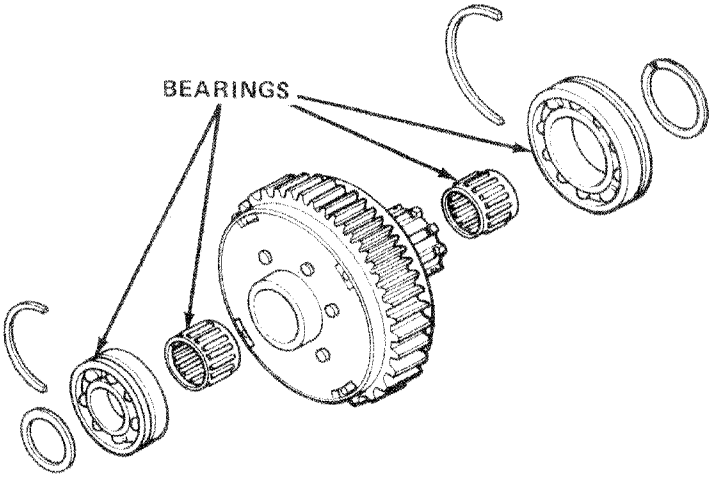

© 1978 American Honda Motor Co., Inc.
Printed in U.S.A. 7-78

OUTPUT SHAFT

Output Shaft Removal

Remove the output shaft and gear. Hold the gear in position and slide the shaft out of the case. Remove the gear through the access hole.

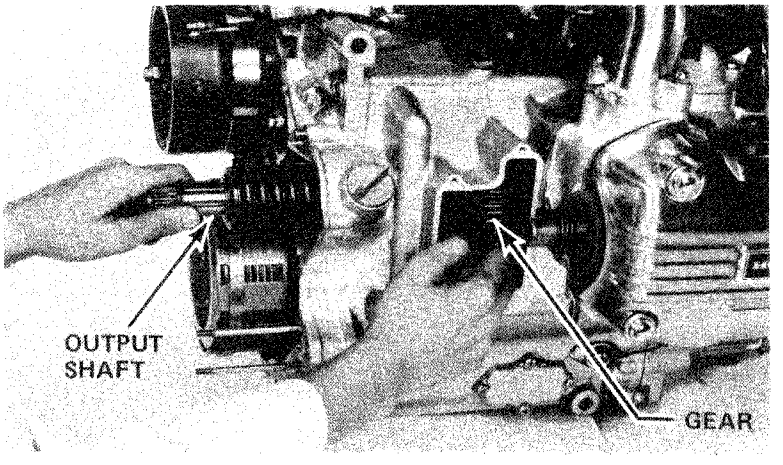

To disassemble the output shaft, compress the spring enough to remove the cotters.

NOTE
The Spring Compressor (HC 41331) can be used without a hydraulic press.

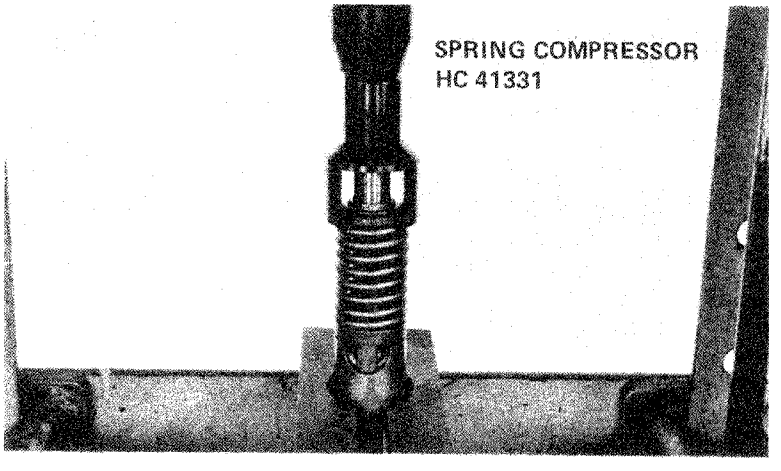

Check the spring free length. Inspect the damper lifter for abnormal wear. Check the shaft splines for damage.

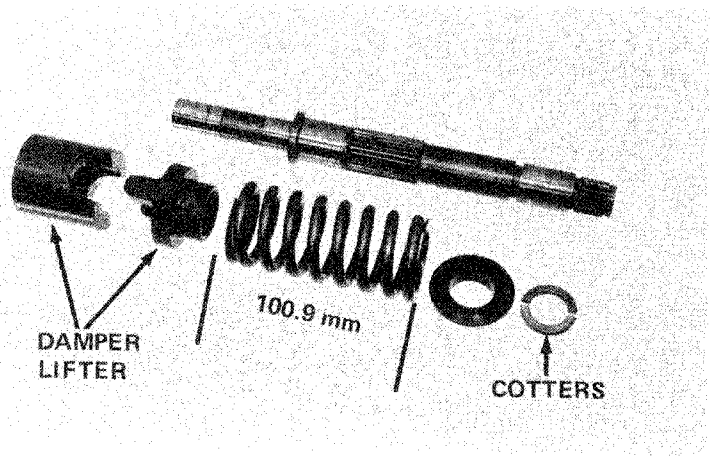

© 1976 American Honda Motor Co., Inc.
Printed in U.S.A. 7-78

Reassemble the shaft.

Inspect the assembled length of the spring.

Install the output shaft gear into the engine case. Install the output shaft from the rear of the engine case and push it through the gear. Make sure the splines on the gear and the shaft damper engage completely.

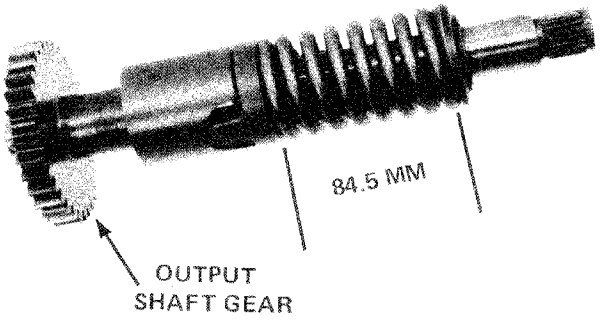

TRANSMISSION REASSEMBLY

Assemble the gears on the mainshaft and countershaft. Check the gears for freedom of movement on the shafts.

Check that all the circlips fit securely in their grooves.

CAUTION

When installing the gear bushings, be certain the shaft and bushing oil holes are aligned.

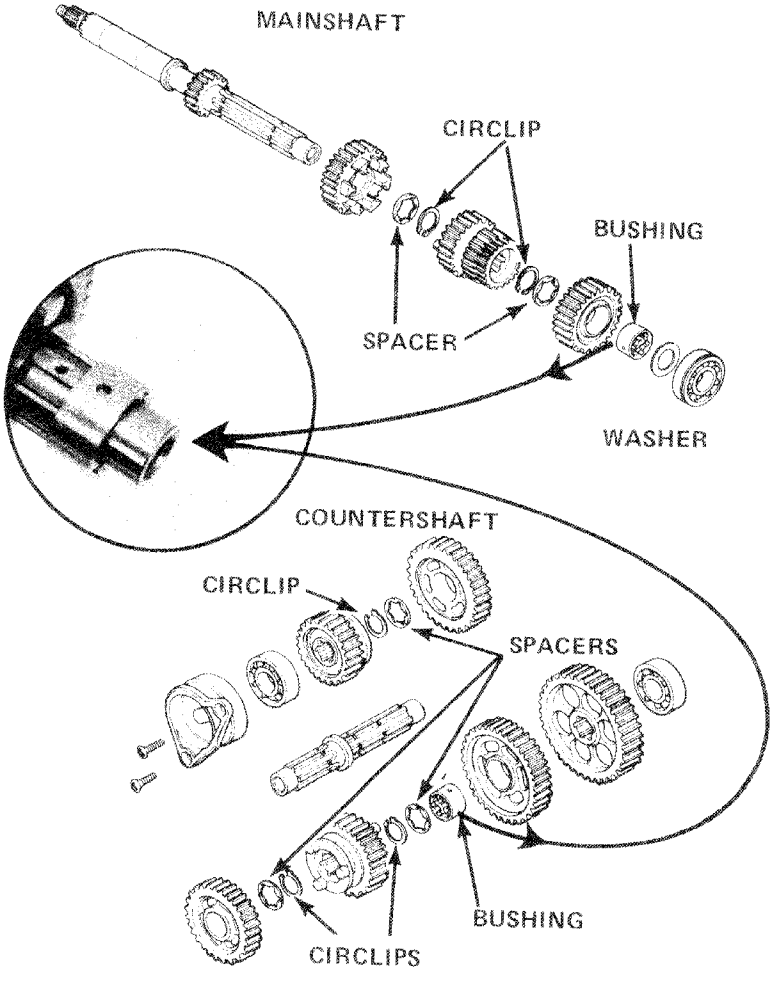

© 1976 American Honda Motor Co., Inc.
Printed in U.S.A. 7-78

With the bearings firmly in place on the mainshaft, measure the assembled length to insure proper alignment with case bearing set rings.

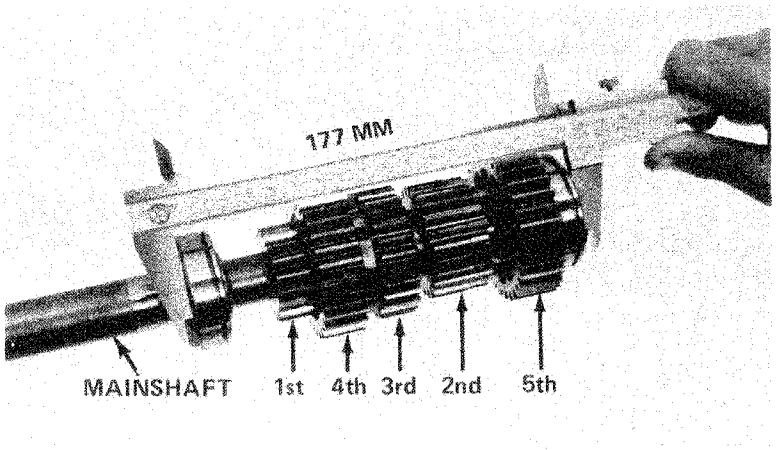

Countershaft Installation

Install the countershaft and the bearing holder. Be sure the oil passage is clean.

Press the holder into position by hand, then tighten the screws evenly.

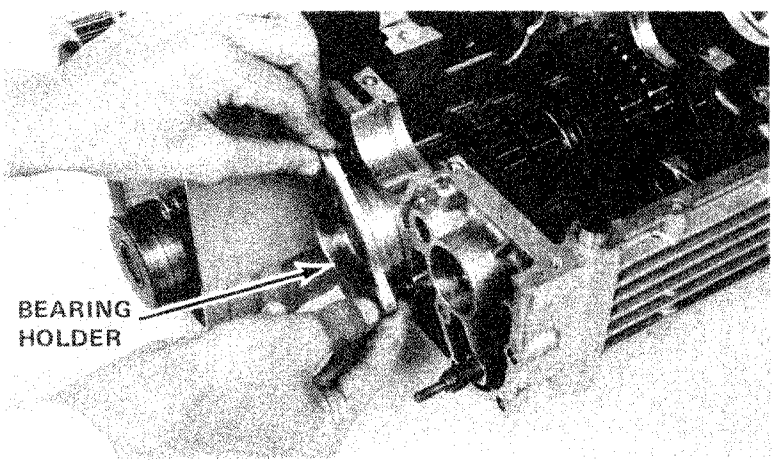

Shift Drum Installation

Install the shift drum and neutral switch. Tighten the neutral securing bolt and install the neutral wire.

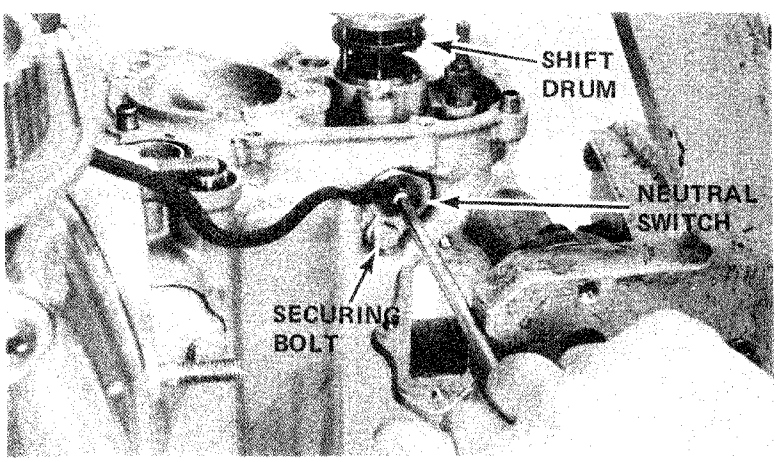

© 1976 American Honda Motor Co., Inc.
Printed in U.S.A. 7-78

TRANSMISSION REASSEMBLY

Shift Fork and Shaft Installation

Install the two countershaft shift forks and the mainshaft shift fork. Insert the shift fork shaft into the case and align the case and shaft pin holes and insert the shaft pin.

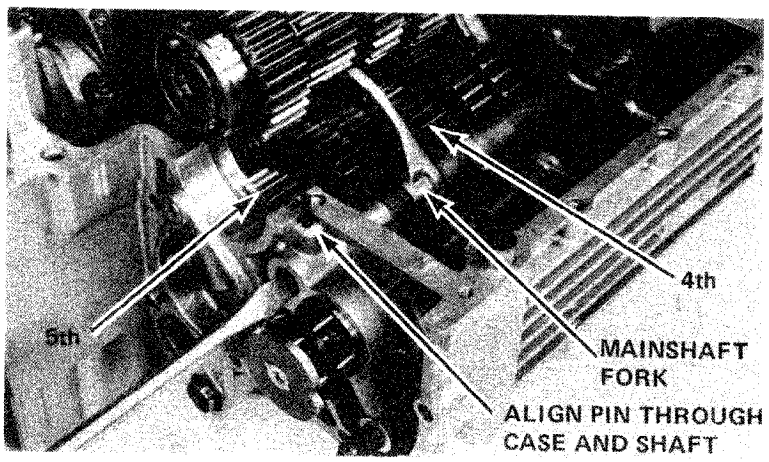

Mainshaft Installation

Install the mainshaft, oil separator and chain oiler.

Engage the shift fork into the gear and seat the bearings into the set rings.

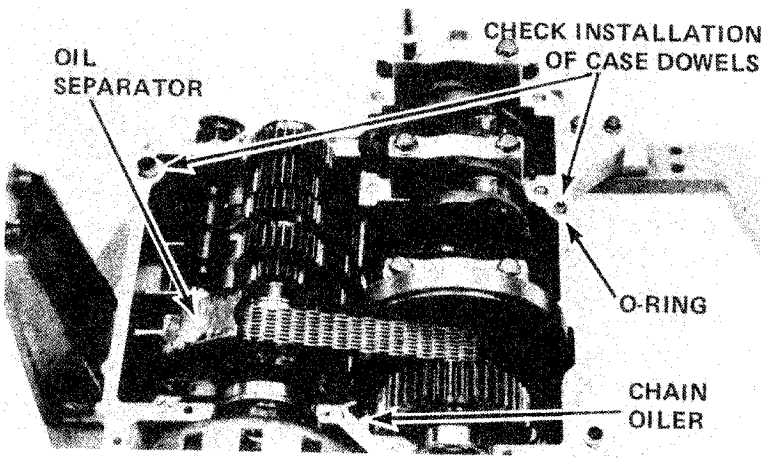

Align the mainshaft oil passage locator tab with the cylinder block groove.

CAUTION

The tab on the oil cap must be seated into the case indentation to allow proper oil circulation through the shaft. Make sure the tab is not cracked or damaged.

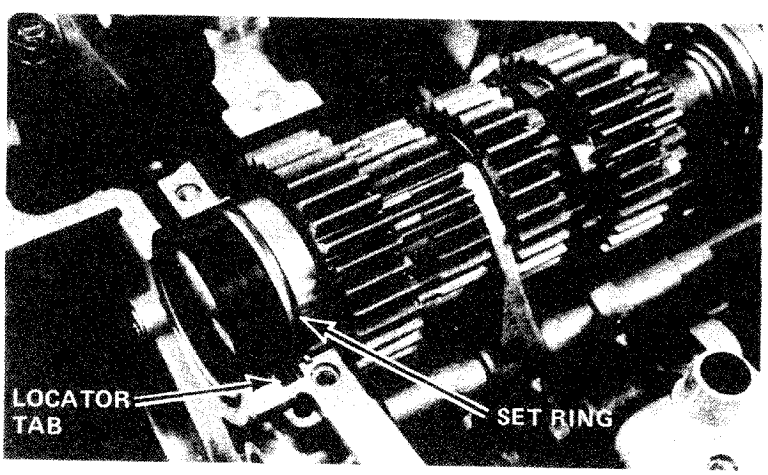

© 1976 American Honda Motor Co., Inc.
Printed in U.S.A. 7-78

CRANKCASE REASSEMBLY

Align the pistons to TDC and install the piston bases.

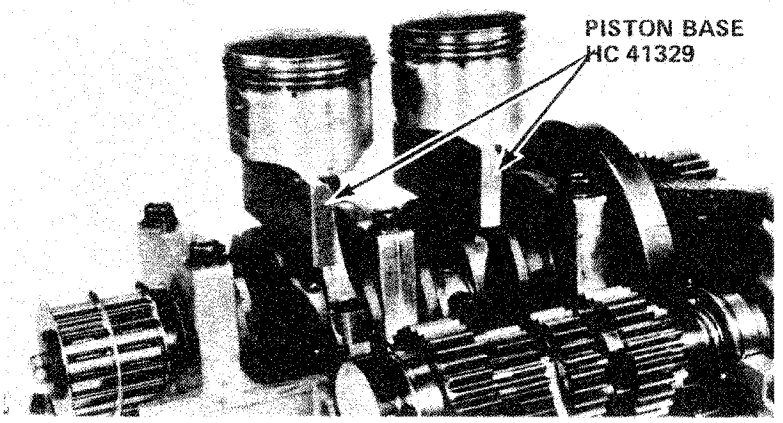

Apply sealant to the case joining surface.

Lubricate the cylinder walls with engine oil and lower the left case into position while engaging the shift arm into the drum.

NOTE

The left cylinders have a large chamfer that allows the rings to enter the cylinders without using a ring compressor.

Remove the piston bases and seat the case.

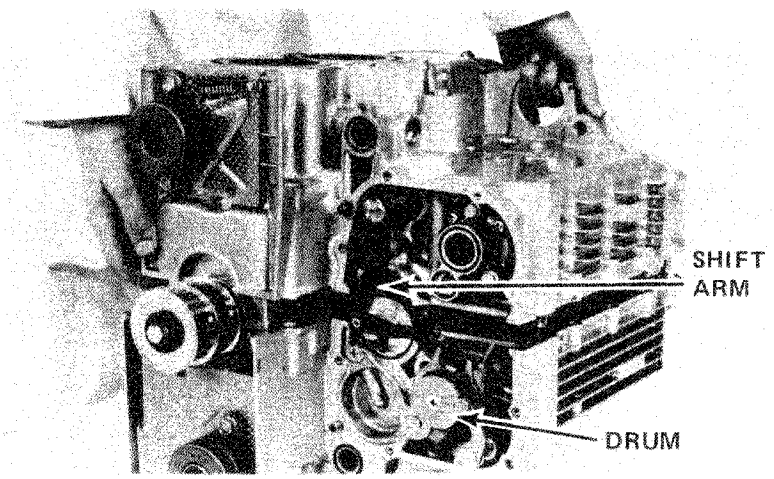

Coat all case bolts and the underside of the bolt heads with molybdenum disulfide grease and torque them as shown.

NOTE

The X pattern torque sequence for the 10 mm case bolts.

10 mm: 330 to 370 kg-cm (24-27 ft-lb)
8 mm: 250 to 290 kg-cm (216-252 in-lb)
6 mm: 100 to 140 kg-cm (87-122 in-lb)

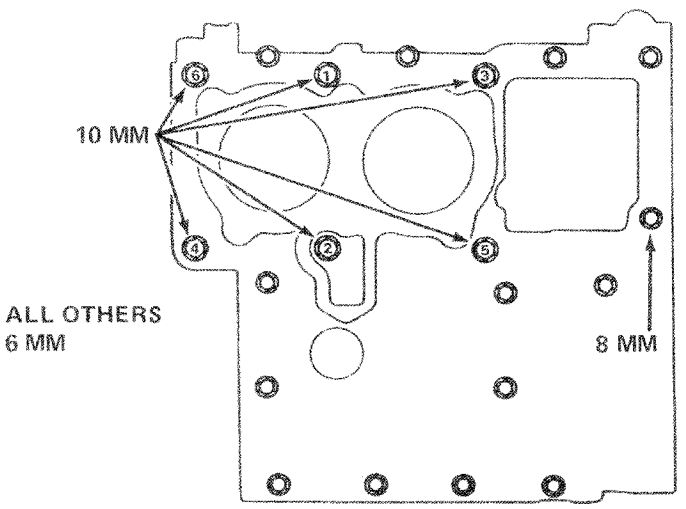

© 1976 American Honda Motor Co., Inc.
Printed in U.S.A. 7-78

TRANSMISSION CRANKCASE REASSEMBLY

Install stoppers.

Check the engagement of the transmission gears by operating the shift lever.

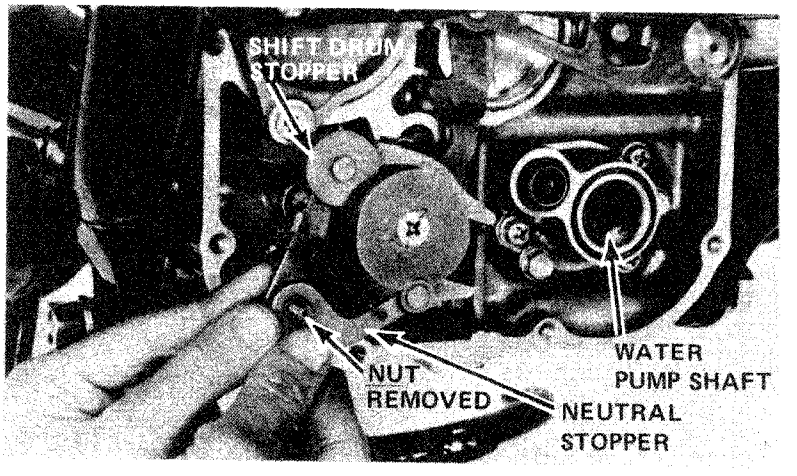

Front Cover Installation

Align the water pump impeller shaft with the drive train. Install all O-rings and the front cover.

CAUTION

Do not force the case into position. If it will not seat against the engine cases, rotate the water pump impeller until it engages the pump shaft.

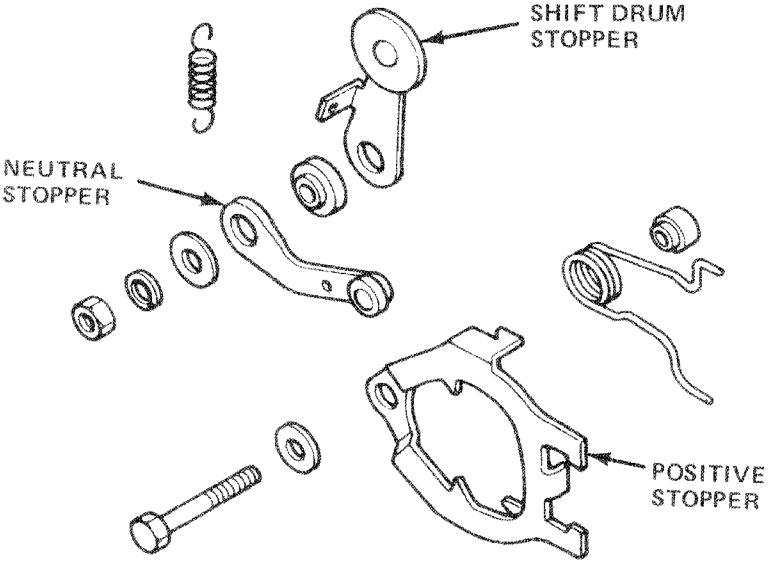

For cylinder head and timing belt installation see Section 5.

See Section 10 for clutch assembly.

For engine installation see Section 4.

© 1976 American Honda Motor Co., Inc.
Printed in U.S.A. 7-78

CASE SCREW AND BOLT SIZES

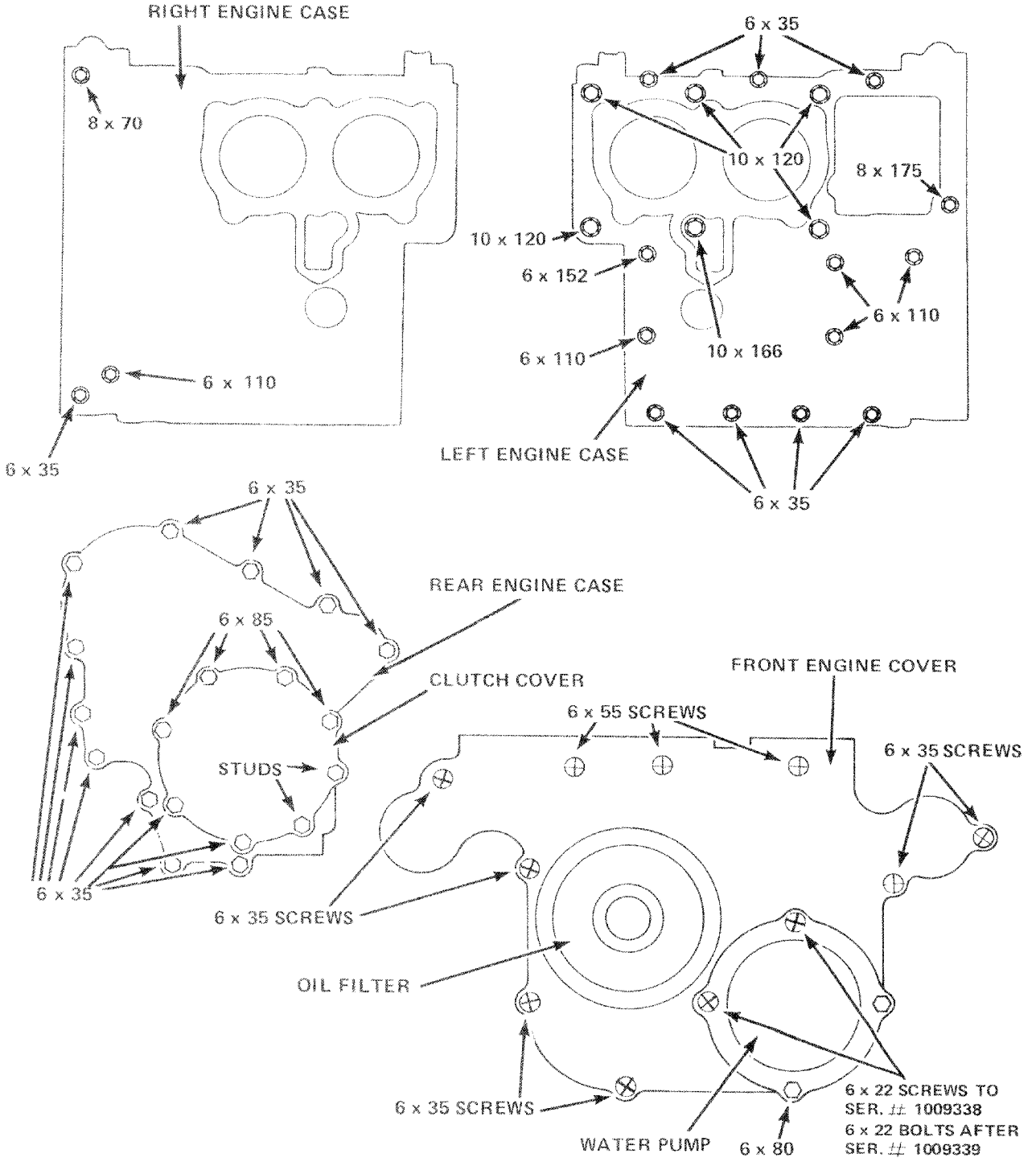

© 1976 American Honda Motor Co., Inc.
Printed in U.S.A. 7-78

12
FINAL DRIVE

SERVICE INFORMATION 12-2
TROUBLESHOOTING 12-4
DRIVE HUB 12-5
DRIVE SHAFT 12-14
INSTALLATION OF DRIVE SYSTEM 12-17
MAINTENANCE 12-20

© 1978 American Honda Motor Co., Inc.
Printed in U.S.A. 7-78

SERVICE INFORMATION

Specifications

Hypoid gear oil
SAE 90 above 5°C (41°F)
SAE 80 below 5°C (41°F)

Quantity: 210 milliliters (7 oz)

Backlash

Ring and pinion: 0.08 to 0.18mm (0.0031 - 0.0071 in)
Service limit: 0.25mm (0.098 in)

Pinion coupling to driveshaft: 0.3mm (0.012 in)
Universal joint to engine: 0.3mm (0.012 in)

Ring gear control spacer

0.040mm increments
Each change in spacer size will cause a 0.025mm change in backlash.

Preload

Pinion Assembly Preload
Pull Scale Method: 700 to 1100 grams (1.54 to 2.43 lb)
Torque Wrench Method: 3.5 to 5.5 kg-cm (48 to 76 in-oz)

Hub Assembly Preload
Pull Scale Method: 1140 to 2100 grams (2.51 to 4.63 lb)
Torque Wrench Method: 5.7 to 10.5 kg-cm (80 to 146 in-oz)

Torque Values

Ring gear
Bearing retainer: 400 kg-cm (29 ft-lb)
Back off and retighten to 100 kg-cm (87 in-lb)
8mm flange bolts: 230 to 280 kg-cm (200 to 243 in-lb)
Swing arm pivot adjusters LH: 100 kg-cm (87 in-lb) back off 1/8 turn
Pivot lock nuts: 8.0 to 12.0 kg-m (58 to 87 ft-lb)
Hub attaching nuts: 350 to 450 kg-cm (25 to 33 ft-lb)
Hub drain bolt: 100 to 140 kg-cm (87 to 122 in-lb)
Rear axle nut: 8.0 to 10.0 kg-m (58 to 72 ft-lb)
Pinion Bearing preload nut: 7.0 to 9.0 kg-m (51 to 65 ft-lb)
Caliper Stay Bolt: 500 to 600 kg-cm (36 to 43 ft-lb)

© 1976 American Honda Motor Co., Inc.
Printed in U.S.A. 7-78

FINAL DRIVE
SERVICE INFORMATION

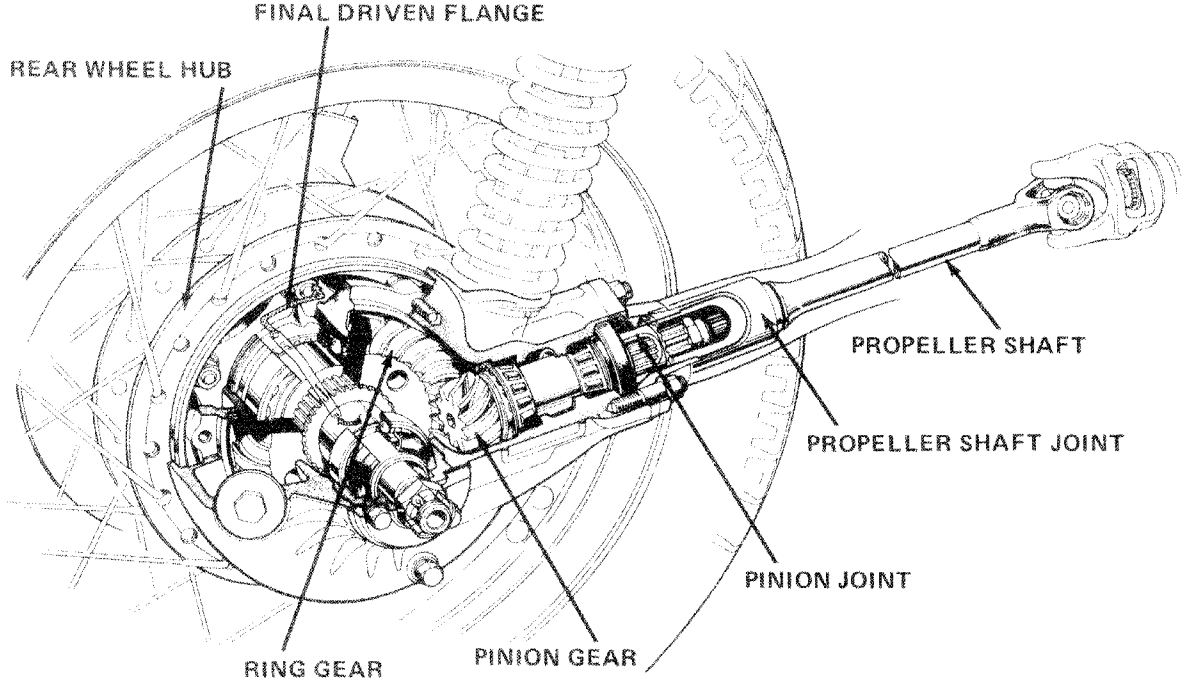

© 1976 American Honda Motor Co., Inc.
Printed in U.S.A. 7-78

Working Practice

The drive system requires no external adjustment to compensate for normal wear.

The only internal adjustment that can be accomplished is ring and pinion backlash and depth of gear engagement. Both of these adjustments are made by the installation of a thinner, or thicker ring gear control spacer located between the ring gear and bearing.

If the rear pinion bearing, pinion gear, or ring gear become damaged, the drive hub must be replaced as an assembly. Before hub disassembly is attempted be certain all other possible causes of problems have been checked.

Tools and Materials

Circlip Plier	HC 41302	90°
Circlip Plier	HC 06277	Str.
Retainer Wrench	HC 41301	
Seal Tool	HC 41333	
Driver	HC 41332	
Seal Remover	HC 41327	
Sliding Weight	HC 41312	
Remover Handle	HC 41311	
Pinion Holder	HC 41305	
Driver	HC 41325	
Driver	HC 41318	
Bearing Remover	HC 41314	
Torque Wrench	0-25 kg-cm (0-300 in-oz)	
Torque Wrench	0-25 kg-m (0-150 ft-lb)	
Pull Scale		
Dial Indicator		
Indicator Stand		

TROUBLESHOOTING

Rear Wheel Will Not Rotate Freely

1. Rear brake caliper dragging
2. Damaged ring or pinion bearing
3. Damaged rear wheel bearings.

Noise

1. Ring or pinion bearing damage
2. Damaged drive spline
3. Insufficient lubricant.

Oil Leak

1. Clogged hub breather
2. Oil level too high
3. Seals damaged.

© 1976 American Honda Motor Co., Inc.
Printed in U.S.A. 7-78

DRIVE HUB

Drive Hub Removal

Place the motorcycle on the center stand.

Drain the hub oil only if the hub is to be disassembled.

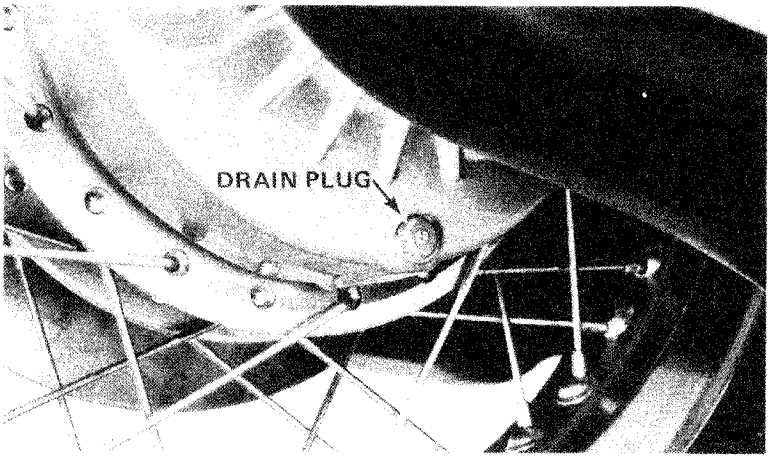

Remove both lower shock absorber bolts and the rear caliper stay bolt.

CAUTION

Place a block under the rear tire to prevent the axle from interferring with the exhaust system.

Remove the cotter pin, nut, and rear axle.

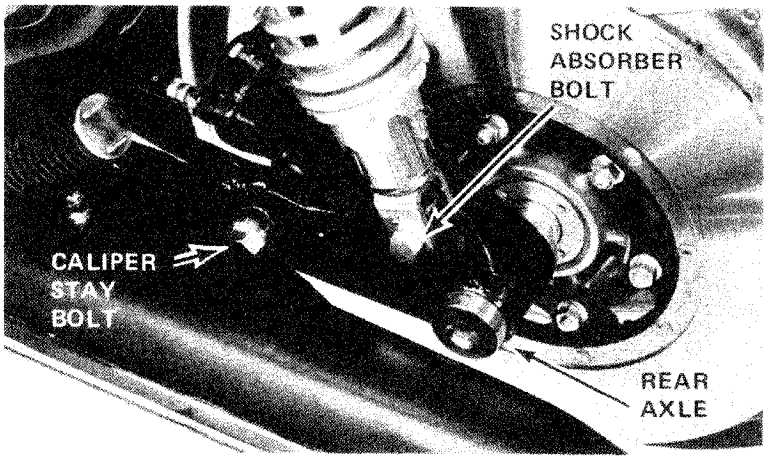

Raise the caliper over the swing arm and out of the way to prevent damage when the wheel is removed.

Disengage the rear wheel from the hub drive spline and remove the wheel.

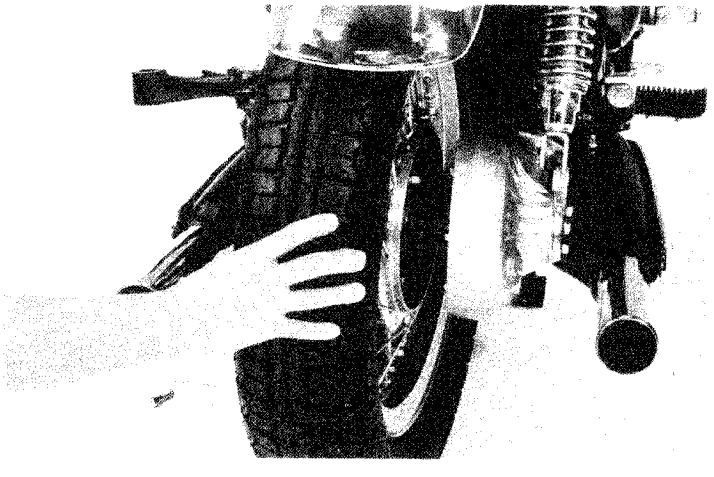

© 1976 American Honda Motor Co., Inc.
Printed in U.S.A. 7-78

Loosely reinstall the left shock absorber bolt to support the swing arm.

Remove the three attaching nuts and slide the hub free.

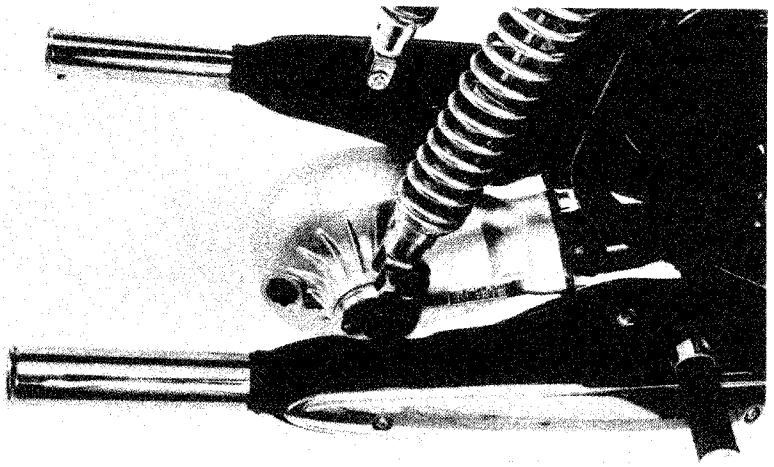

Ring Gear Carrier Removal

Remove the ring gear bearing preload lock tab and the distance collar.

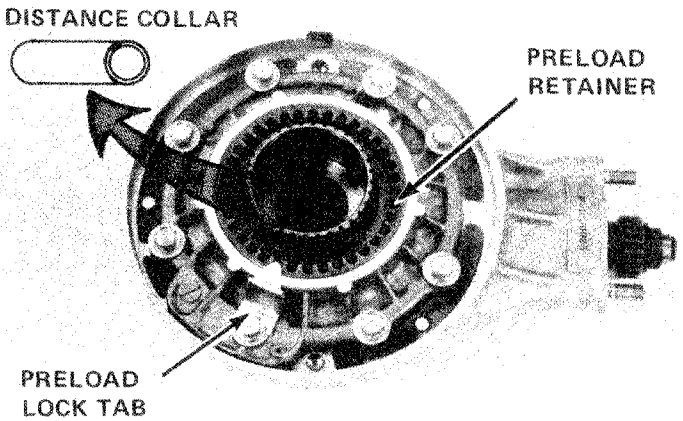

Remove the ring gear bearing preload retainer.

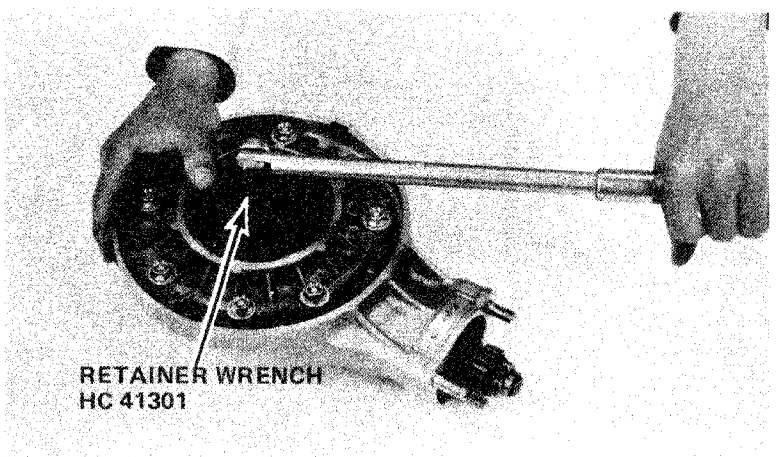

© 1976 American Honda Motor Co., Inc.
Printed in U.S.A. 7-78

FINAL DRIVE
DRIVE HUB

Remove the left gear case cover flange bolts.

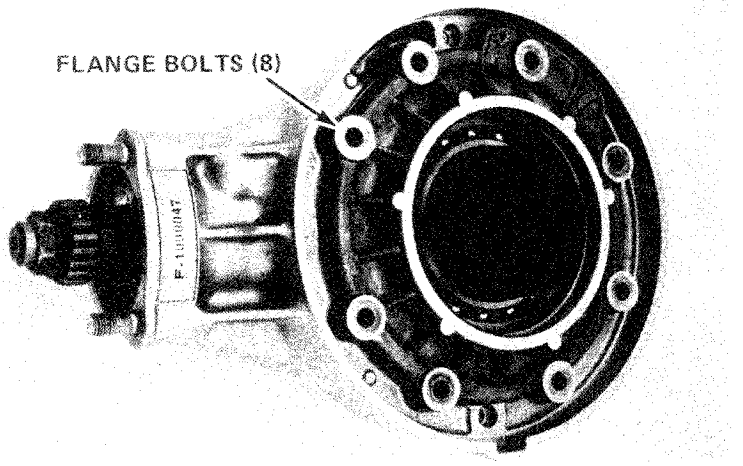

Remove the gear case cover and the ring gear.

Note the control spacer location.

Inspect the hub vent holes for obstruction.

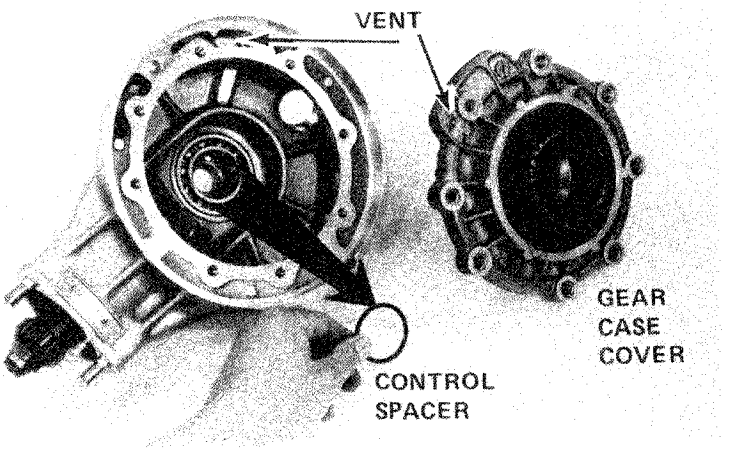

To aid in disassembly, heat the gear case cover to 80°C (176°F).

Drive the ring gear from the gear case cover with a plastic hammer or use a press.

Always replace the seal after this operation.

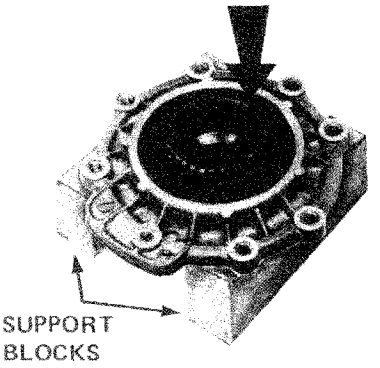

© 1976 American Honda Motor Co., Inc.
Printed in U.S.A. 7-78

Inspect the 6914 bearing for smooth operation. If replacement is necessary, remove the bearing with a press.

NOTE

Bearing removal procedure damages the bearing. Replace the bearing with a new one.

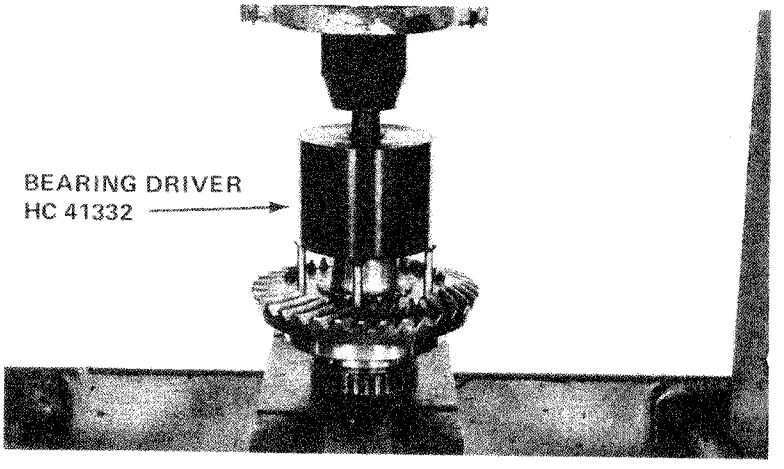

Install the new bearing on the ring gear shaft with the bearing driver.

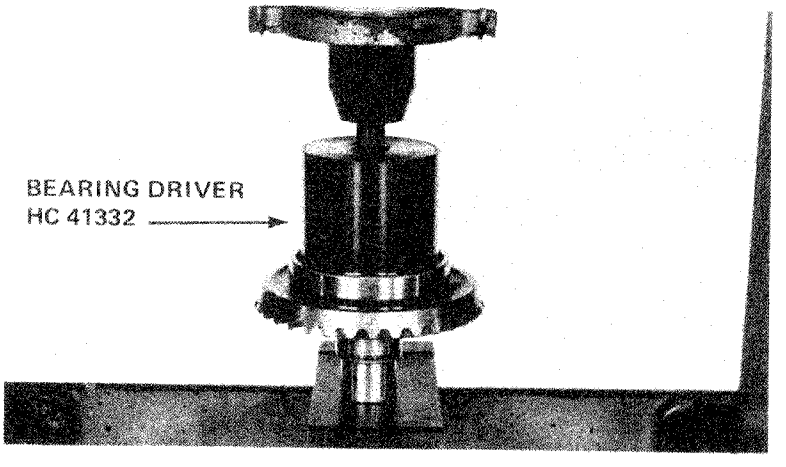

Grind off the staked portion of the 16mm nut or pry the staked area up.

CAUTION

During this operation, be careful not to damage the threads of the drive pinion.

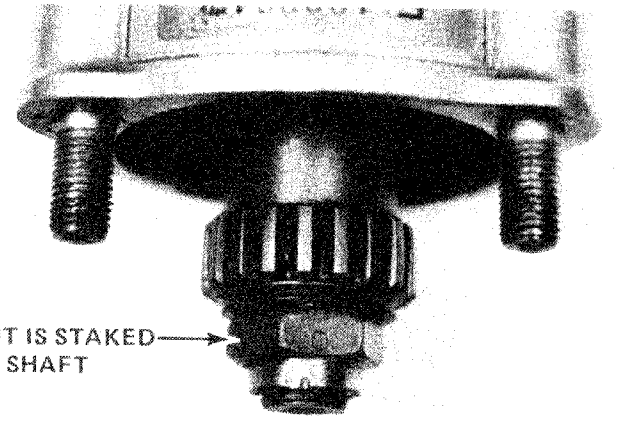

© 1976 American Honda Motor Co., Inc.
Printed in U.S.A. 7-78

FINAL DRIVE
DRIVE HUB

Secure the spline with the pinion holder HC 41305 and remove the nut and washer.

Remove the pinion shaft spline coupling.

Remove the pinion gear and collar through the case.

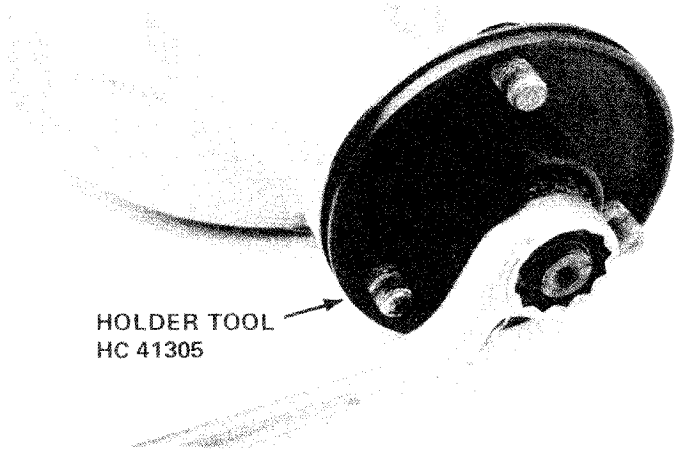

Observe the location of the spacer collar and O-ring. Wash and inspect the condition of the bearing for smooth rotation. Check the pinion gear for evidence of wear.

CAUTION

Do not remove the rear bearing from the shaft. If the pinion gear or bearings are damaged the drive hub must be replaced as an assembly.

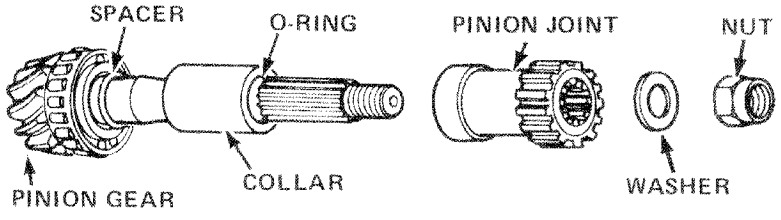

Seal Removal

Thread the seal remover tool into the pinion seal. Install the remover handle and use the sliding weight to remove the seal.

Do not re-use the seal.

Remove the front pinion bearing.

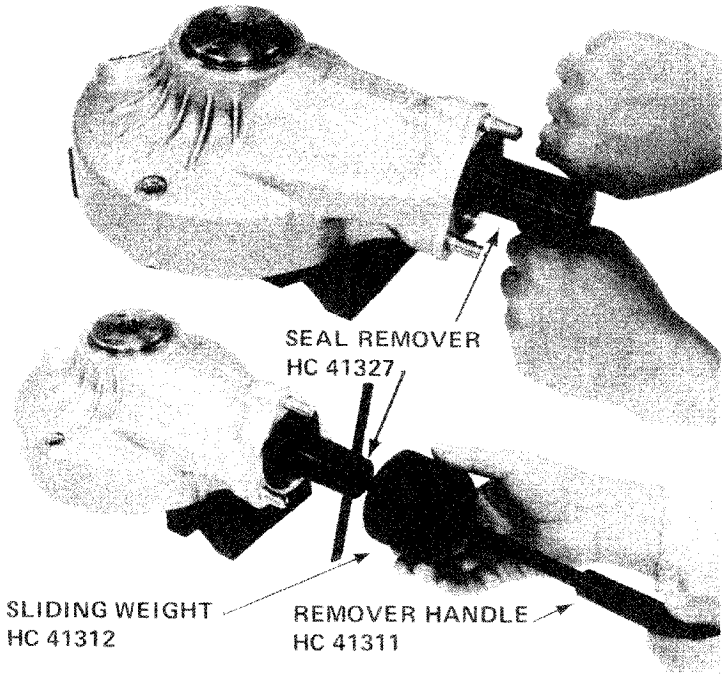

© 1976 American Honda Motor Co., Inc.
Printed in U.S.A. 7-78

Case Bearing Removal

Remove the shock absorber mount and seal.

NOTE

If any internal hub components are replaced, the ring and pinion preload and gear engagement hub backlash must be rechecked.

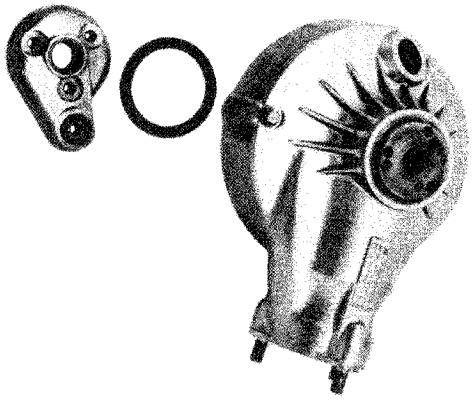

If bearing replacement is necessary, install the ball bearing remover pawls securely on the inner race. Spread the pawls by turning the shaft clockwise. Use the sliding weight to remove the bearing.

Do not re-use the case bearing.

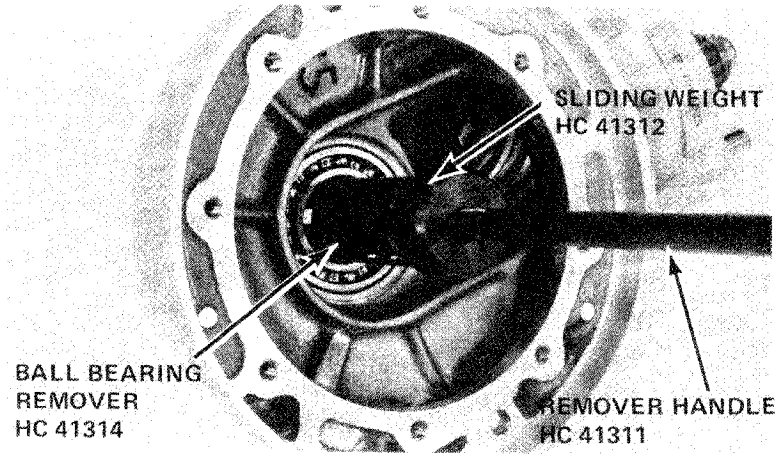

Remove the seal.

Do not damage the threads in the hub while driving out the oil seal.

Do not re-use the seal.

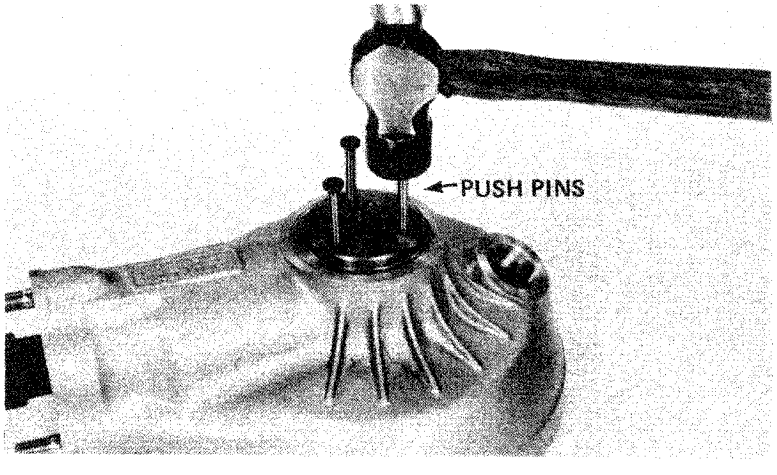

© 1976 American Honda Motor Co., Inc.
Printed in U.S.A. 7-78

FINAL DRIVE
DRIVE HUB

Hub Assembly

Install a new seal and bearing.

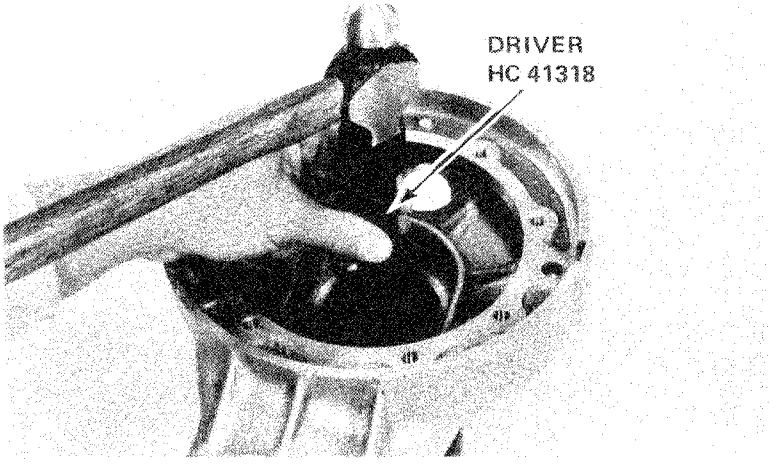

Install the spacer, collar and O-ring on the pinion shaft.

Install the pinion shaft in the housing.

Install the front pinion bearing in the case and drive the new seal into position.

CAUTION

Lubricate the seal and shaft with NLGI-2 grease before installation to prevent damage.

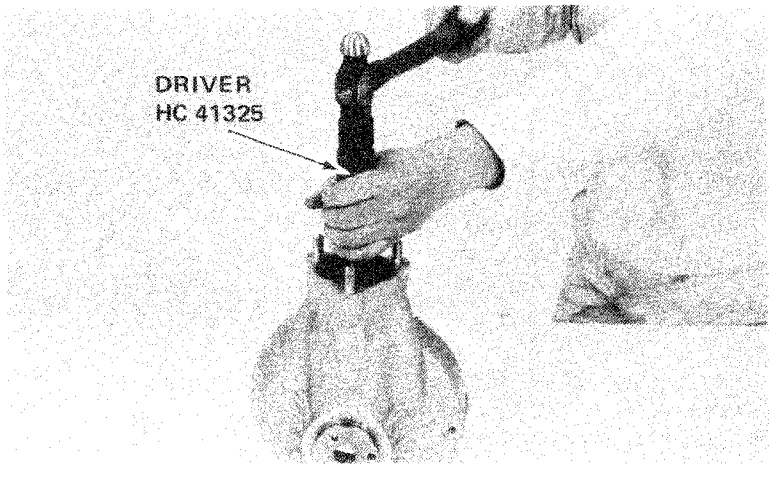

Install the spline, the coupling, washer and nut. Torque nut to specifications.

NOTE

Clean the 16mm nut and washer to remove all grease before torquing.

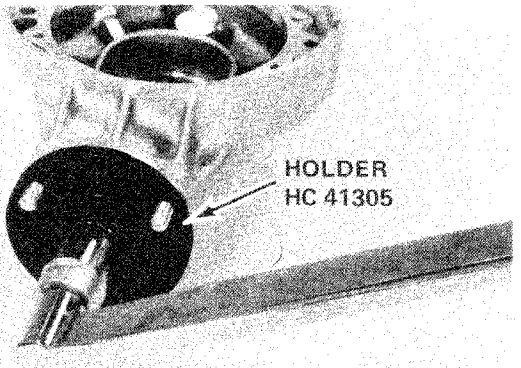

TORQUE 7.0 kg-m (51 ft-lb)

© 1976 American Honda Motor Co., Inc.
Printed in U.S.A. 7-78

Pinion Preload Inspection

Run a 1.5m long string through a bolt hole in the pinion gear holder and wind it around the outside of the groove.

Attach a spring scale to the string and measure the force needed to turn the holder at one revolution per second.

If the pinion preload is below the minimum, reverse the gear holder and increase the torque on the 16mm nut slightly and recheck the preload.

If the torque on the 16mm nut reaches 9.0 kg-m (65 ft-lb) and the pinion preload is still below the minimum, the drive hub must be replaced.

NOTE
An alternate method of checking pinion and hub assembly preload is a rotational torque check. Using a 0-300 in-oz torque wrench and a 24mm socket, observe the torque required to rotate the pinion nut through several rotations. See Page 12-2 for specifications.

NOTE
Torque required to begin pinion movement may exceed preload limits.

Stake the nut to the shaft.

Remove the preload retainer seal and install a new seal.

PINION PRELOAD
700 - 1100 G (1.54 - 2.43 lb)

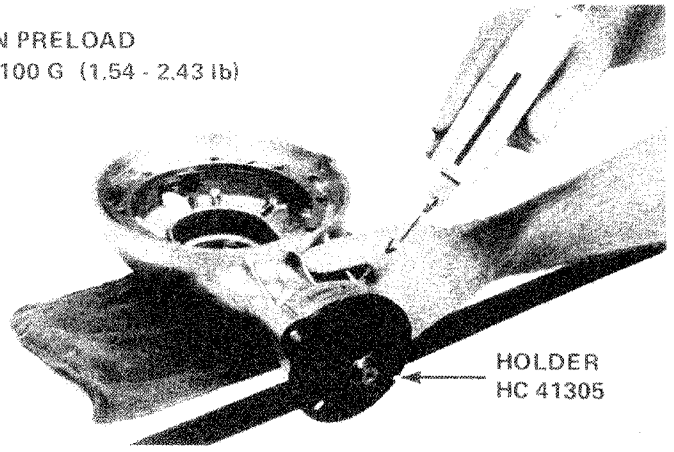

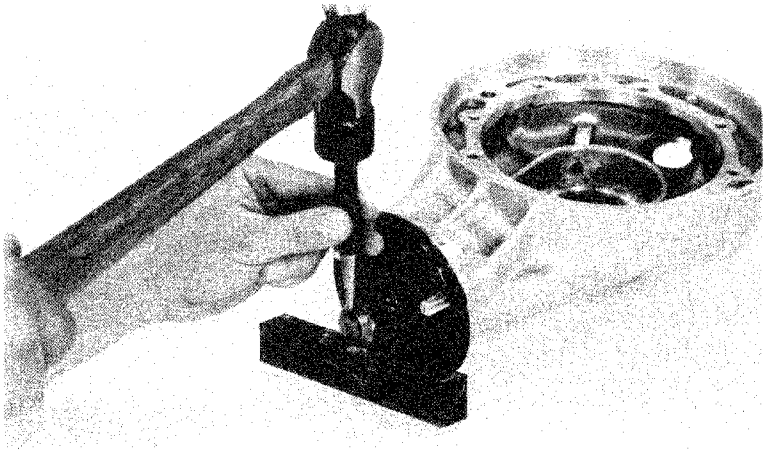

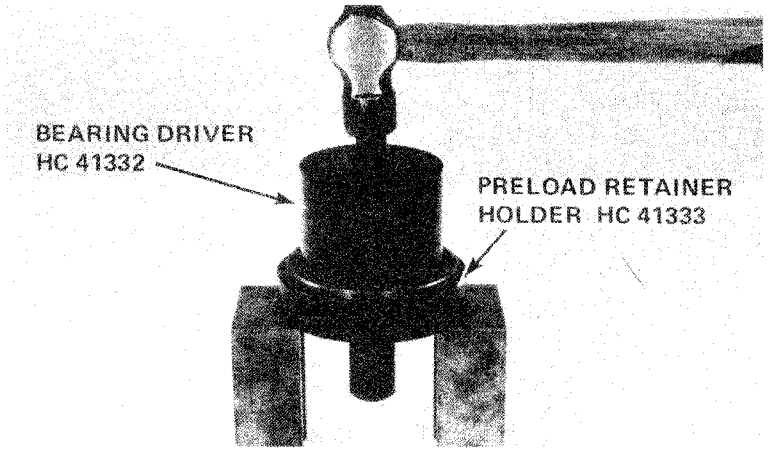

© 1976 American Honda Motor Co., Inc.
Printed in U.S.A. 7-78

FINAL DRIVE
DRIVE HUB

Install the ring gear, spacer, left gear case cover, and gasket in the hub case. Torque the flange bolts in a criss-cross pattern.

Install the preload retainer, torque to 400kg-cm (348 in-lb) back-off, and retorque to 100kg-cm (87 in-lb).

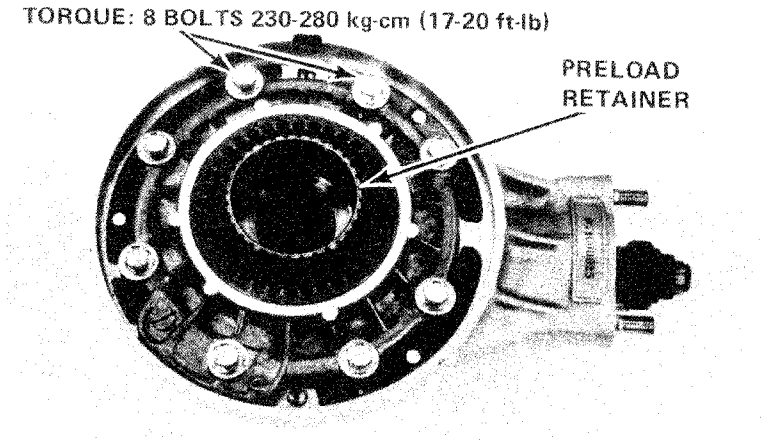

BACKLASH CHECK

Set up a dial indicator on the pinion splines. Hold the ring gear spline securely, rotate the pinion until gear slack is taken up. Turn the pinion back and forth to read backlash.

If the backlash is too great use a thinner spacer. If the backlash is too little use a thicker spacer.

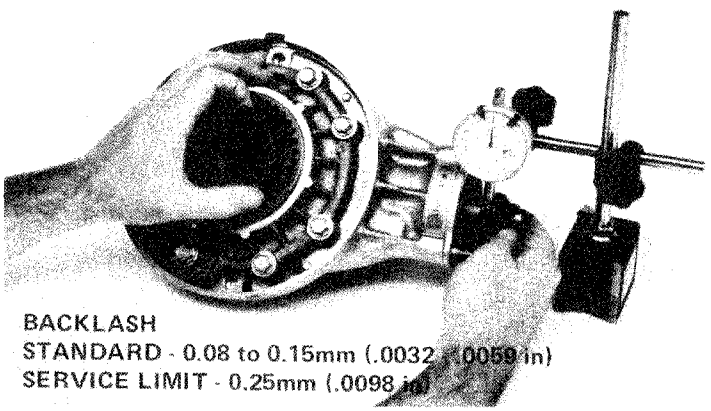

NOTE

Ring gear control spacers are available in increments of 0.040mm. Each change in spacer thickness will decrease or increase backlash 0.025mm.

Assemble the drive hub and check assembly preload as described under pinion preload 12-12.

If correct preload cannot be obtained, check the oil seal fit or preload retainer torque. If necessary, replace the final gear as an assembled unit.

Install preload retainer lock tab before final hub installation.

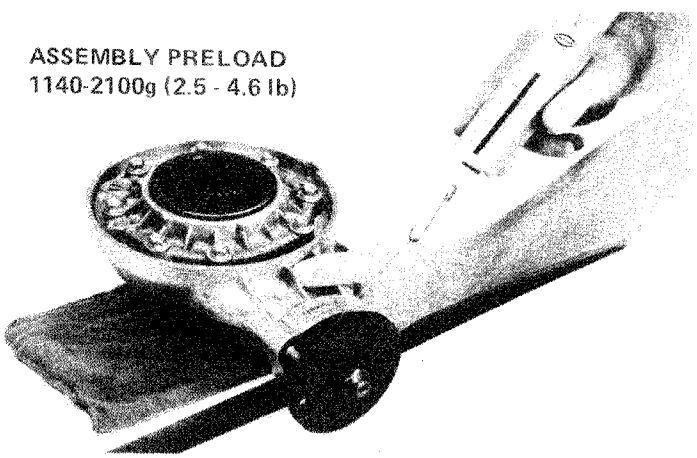

© 1976 American Honda Motor Co., Inc.
Printed in U.S.A. 7-78

DRIVE SHAFT

Drive Shaft Removal

Remove the rear wheel and the drive hub.

Detach the starter cable, battery vent hose and rear brake line from swing arm.

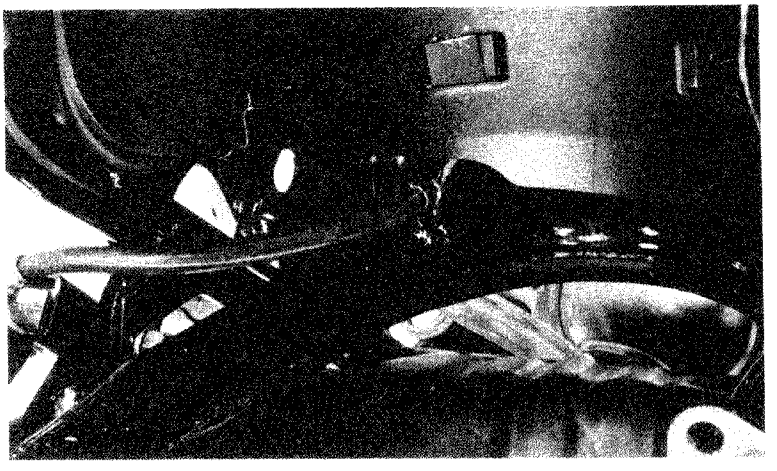

Loosen the pivot lock nuts on both sides and back out both pivot adjusters.

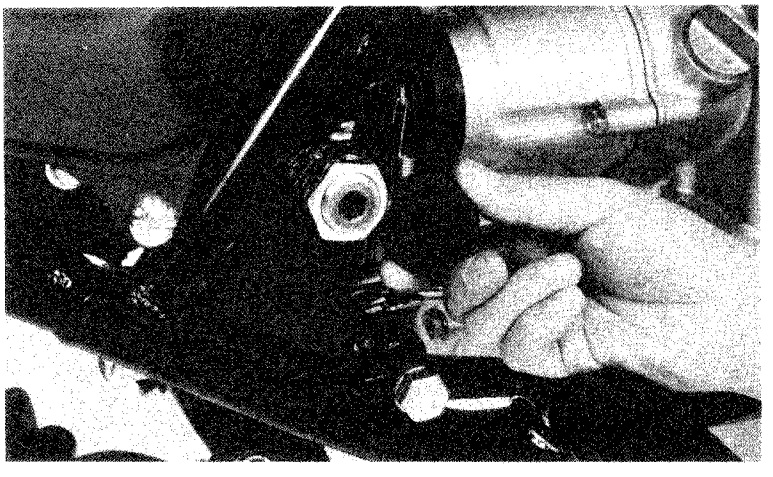

Detach the rubber boot and remove the universal joint circlip.

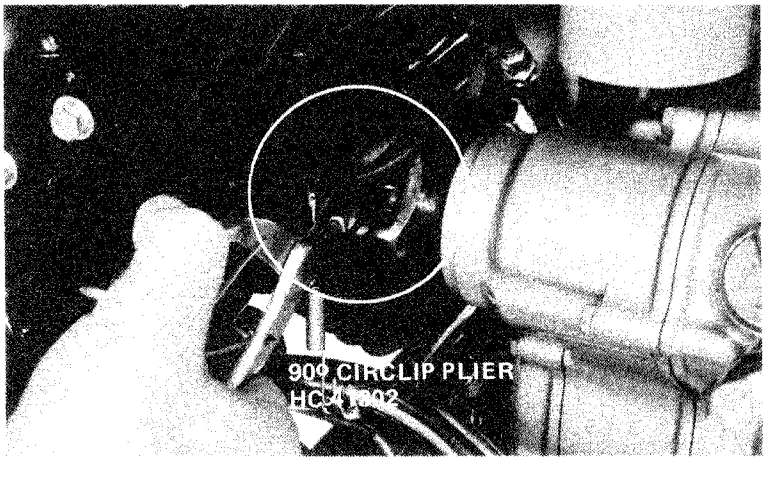

© 1976 American Honda Motor Co., Inc.
Printed in U.S.A. 7-78

FINAL DRIVE
DRIVE SHAFT

Remove the swing arm and shaft from the frame.

CAUTION

Rotate the swing arm slightly to the left to prevent damage to the rear brake cylinder. Do not damage the bearing covers.

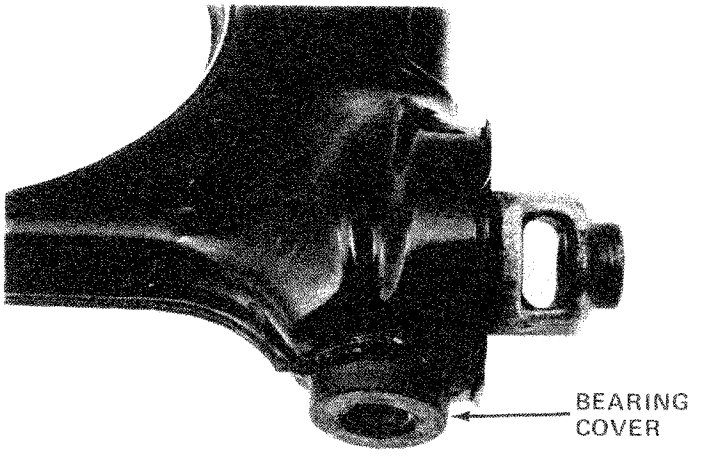

Remove the circlip and the drive shaft coupling. Remove the shaft from the swing arm.

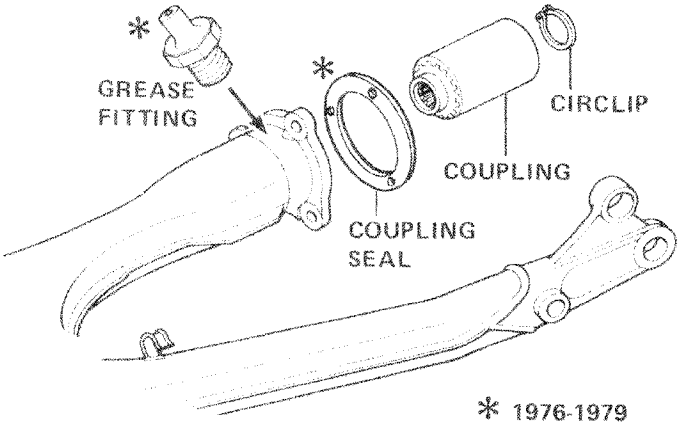

Inspect the universal joint.

There should be no play in the universal joint bearings. Rotate the shaft and joint in opposite directions. If there is any evidence of side play the shaft must be replaced.

CAUTION

When washing the splines for inspection do not allow solvent to contact the sealed universal joint bearings.

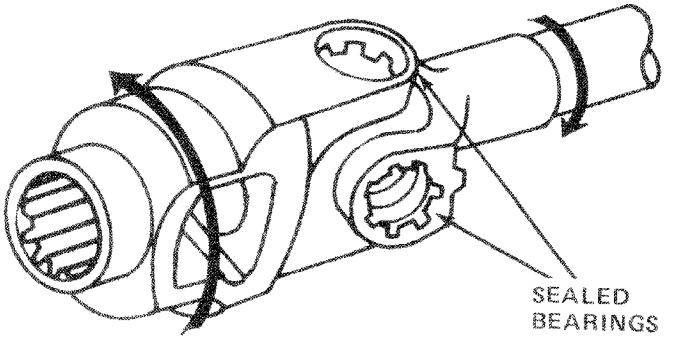

© 1976 American Honda Motor Co., Inc.
Printed in U.S.A. 7-78

Clean the splines of the rear coupling and check the backlash.

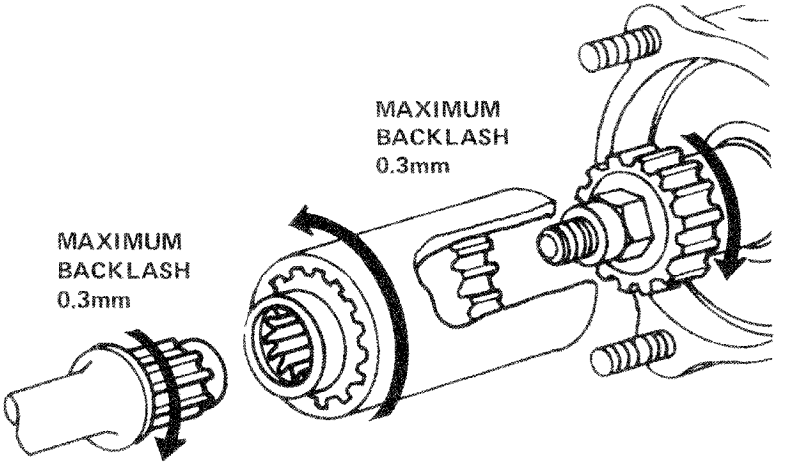

Check the backlash in the universal joint and final drive shaft.

NOTE
Splines may not show excessive backlash but still have worn or sharp edges. Excessively worn parts should be replaced.

NOTE
For swing arm inspection, see page 13-19.

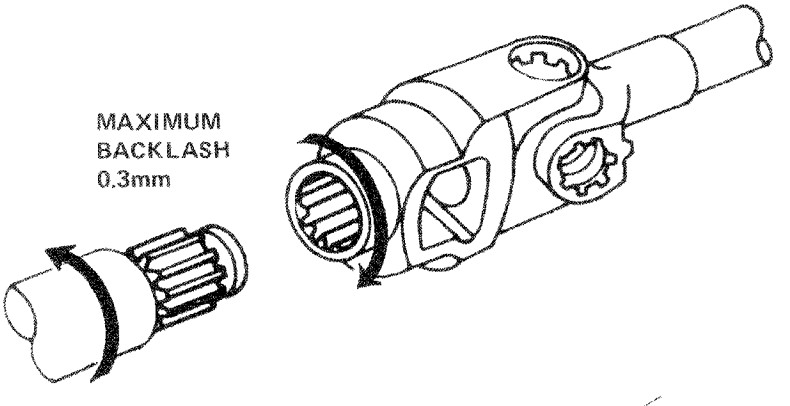

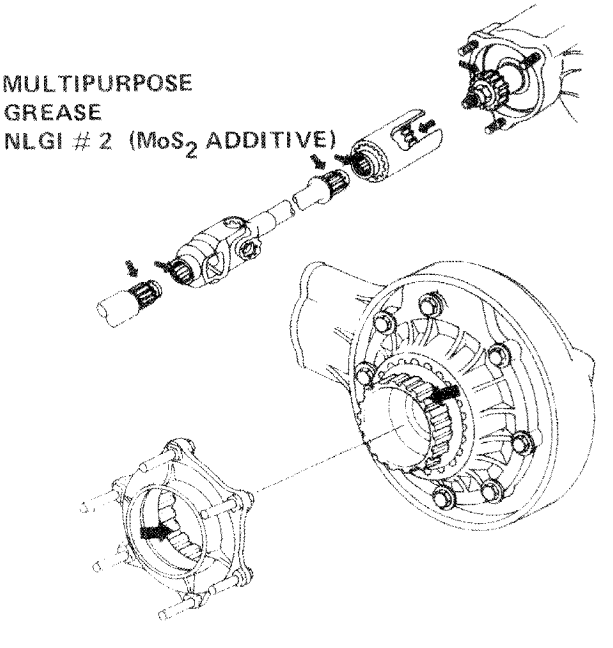

Lubricate areas indicated by arrows prior to assembly.

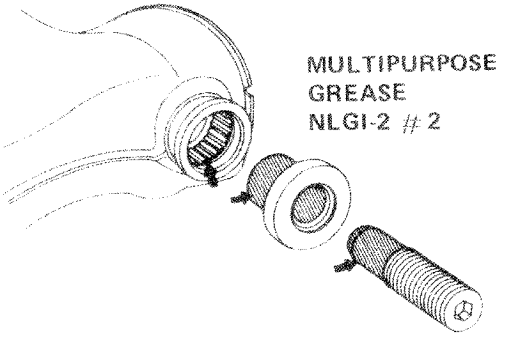

© 1976 American Honda Motor Co., Inc.
Printed in U.S.A. 7-78

INSTALLATION OF DRIVE SYSTEM

Lubricate the splines and install the shaft into the swing arm.

Inspect the rubber boot and replace it if it is cut or worn.

Install the swing arm into the frame. Align the universal joint and the final drive shaft before the swing arm is in position.

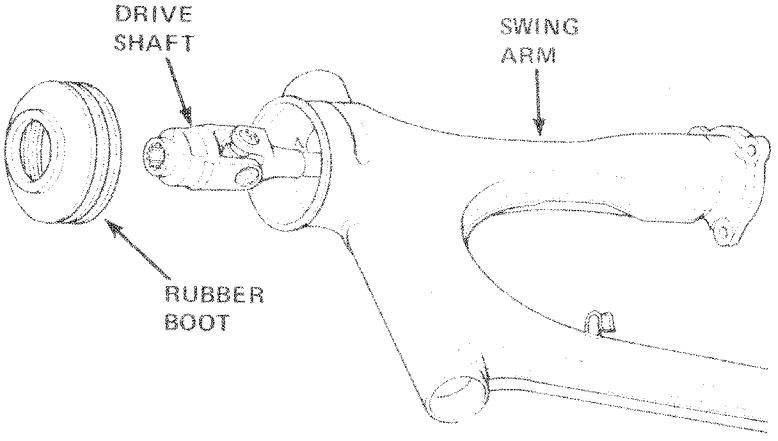

Inspect the pivot bolts for damaged bearing surfaces or threads.

Run both pivots in until only two threads extend through the lock nuts.

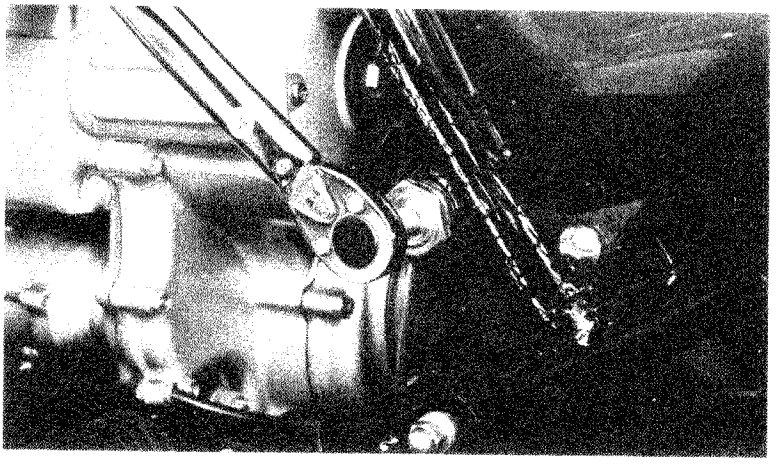

Torque the left pivot, and then back it out 1/8 turn. Check the swing arm for freedom of movement. If binding is felt, or if the arm will not move up and down freely, back out the pivots and check the condition of the bearings.

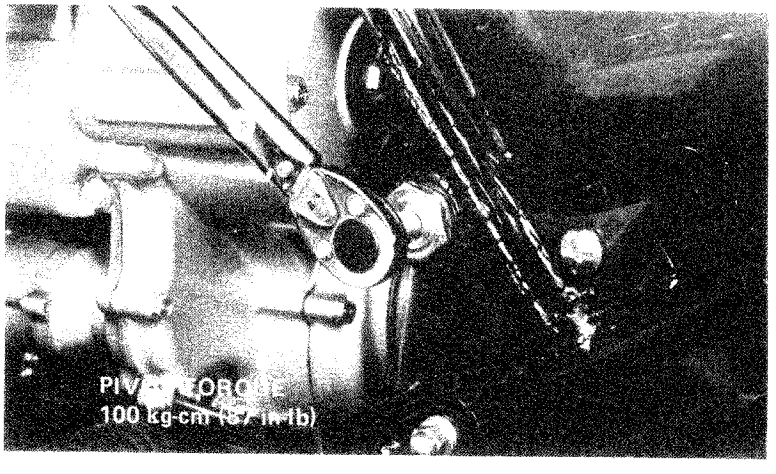

© 1976 American Honda Motor Co., Inc.
Printed in U.S.A. 7-76

Torque both lock nuts and recheck the swing arm for freedom of movement.

NOTE
Do not allow the pivot bolt to turn when tightening the lock nut.

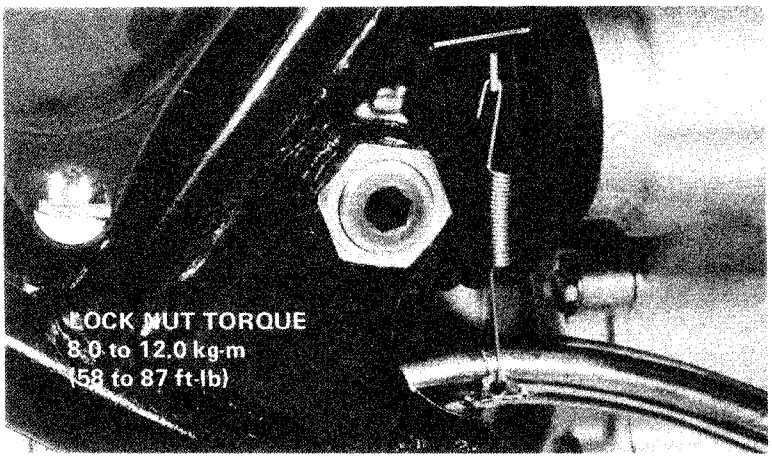

Install the universal joint circlip.

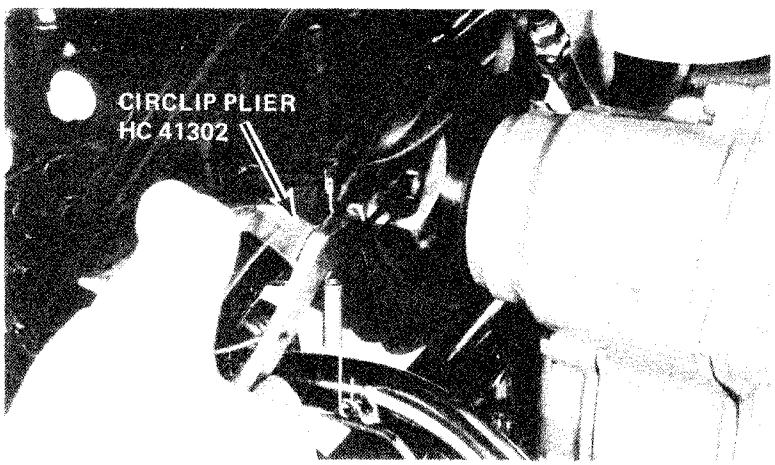

Install the rear coupling and circlip.

Pack the coupling with 50cc (40 grams) of multipurpose grease NLGI 2.

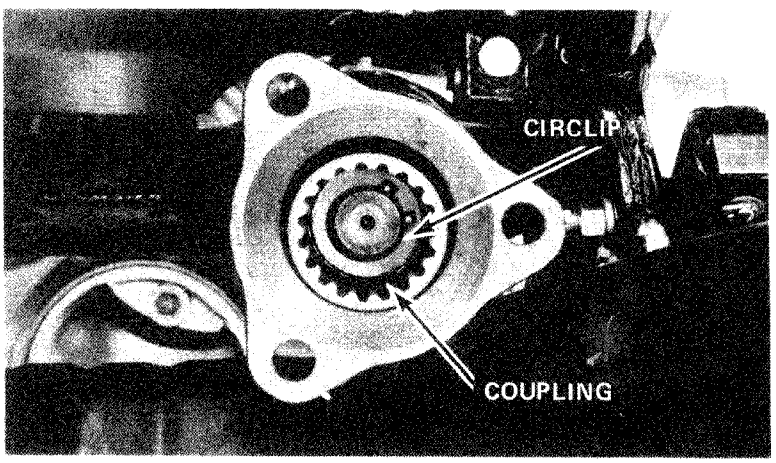

© 1976 American Honda Motor Co., Inc.
Printed in U.S.A. 7-78

INSTALLATION OF DRIVE SYSTEM

Install the hub assembly and torque the three attaching nuts.

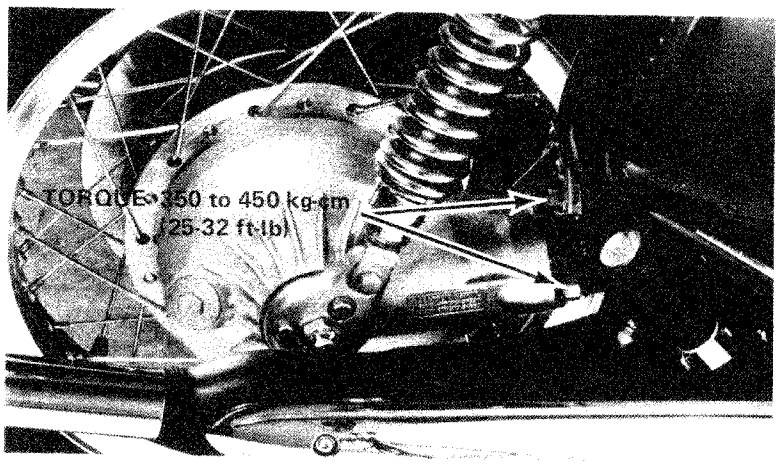

Install the rear wheel, caliper spacer, caliper, rear axle, and axle nut. Install and torque the caliper stay bolt.

Install and torque the lower shock absorber mounting bolts.

Reattach the starter cable, battery vent hose, and rear brake line to the swing arm.

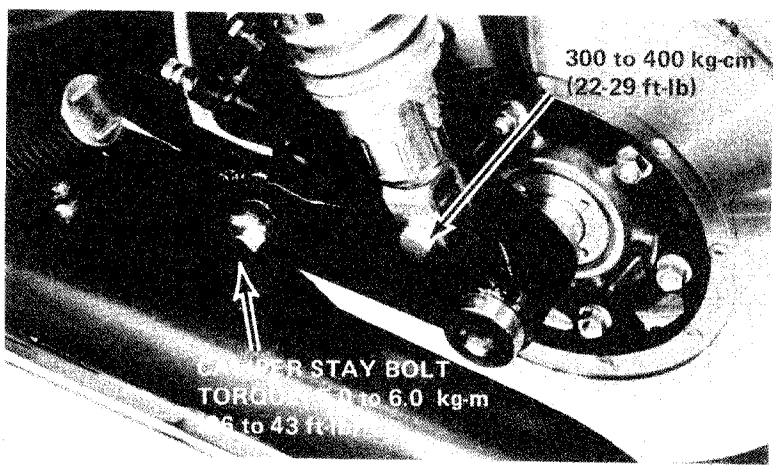

Torque the axle nut and install a new cotter pin.

Bring the oil level to the bottom thread of the filler hole.

Check for free rotation of the wheel.

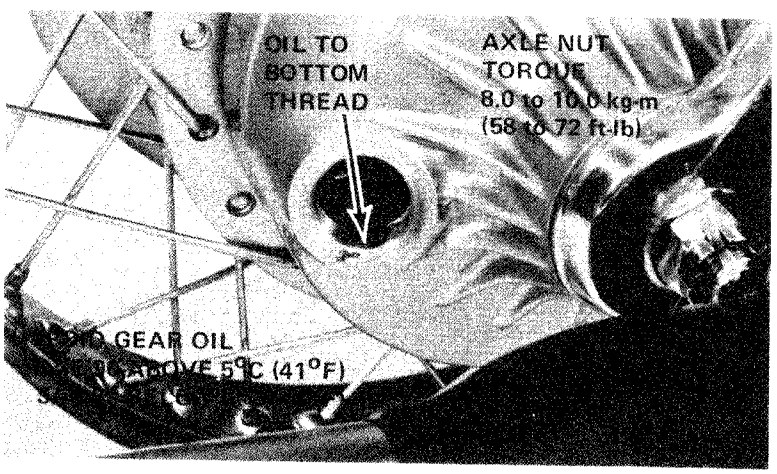

© 1976 American Honda Motor Co., Inc.
Printed in U.S.A. 7-78

MAINTENANCE

Drive Shaft Joint Lubrication

Apply lithium-based multi-purpose grease with molybdenum disulfide additive to the grease fitting.

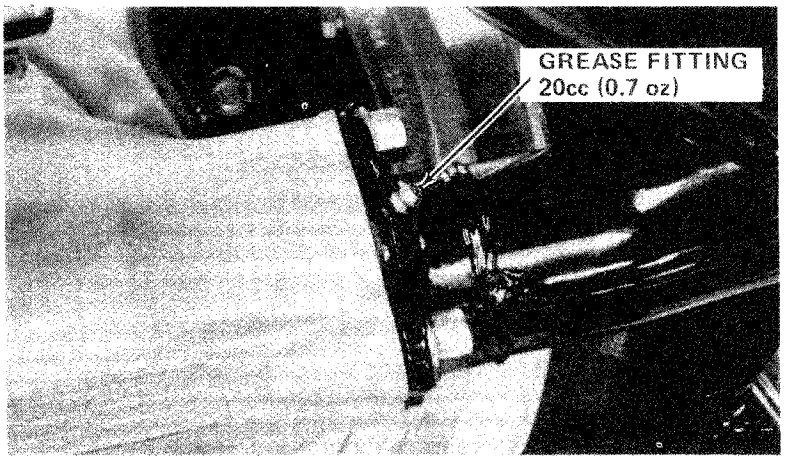

Final Drive Oil Level

With the motorcycle on the center stand on a level surface, remove the oil filler cap. The oil level should reach the filler neck.

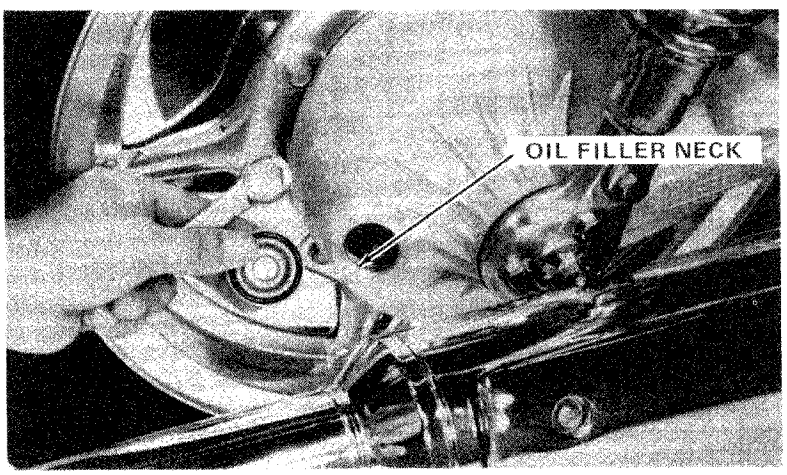

If the level is below the filler neck add the recommended lubricant until it reaches the filler neck threads. Reinstall the filler cap.

CAUTION

Do not allow foreign matter to enter the final drive gear case.

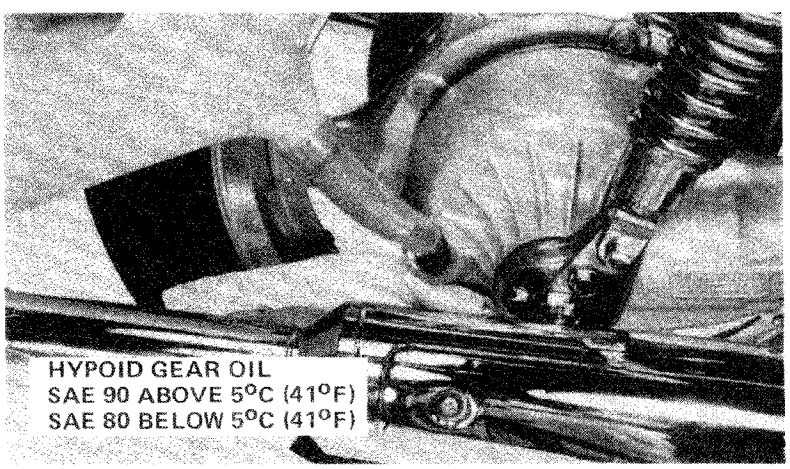

© 1978 American Honda Motor Co., Inc.
Printed in U.S.A. 7-78

FINAL DRIVE MAINTENANCE

Final Drive Oil Change

Ride the motorcycle for a few miles to warm up the oil so it will drain quickly and completely. Remove the oil filler cap and drain plug.

WARNING

Do not allow gear oil to contaminate the tire. Unexpected tire slip may cause loss of control.

Rotate the rear wheel to drain any residual oil.

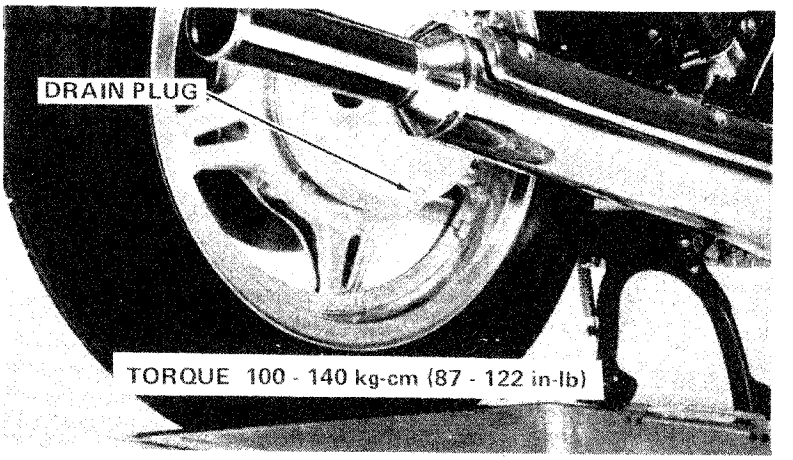

Make sure the washer is in good condition and reinstall the drain plug.

Fill the gear case to the filler neck with clean lubricant of the recommended grade. Reinstall the filler cap securely.

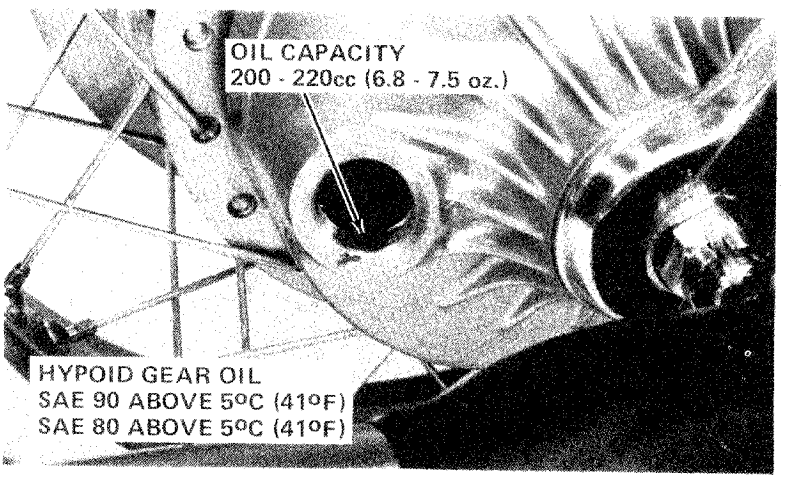

© 1978 American Honda Motor Co., Inc.
Printed in U.S.A. 7-78

13 FRAME AND SUSPENSION

SERVICE INFORMATION	13-2
TROUBLESHOOTING	13-4
SUSPENSION INSPECTION	13-6
SERVICE OPERATIONS	13-7
FRONT FORK	13-8
HANDLEBAR REPLACEMENT	13-12
FORK BRIDGE REMOVAL	13-13
1975-1977 STEM REMOVAL	13-15
1975-1977 BEARING REPLACEMENT	13-16
1978-1979 STEM REMOVAL	13-18
1978-1979 BEARING REPLACEMENT	13-19
REAR SUSPENSION	13-21
SWING ARM INSPECTION	13-23
FUEL TANK REMOVAL	13-26
MAIN STAND REMOVAL	13-28
SIDE STAND INSPECTION AND REPLACEMENT	13-29
FRAME INSPECTION	13-29

© 1978 American Honda Motor Co., Inc.
Printed in U.S.A. 7-78

SERVICE INFORMATION

Specifications

Front fork spring (1975 - 1977)
- Free length: 519mm (20.5 in)
  - Service limit: 495mm (19.5 in)
- Rate: 47 to 53 kg @ 452.3mm (103.6 to 116.9 lb @ 18 in)
  - Service limit: 32.8 kg @ 451.3mm (72.3 lb @ 17.77 in)

Front fork spring (1978 - 1979)
- Free length: 525mm (20.67 in)
  - Service limit: 500mm (19.69 in)
- Rate: 47 to 53 kg @ 458.3mm (103.6 to 116.9 lb @ 18.04 in)
  - Service limit: 32.8 kg @ 457.3mm (72.3 lb @ 18.0 in)

Front fork pipe
- Outside diameter: 36.925 to 36.950mm (1.4537 to 1.4547 in)
  - Service limit: 36.900mm (1.4527 in)

Slider guide bushing
- Inside diameter: 37.065 to 37.104mm (1.4592 to 1.4607 in)
  - Service limit: 37.250mm (1.4665 in)

Rear shock spring (1975 - 1977)
- Free length: 248.6mm (9.7873 in)
  - Service limit: 244mm (9.6062 in)
- Rate: 39.2 kg @ 227.5mm (94 to 106 kg @ 194.8mm)
  - Service limit: 39.2 kg @ 222.9mm (94 kg @ 190.2mm)

Rear shock spring (1978 - 1979)

	A	B
Free length:	68.5mm (2.70 in)	178.2mm (7.02 in)
Service limit:	67.0mm (2.64 in)	174.9mm (6.89 in)
Rate:	39.1kg/58.0mm (40 Plus Minus 2.4kg/57.8mm)	39.1kg/167.6mm (100 Plus Minus 6kg /151mm)
Service limit:	39.1kg/56.8mm (37.6kg/56.6mm)	39.1kg/164.2mm (94kg/148.0mm)

Front fork fluid capacity (Automatic Transmission Fluid)
- After draining: 170 to 183cc (4.7 to 6.1 oz)
- After disassembly: 195 to 205cc (6.6 to 6.9 oz)

Side stand, maximum force to retract: 2 to 3 kg (4-6 lb)

Caster Angle: 62 degrees

Trail length: 120mm (4.7 in)

Telescopic Fork Travel: 143mm (5.6 in)

Torque Values

Engine Mounting Bolts
(See Section 4)

Steering and Suspension
- Front axle holders: 180 to 250 kg-cm (156-216 in-lb)
- Steering stem bolts: 300 to 400 kg-cm (22 to 29 ft-lb)
- Rear swing arm locknut: 100 kg-cm (86 in-lb)

© 1978 American Honda Motor Co., Inc.
Printed in U.S.A. 7 78

FRAME AND SUSPENSION

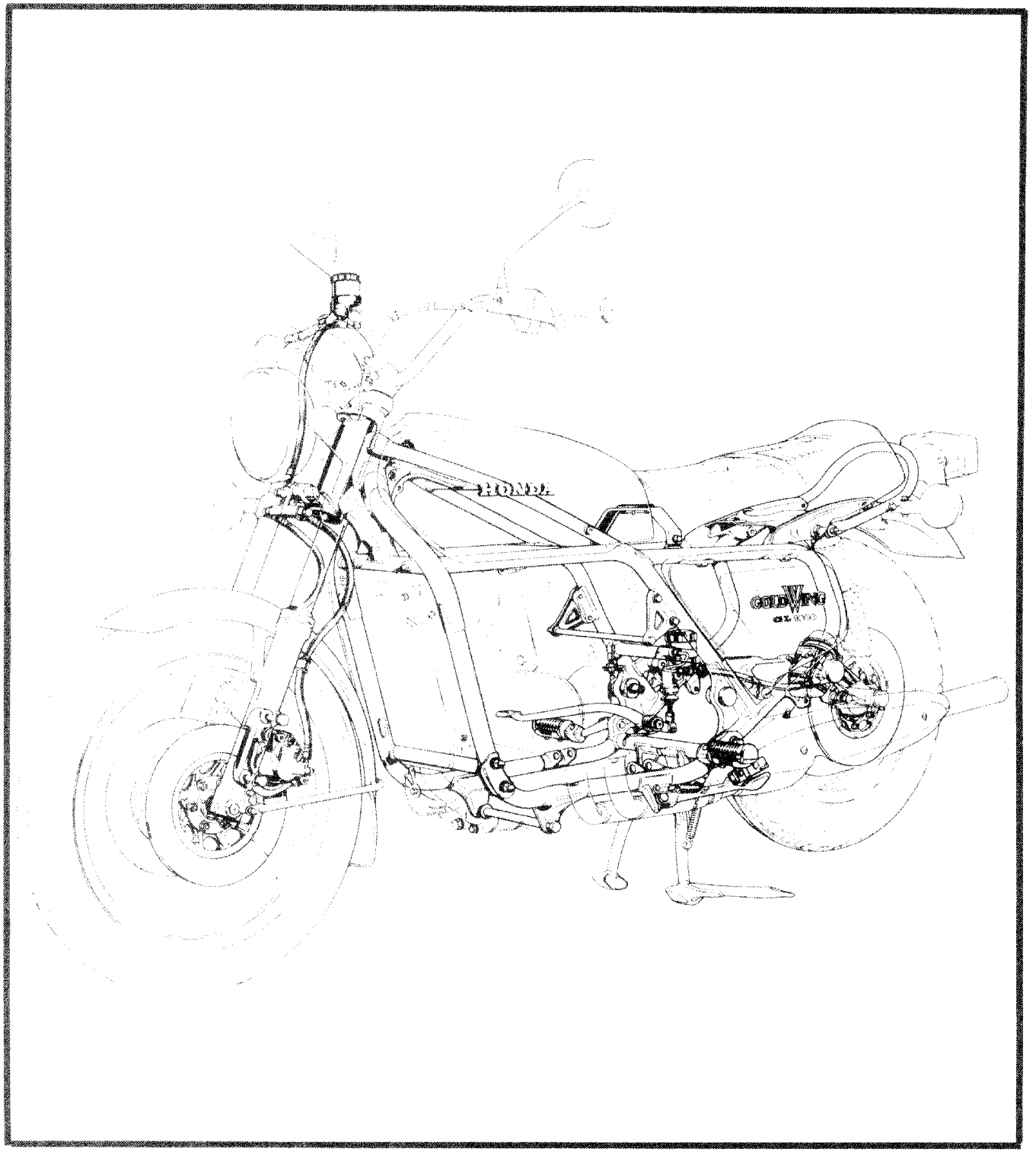

© 1976 American Honda Motor Co., Inc.
Printed in U.S.A. 7-78

Working Practice

If the motorcycle has been involved in an accident, the frame should be inspected very carefully at the steering head and at the engine mounts, as these are the areas that are most likely to suffer damage.

Always **replace** bent handlebars and fork legs; straightening them will weaken the material.

Tools and Materials

Ball race driver HC 41323
6mm hollow set wrench
Oil seal remover HC 41326
Oil seal driver HC 41324
36mm Pin spanner HC 06155
48mm Pin spanner HC 06152
Rear shock compressor HC 29827
Inside micrometer
Outside micrometer
Torque wrench 0-25 kg-m (0-150 ft-lb)
Torque wrench 0-350 kg-cm (0-300 in-lb)
Spring pull scale - grams-ounces
Snap ring pliers
Vernier calipers HC 20657
Multipurpose grease NLGI-2
Automatic transmission fluid
Bearing remover HC 41319
Pivot nut remover HC 41315
Bearing remover weight HC 41312
Bearing remover handle HC 41311
Steering stem socket HC 64765

TROUBLESHOOTING

Wobble or Vibration in Motorcycle

1. Loose axle (front or rear)
2. Loose wheel bearings
3. Loose steering stem nut or bearings
4. Loose lock nut(s) on rear suspension pivot bolt(s)
5. Unbalanced tire and wheel
6. Loose spokes
7. Bent wheel
8. Excessive lateral runout in wheel
9. Bent forks
10. Bent rear swing arm
11. Bent or cracked frame
12. Loose engine mounts

© 1978 American Honda Motor Co., Inc.
Printed in U.S.A. 7-78

FRAME AND SUSPENSION TROUBLESHOOTING

Hard Steering

1. Low tire pressure
2. Steering stem nut too tight
3. Defective steering stem bearings
4. Insufficient lubrication in steering stem bearings
5. Steering stem bent

Steers to One Side or Does Not Track Straight

1. Bent forks
2. Bent frame
3. Forks installed in triple crown incorrectly
4. Axle installed incorrectly
5. Bent swing arm
6. Wheel installed incorrectly

Hard Suspension

1. Incorrect weight fluid in front forks
2. Clogged fork hydraulic passages
3. Fork sliders binding on fork legs
4. Rear swing arm binding
5. Rear shock rods bent or binding
6. Defective rear shocks

Soft Suspension

1. Incorrect weight fluid in front forks
2. Too much clearance inside forks
3. Broken fork spring(s)
4. Broken rear spring(s)
5. Defective rear shocks

Suspension Noise

1. Incorrect fluid level in forks
2. Broken parts in forks
3. Steering stem nut too loose
4. Loose axle (front or rear)
5. Defective rear shocks or springs
6. Swing arm binding

Front Forks Leaking

1. Defective fork seals
2. Too much fluid in forks
3. Incorrect weight fluid in forks
4. Too much clearance between seals and fork legs

© 1976 American Honda Motor Co., Inc.
Printed in U.S.A. 7-78

SUSPENSION INSPECTION

WARNING

Do not ride a vehicle with faulty suspension. Loose, worn or damaged suspension components may impair vehicle stability, safety and rider control.

Check front fork action by locking the front brake and compressing the forks several times. The suspension should function smoothly, with no oil leakage. Inspect the entire fork assembly for signs of damage. Tighten all bolts to specifications.

To check the rear suspension place the motorcycle on its center stand. Vigorously push and pull on the side of the rear wheel. There should be no free play or looseness. Check the entire suspension assembly for damage, distortion or leakage. Tighten all bolts to specifications.

To check the steering head bearings, raise the front wheel off the ground using a jack under the engine. While holding the fork sliders check that the front wheel turns from full left to full right freely. Push and pull on the sliders and check that there is no free play or looseness.

NOTE
Check that the control cables are routed correctly and do not interfere with steering.

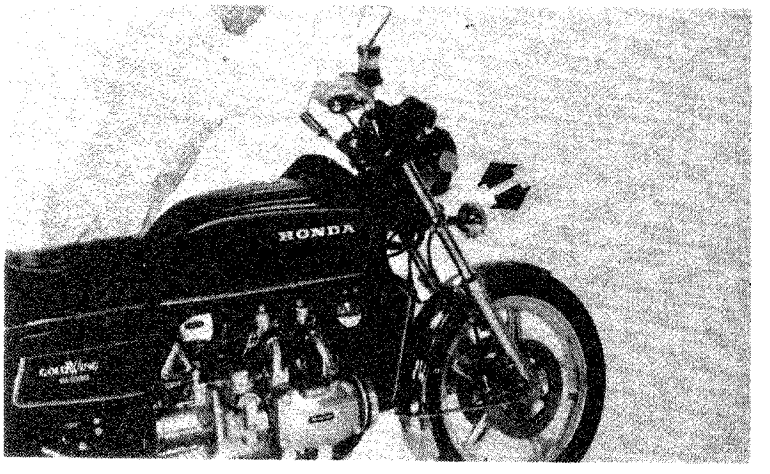

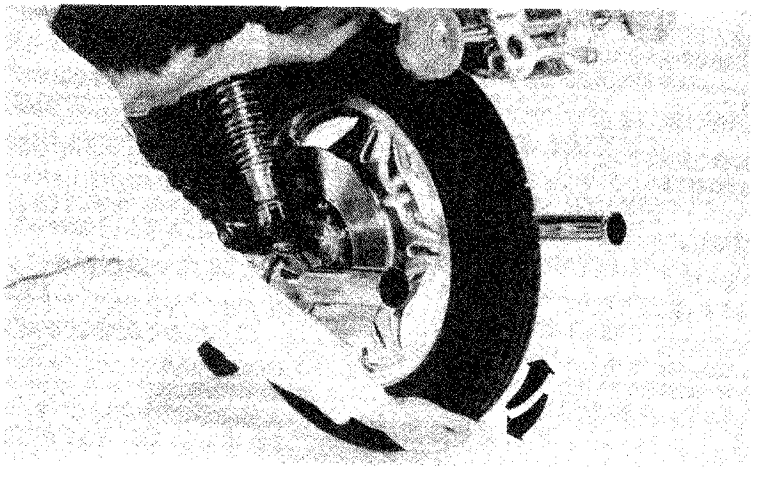

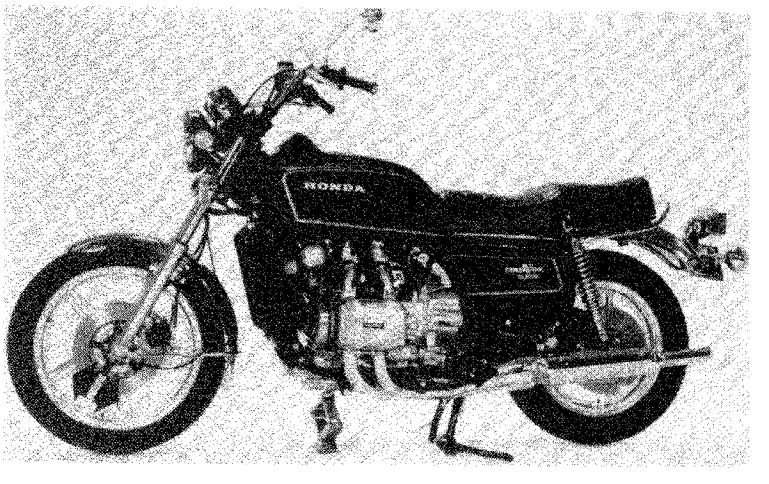

© 1978 American Honda Motor Co., Inc.
Printed in U.S.A. 7-78

SERVICE OPERATIONS

Changing Fork Oil

Remove the fork cap and filler plug. Place a pan below the fork, remove the drain plug, and allow the fork to drain.

Work the suspension up and down to completely drain the fork.

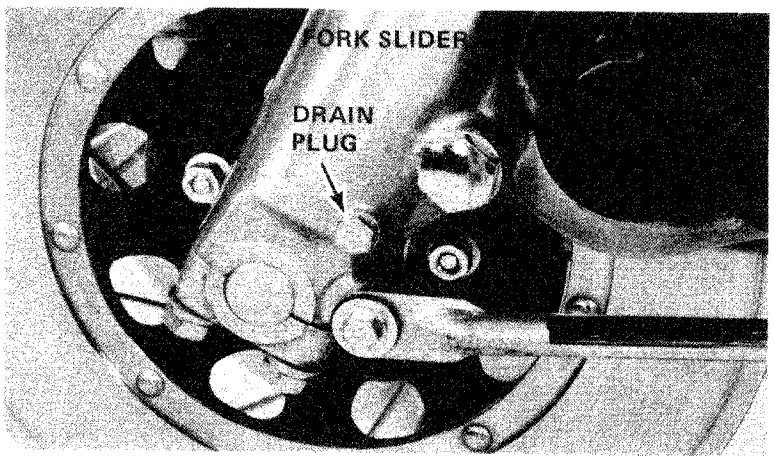

Replace the drain plug.

Refill the fork and replace the filler plug and fork cap.

Repeat this operation for the remaining fork leg.

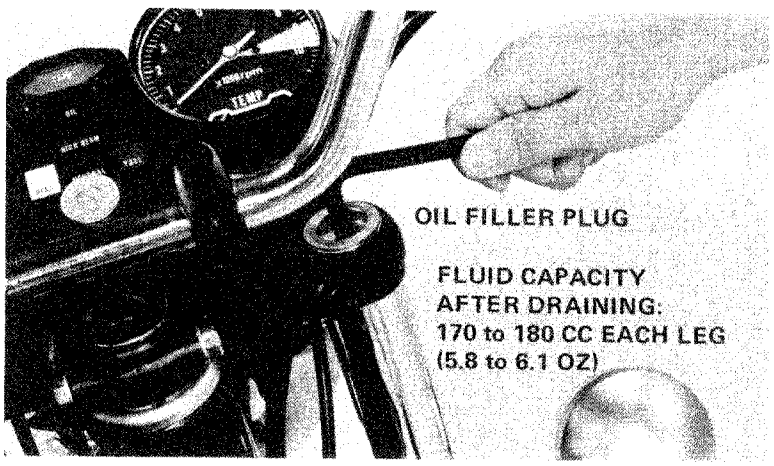

© 1978 American Honda Motor Co., Inc.
Printed in U.S.A. 7-78

FRONT FORK DISASSEMBLY

To remove and service both fork legs, remove the right and left side brake caliper bolts, speedometer cable, and axle holder nuts.

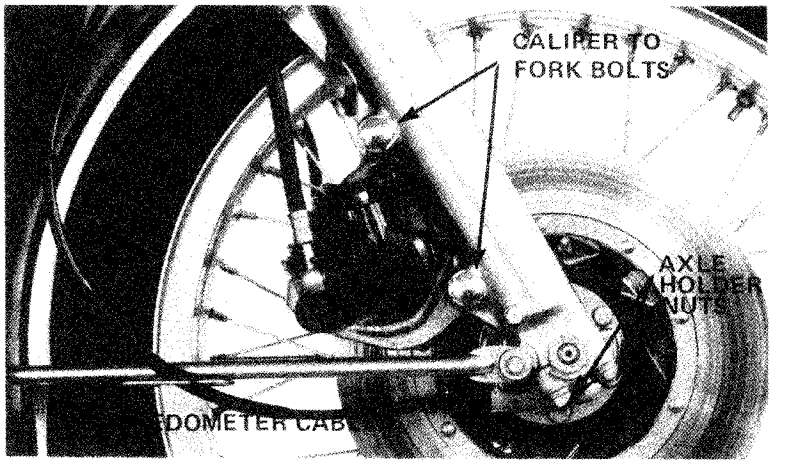

Remove the right and left side front axle holders.

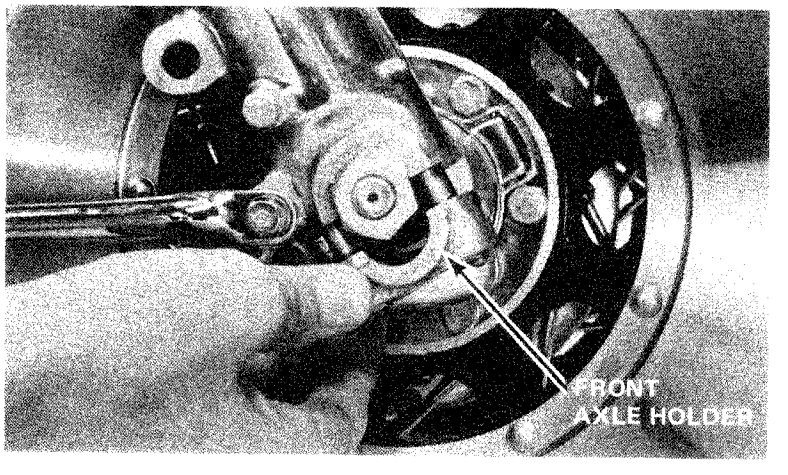

Jack up the engine until the fork legs clear the front axle and remove the front wheel.

Remove the right and left fender attaching bolts and both brake hose clamps.

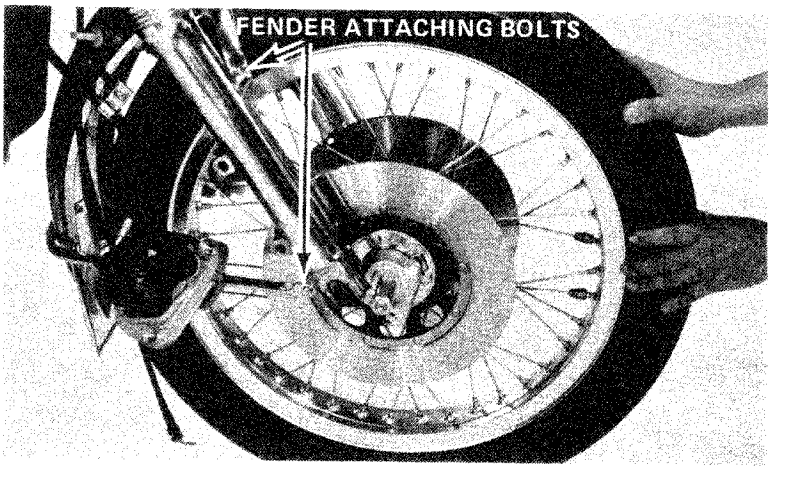

© 1978 American Honda Motor Co., Inc.
Printed in U.S.A. 7-78

Loosen the top and bottom fork pinch bolts.

Remove the fork assembly.

NOTE

If the fork has been removed due to accident damage, the stem and crown should be checked for alignment and the bearings for damage.

Remove the oil filler plugs and drain the fork legs.

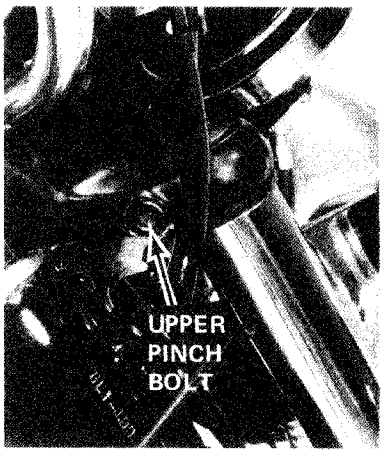

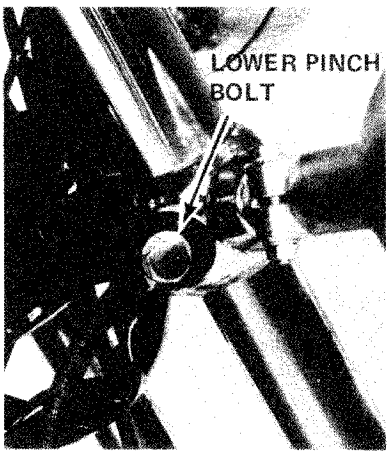

Pour out any remaining fork fluid and mount the fork leg in a vise. Remove the bottom socket bolt.

Disassemble the fork components as shown on page 13-9.

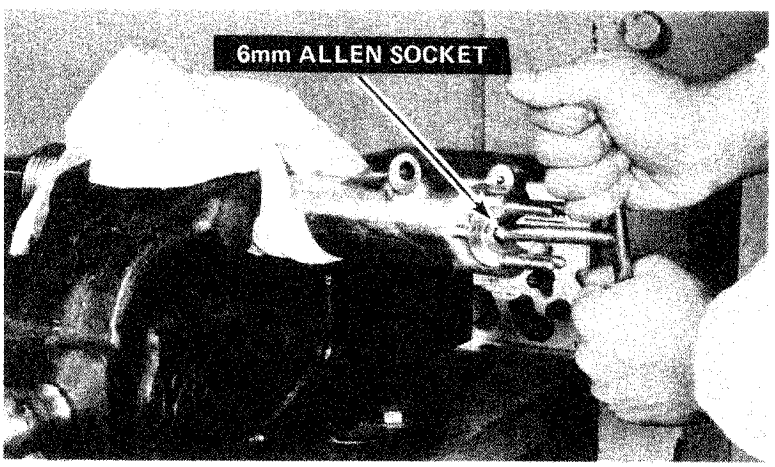

Inspection

Check the free length of the fork spring. Replace it if it does not meet specification.

NOTE

The tightly wound portion of the spring must be positioned toward the top of the fork.

FREE LENGTH

STANDARD: 519mm (20.4 in)
SERVICE LIMIT: 495mm (19.5 in)

TOP BOTTOM

© 1976 American Honda Motor Co., Inc.
Printed in U.S.A. 7-78

Remove the fork seal. Measure the inside diameter of the guide bushing.

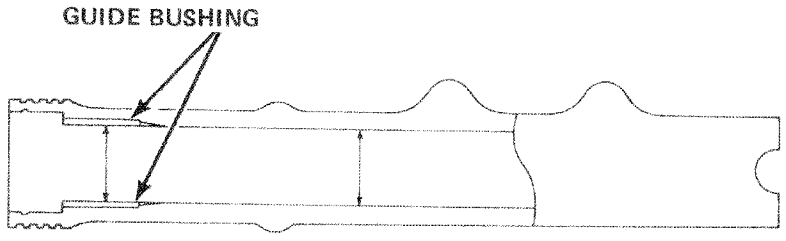

Measure the outside diameter of the fork pipe and check the condition of the bottom pipe piston ring.

Reassembly

Reassemble the fork in the reverse order of disassembly.

NOTE

Apply liquid sealant to the threads of the bottom socket bolt.

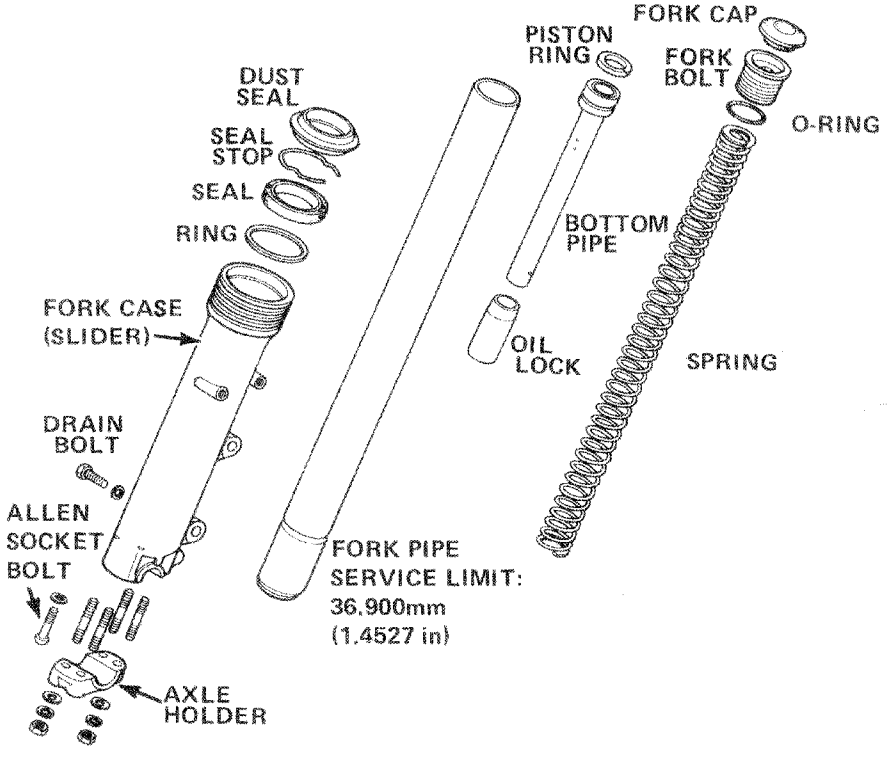

Dip the new fork seal in ATF and install it in the slider using the fork leg as a guide for the tool.

Install the fork leg(s) into the stem and crown. Tighten the upper and lower pinch bolts securely.

Fill the forks with good quality ATF.

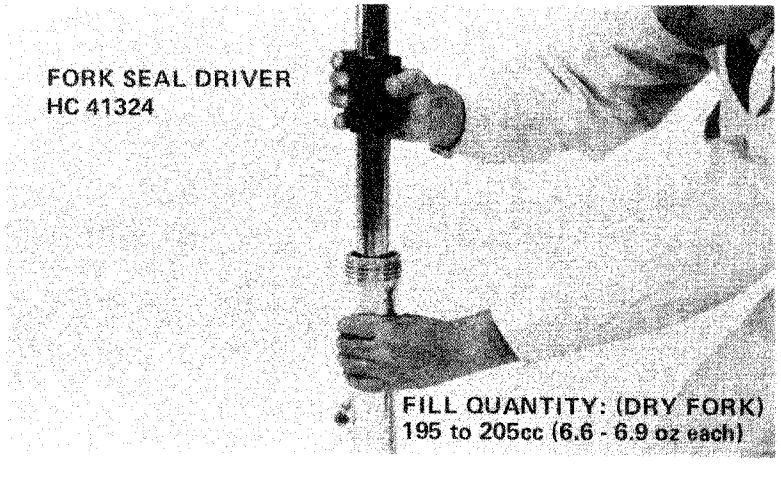

© 1978 American Honda Motor Co., Inc.
Printed in U.S.A. 7-78

Install the front fender and position the front wheel between the fork legs. Make sure that the lug on the speedometer gearbox rests against the rear of the lug on the right fork leg. Lower the forks so the hollow in the fork legs rests on the top of the axle.

Install the axle holders with the "F" arrow forward. Tighten the forward axle holder nuts lightly.

Fit the calipers over the discs, taking care not to damage the brake pads. Install the caliper mounting bolts.

Tighten the right axle holder nuts (speedometer side) to the specified torque, starting with the forward nuts.

Measure the clearance between the left brake disc and the rear of the left caliper holder with a feeler gauge.

If the gauge cannot be inserted, pull the left fork outward until the gauge can be inserted. Tighten the forward axle holder nuts to the specified torque, then torque the rear nuts and remove the feeler gauge.

Check the other three corners of the left caliper holder for clearance.

WARNING

After installing the wheel, apply the brakes several times and recheck the clearance on both discs. Failure to provide clearance will damage the brake discs and affect braking efficiency.

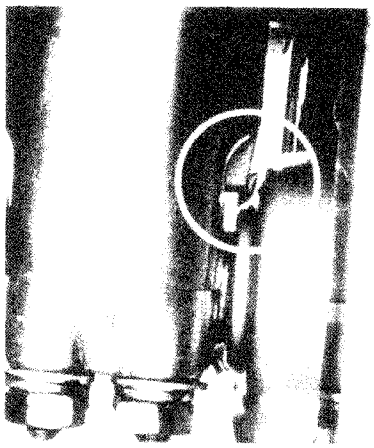

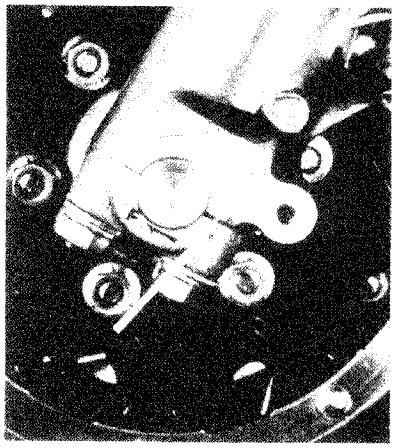

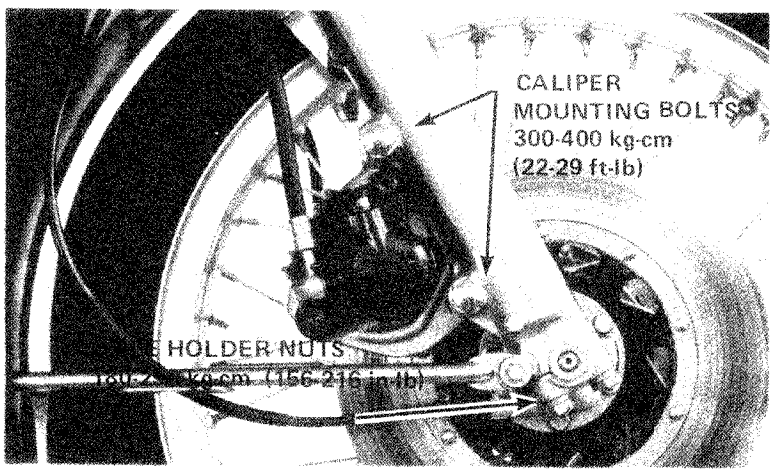

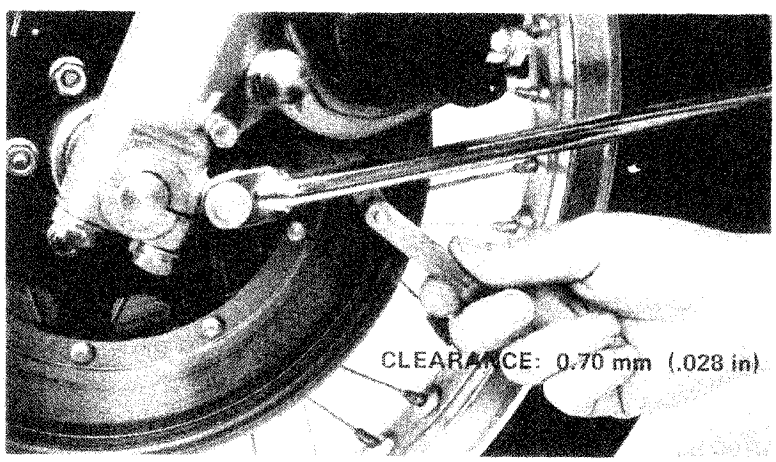

HANDLE BAR REPLACEMENT

Remove the front brake master cylinder.

CAUTION

Secure the brake cylinder in an upright position to prevent the fluid from leaking and damaging the paint and to prevent air from entering the brake system.

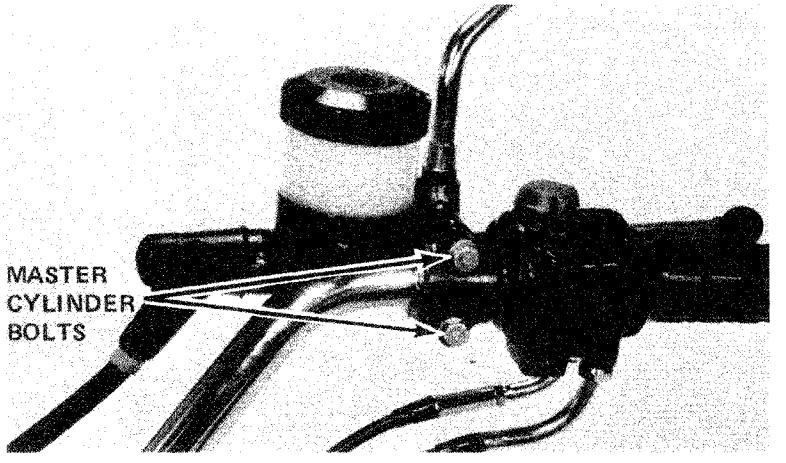

Disassemble the right hand switch and remove the cables from the throttle pipe.

Unscrew the cable guides from the lower half of the switch.

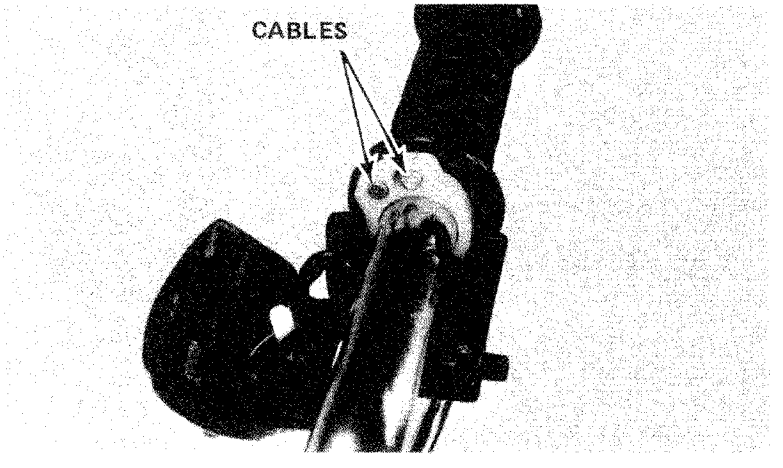

Open the left side cover and disconnect the wires for the handlebar switches.

Remove the clutch cable and starter safety switch.

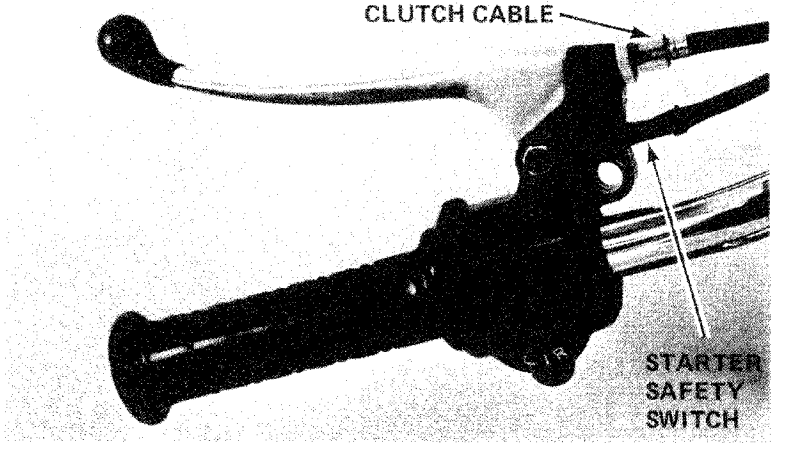

© 1976 American Honda Motor Co., Inc.
Printed in U.S.A. 7-78

FRAME AND SUSPENSION
HANDLE BAR REPLACEMENT

Remove the 4 indicator light cover retaining screws and the light cover.

Pull the handle bar switch wires clear.

Remove the clamp bolts and lift the bar free of the crown.

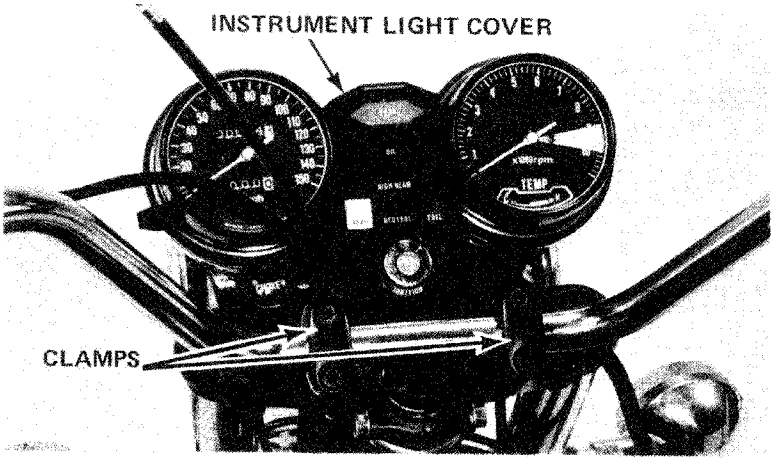

Pull the switch wiring thru the handlebar.

NOTE

Attach a wire to the ends of the switch loom and pull it through the handlebar. Use this wire to pull the new switch wiring back through the handlebar.

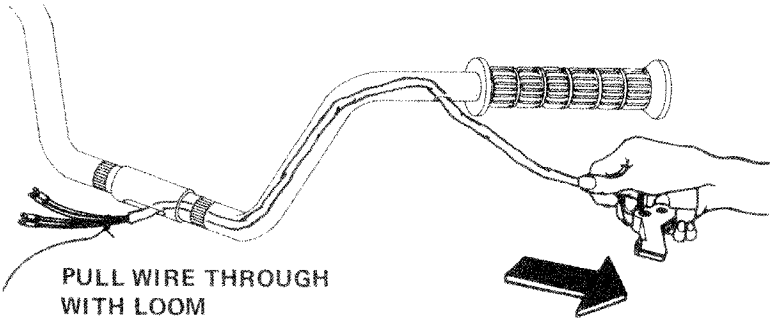

FORK BRIDGE REMOVAL

Disconnect the tachometer and speedometer cables from the instruments. Remove the two retaining nuts and lift the plate, instruments, and light panel off as an assembly.

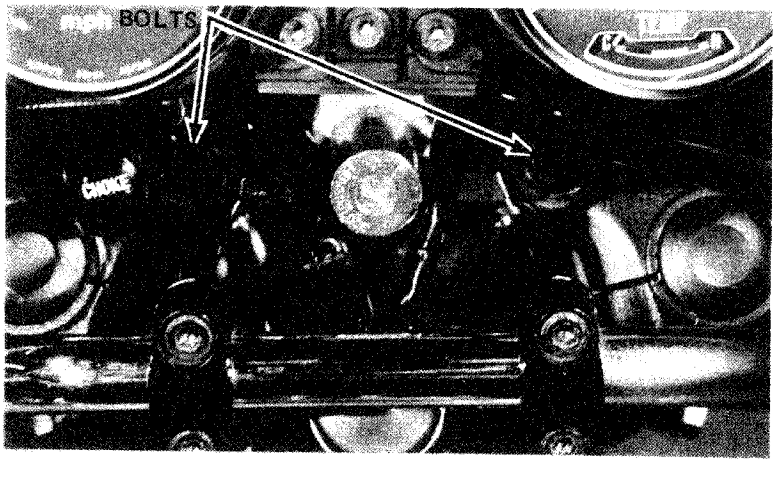

© 1976 American Honda Motor Co., Inc.
Printed in U.S.A. 7-78

Remove the 2 ignition mounting bolts and ignition switch.

Remove the handlebars.

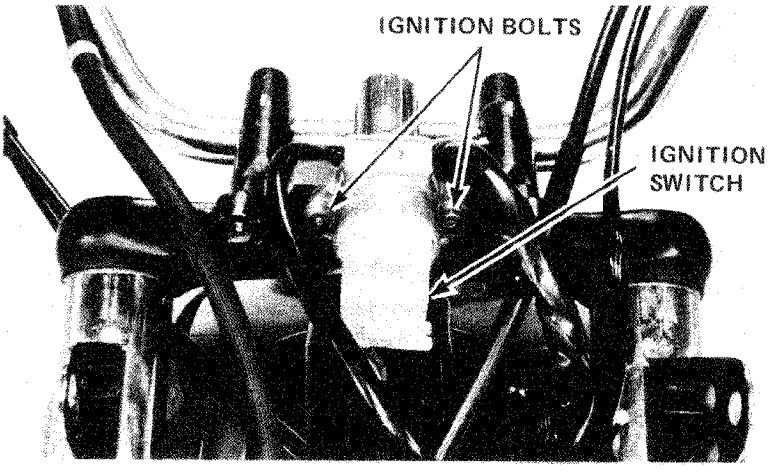

Loosen the pinch bolts, stem clamp bolt, and remove the steering stem cap.

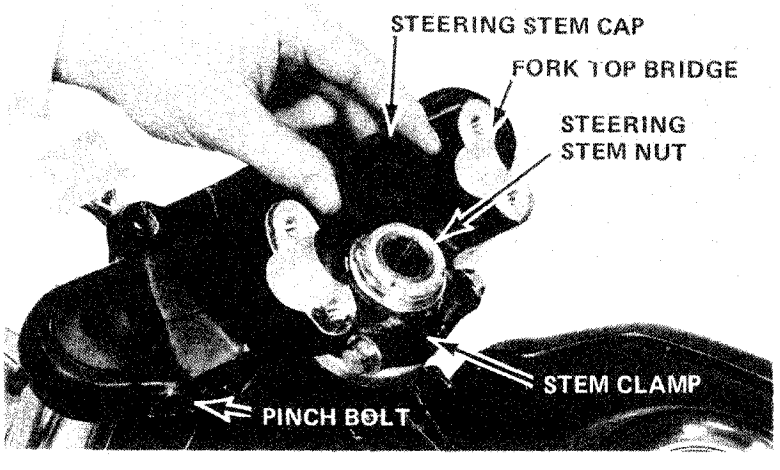

Jack up the engine until the front wheel is off the ground.

Remove the steering stem nut and washer and lift the fork bridge clear of the stem and fork tubes.

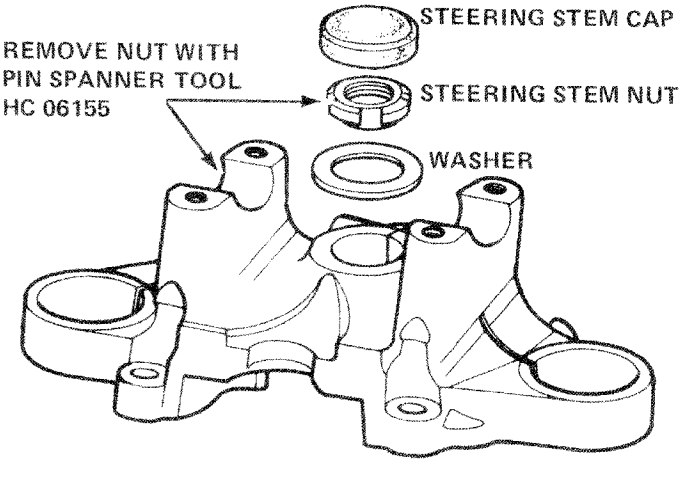

GL-1000 SHOP MANUAL
© 1976 American Honda Motor Co., Inc.
Printed in U.S.A. 7-78

1975-1977 STEM REMOVAL

Remove the 4-way joint assembly.

Remove the headlamp assembly and disconnect the internal wiring.

Remove the wheel and forks.

NOTE

For wheel and fork removal procedure see page 13-8.

Remove the headlamp shell and fork covers as a unit.

Remove the steering head top nut.

Support the stem to prevent it from falling and remove the upper cone race and ball bearings.

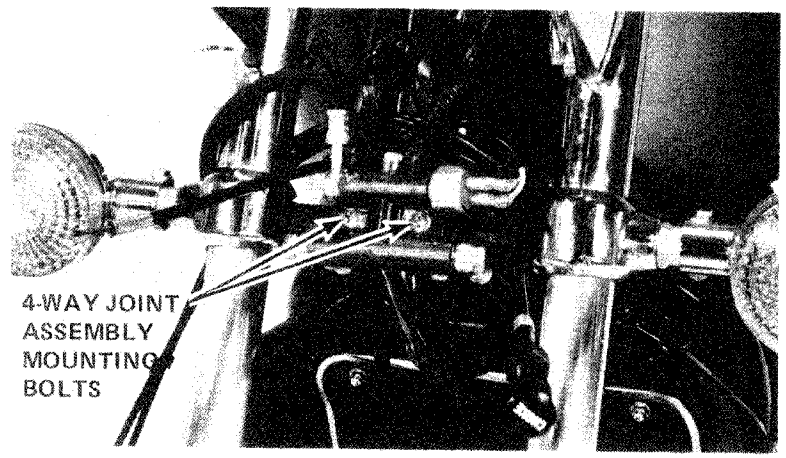

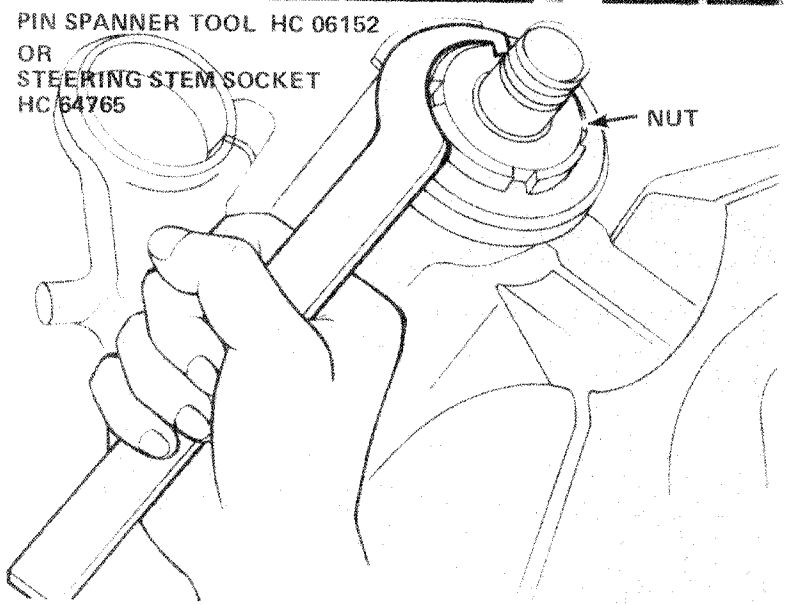

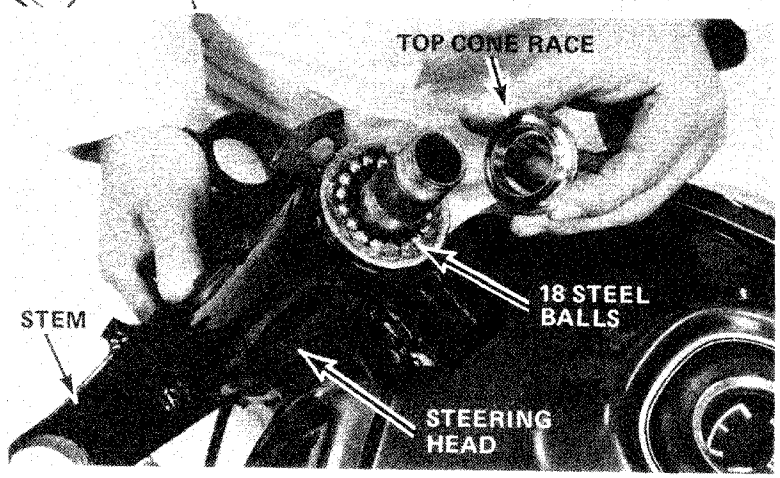

© 1978 American Honda Motor Co., Inc.
Printed in U.S.A. 7-78

Lower the stem carefully to prevent the lower bearings from falling. Remove the balls, inspect the races for damage.

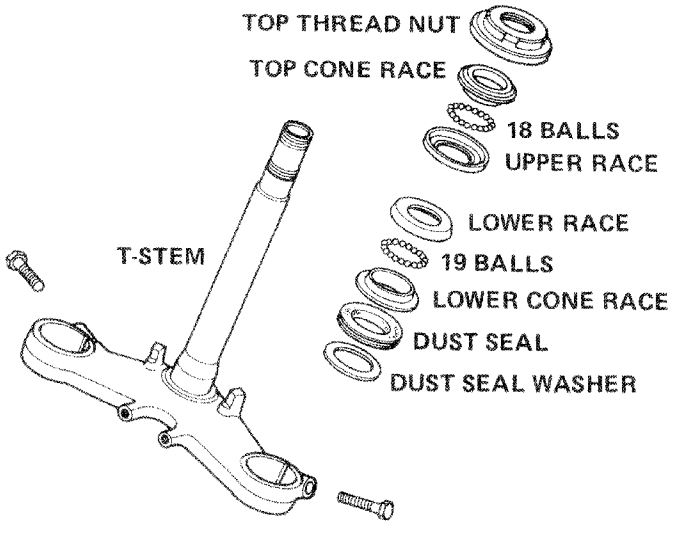

1975-1977 BEARING REPLACEMENT

Remove the upper head race.

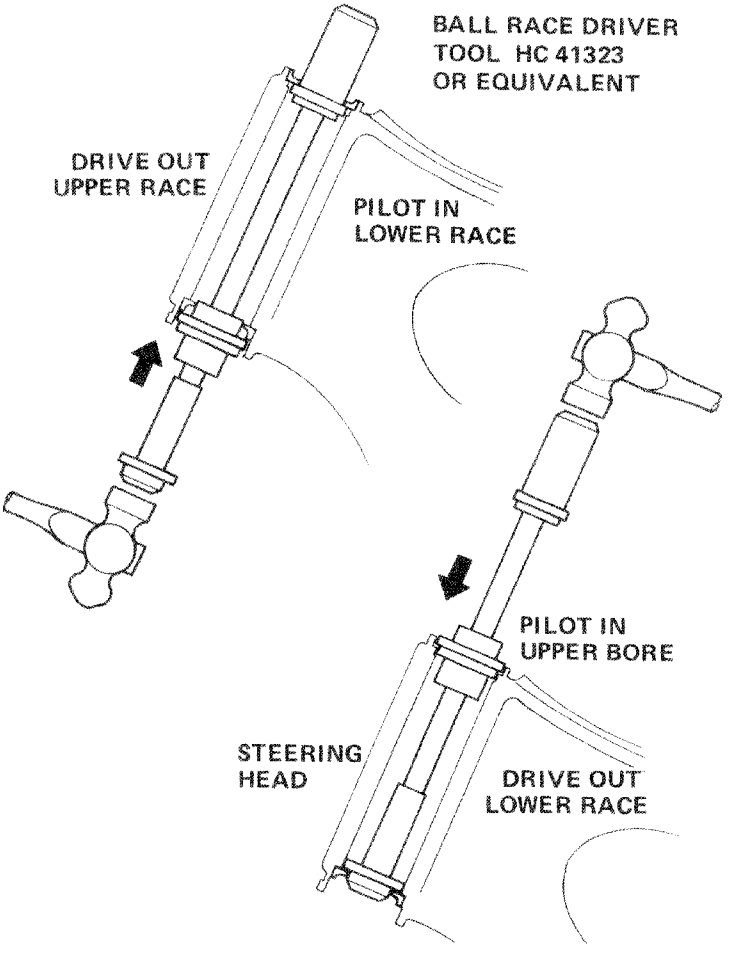

Remove the lower head race.

NOTE

If the motorcycle has been involved in an accident, examine the area around the steering head for cracks.

© 1978 American Honda Motor Co., Inc.
Printed in U.S.A. 7-78

FRAME AND SUSPENSION BEARING REPLACEMENT

Install the new upper race.

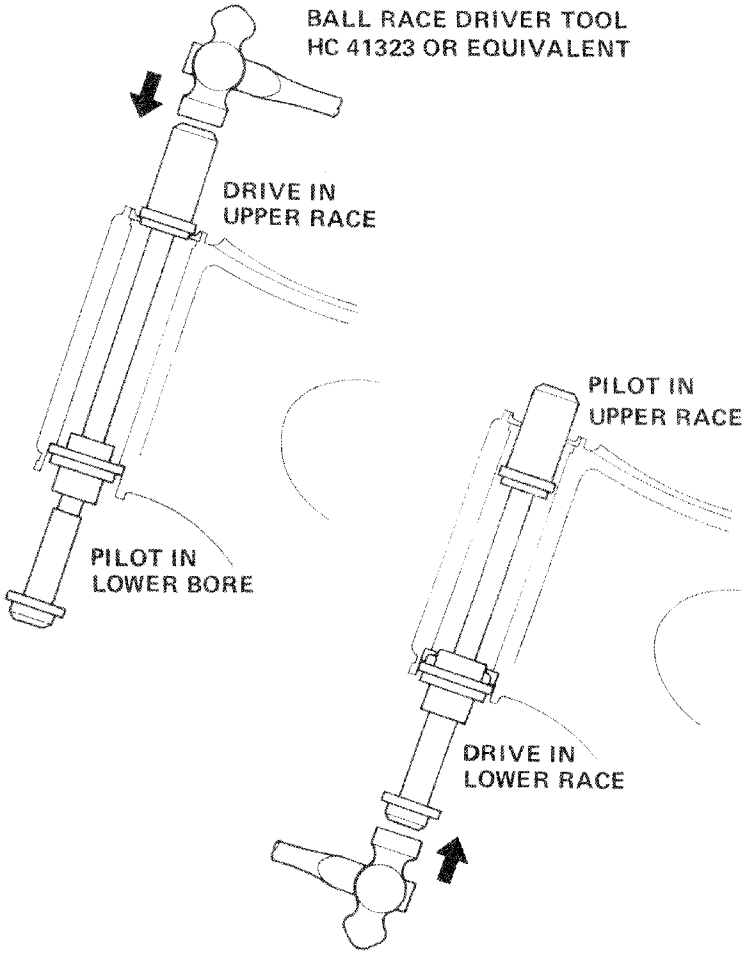

Install the new lower race.

Stem Installation

Assemble the stem with the dust seal washer, dust seal and lower cone race.

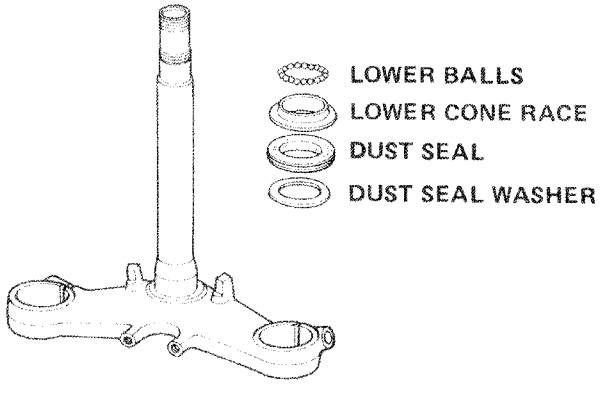

© 1976 American Honda Motor Co., Inc.
Printed in U.S.A. 7-78

Grease the top race and install the 18 ball bearings. Grease the lower cone race and install the 19 ball bearings on the race.

Install the stem in the frame neck. Tighten the nut until there is no vertical movement and the stem rotates freely.

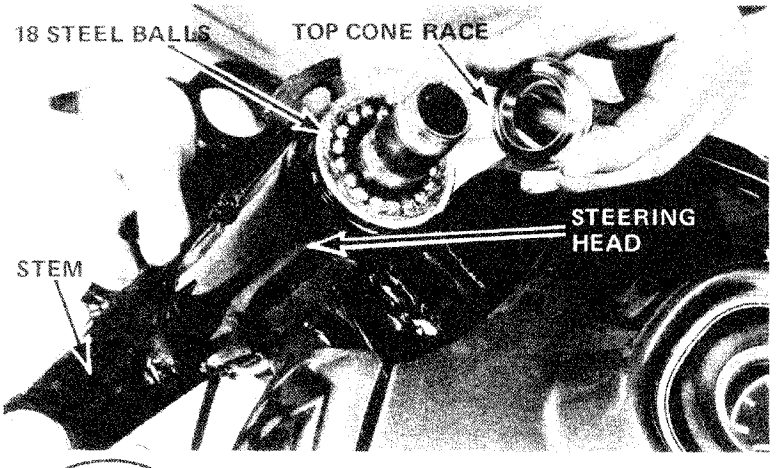

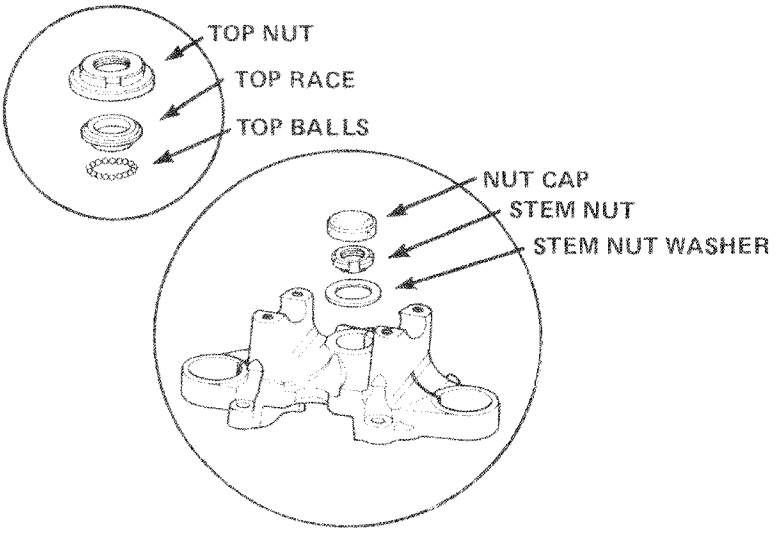

Install the bridge and stem nut, install the forks, wheel, headlight, and handle bars.

1978-1979 STEM REMOVAL

Remove the 4-way joint assembly.

Remove the headlamp assembly and disconnect the internal wiring.

Remove the wheel and forks.

NOTE

FOR wheel and fork removal procedure see page 13-8.

Remove the headlamp shell and fork covers as a unit.

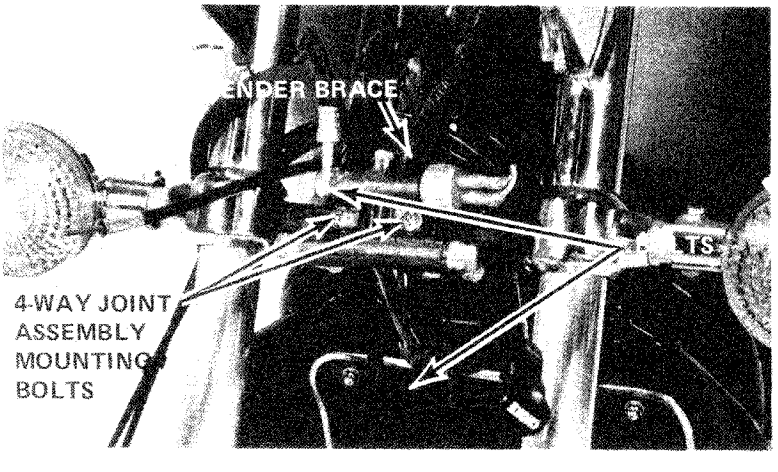

GL-1000 SHOP MANUAL
© 1978 American Honda Motor Co., Inc.
Printed in U.S.A. 7-78

Remove the nut from the top of the steering stem, and remove the steering stem from the frame.

Remove the upper bearing and grease holder.

Remove the lower bearing and dust seal from the steering stem.

PIN SPANNER TOOL HC 06152

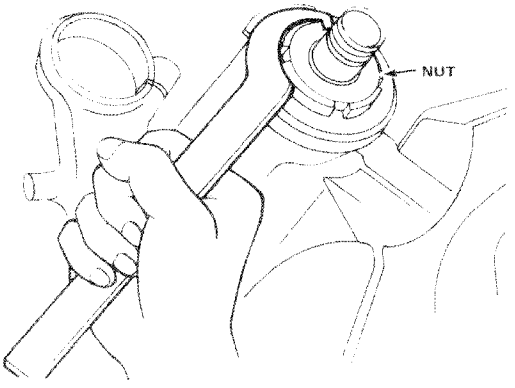

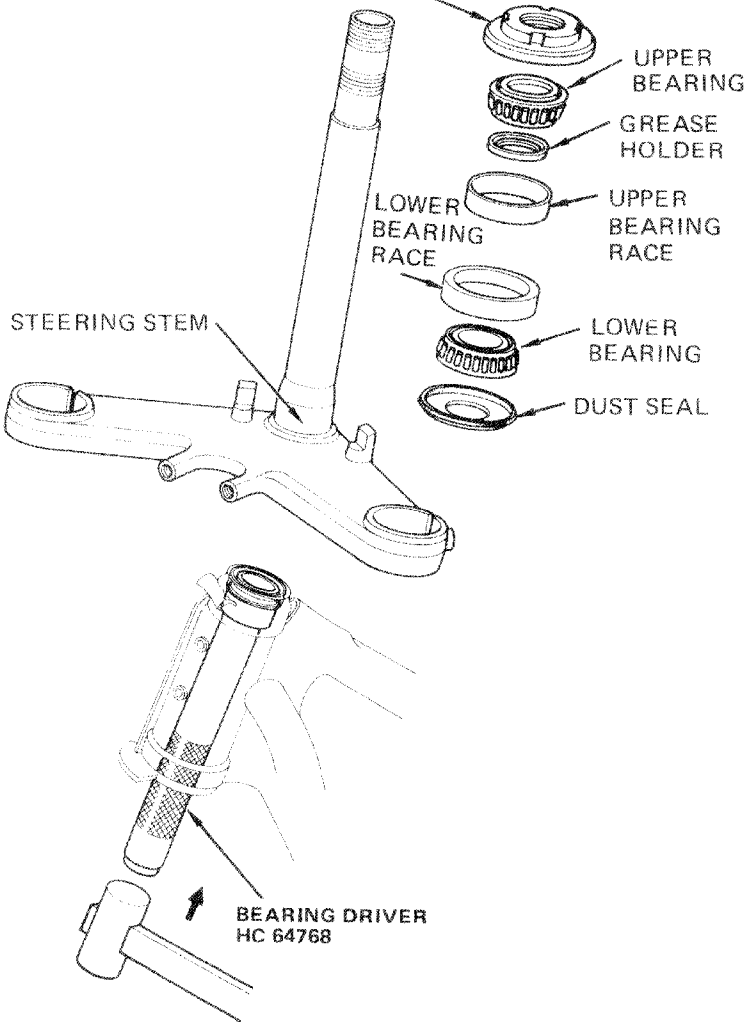

1978-1979 BEARING REPLACEMENT

CAUTION

Steering head bearings and races are supplied in matched sets to ensure a precision fit. Remove and install complete sets; do not mix replacement bearings or races with original parts.

Remove the upper bearing outer race, using bearing driver HC 64768.

© 1978 American Honda Motor Co., Inc.
Printed in U.S.A. 7-78

Remove the lower bearing outer race, using bearing driver HC 64768 and race removal tool HC 64766.

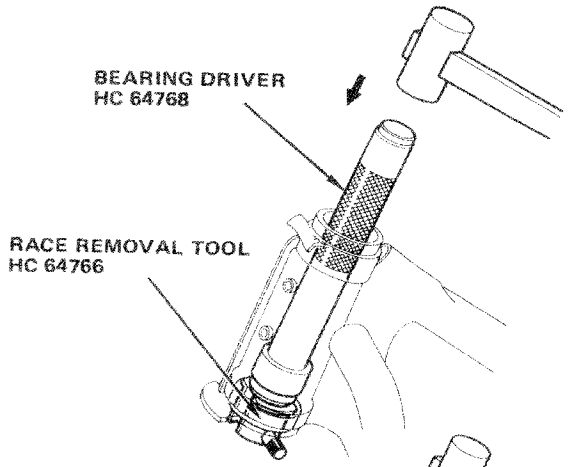

NOTE

If steering head bearings are being replaced due to collision damage, inspect the steering head for possible cracks, deformation, or misalignment before installing replacement bearings.

Install the upper bearing outer race, using bearing driver HC 29824 and race installation attachment HC 64767.

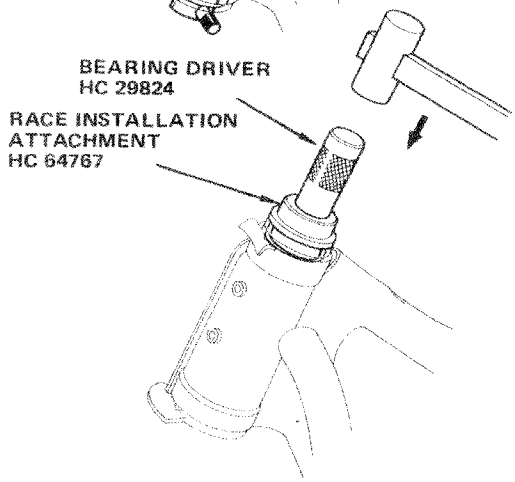

Install the lower bearing outer race, using bearing driver HC 29824 and race installation attachment HC 64767.

Place the dust seal on the steering stem. Install the lower bearing and inner race, using bearing driver HC 64768.

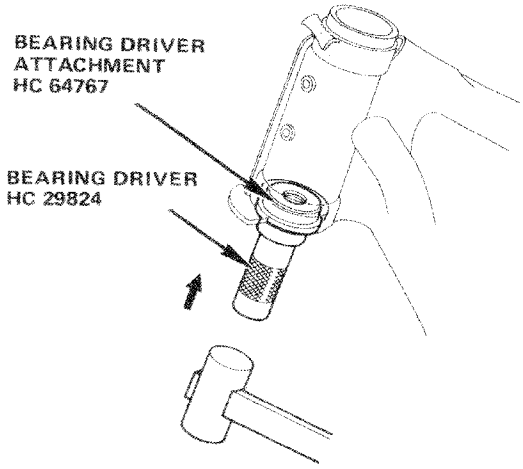

© 1978 American Honda Motor Co., Inc.
Printed in U.S.A. 7-78

Pack the lower bearing with grease and insert the steering stem into the frame's steering head. Pack the upper bearing with grease, and install the grease holder and upper bearing on the steering stem.

Install the steering stem bearing nut and tighten it initially to a torque value of 3-4 kg-m (22-28 lbs. ft.) to seat the bearings. Then loosen the nut and retighten it to a final torque value of 1.5-1.7 kg-m (11-13 lbs. ft.).

Reinstall the fork bridge, forks, wheel, headlight, and handlebars.

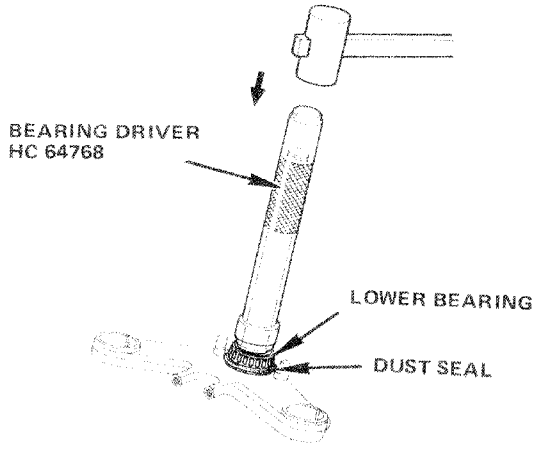

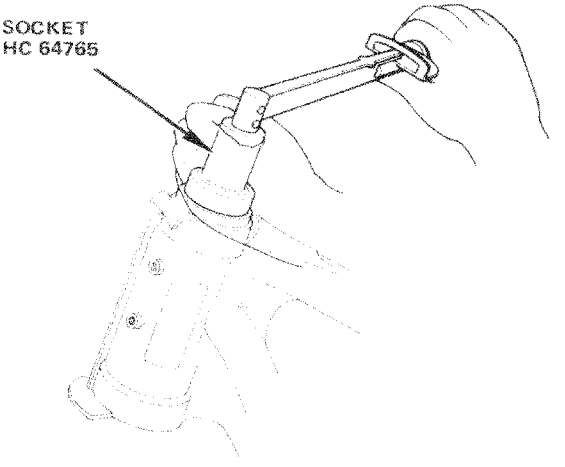

REAR SUSPENSION

Remove the upper and lower shock absorber mounting bolts and remove the shock absorbers.

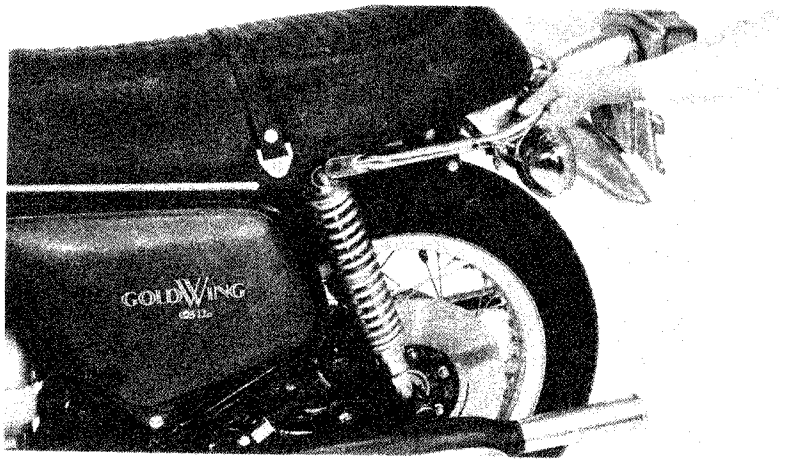

© 1978 American Honda Motor Co., Inc.
Printed in U.S.A. 7-78

Compress the spring. Loosen the eye lock nut and remove the eye.

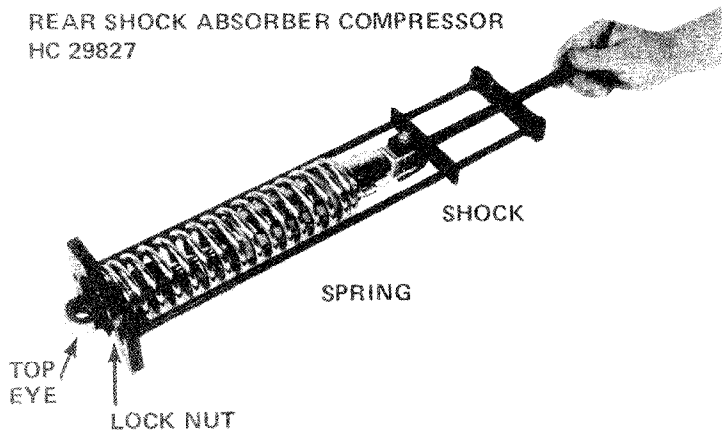

Disassemble the unit. Measure the free length of the spring. Inspect the shock body for evidence of oil leaks.

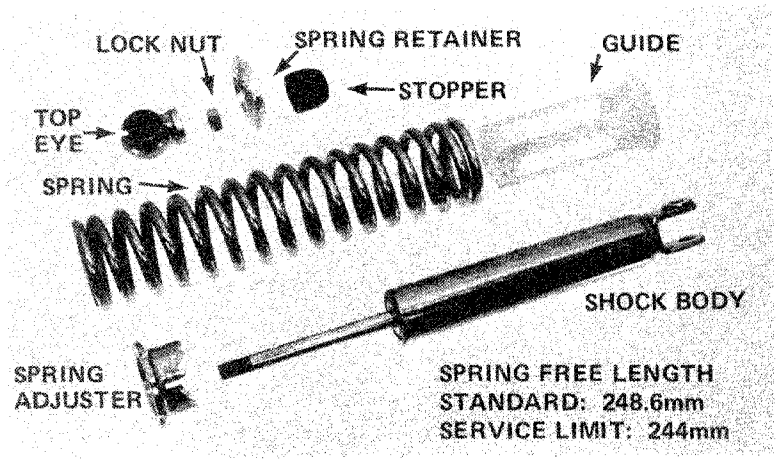

REAR WHEEL REMOVAL

Remove the rear wheel and swing arm as described in section 12.

© 1976 American Honda Motor Co., Inc.
Printed in U.S.A. 7-78

SWING ARM INSPECTION

Remove the dust cover, pivot collar and the thrust bushing.

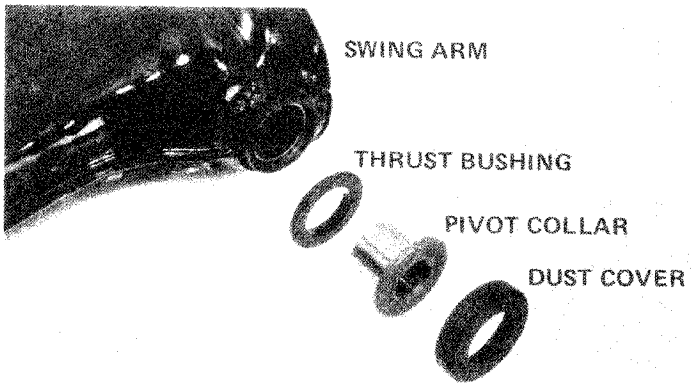

Inspect the needle bearings.

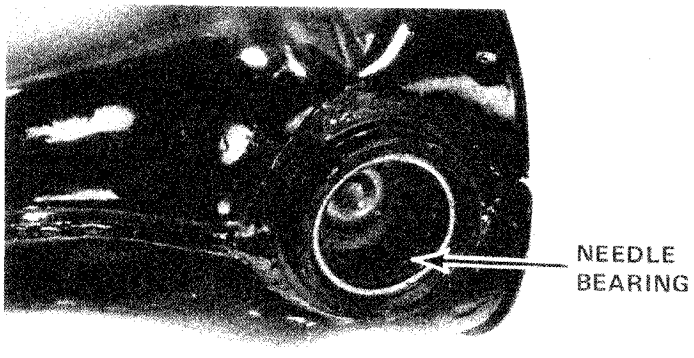

If the bearings are damaged, remove them from the opposite side.

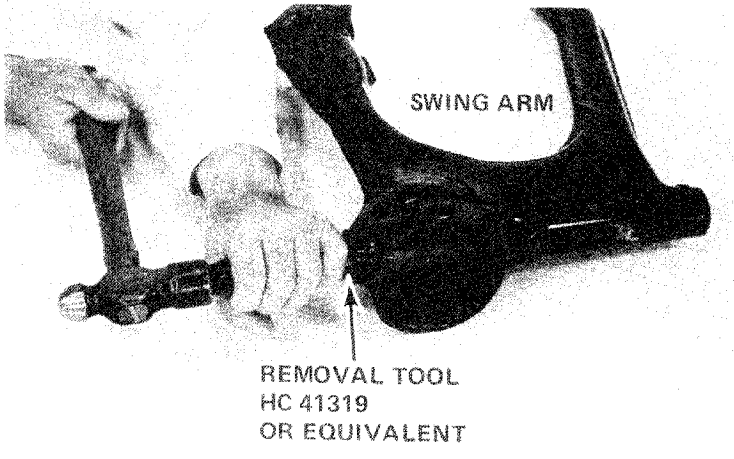

© 1976 American Honda Motor Co., Inc.
Printed in U.S.A. 7 78

Install a new bearing.

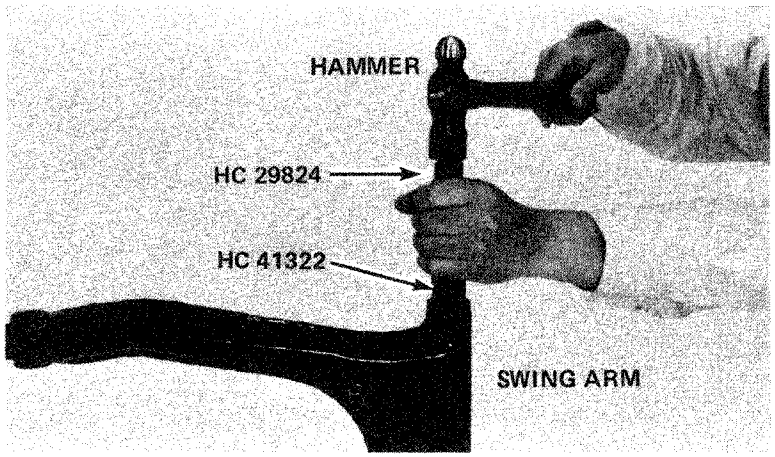

Inspect the condition of the swing arm pivot nut located at the swing arm attaching point. Replace if damaged.

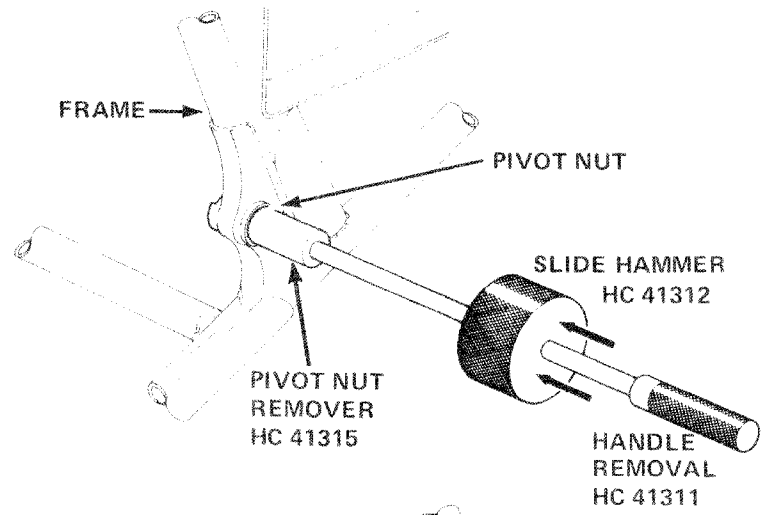

When installing a new pivot nut, be certain the flat side of the nut is aligned with the indentations in the frame.

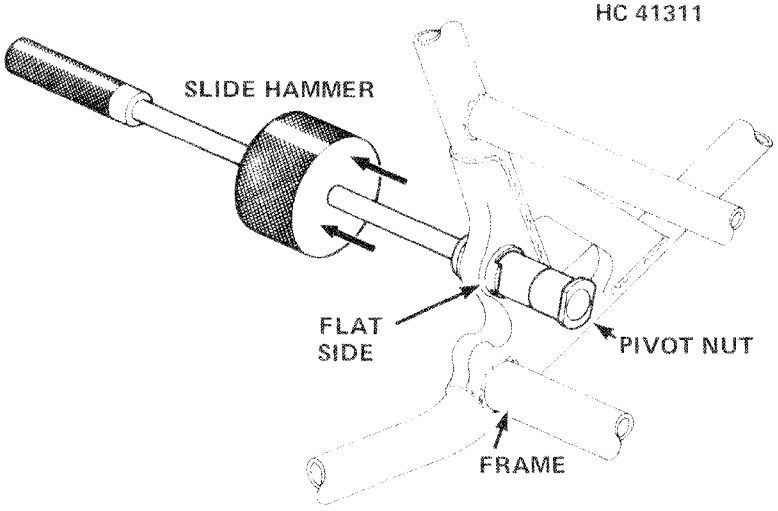

© 1976 American Honda Motor Co., Inc.
Printed in U.S.A. 7-78

FRAME AND SUSPENSION
SWING ARM INSPECTION

Lubricate the needle bearing, pivot collar and bolt.

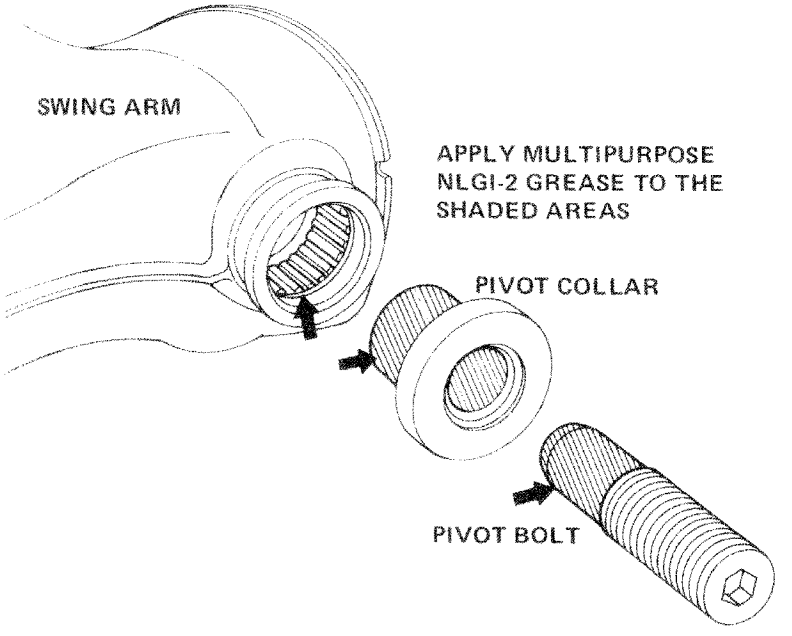

For installation of the drive shaft, rear coupling, and swing arm, see section 12.

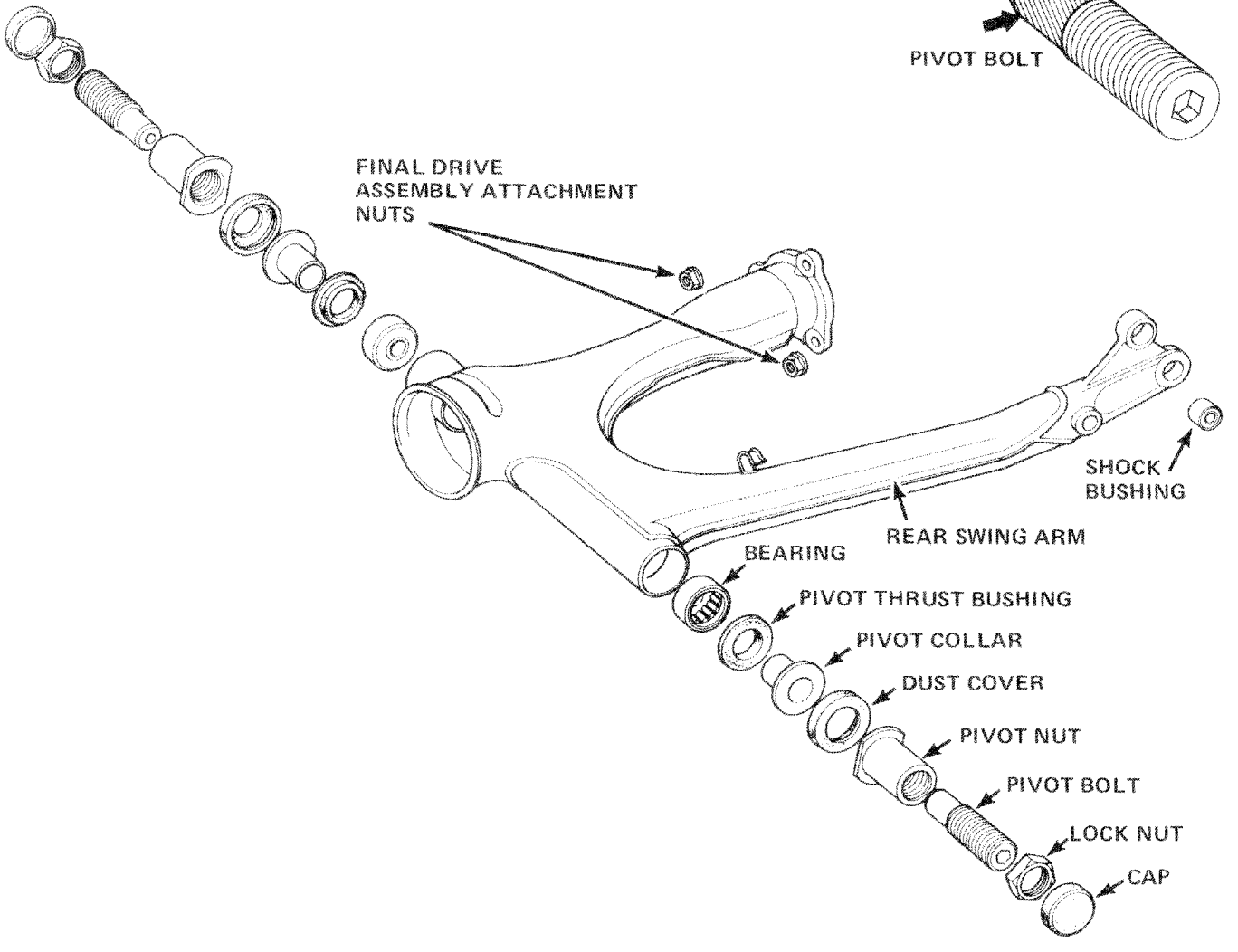

© 1976 American Honda Motor Co., Inc.
Printed in U.S.A. 7-78

FUEL TANK REMOVAL

Remove the right side cover.

Remove the rear master cylinder securing bolts and the brake pedal rod eye pin.

Move the master cylinder away from the fuel tank without disconnecting the brake line.

Remove the fuel tank drain plug and drain the fuel.

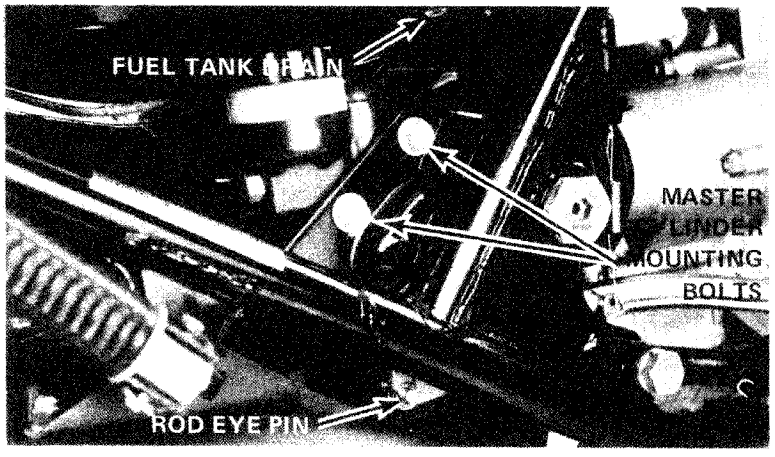

Remove the fuel petcock.

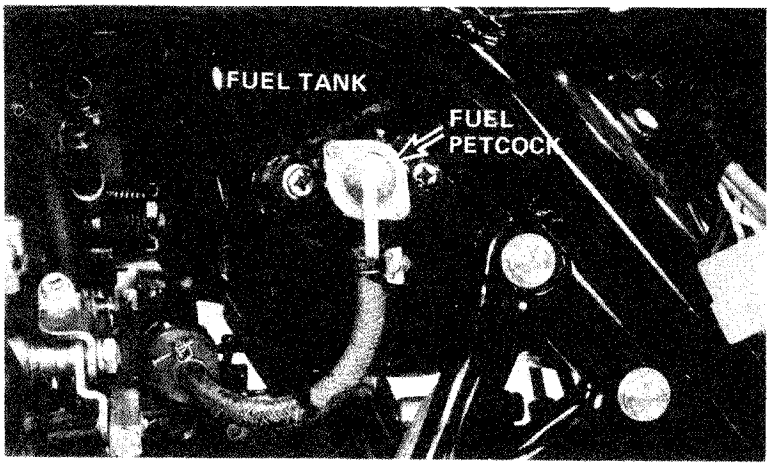

Remove both seat bolts and remove the seat. Disconnect the tail light and turn signal wires. Remove the rear rail bolts, the rail, and turn signals as a unit.

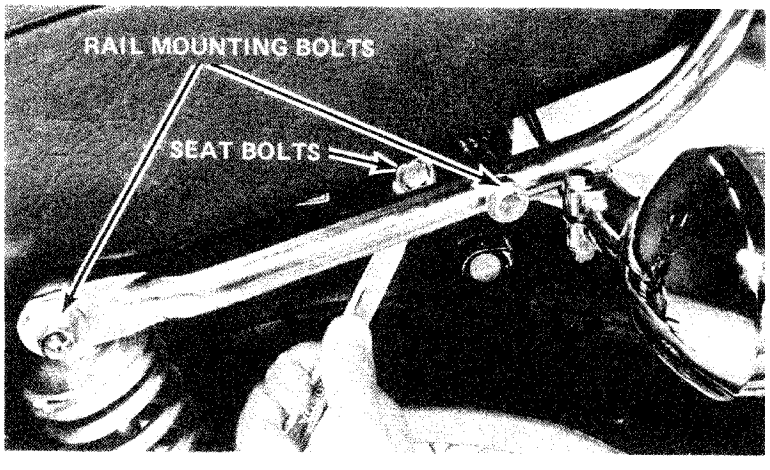

© 1978 American Honda Motor Co., Inc.
Printed in U.S.A. 7-78

FRAME AND SUSPENSION
FUEL TANK REMOVAL

Remove the rear fender bolts and both sections of the rear fender.

Remove the shock absorbers and the rear wheel as described in section 12.

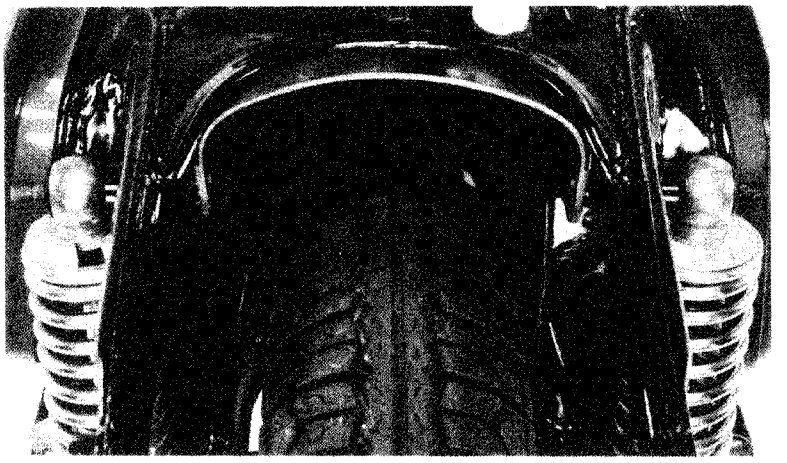

Remove the fuel gauge wires, the tank bolt, and crossplate.

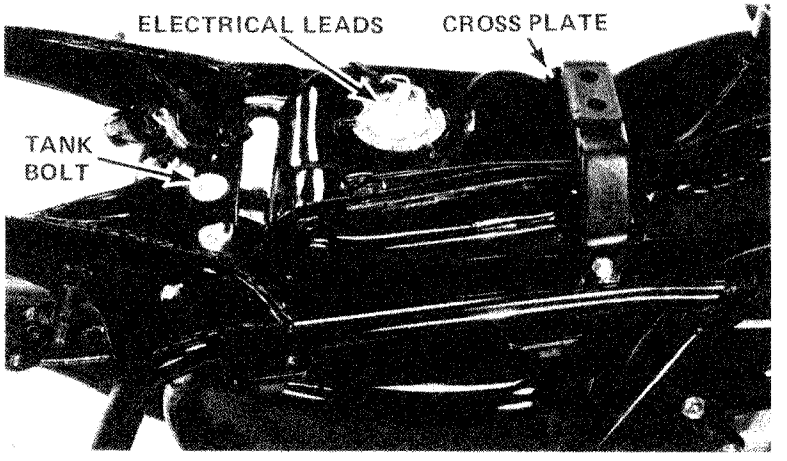

Remove the four service compartment mounting bolts. Remove the battery and the battery box mounting bolts. Partially slide the battery box out of the frame. Elevate the service compartment enough to clear the gas tank filler neck and slide the tank toward the rear of the motorcycle and out of the frame.

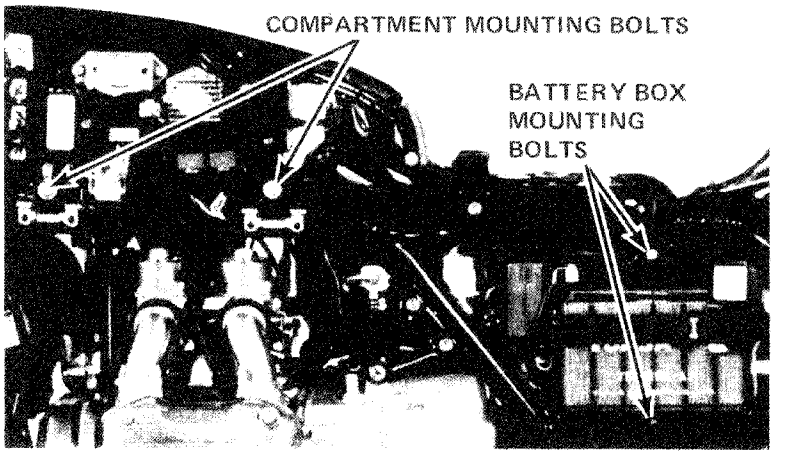

© 1976 American Honda Motor Co., Inc.
Printed in U.S.A. 7-78

MAIN STAND REMOVAL

Loosen the left and right exhaust pipe clamp bolts with a 6mm allen wrench.

Remove the left and right muffler mounting bolts, foot pegs, and muffler.

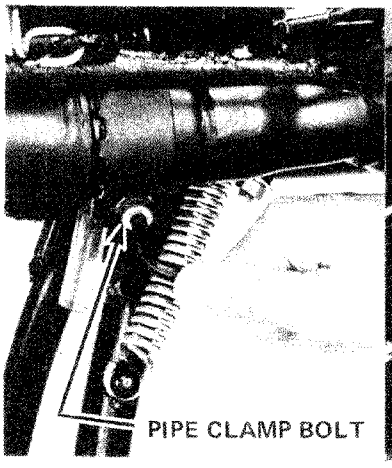

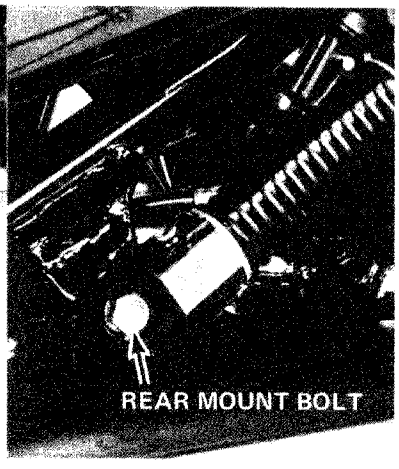

Remove the pivot pipe cotter pin. Loosen the pinch bolts and remove the stand.

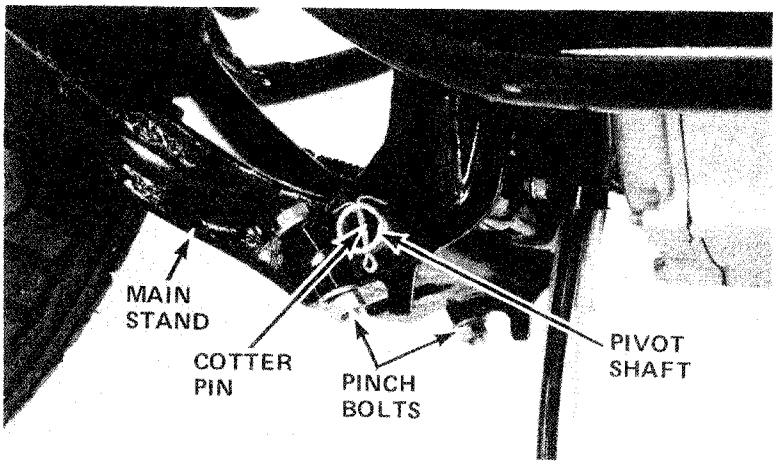

Inspect the stand for cracks or other damage. Lubricate the pivot shaft and reinstall the stand.

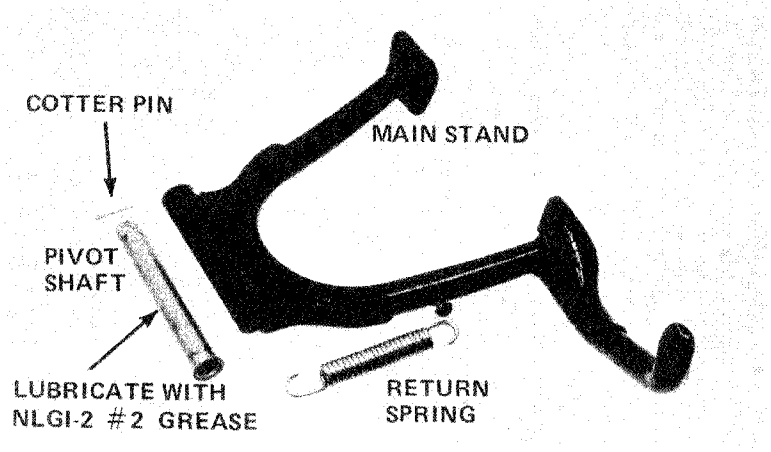

© 1976 American Honda Motor Co., Inc.
Printed in U.S.A. 7-78

SIDE STAND INSPECTION AND REPLACEMENT

NOTE

If the force required to retract the stand is excessive, inspect the pivot area for debris.

Replace the stand if it is bent or cracked, by removing the mounting bolt and spring.

NOTE

Lubricate the pivot bolt and bracket prior to assembly.

Inspect the rubber pad and replace it if it is worn beyond the wear line.

NOTE

Use replacement pad marked "Over 260 lbs."

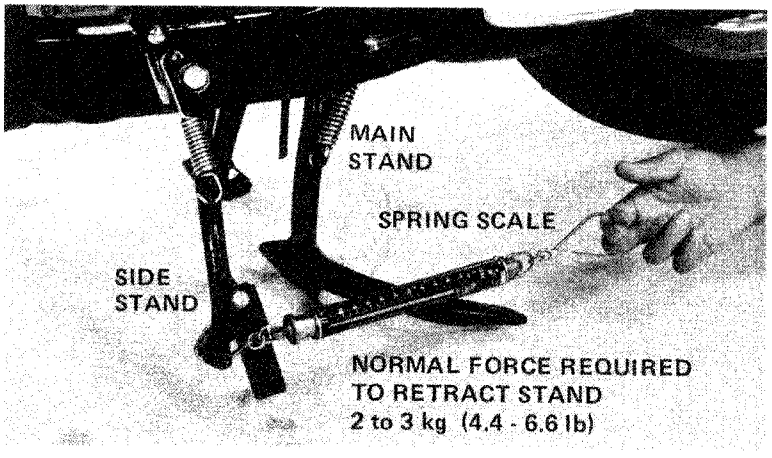

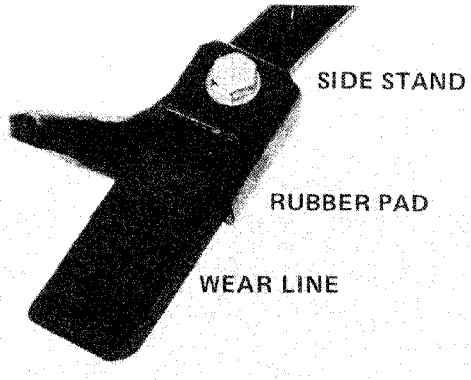

FRAME INSPECTION

Inspect the removable frame section for cracks or damage. Inspect the steering head area and engine mount plate condition.

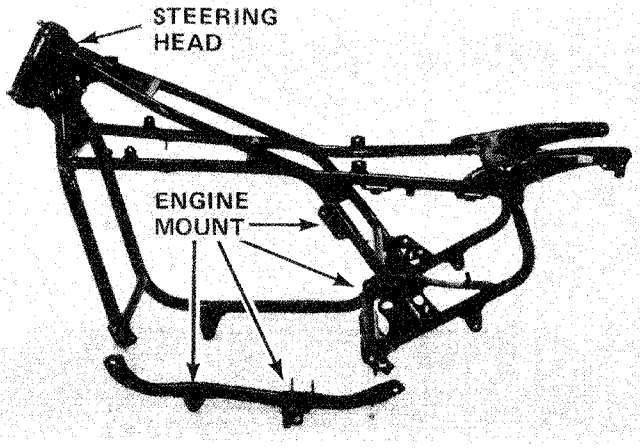

© 1976 American Honda Motor Co., Inc.
Printed in U.S.A. 7-78.

14 BRAKES AND WHEEL ASSEMBLIES

SERVICE INFORMATION 14-2
TROUBLESHOOTING 14-5
BRAKE FLUID LEVEL 14-6
BRAKE FLUID REPLACEMENT/BLEEDING 14-7
FRONT PADS AND CALIPER DISASSEMBLY 14-9
FRONT MASTER CYLINDER DISASSEMBLY 14-13
REAR PADS AND CALIPER DISASSEMBLY 14-16
MASTER CYLINDER REMOVAL AND DISASSEMBLY 14-22
WHEEL INSPECTION 14-25
FRONT AND REAR WHEEL DISASSEMBLY 14-29
AXLE AND DISC INSPECTION 14-31
FRONT AND REAR WHEEL ASSEMBLY 14-32
SPEEDOMETER DRIVE 14-34
TIRES 14-34

© 1978 American Honda Motor Co., Inc.
Printed in U.S.A. 7-78

1975-1977
SERVICE INFORMATION

Brakes

Front master cylinder
bore diameter standard: 17.460 to 17.503 mm (0.6874 - 0.6891 in)
service limit: 17.515 mm (0.6896 in)

Front master cylinder piston
diameter standard: 17.417 to 17.444 mm (0.6857 to 0.6868 in)
service limit: 17.400 mm (0.6850 in)

Front caliper
bore diameter standard: 38.18 to 38.23 mm (1.5031 to 1.5051 in)
service limit: 38.245 mm (1.5057 in)

Front caliper piston
diameter standard: 38.115 to 38.148 mm (1.5005 to 1.5018 in)
service limit: 38.105 mm (1.5001 in)

Rear master cylinder
bore diameter standard: 14.000 to 14.043 mm (0.5511 to 0.5528 in)
service limit: 14.055 mm (0.5533 in)

Rear master cylinder piston
diameter standard: 13.957 to 13.984 mm (0.5495 to 0.5505 in)
service limit: 13.940 mm (0.5488 in)

Rear caliper
bore diameter standard: 38.18 to 38.23 mm (1.5031 to 1.5051 in)
service limit: 38.245 mm (1.5057 in)

Rear caliper bore
diameter standard: 38.18 to 38.23 mm (1.5031 to 1.5051 in)
service limit: 38.245 mm (1.5057)

Rear caliper piston
diameter standard: 38.115 to 38.148 mm (1.5005 to 1.5018 in)
service limit: 38.245 mm (1.5057 in)

Front and rear discs
runout standard: 0 to 0.05 mm (0 – 0.002 in)
service limit: 0.3 mm (0.012 in)
thickness standard (front): 5.9 to 6.1 mm (0.2322 to 0.2401 in)
service limit (front): 5.0 mm (0.1968 in)
thickness standard (rear): 6.9 to 7.1 mm (0.2716 to 0.2795 in)
service limit (rear): 6.0 mm (0.2362 in)

Wheels and Tires

Front tire - size: 3.50H-19
inflation pressure: 2.0 kg/cm^2 (28 psi)

Rear tire - size: 4.50H-17A
inflation pressure: 2.25 kg/cm^2 (32 psi)
(40 psi if load on motorcycle exceeds 200 lbs)

Front and rear wheels
runout standard: 0 to 0.5 mm (0–0.002 in)
service limit: 0.2 mm (0.004 in)

Front and rear axle
runout standard: 0 to 0.05 mm (0 – 0.002 in)
service limit: 0.2 mm (0.008 in)

Front and rear wheel bearings
lateral runout standard (both): 0.07 mm (0.0027 in)
service limit (both): 0.1 mm (0.0039 in)
radial runout standard (front): 0.003 mm (0.0001 in)
service limit (front): 0.05 mm (0.002 in)
radial runout standard (rear): .005 mm (0.0002 in)
service limit (rear): 0.06 mm (0.0023 in)

TORQUE VALUES

Brakes Torque

Front caliper set bolts:
300 to 400 kg-cm (22 to 29 ft-lb)

Front caliper 8 mm allen bolts:
150 to 200 kg-cm (11 to 14 ft-lb)

Front caliper 10 mm allen bolts:
250 to 300 kg-cm (18 to 22 ft-lb)

Rear caliper set bolts: 300 kg-cm (22 ft-lb)

Bleeder valves: 70 to 90 kg-cm (61 to 78 in-lb)

Wheels and Tires

Wheel spokes: 20 to 45 kg-cm (17 to 39 in-lb)

© 1978 American Honda Motor Co., Inc.
Printed in U.S.A. 7-78

BRAKES AND WHEEL ASSEMBLIES
1978-1979 SERVICE INFORMATION

1978-1979
ERVICE INFORMATION

Brakes

1979 Front master cylinder
bore diameter standard: 15.870 - 15.913 mm
(0.6248 - 0.6265 in)
service limit: 15.925 mm (0.6270 in)

1979 Front master cylinder piston
diameter standard: 15.827 - 15.854 mm
(0.6231 - 0.6242 in)
service limit: 15.815 mm (0.6224 in)

Rear caliper
bore diameter standard: 42.85 to 42.90 mm
(1.687 to 1.689 in)
service limit: 42.915 mm (1.690 in)

Rear caliper piston
diameter standard: 42.772 to 42.822 mm
(1.684 to 1.686 in)
service limit: 42.757 mm (1.683 in)

Front and rear discs
runout standard: 0 to 0.05 mm
(0 – 0.0019 in)
service limit: 0.3 mm (0.0118 in)

thickness standard (front): 4.8 to 5.2 mm
(0.189 to 0.205 in)
service limit (front): 4.0 mm (0.157 in)

thickness standard (rear): 6.9 to 7.1 mm
(0.2716 to 0.2795 in)
ervice limit (rear): 6.0 mm (0.2362 in)

vneels and Tires

Rear tire size: 4.50 H17

Front and rear wheels
runout standard: 0 to 1.0 mm
(0 – 0.04 in)
service limit: 2.0 mm (0.08 in)

TORQUE VALUES

Brakes Torque

Mounting bracket bolts:
300 to 400 kg-cm (22 to 29 ft-lb)

Caliper bolts, 8 x 25 mm:
150 to 200 kg-cm (11 to 14 ft-lb)

Bleeder valves: 70 to 90 kg-cm (61 to 78 in-lb)

© 1978 American Honda Motor Co., Inc.
Printed in U.S.A. 7-78

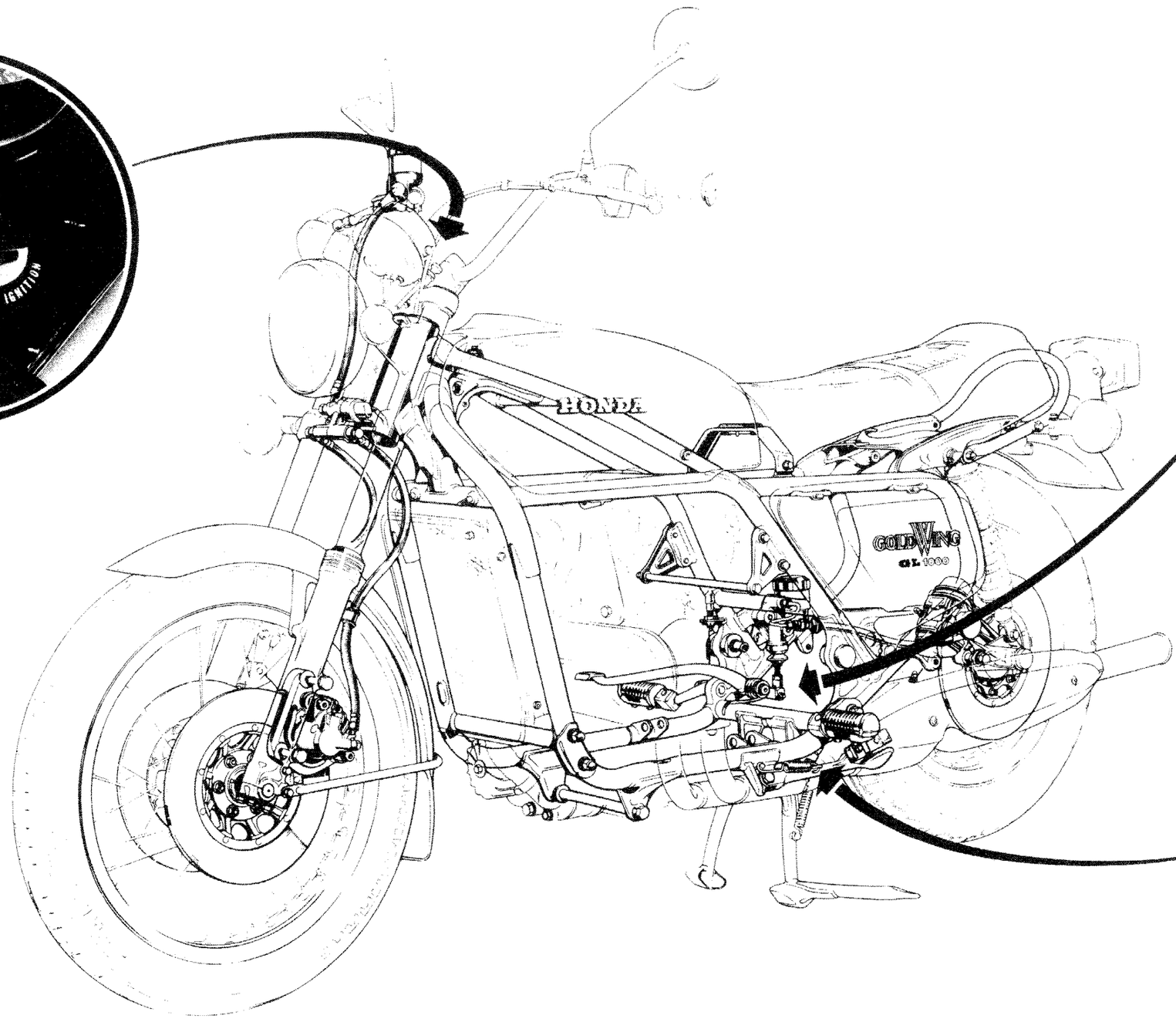

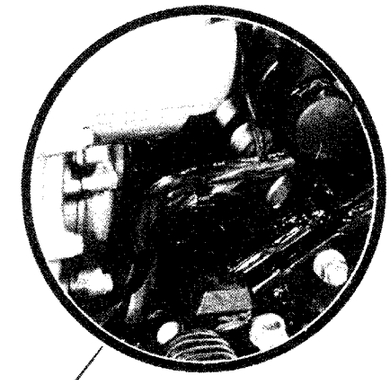

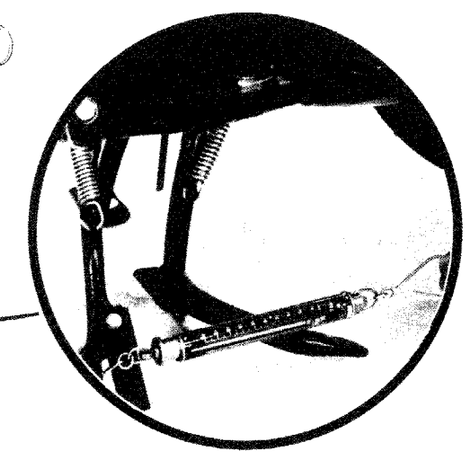

© 1976 American Honda Motor Co., Inc.
Printed in U.S.A. 7 78

FRONT BRAKE SYSTEM

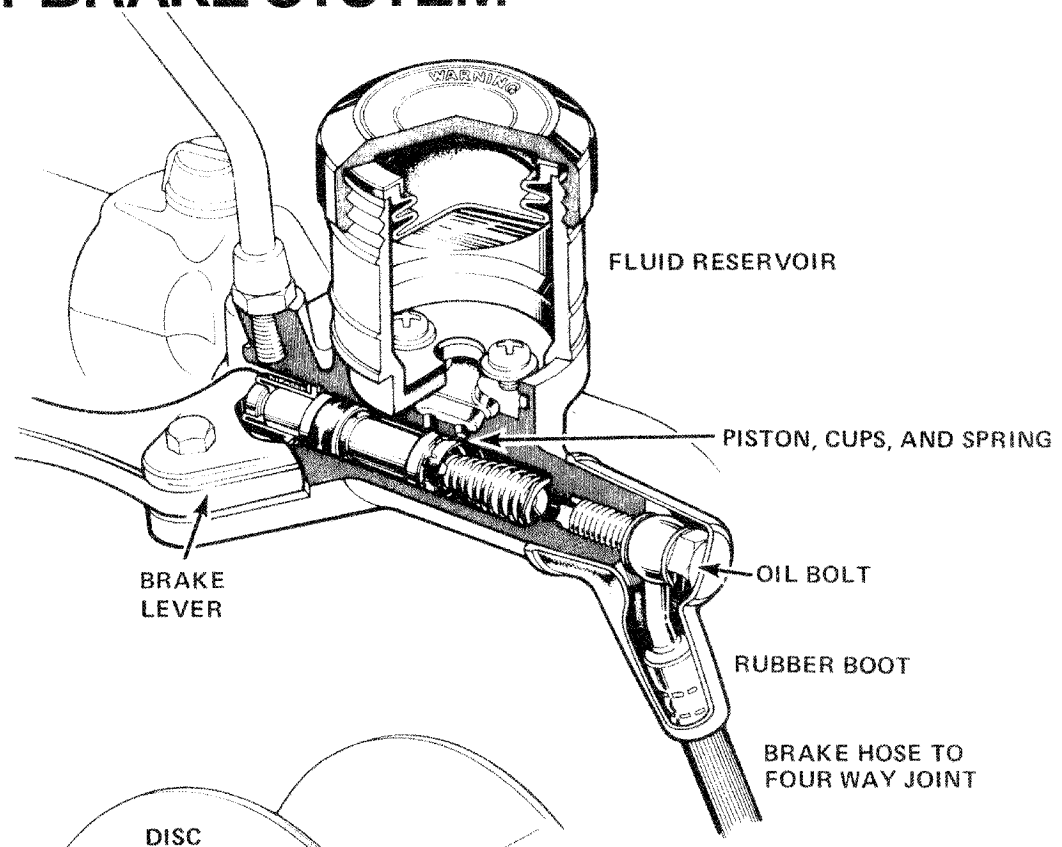

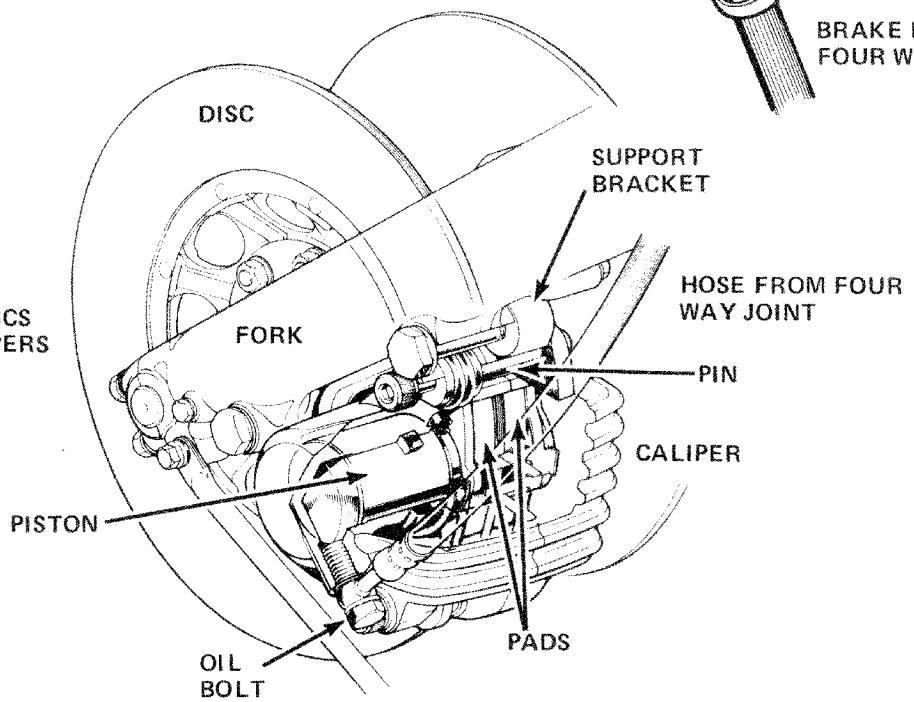

© 1976 American Honda Motor Co., Inc.
Printed in U.S.A. 7 78

BRAKES AND WHEEL ASSEMBLIES SERVICE INFORMATION

Working Practice

BRAKES: The front and rear brakes can be removed without disconnecting the hydraulic system. Once the hydraulic systems have been opened, or if the brakes feel spongy, the system must be bled. Do not allow foreign material to enter the system when filling the reservoirs. Avoid spilling brake fluid on painted surfaces or instrument lenses, as severe damage will result.

Wheel Assemblies

Improperly balanced or aligned wheels will cause the tires to wear irregularly and create steering problems. Always check for abnormal tire wear and loose wheel spokes at each normal service period.

Tools and Materials

Brakes:

Circlip pliers HC 41823
Bleeder hose
Inside micrometer
Outside micrometer
Torque wrench 0-25 kg-m (0-150 ft-lb)
Torque wrench 0-350 kg-cm (0-300 in-lb)
Brake fluid DOT 3
Multi purpose grease NLGI-2
Silicon sealing grease

Wheel Assemblies:

Bearing retainer wrench HC 29823
Bearing driver attachment HC 41321
Driver attachment handle HC 29824
Dial indicator
V-blocks
Tire pressure gauge

TROUBLESHOOTING

Brake Lever/Pedal Soft or Spongy

1. Air bubbles in hydraulic system
2. Insufficient fluid in hydraulic system
3. External leak in hydraulic system
4. Internal leak in hydraulic system

Brake Lever/Pedal Too Hard

1. Frozen piston(s)
2. Clogged hydraulic system
3. Pads glazed or worn excessively

Brakes Drag

1. Hydraulic system sticking
2. Incorrect adjustment of lever or pedal
3. Frozen piston(s)

Brakes Grab or Pull to One Side

1. Pads contaminated
2. Defect in one side of front braking system
3. Disc or wheel misaligned

Brakes Chatter or Squeal

1. Pads contaminated
2. Excessive runout on disc(s)
3. Caliper installed incorrectly
4. Disc or wheel misaligned

© 1978 American Honda Motor Co., Inc.
Printed in U.S.A. 7-78

BRAKE FLUID LEVEL

Check that the fluid reservoirs, front and rear, are filled to the upper level mark engraved inside the reservoir. If the level is below the lower level mark, fill the reservoir with DOT 3 BRAKE FLUID to the upper level mark.

CAUTION

Turn the handlebars fully to the left so the front brake fluid reservoir is level before removing the cap.

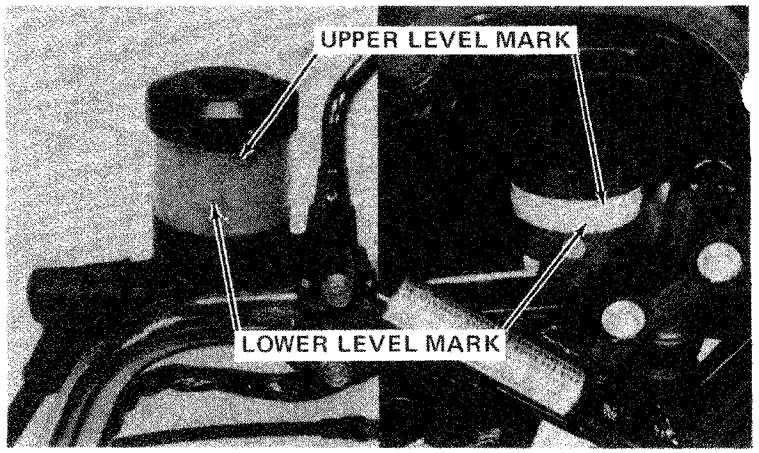

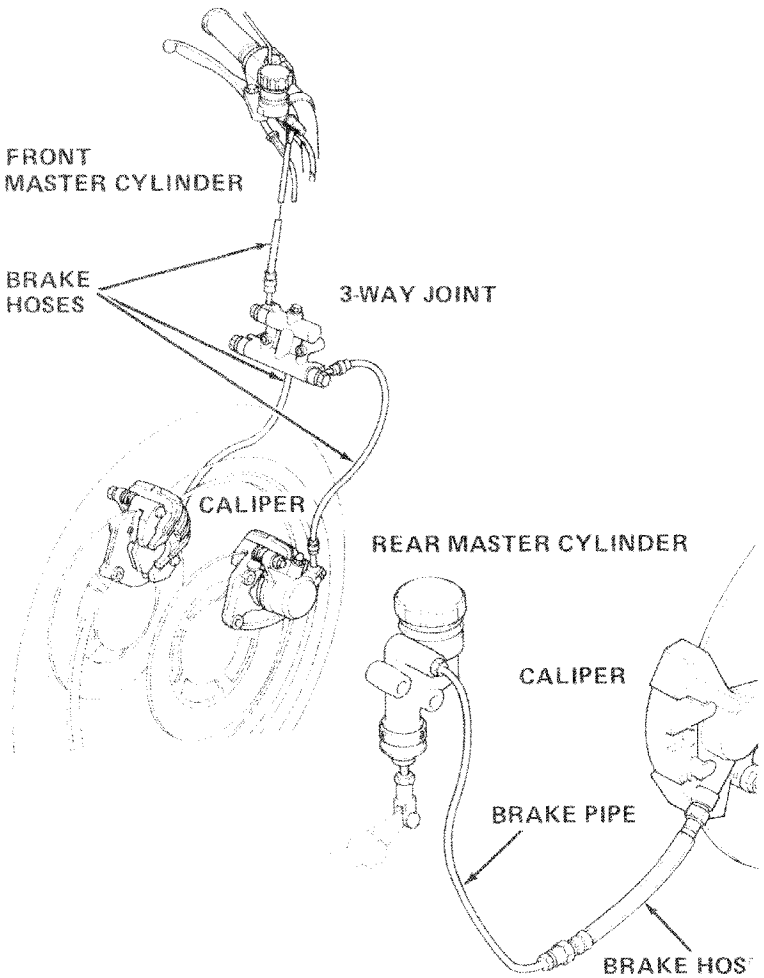

Make sure the brake hoses and fittings are not deteriorated or cracked. Carefully check both front and rear brake systems for leakage.

© 1976 American Honda Motor Co., Inc.
Printed in U.S.A. 7 78

BRAKE FLUID REPLACEMENT

NOTE
Use this procedure on both front and rear brakes.

Remove the bleeder valve dust cap. Connect a bleeder hose and place one end in a clean container. Loosen the caliper bleeder valve and pump the brake lever. Stop operating the lever when no fluid flows out of the bleeder valve.

WARNING

Do not allow brake fluid on the brake discs or pads. Stopping power will be greatly reduced. Replace contaminated pads and clean a contaminated disc with a good quality degreasing agent.

Close the bleeder valve, fill the reservoir and install the diaphragm.

Follow BRAKE BLEEDING procedure.

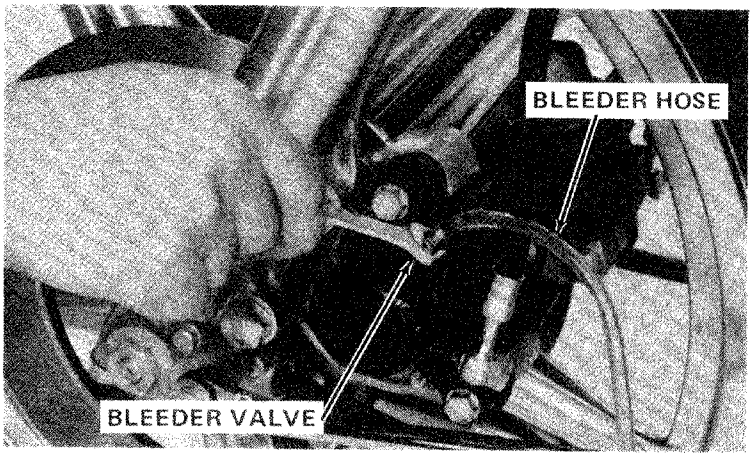

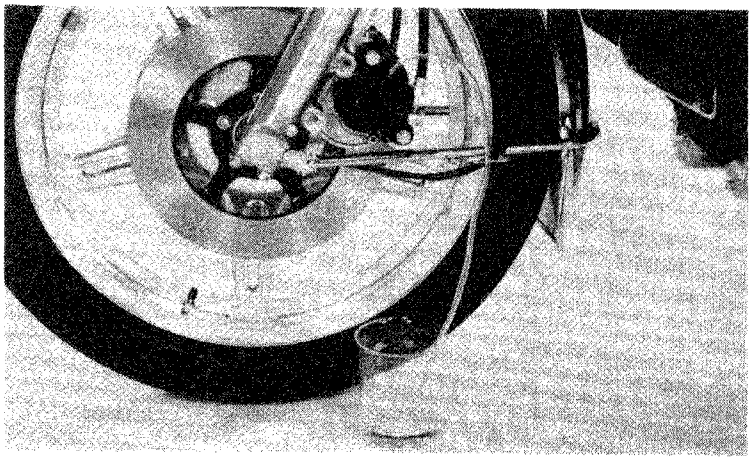

BRAKE BLEEDING

CAUTION

When bleeding the brakes, always install the diaphragm on the reservoir before operating the brake lever. This will prevent brake fluid from squirting out during operation.

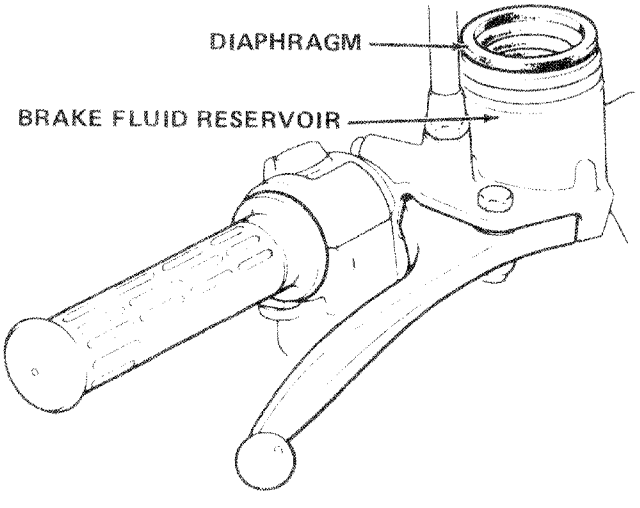

© 1976 American Honda Motor Co., Inc.
Printed in U.S.A. 7-78

BRAKE BLEEDING

NOTE

Use this procedure on both front and rear brakes.

Remove the bleeder valve dust cap. Connect a bleed hose and place one end in a clean container.

NOTE

Check the fluid level often while bleeding the brakes, to prevent air from being pumped into the system.

CAUTION

Avoid spilling fluid on painted surfaces.

CAUTION

When bleeding the front brake system, do not pull the brake lever all the way back to the handlebar grip.

To prevent piston overtravel and brake fluid seepage, attach a 15 mm spacer to the handlebar grip when bleeding the front brake system.

Pump up the system pressure with the lever (or pedal) until it becomes hard. Open the caliper bleed valve.

Close the bleed valve just before the lever (or pedal) reaches the end of its travel. Continue this procedure on both front calipers until the brake lever feels solid.

NOTE

If there is air in the system the lever (or pedal) will feel spongy.

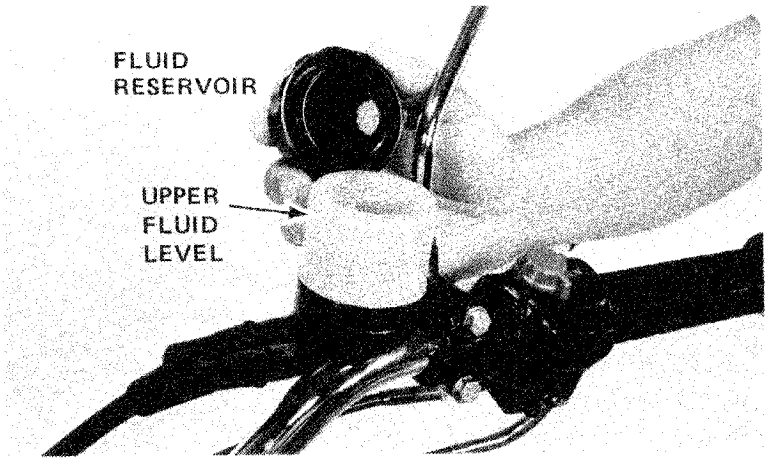

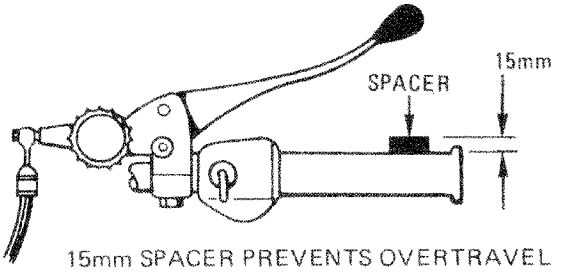

15mm SPACER PREVENTS OVERTRAVEL DURING THE BLEEDING PROCEDURE.

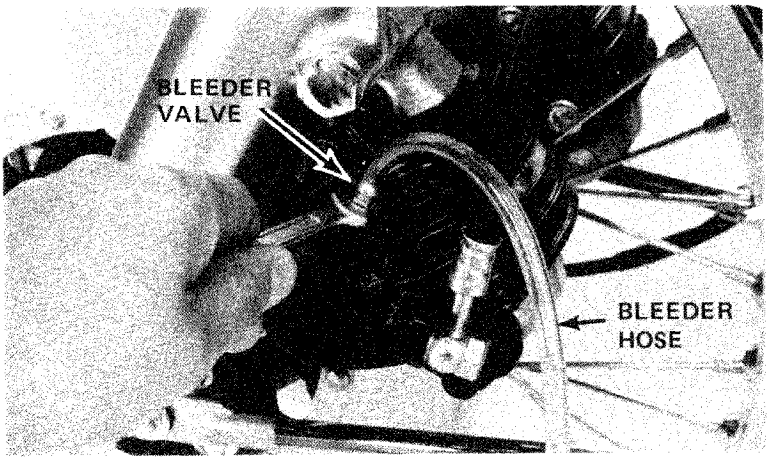

GL-1000 SHOP MANUAL
© 1976 American Honda Motor Co., Inc.
Printed in U.S.A. 7-78

FRONT PAD REPLACEMENT

The front brake pads require replacement if the red line on the top of the pads reaches the edge of the brake disc.

NOTE

Always replace the brake pads in pairs to assure even disc pressure.

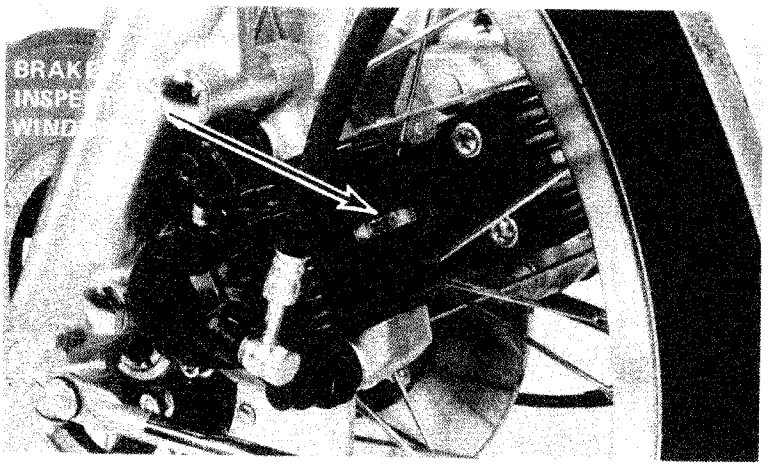

To replace the front brake pads, remove the two allen head bolts on the outside of the caliper.

NOTE

It is not necessary to remove the oil bolt to replace the brake pads.

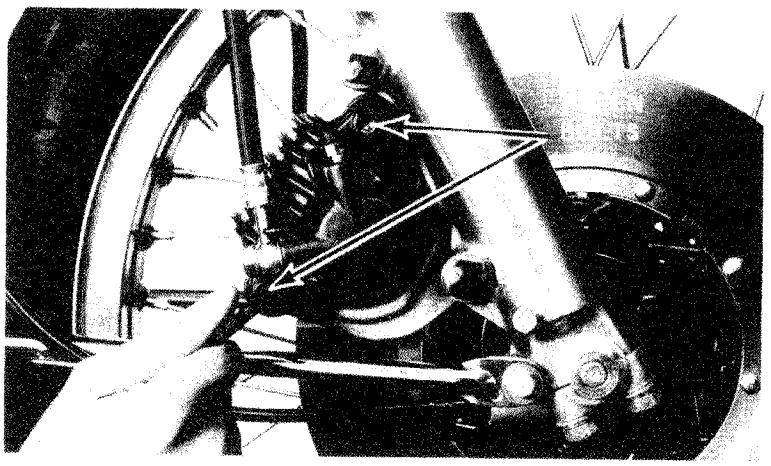

Lift off the caliper and remove both brake pads and the shim.

Install the new brake pads and the shim on the outside pad. The arrow on the shim spacer will point up. It may be necessary to press the brake piston back into the caliper to allow adequate clearance.

In most cases it is not required to bleed the brake system after changing the pads.

Install the caliper and tighten the allen head bolts to 150-200 kg-cm (11-14 ft-lb).

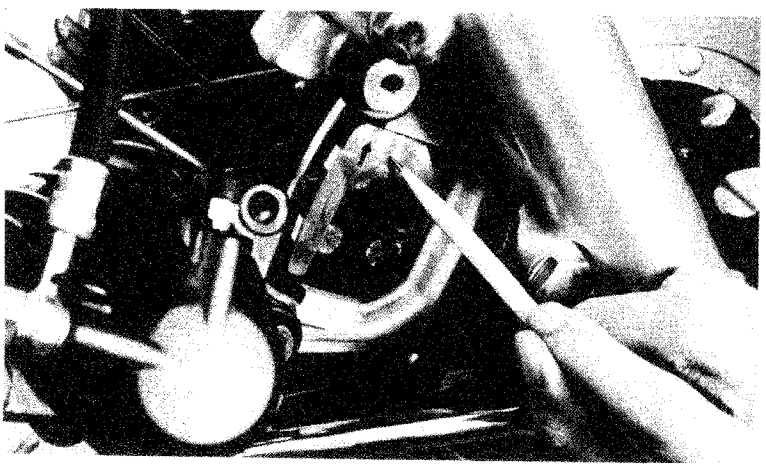

© 1978 American Honda Motor Co., Inc.
Printed in U.S.A. 7-78

Place a suitable container under the caliper. Remove the brake line bolt (banjo bolt), disconnecting the brake line from the caliper.

NOTE

Discard any brake fluid which drains from the brake line. Always refill the reservior with fresh DOT 3 brake fluid from a sealed container.

Remove the two caliper mounting bolts and remove the caliper. Note the installation position of the pad spring, and remove the pad spring.

Remove the piston boot clip, piston boot, and piston. It may be necessary to apply a slight amount of air pressure to the caliper fluid inlet to remove the piston. If air pressure is used to remove the piston, place a shop rag or other cloth in the caliper, as shown, to prevent the piston from becoming damaged when it is expelled.

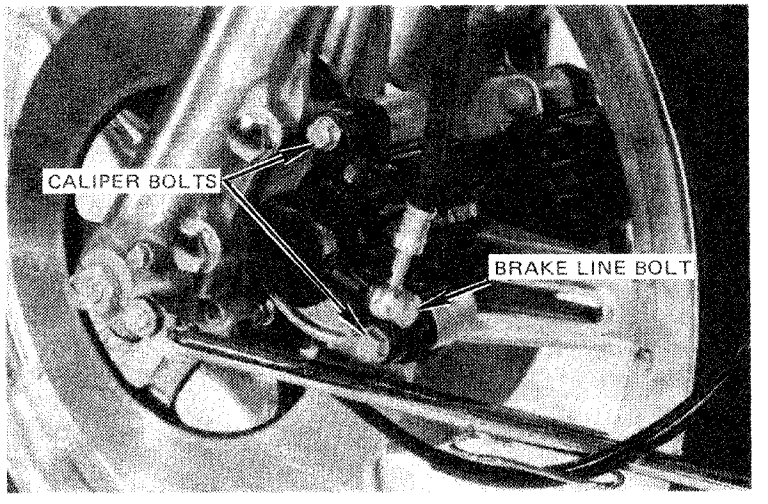

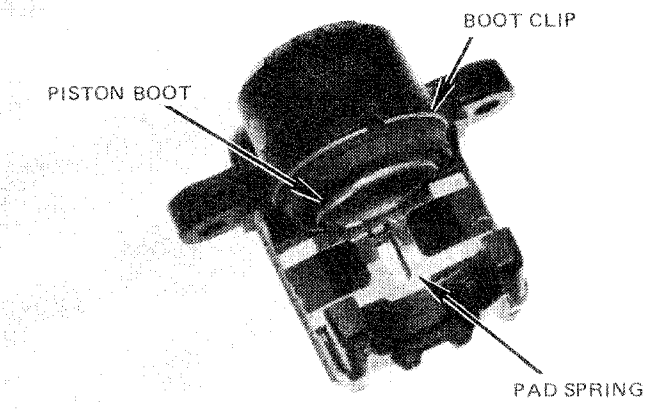

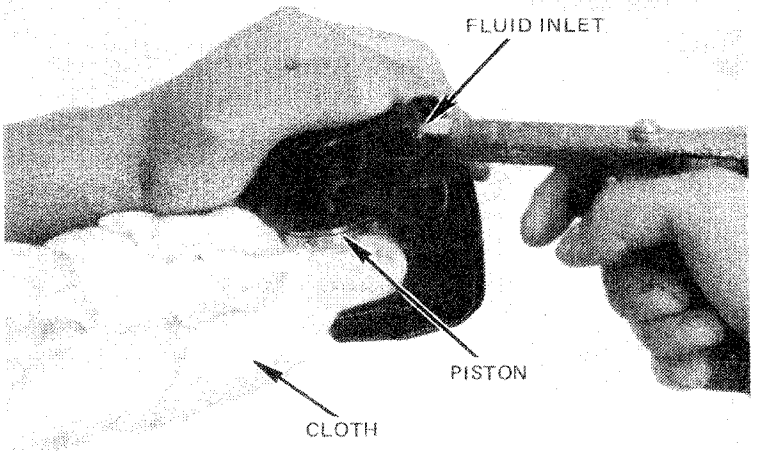

GL-1000 SHOP MANUAL
© 1976 American Honda Motor Co., Inc.
Printed in U.S.A. 7-78

BRAKE AND WHEEL ASSEMBLIES
FRONT CALIPER INSPECTION

Caliper Inspection

Measure the piston outside diameter and caliper bore inside diameter. Replace if worn beyond service limits.

	PISTON OUTSIDE DIAMETER	CALIPER INSIDE DIAMETER
STANDARD	38.115 to 38.148 mm (1.5005 to 1.5018 in)	38.18 to 38.23 mm (1.5031 to 1.5051 in)
SERVICE LIMIT	38.105 mm (1.5001 in)	38.245 mm (1.5007 in)

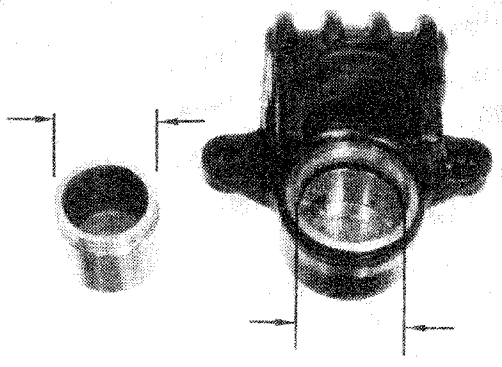

Inspect the piston seal. Replace if hardened or deteriorated.

Lubricate the piston with a medium grade high temperature silicone grease before assembly.

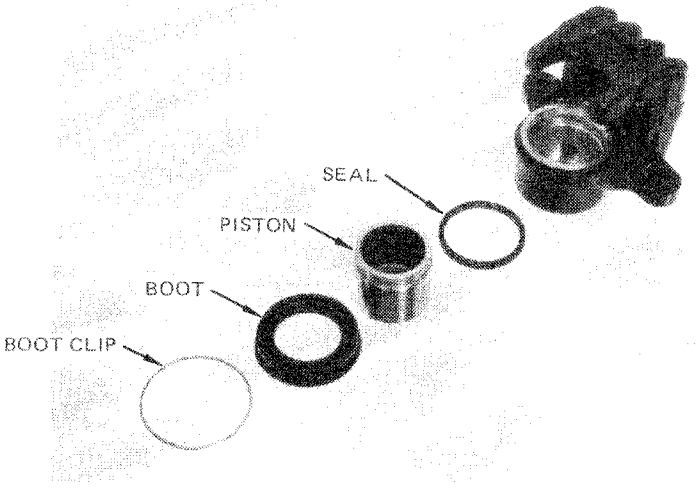

Check caliper pins to be sure they move freely in the mounting bracket holes. Lubricate both pins with a medium grade high temperature silicone grease before assembly.

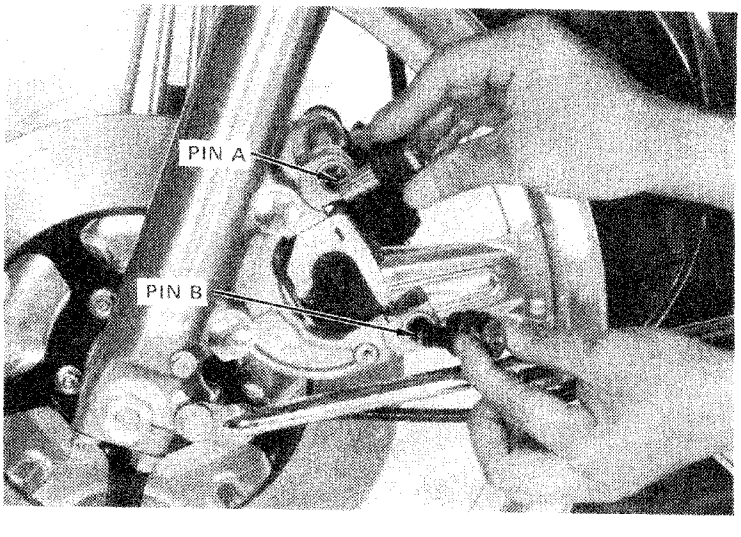

© 1978 American Honda Motor Co., Inc.
Printed in U.S.A. 7-78

FRONT CALIPER ASSEMBLY

Assemble the caliper in the reverse order of disassembly. Lubricate the piston and seal with a medium grade high temperature silicone grease before assembly. Be certain the piston seal is seated in the caliper groove.

Place the piston in the caliper with the boot lip facing out. Install the boot and clip on the piston. Install the pad spring in the caliper.

Place the brake pads and brake pad shim on the mounting bracket, and install the caliper. Tighten the 8 x 25 mm caliper bolts to 150 - 200 kg-cm (11 - 14 ft-lb).

Connect the hydraulic line to the caliper. Fill the reservoir with fresh DOT 3 brake fluid from a sealed container. Bleed the brake system as described on page 14-5.

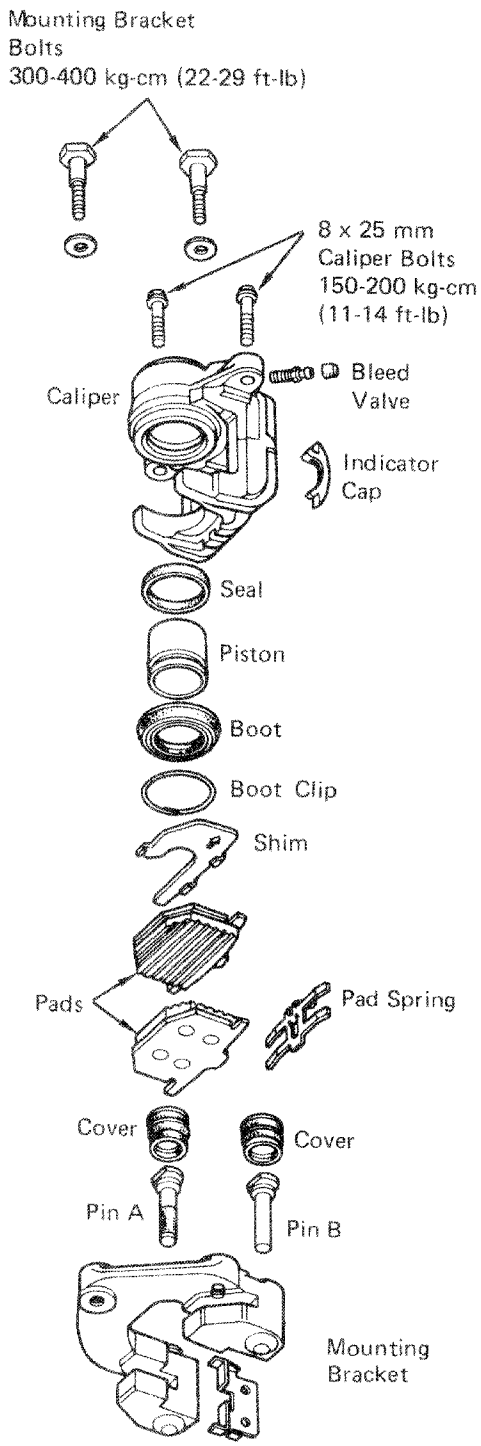

GL-1000 SHOP MANUAL
© 1976 American Honda Motor Co., Inc.
Printed in U.S.A. 7-78

FRONT MASTER CYLINDER DISASSEMBLY

Drain the front master cylinder. Remove the brake line bolt, mirror, front brake lever and the master cylinder attaching bolts.

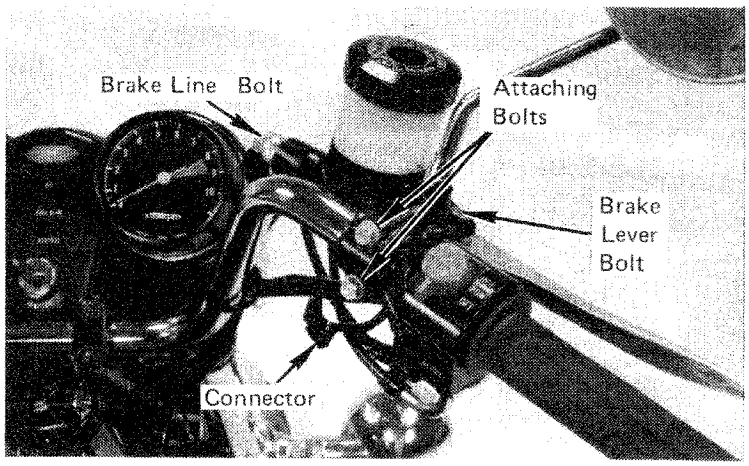

NOTE

When removing the brake line bolt, cover the end of the hose to prevent contamination and secure the hose to the fork.

CAUTION

Avoid spilling brake fluid on painted surfaces.

Remove the boot from the master cylinder body.

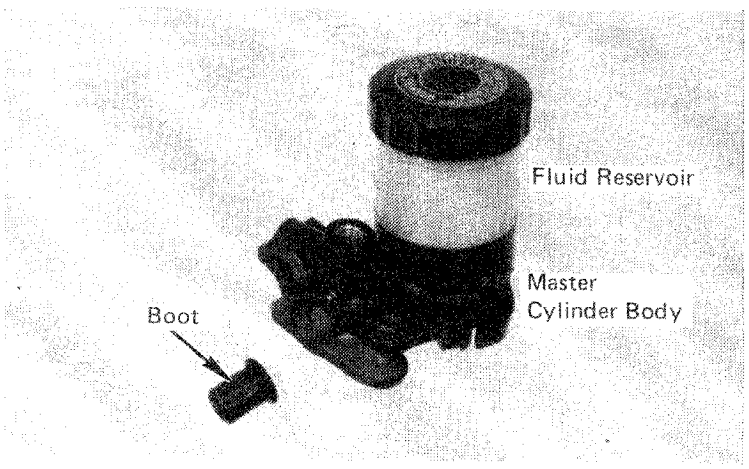

Remove the circlip from the master cylinder body, using circlip pliers.

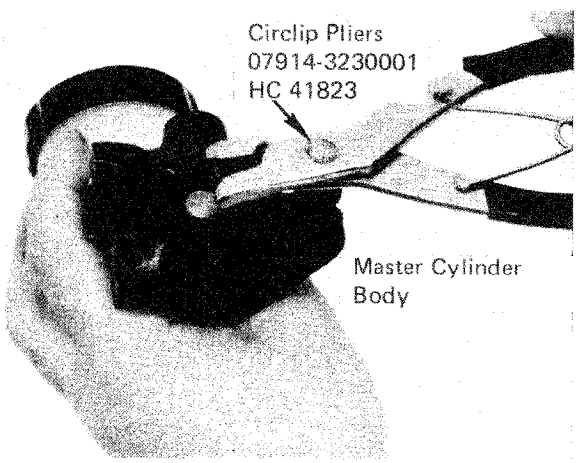

© 1976 American Honda Motor Co., Inc.
Printed in U.S.A. 7-78

Remove the stop plate, secondary cup and piston. Then remove the primary cup, spring and check valve (1975 - 1977 models only require check valve removal).

NOTE

It may be necessary to apply a slight amount of air pressure to the master cylinder outlet to remove the piston and primary cup.
Clean the master cylinder components with DOT 3 brake fluid.

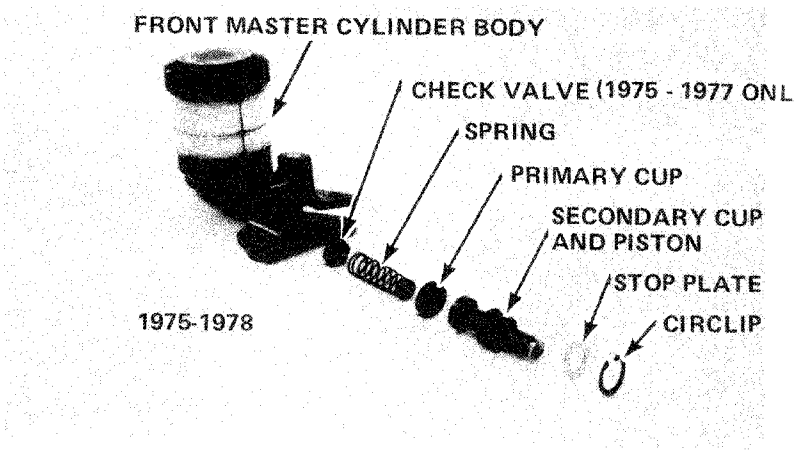

FRONT MASTER CYLINDER INSPECTION

Remove the reservoir screws, plate, and reservoir. Check the condition of the o-ring.

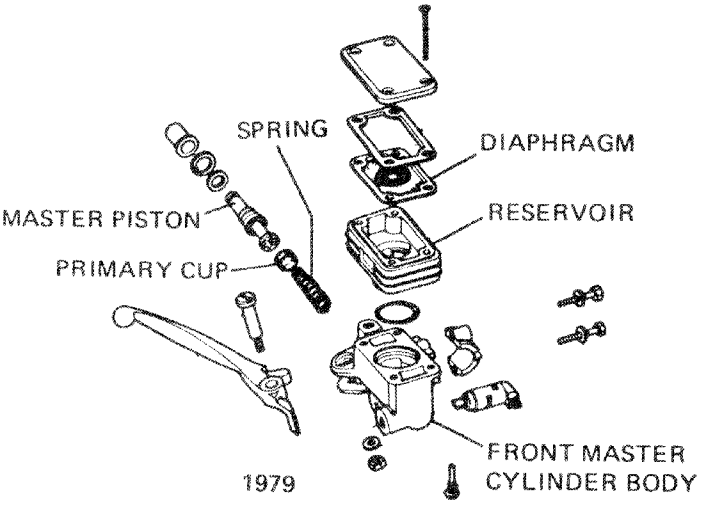

Measure the inside diameter of the master cylinder piston bore.

1975 - 1978	
STANDARD	17.460 - 17.503 mm (0.6874 - 0.6891 in)
SERVICE LIMIT	17.515 mm (0.6896 in)
1979	
STANDARD	15.870 - 15.913 mm (0.6248 - 0.6265 in)
SERVICE LIMIT	15.925 mm (0.6270 in)

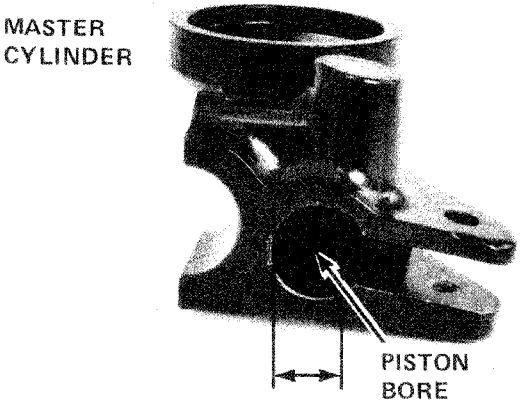

© 1978 American Honda Motor Co., Inc.
Printed in U.S.A. 7-78

Measure the outside diameter of the piston.

1975 - 1978	
STANDARD	17.417 - 17.440 mm (0.6857 - 0.6868 in)
SERVICE LIMIT	17.400 mm (0.6850 in)
1979	
STANDARD	15.827 - 15.854 mm (0.6231 - 0.6242 in)
SERVICE LIMIT	15.815 mm 0.6224 in)

Check both primary and secondary cups for condition.

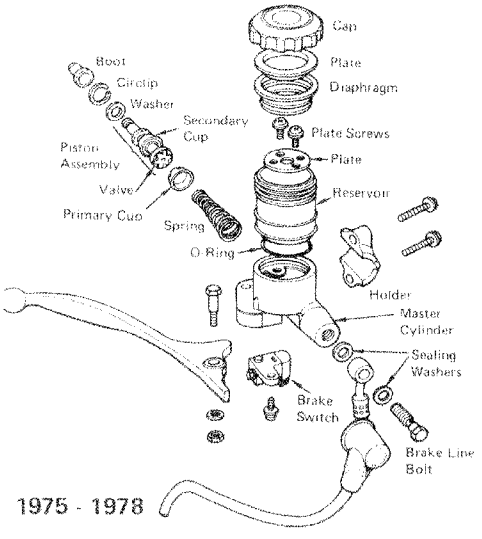

1975 - 1978

FRONT MASTER CYLINDER ASSEMBLY

CAUTION

Handle the master cylinder piston, cylinder and spring as a set.

Assemble the master cylinder. Coat all parts with clean brake fluid before assembly.
Place the spring on the check valve. Install the spring and valve together. Dip the piston cup in brake fluid before assembly.

CAUTION

When installing the cups, do not allow the lips to turn inside out. Be certain the circlip is seated firmly in the groove.

Install the boot, washer and clip. Install the reservoir on the master cylinder making sure that the o-ring is in good condition. Place the plate in the reservoir and install the two plate screws (1975 - 1978).

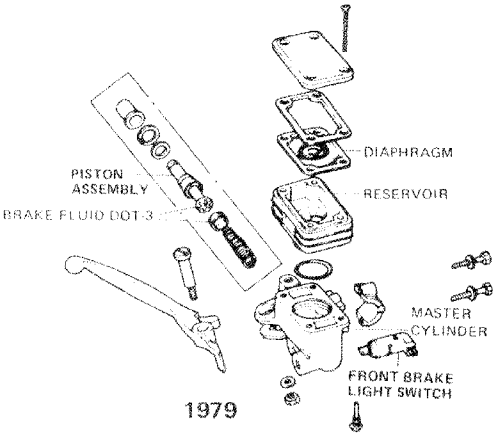

1979

Place the master cylinder on the handlebar and install the holder and the two mounting bolts making sure that the high mating surface of the holder is on the top and the top bolt is tightened first. Install the brake line bolt and its two sealing washers. Install the brake lever and bolt and nut.

Fill the reservoir to the upper level and bleed the brake system as described on page 14-8.

© 1978 American Honda Motor Co., Inc.
Printed in U.S.A. 7-78

BRAKES AND WHEEL ASSEMBLIES
REAR BRAKE SYSTEM

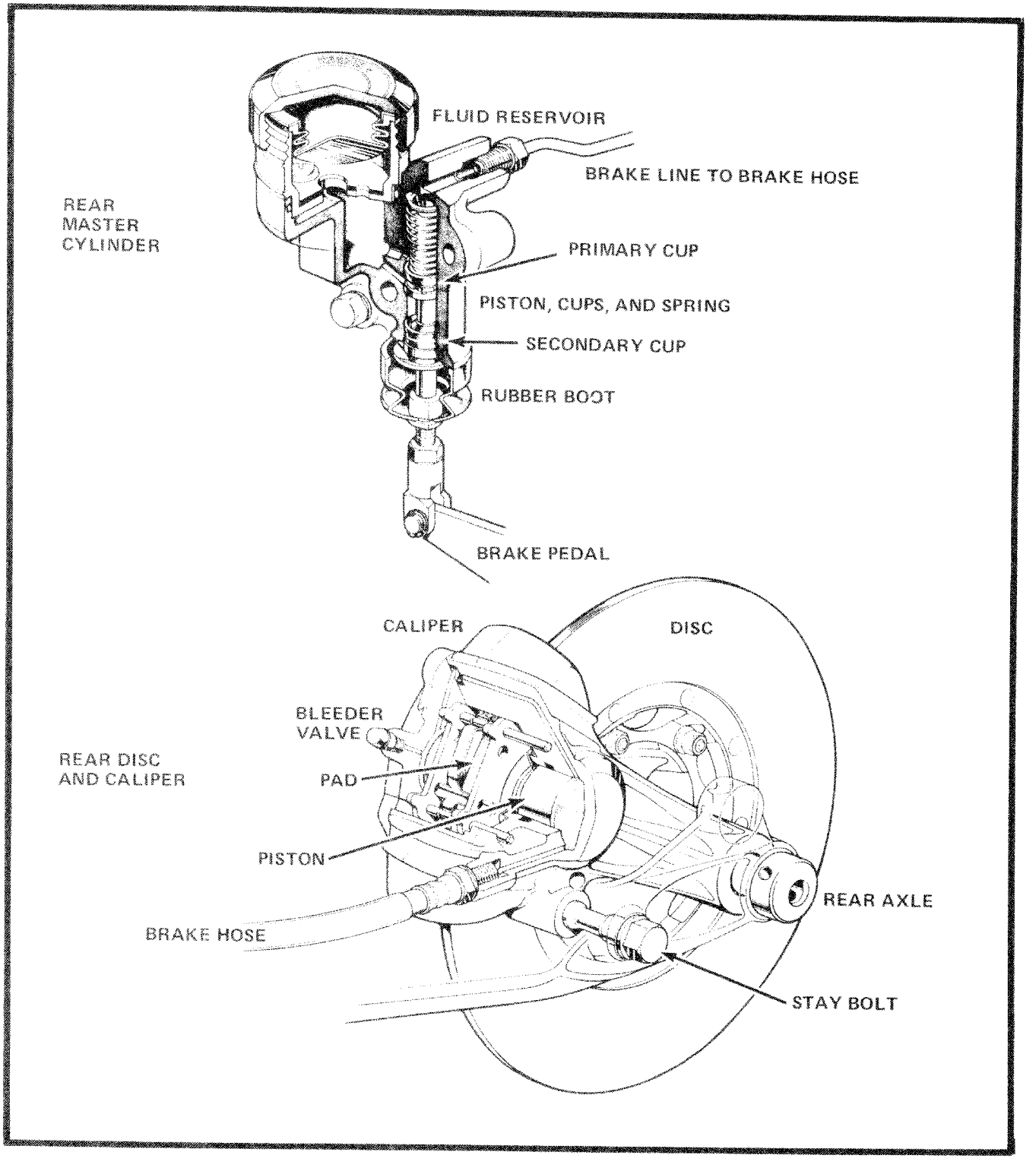

GL-1000 SHOP MANUAL
© 1976 American Honda Motor Co., Inc.
Printed in U.S.A. 7-78

REAR BRAKE PAD REPLACEMENT

When the pads wear to the red zone, they must be replaced. Always replace both pads as a set.

To replace the rear pads, remove the pad cover, depress the spring securing the pad locating pins, and remove the top pin. Tilt the spring back to remove the bottom pin, then remove the pads and shims.

Install replacement pads in reverse order of disassembly. Be sure the arrows on the brake pad shims point downward.

Pads and shims must be properly aligned before installing the pins. It may be necessary to push both caliper pistons back into their cylinders to provide adequate clearance for pad installation.

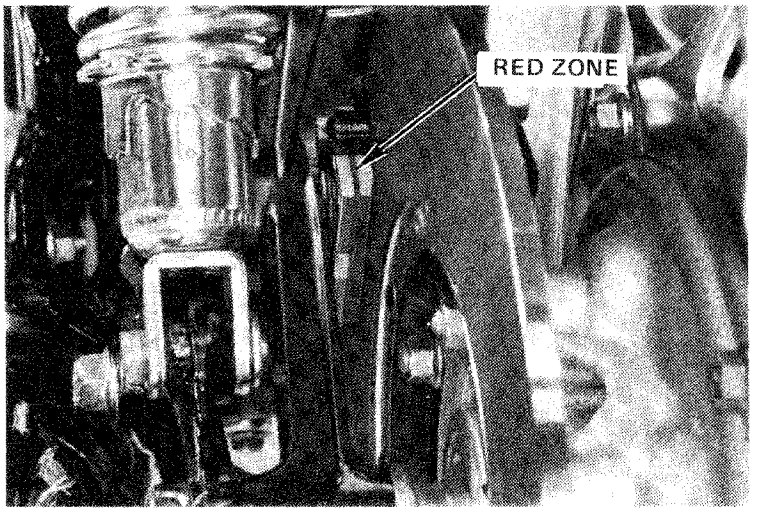

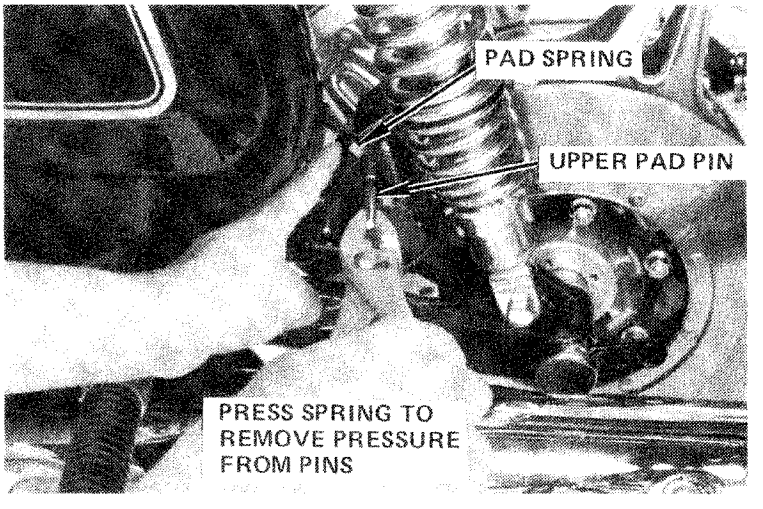

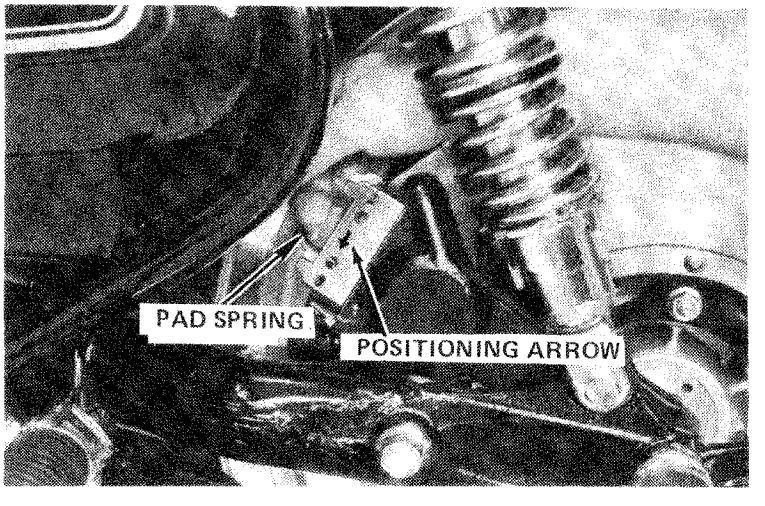

© 1978 American Honda Motor Co., Inc.
Printed in U.S.A. 7-78

REAR CALIPER REMOVAL

Remove both lower shock absorber bolts.

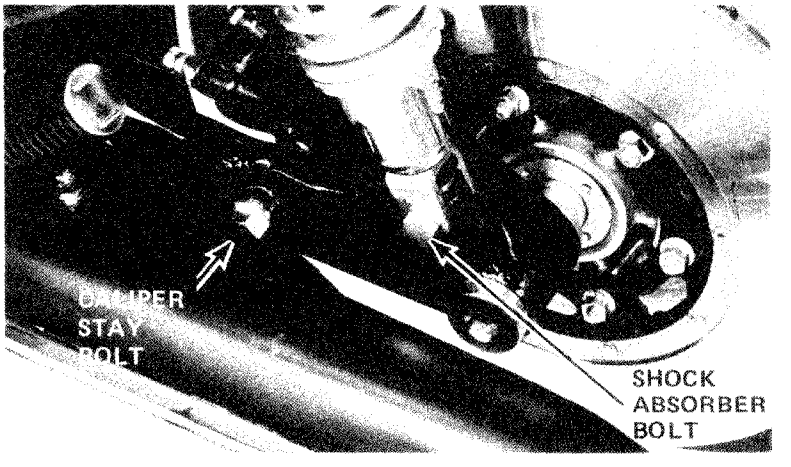

Raise the swing arm and secure it. Remove the caliper stay bolt. Remove the cotter pin from the axle nut and remove the nut and axle.

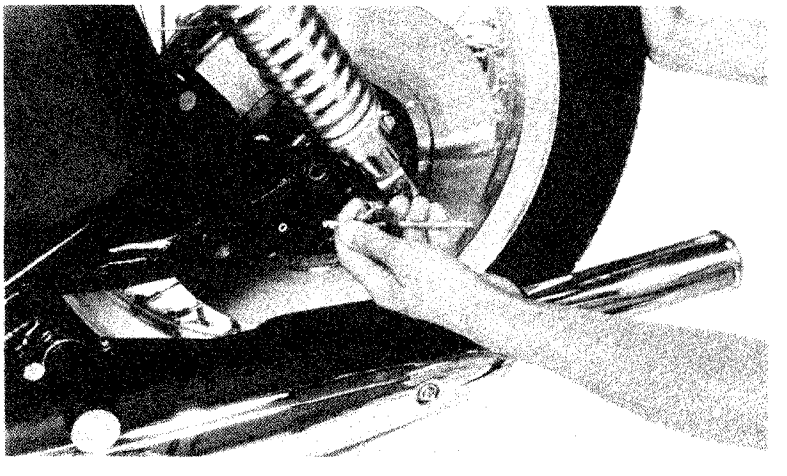

Lift up on the brake caliper and pull it out over the muffler. Remove the brake line from the caliper and place a clean container under the line.

NOTE

Avoid spilling brake fluid on painted surfaces.

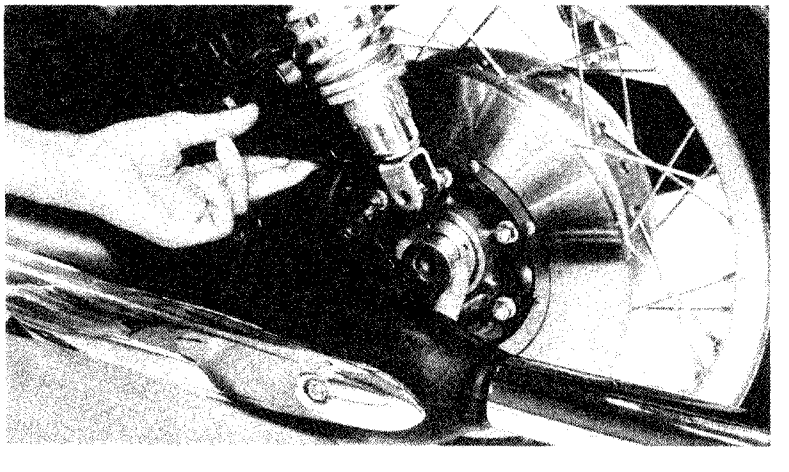

© 1976 American Honda Motor Co., Inc.
Printed in U.S.A. 7-78

REAR CALIPER DISASSEMBLY

Remove the pad cover and the two bolts. Separate the caliper halves.

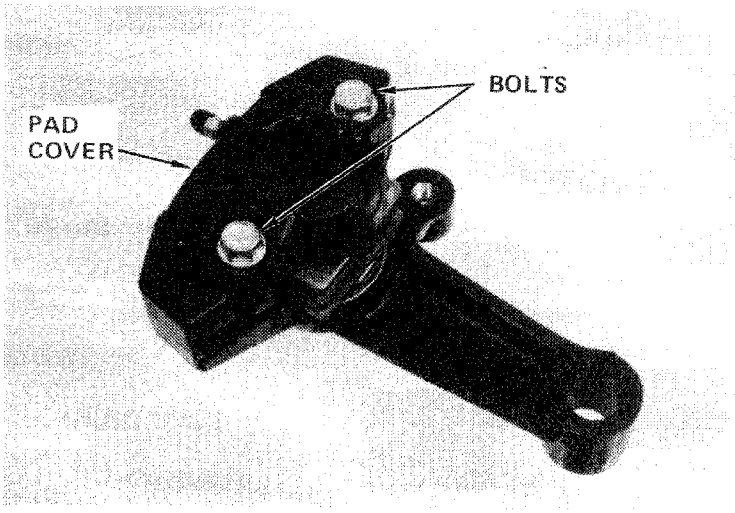

Remove the pads, pins and spring as an assembly.

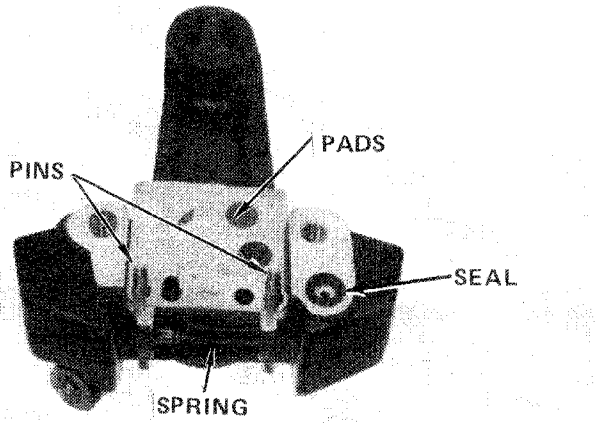

Remove the boot clips and the boots on both caliper sides. Remove both pistons. It may be necessary to apply a slight amount of air pressure to the back of the piston to remove it.

NOTE

The pistons should be marked to indicate which caliper side they were removed from.

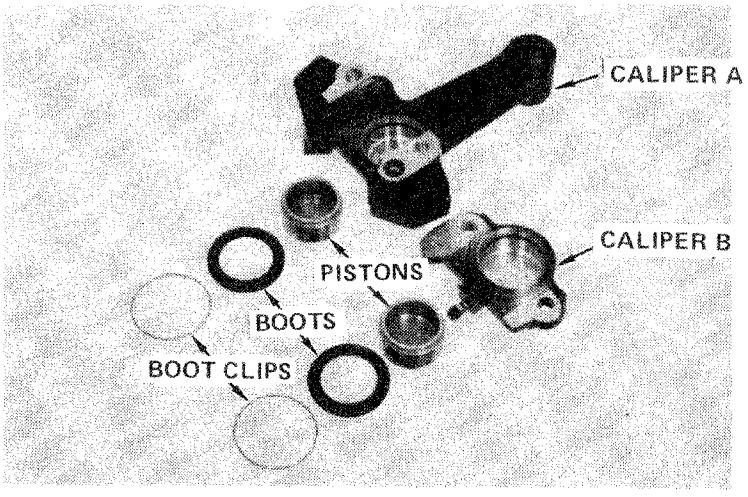

© 1978 American Honda Motor Co., Inc.
Printed in U.S.A. 7-78

REAR CALIPER INSPECTION

Inspect the pistons for pits and scratches. Measure the outside diameter of both pistons.

PISTON O.D. 1975 - 1977	
STANDARD	38.115 - 38.148 mm (1.5005 - 1.5018 in)
SERVICE LIMIT	38.245 mm (1.5007 in)
PISTON O.D. 1978 - 1979	
STANDARD	42.772 - 42.822 mm (1.684 - 1.686 in)
SERVICE LIMIT	42.757 mm (1.683 in)

Make sure each piston is reinstalled in the same caliper side that it was removed from.

Measure the inside diameter of the caliper cylinders.

CALIPER I.D. 1975 - 1977	
STANDARD	38.180 - 38.230 mm (1.5031 - 1.5051 in)
SERVICE LIMIT	38.245 mm (1.5007 in)
CALIPER I.D. 1978 - 1979	
STANDARD	42.850 - 42.900 mm (1.6870 - 1.6890 in)
SERVICE LIMIT	42.915 mm (1.6900 in)

Inspect the piston seals inside the calipers. Check the condition of the boots and the brake line.

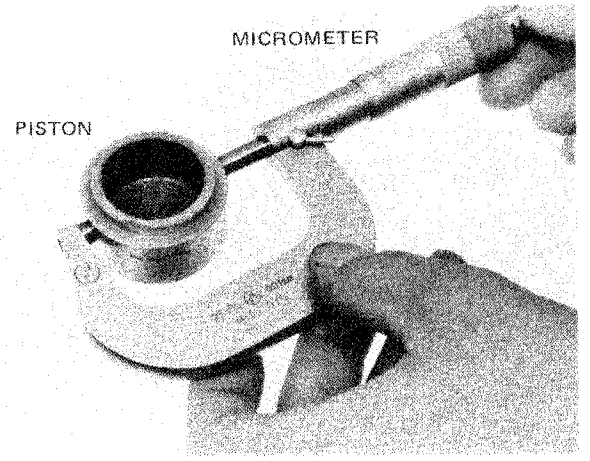

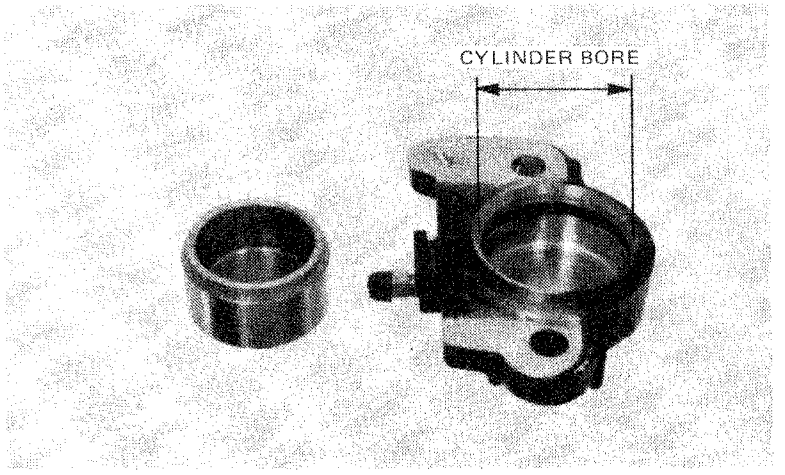

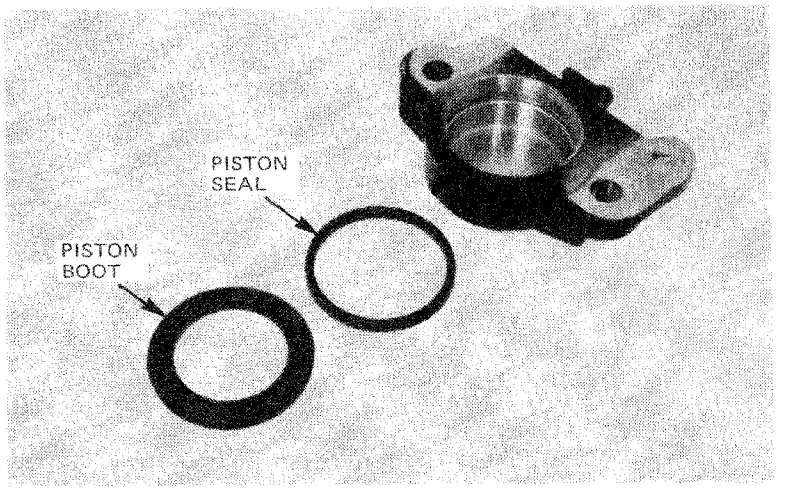

© 1978 American Honda Motor Co., Inc.
Printed in U.S.A. 7-78

REAR CALIPER ASSEMBLY

Assemble the caliper.

Apply a thin coat of medium grade Hi Temperature Silicone Grease to the piston and seal before assembly.

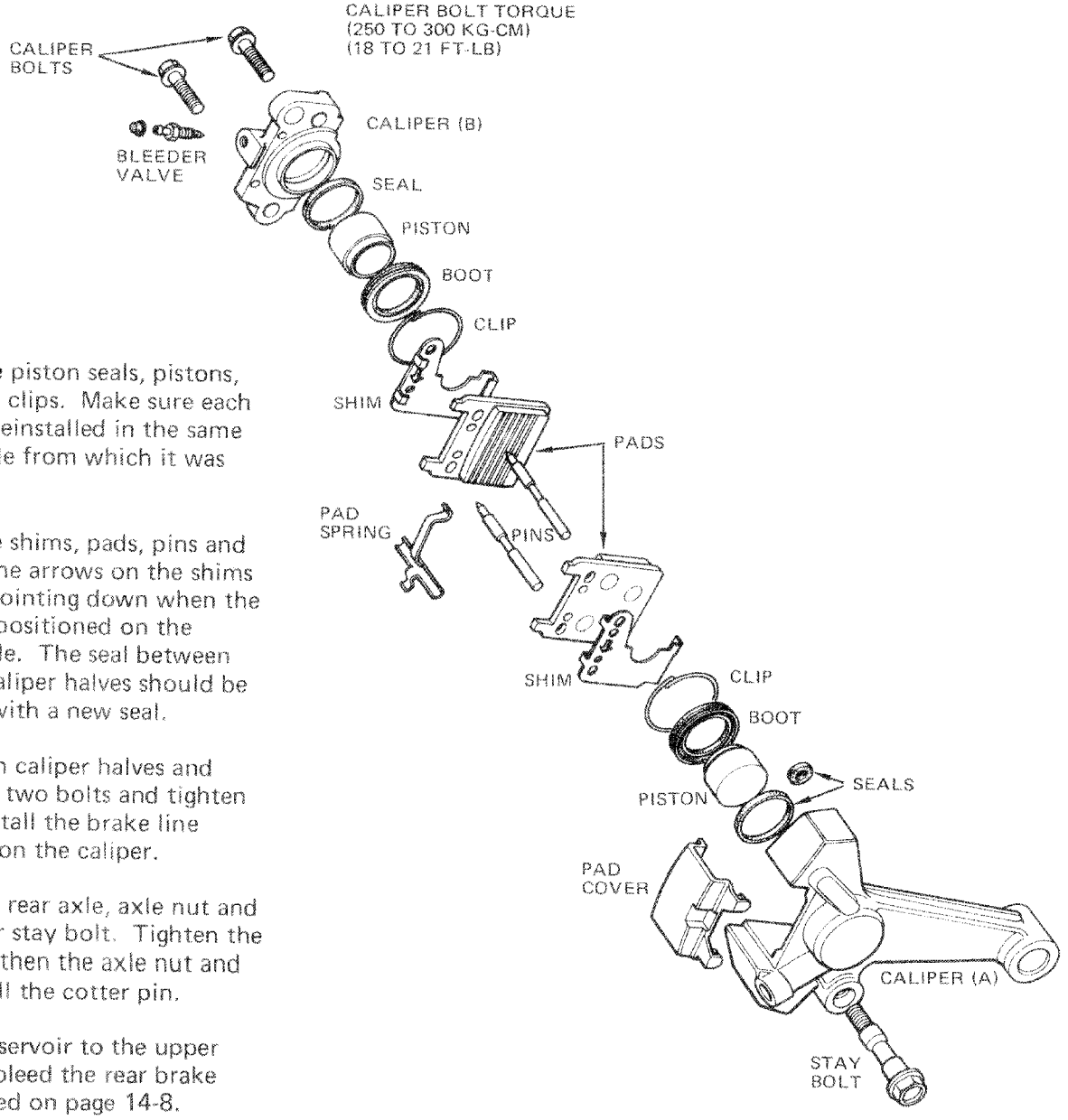

Install the piston seals, pistons, boots and clips. Make sure each piston is reinstalled in the same caliper side from which it was removed.

Install the shims, pads, pins and spring. The arrows on the shims must be pointing down when the caliper is positioned on the motorcycle. The seal between the two caliper halves should be replaced with a new seal.

Align both caliper halves and install the two bolts and tighten them. Install the brake line and position the caliper.

Install the rear axle, axle nut and the caliper stay bolt. Tighten the stay bolt, then the axle nut and then install the cotter pin.

Fill the reservoir to the upper level and bleed the rear brake as described on page 14-8.

© 1978 American Honda Motor Co., Inc.
Printed in U.S.A. 7-78

MASTER CYLINDER REMOVAL

Remove the right side cover. Disconnect the brake line on the back of the master cylinder. Remove the pin from the rod eye and remove the two mounting bolts.

Place a clean drip pan under the brake line.

CAUTION

Avoid spilling brake fluid on painted surfaces.

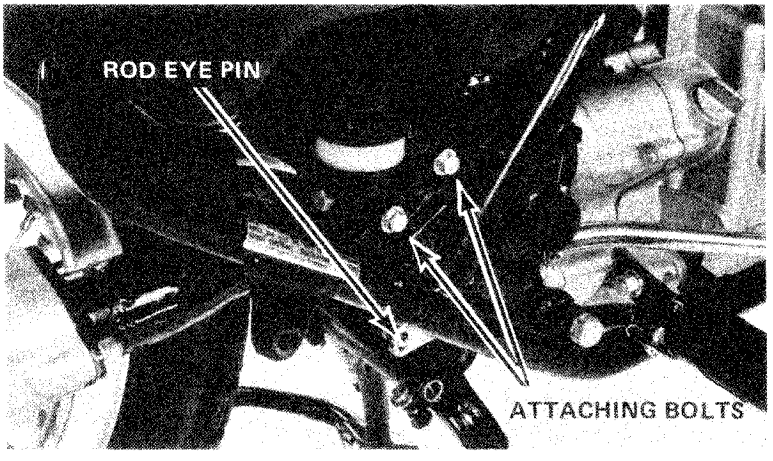

MASTER CYLINDER DISASSEMBLY

Remove the rod eye and rubber cover.

Remove the circlip and pushrod.

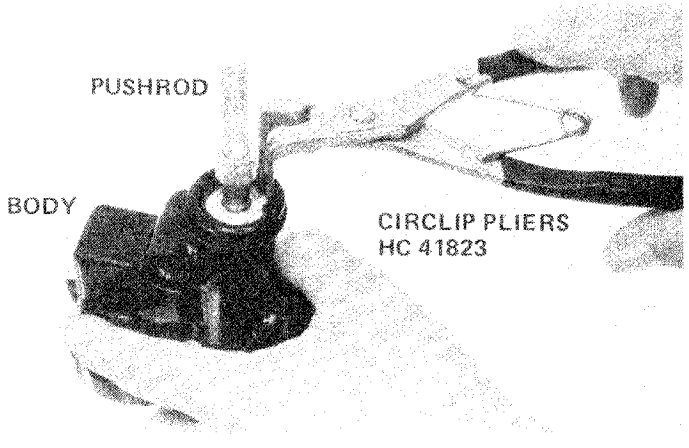

Remove the piston, primary cup, spring and check valve.

It may be necessary to apply a slight amount of air pressure to the fluid outlet, to remove the piston and primary cup.

REAR MASTER CYLINDER

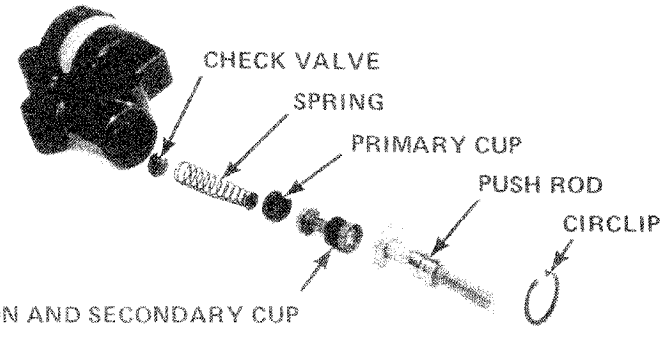

GL-1000 SHOP MANUAL
© 1978 American Honda Motor Co., Inc.
Printed in U.S.A. 7-78

MASTER CYLINDER INSPECTION

Measure the piston diameter. Inspect the condition of the primary and secondary cups.

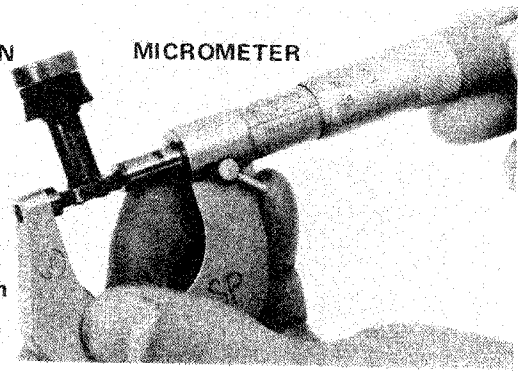

STANDARD:
13.957 TO 13.984 mm
SERVICE LIMIT:
13.940 mm

Measure the inside diameter of the master cylinder bore.

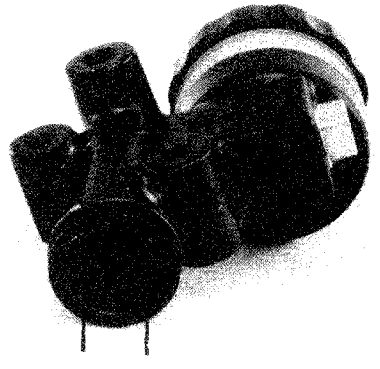

REAR MASTER CYLINDER BORE
STANDARD:
14.00 TO 14.043 mm
SERVICE LIMIT:
14.055 mm

MASTER CYLINDER ASSEMBLY

Coat all parts with clean brake fluid before assembly. Install the check valve on the spring. Install the spring and valve as a unit.

CAUTION

When installing the cups, do not allow the lips to turn inside out. Be certain the snap ring is seated firmly in the groove.

Install the primary cup and piston.

Install the pushrod and circlip.

Install the boot, nut and rod eye.

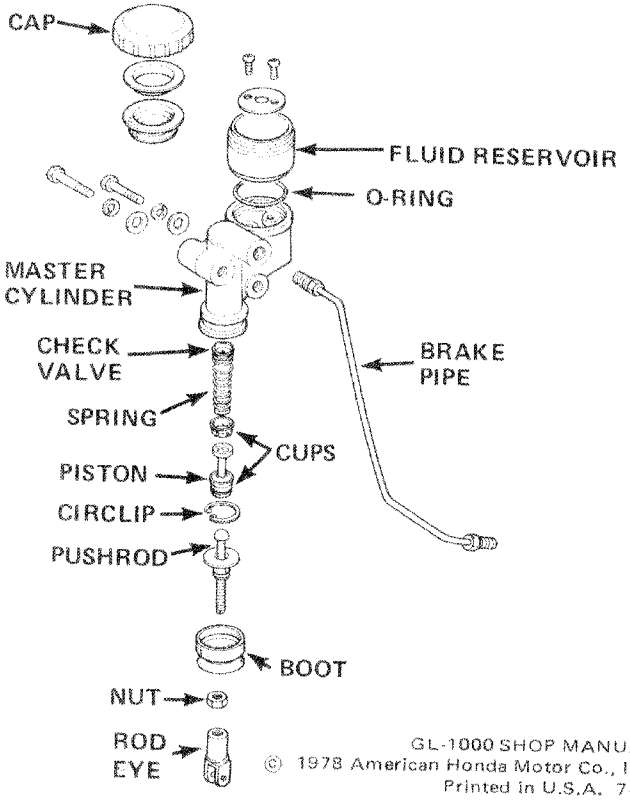

© 1978 American Honda Motor Co., Inc.
Printed in U.S.A. 7-78

Place the master cylinder in position on the motorcycle and install the mounting bolts, rod eye pin, washer and cotter pin. Then install the brake line.

Fill the reservoir to the upper level and bleed the brake system according to page 14-8.

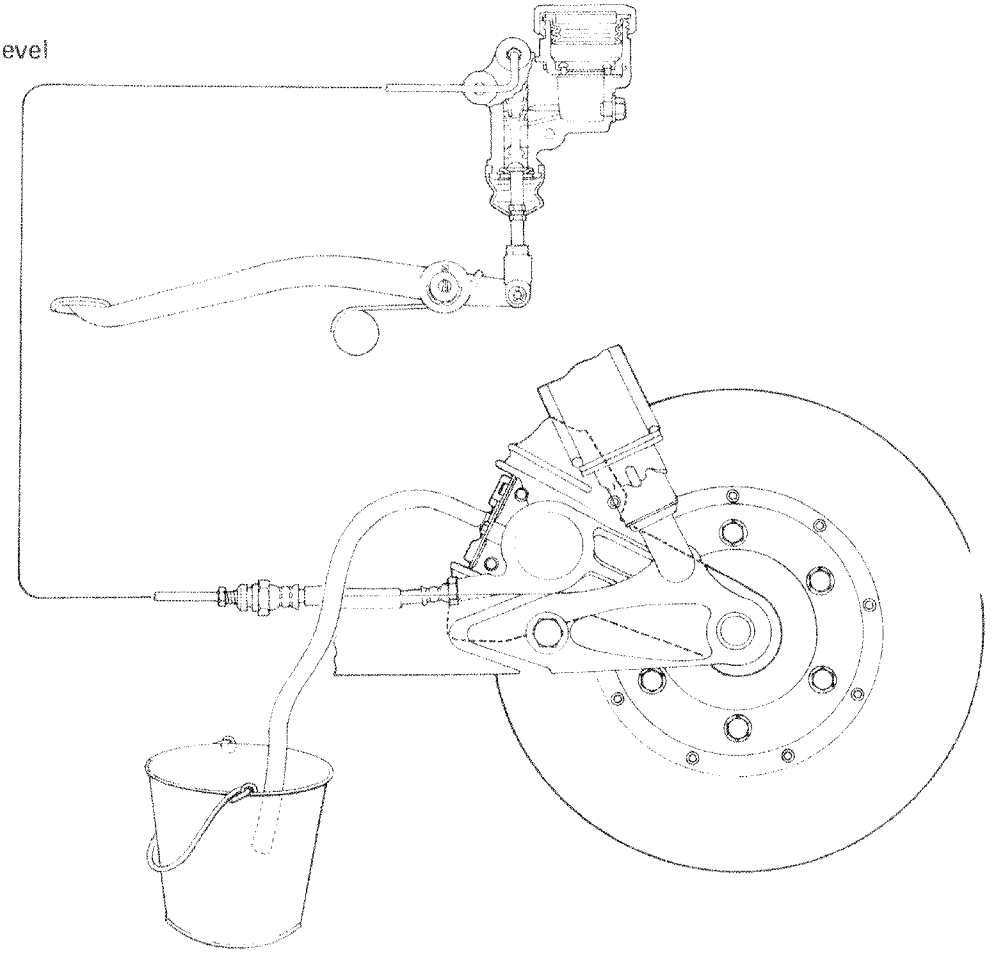

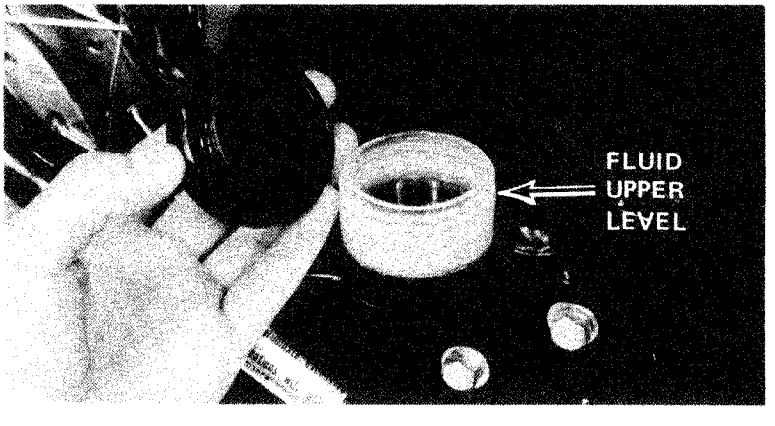

© 1976 American Honda Motor Co., Inc.
Printed in U.S.A. 7-78

BRAKE AND WHEEL ASSEMBLIES
WHEEL INSPECTION

1975 - 1977

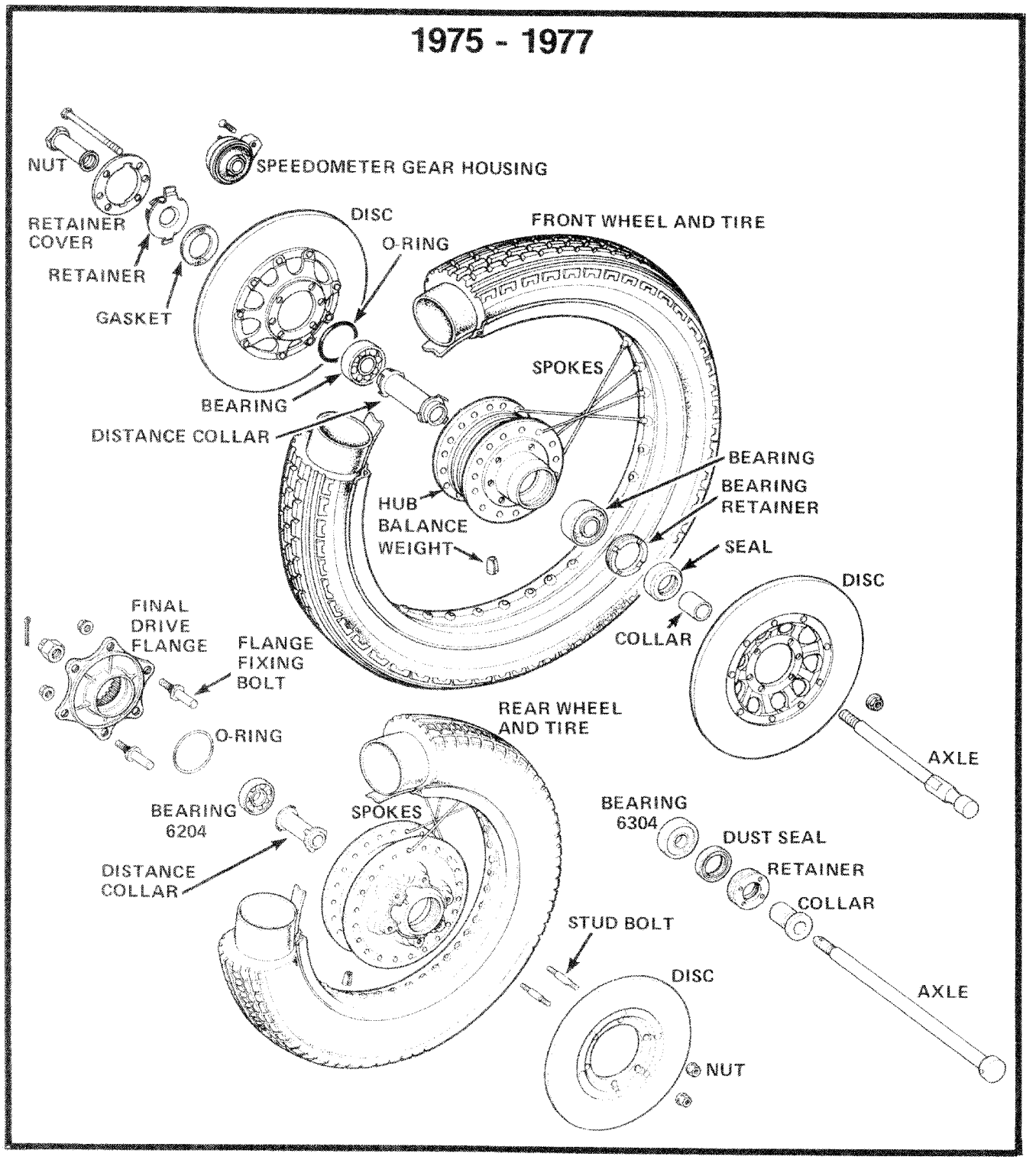

© 1978 American Honda Motor Co., Inc.
Printed in U.S.A. 7-78

1978 - 1979

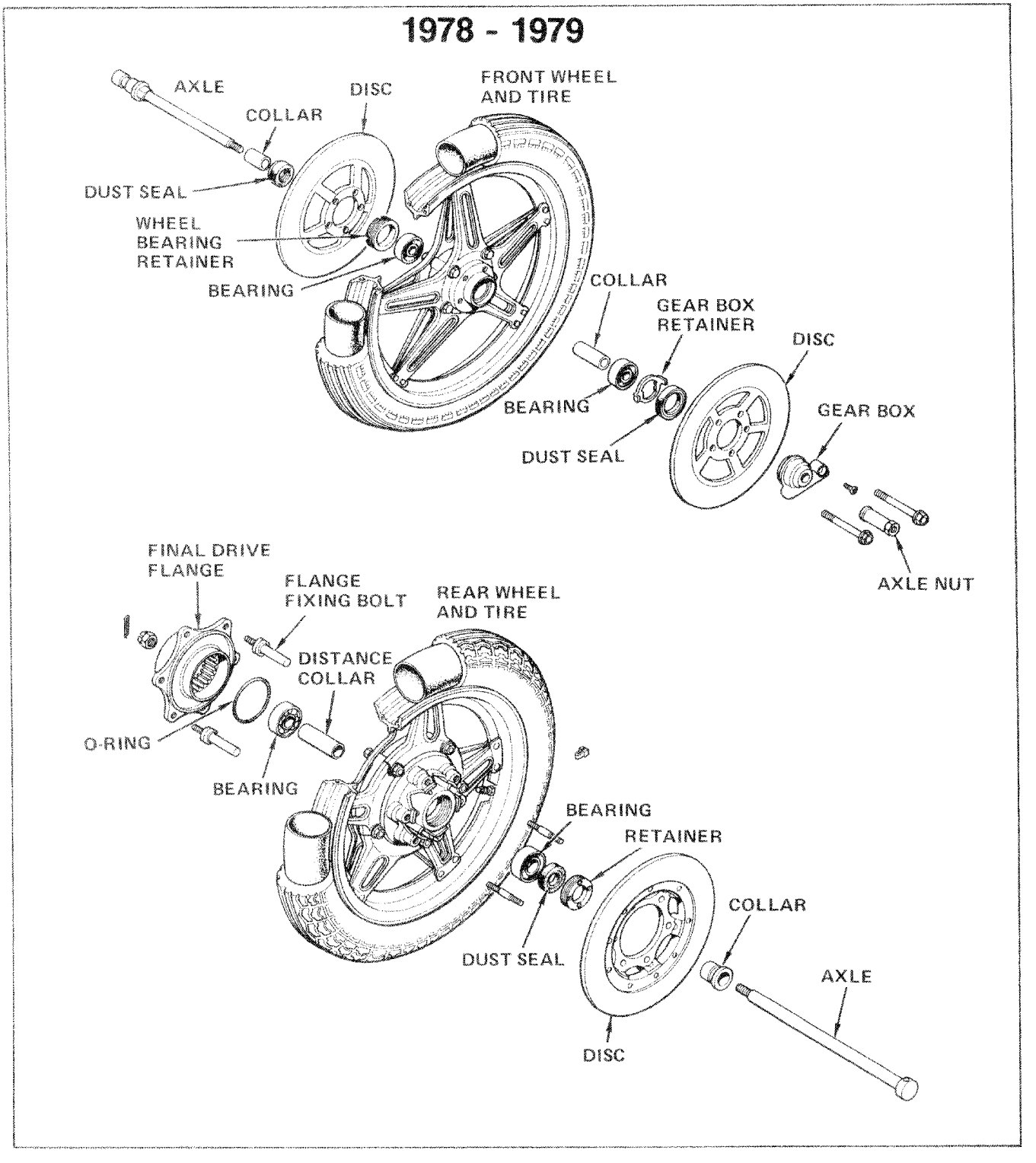

© 1978 American Honda Motor Co., Inc.
Printed in U.S.A. 7-78

WHEEL INSPECTION

Wire spoked wheels (1975 - 1977): Check the spokes for looseness. Replace any bent or broken spokes and tighten to specifications.

After tightening the spokes, spin the wheels and check to make sure that the wheel runout is within limits.

Check the rim for dents, nicks and sharp edges around the tire surface. Check the rim runout by placing the wheel in a truing stand. Then spin the wheel by hand, and read the runout by using a dial indicator gauge.

Check the wheel rim for visible damage. The ComStar wheel must be replaced if damaged or deformed.

Mount the wheel in a wheel inspection stand, as shown, to measure rim runout. It is not necessary to remove the tire. Using a dial indicator, measure both radial and axial runout while slowly rotating the wheel.

Unlike wire spoke wheels, the ComStar wheel runout cannot be adjusted. If either radial or axial runout exceeds 2.0mm (0.08 in), the wheel must be replaced.

WHEEL BALANCING

Before balancing the wheel assembly, check the tire mounting position. For optimum balance, the tire must be mounted on the rim with the tire balance mark (a paint dot on the tire side wall) next to the valve stem.

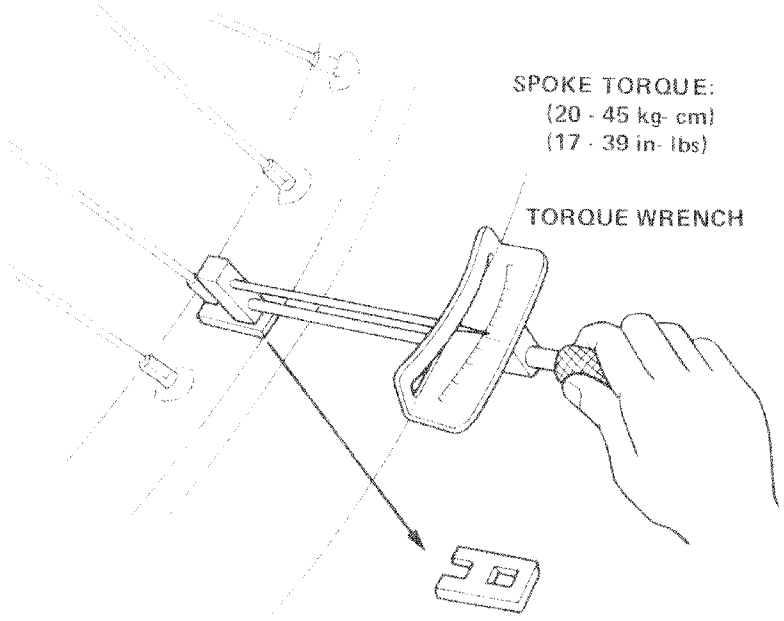

1975-1977

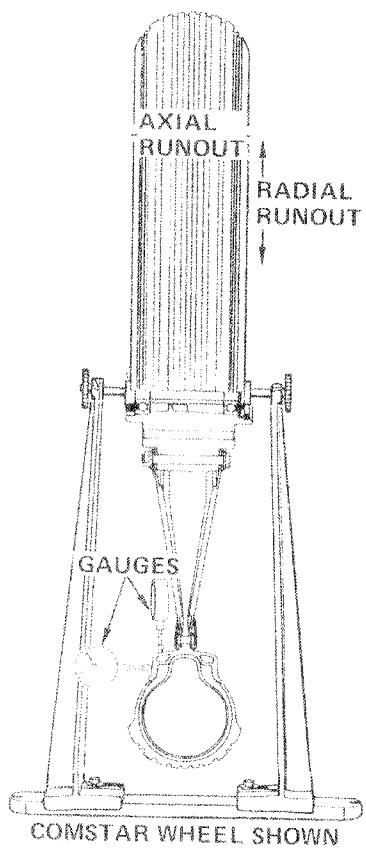

STANDARD RUNOUT
(1978-1979)
0 TO 1.0 mm (0 - 0.004 in)
(1975-1977)
0 TO 0.5 mm (0 - 0.002 in)
SERVICE LIMIT:
2.0 mm (0.08 in)

COMSTAR WHEEL SHOWN
1978-1979

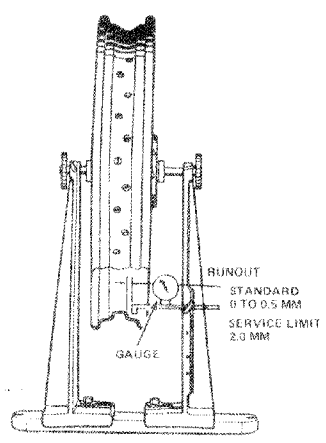

1975-1977

© 1978 American Honda Motor Co., Inc.
Printed in U.S.A. 7-78

Mount the complete wheel, tire, and brake disc assembly in a wheel inspection stand. If an inspection stand is not available, the wheel can be mounted on its axle and the axle clamped in a vise.

Spin the wheel, allow it to come to rest, then mark the lowest (heaviest) part of the wheel with chalk.

Repeat the spinning operation two or three times to verify the location of the heaviest area. If the wheel is properly balanced, it will not stop consistantly in the same position.

Balance the wheel by installing wheel weights. Install weights on the highest side of the rim, directly opposite the heavy spot you have marked after spinning the wheel. Install just enough balance weight so the wheel will no longer stop consistently in the same position when it is spun. Do not install more than 60 grams total weight.

WARNING

Wheel balance can affect the safety, stability, and handling of the motorcycle.

CAUTION

To prevent spoke damage, do not apply force to the spokes.

When a motorcycle equipped with ComStar wheels is loaded on a transportation vehicle, the wheels may be tied down, as shown, to secure the motorcycle. Place tie-down lines on rim only; do not place tie-down lines on spokes. If spokes are used as tie-down points, they may become bent, resulting in excessive wheel runout.

When changing tires, or at any other time when the wheel is removed and placed on the floor, do not step on the spokes.

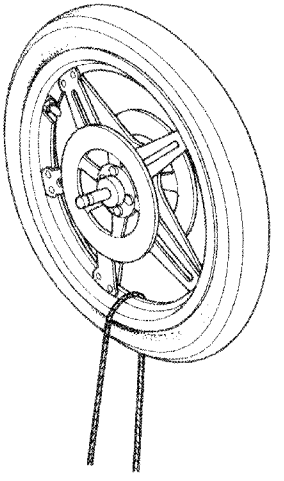

CORRECT WHEEL TIE-DOWN

NOTE

ComStar wheels cannot be removed and replaced. If the spokes, rim, or hub becomes damaged, the complete wheel assembly must be replaced.

The rear tire used on GL-1000 motorcycles with ComStar wheels is not interchangeable with rear tires used on prior GL-1000 models with wire spoked wheels.

Rim bands are not used beneath the inner tube on ComStar wheels. Rim bands are used only on wire spoked wheels in order to protect the inner tube from abrasion by wire spoke nipples.

© 1978 American Honda Motor Co., Inc.
Printed in U.S.A. 7-78

FRONT WHEEL DISASSEMBLY

Remove the front wheel according to page 13-8.

Remove the axle nut, speedometer gear box, axle and collar. Remove the six disc bolts, retainer cover, retainer and gasket. Then remove the disc. The right hand disc has an O-ring behind it, which fits around the hub.

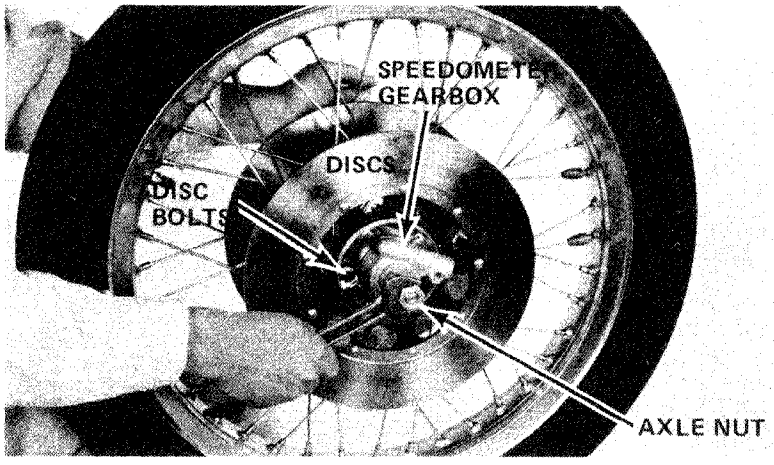

NOTE

If the bearings are removed, they should be replaced with new ones.

Remove the retainer using the special tool. Remove the bearings and the distance collar from the hub.

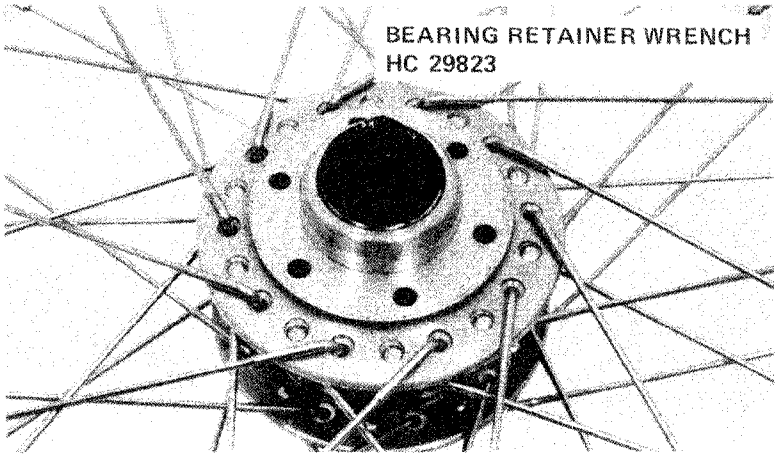

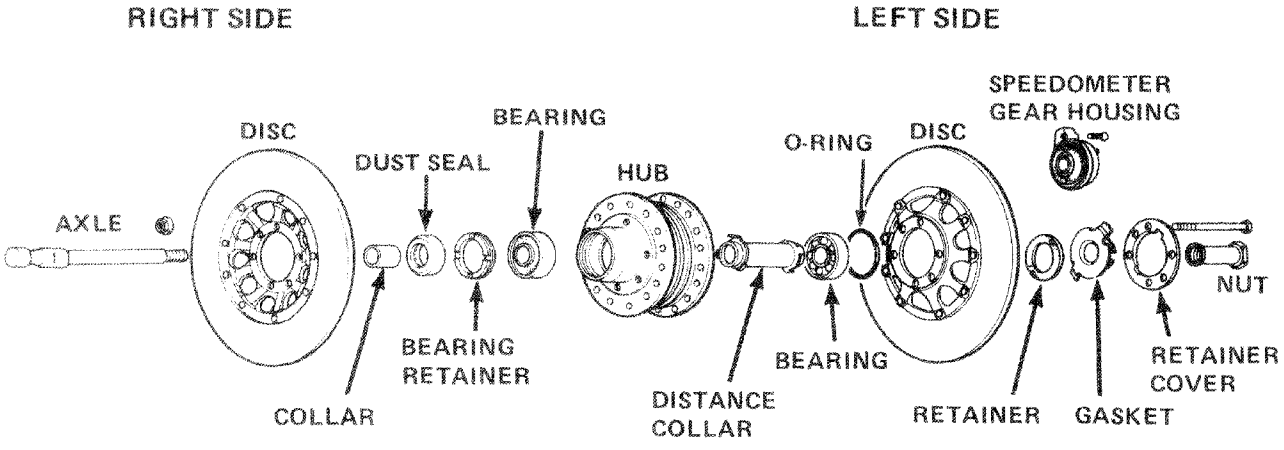

© 1978 American Honda Motor Co., Inc.
Printed in U.S.A. 7-78

REAR WHEEL DISASSEMBLY

Remove the rear wheel according to page 13-18.

Remove the rear disc. Remove the retainer using the special tool.

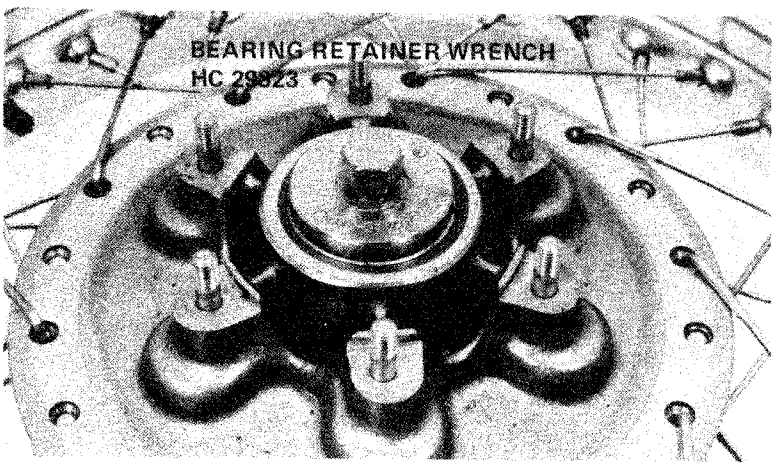

Remove the final drive flange by lifting it out of the hub. Then remove the bearings and distance collar.

NOTE

If the bearings are removed, new bearings must be installed.

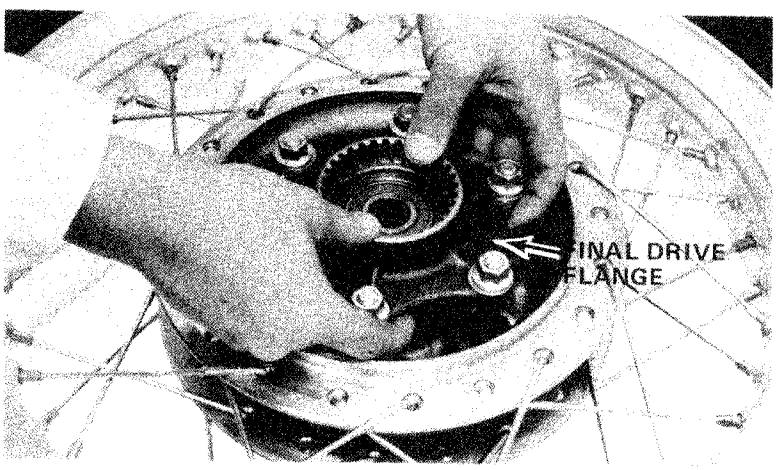

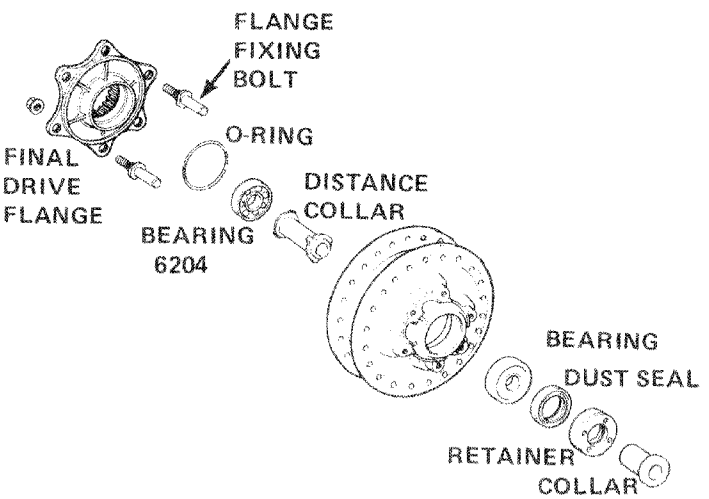

© 1978 American Honda Motor Co., Inc.
Printed in U.S.A. 7-78

AXLE INSPECTION

Set the axle in vee blocks, rotate and measure the runout.

NOTE: Inspect the bearings by hand. Rotate and feel for roughness or binding.

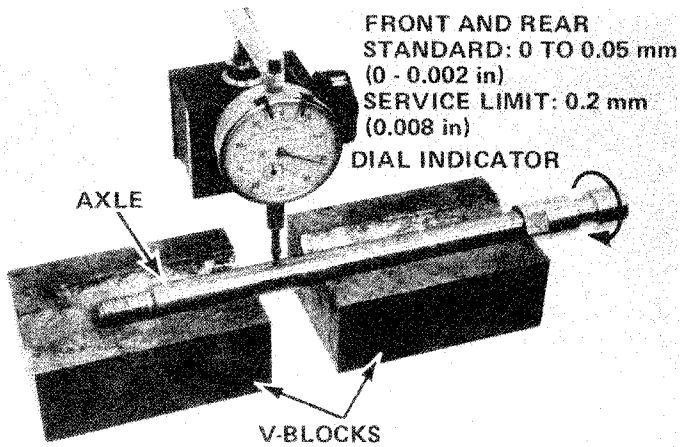

DISC INSPECTION

Hold the disc on a surface plate, set a dial indicator against the contact surface. Rotate the disc.

Measure the thickness of the front and rear discs using a micrometer.

Measure the thickness in the middle of the disc surface.

1975 - 1979
Rear Disc Thickness: 6.9 to 7.1 mm (0.2716 to 0.2795 in)
Service Limit: 6.0 mm (0.2362 in)
1975 - 1977
Front Disc Thickness: 5.9 to 6.1 mm (0.232 to 0.240 in)
Service Limit: 5.0 mm (0.1968 in)
1978 - 1979
Front Disc Thickness: 4.8 to 5.2 mm (0.189 - 0.205 in)
Service Limit: 4.0 mm (0.157 in)

Inspect the condition of the rear wheel damper bushings.

NOTE

Worn drive bushings will cause excessive drive system backlash.

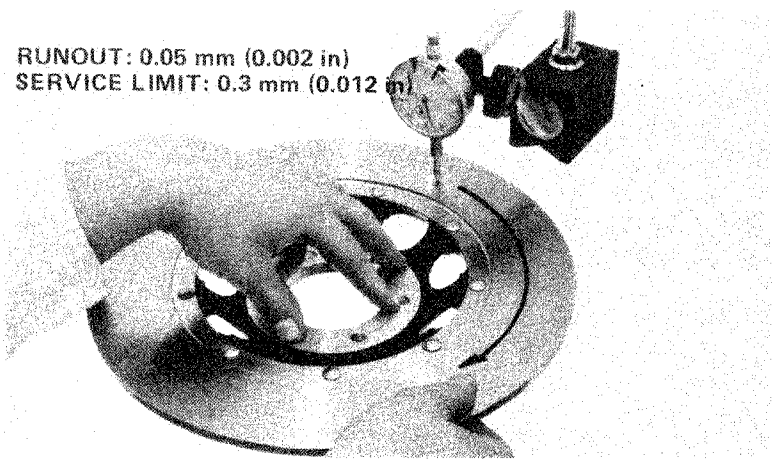

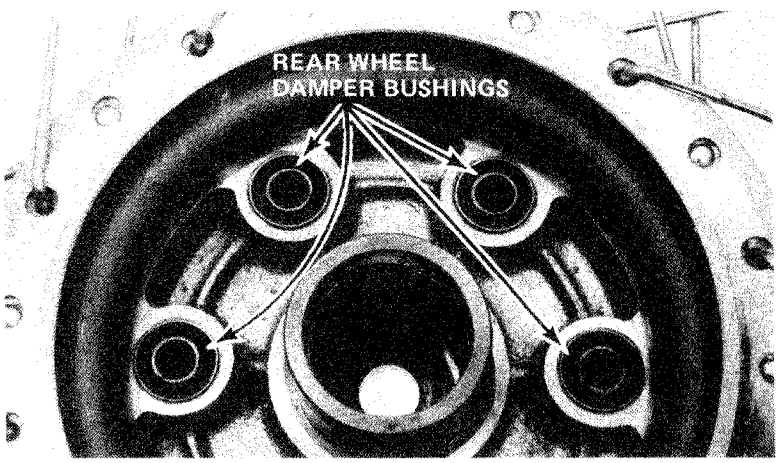

© 1978 American Honda Motor Co., Inc.
Printed in U.S.A. 7-78

FRONT WHEEL ASSEMBLY

Drive the bearing into position making sure that it is fully seated and that the sealed side is facing out.

NOTE

Be certain the distance collar is in position before installing the bearings.

Inspect the retainer. If the threads are damaged it should be replaced with a new retainer.

Install the bearing retainer with the same tool that was used to remove it.

Install the seal and the bearing retainer and peen the edge of the retainer. Install the o-ring around the right side of the hub, then install the disc, gasket, retainer, retainer cover and the disc bolts.

Install the left disc and disc nuts. Install the left side collar and axle.

Lubricate the speedometer gear box with NLGI-2 No. 2. Align the speedometer gear box tangs with the notches in the retainer. Then install the axle nut.

Axle Nut Torque: 55 to 65 kg-m (40 to 47 ft-lb)

Install the front wheel according to page 13-11.

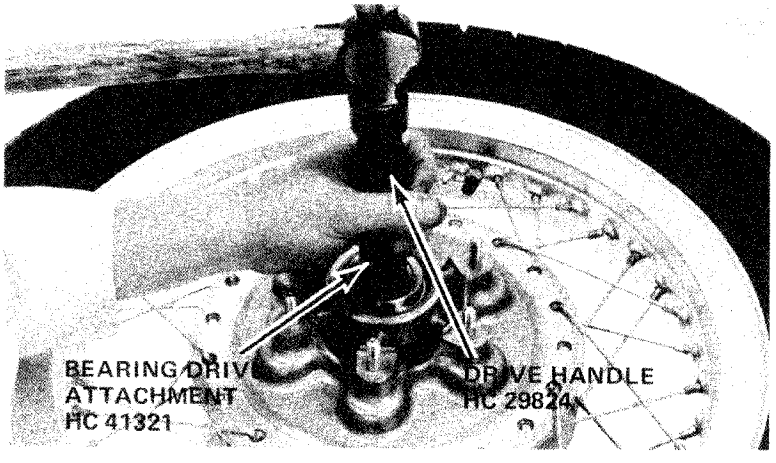

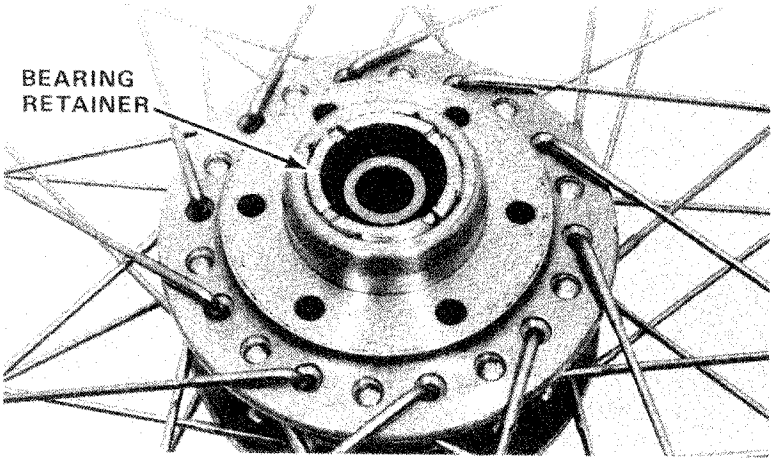

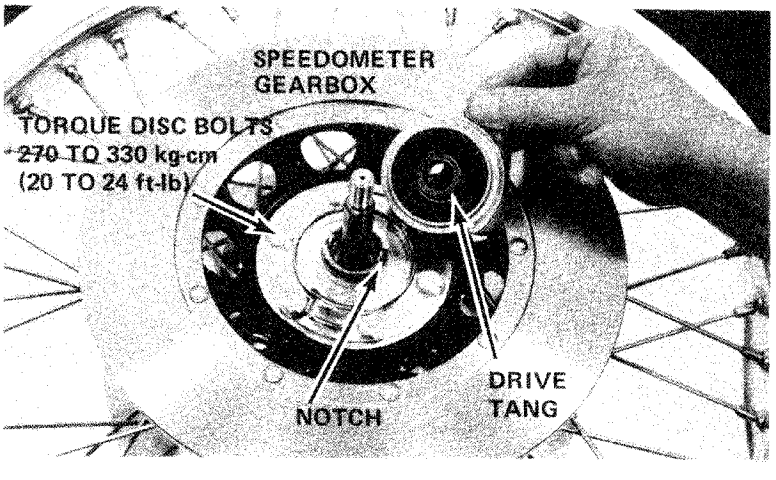

© 1978 American Honda Motor Co., Inc.
Printed in U.S.A. 7-78

REAR WHEEL ASSEMBLY

Position the distance collar in the wheel and install the bearing.

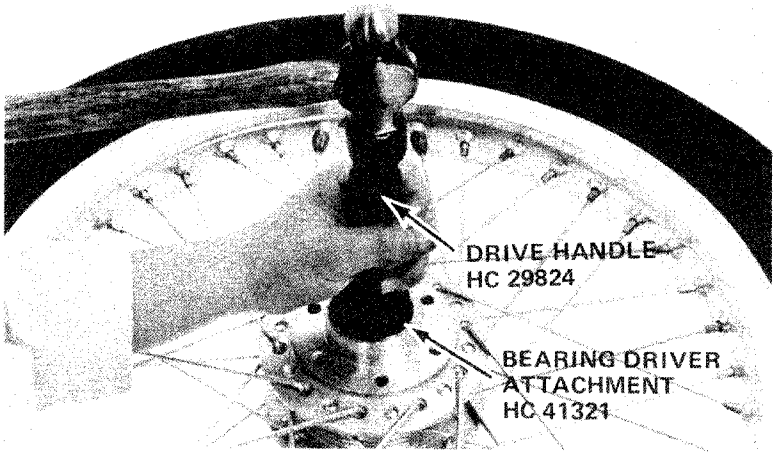

NOTE

Ensure that the sealed side of the bearing faces outward.

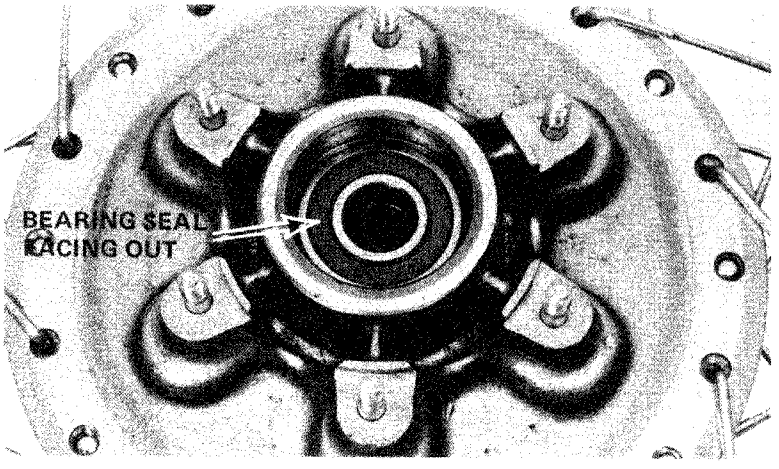

Check the condition of the bearing retainer. If the threads are damaged, the retainer should be replaced.

Install the bearing retainer with the same tool that was used to remove it. Peen it to the hub.

Install the brake disc and nuts.

Install the final drive flange and o-ring. Lubricate the flange splines with Multipurpose grease NLGI-2 (MOS_2 additives).

Install the rear wheel according to page 12-19.

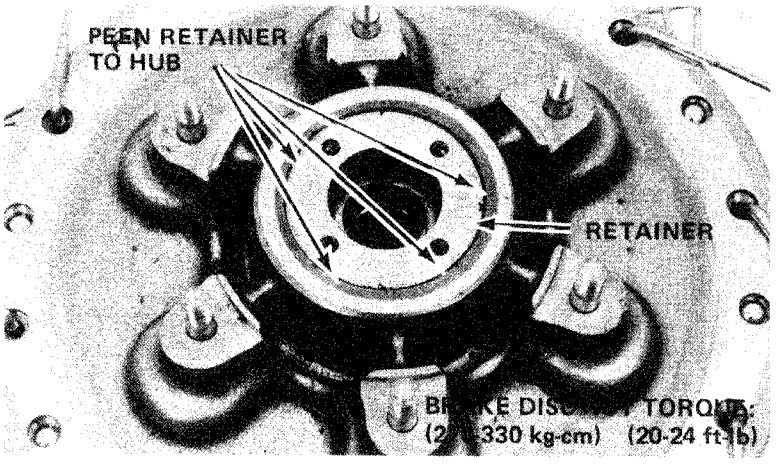

© 1978 American Honda Motor Co., Inc.
Printed in U.S.A. 7-78

SPEEDOMETER DRIVE

CAUTION

Be certain the lug on the speedometer drive is behind the lug on the fork leg to prevent the speedometer drive from rotating (1975 - 1977 models).

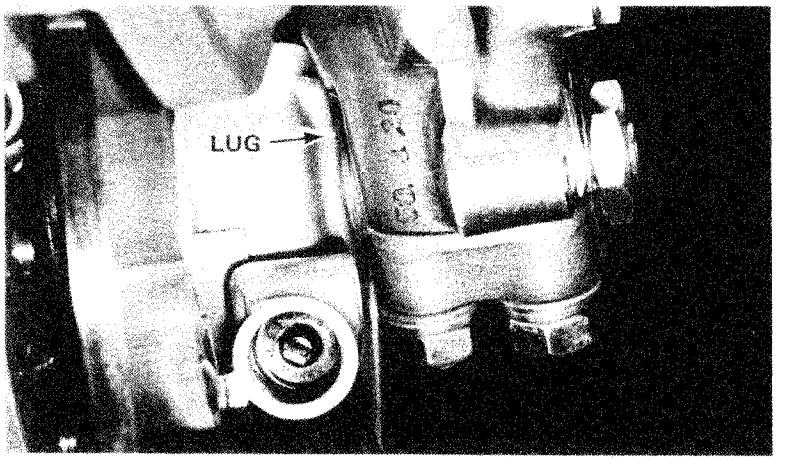

TIRES

Check the tire pressure frequently and adjust if necessary.

NOTE
The tire pressure should be checked when the tires are cold.

Up to 200 lb load psi (kg/cm^2)	Front: 28 (2.0) Rear: 32 (2.25)
Up to vehicle capacity load	Front: 28 (2.0) Rear: 40 (2.8)
Vehicle capacity load limit	360 lbs (163 kg)

Check the tires for cuts, imbedded nails, or other sharp objects. Replace the tires before the tread depth at the center of the tire reaches the following limit:

Center tread depth service limit
Front: 1/16 inch (1.5mm)
Rear: 3/32 inch (2.0mm)

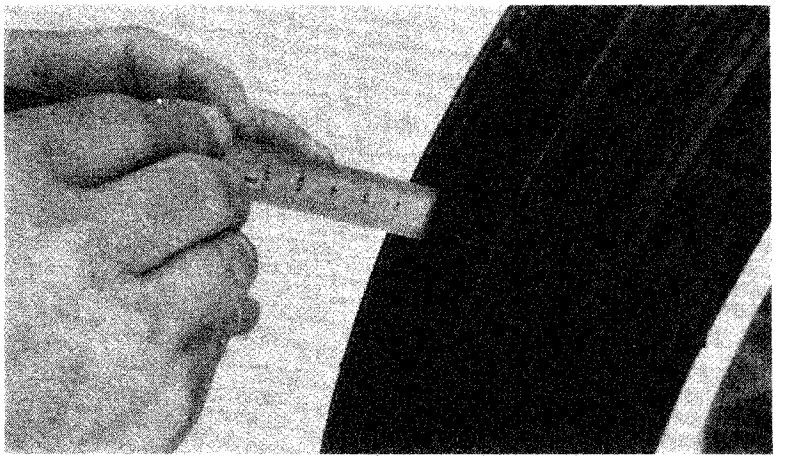

© 1978 American Honda Motor Co., Inc.
Printed in U.S.A. 7-78

WARNING

The rear tire used on GL-1000's with Comstar wheels (4.50H17) is not interchangeable with rear tires used on GL-1000 models with wire spoked wheels (4.50H17A) due to differences in bead dimensions. Possible damage to the tire or rim and tire slippage on the rim resulting in inner tube damage may occur.

NOTE
Rim bands are *not* used on Comstar wheels because the inner tube does not require protection on Comstar wheels. Rim bands are used only on wire spoked wheels to protect the inner tube from abrasion by wire spoke nipples.

GL-1000 75, 76, 77	
Tire size	Front: 3.50H19 Rear: 4.50H17A
Tire brand	Front: SUPER SPEED 21F2 (Bridgestone) F6 (Dunlop) Rear: SUPER SPEED 21R2 (Bridgestone) K87 (Dunlop)

GL-1000 78, 79	
Tire size	Front: 3.50H19 Rear: 4.50H17
Tire brand	Front: SUPER SPEED 21F2 (Bridgestone) F6 (Dunlop) Rear: SUPER SPEED 21R2 (Bridgestone) K87 (Dunlop)

© 1978 American Honda Motor Co., Inc.
Printed in U.S.A. 7-78

15
ELECTRIC STARTER

SERVICE INFORMATION 15-2
TROUBLESHOOTING 15-4
STARTER MOTOR 15-5
STARTER RELAY 15-8

© 1976 American Honda Motor Co., Inc.
Printed in U.S.A. 7-78

SERVICE INFORMATION

Specifications

Starter Motor
Type: 12 V gear-reduction electric motor
Drive: chain to generator shaft, gear to crankshaft
Rated Output: 0.8 kw (0.6 hp) for 30 sec. continuous

	Under Load	Locked
Voltage	8.5	5.0
Amperage	120	480 Max
Torque (minimum, sprocket shaft)	0.7 kg-m	3.0 kg-m
RPM (minimum, sprocket shaft)	750	0

Brush length: 12 to 13 mm (.47 - .51 in)
Service limit: 5.5 mm (0.216 in)

Brush Spring tension: 560 to 680 gr (19.7 - 24.0 oz)
Service limit: 400 gr (14.0 oz)

Torque Values

6mm case bolts: 100 to 140 kg-cm (87 - 122 in-lb)
6mm washer-head bolts for generator bearing holder:
100 to 140 kg-cm (87 - 122 in-lb)

Working Practice

The starter motor can be removed and installed with the engine in the frame. However, to service the starter clutch, the engine must be removed from the frame.

Tools and Materials

Volt-ohmmeter
Continuity tester
Spring pull scale

Torque wrench 0-350 kg-cm (0-300 in-lb)
Torque wrench 0-25 kg-m (0-150 ft-lb)

© 1976 American Honda Motor Co., Inc.
Printed in U.S.A. 7-76

ELECTRIC STARTER SERVICE INFORMATION

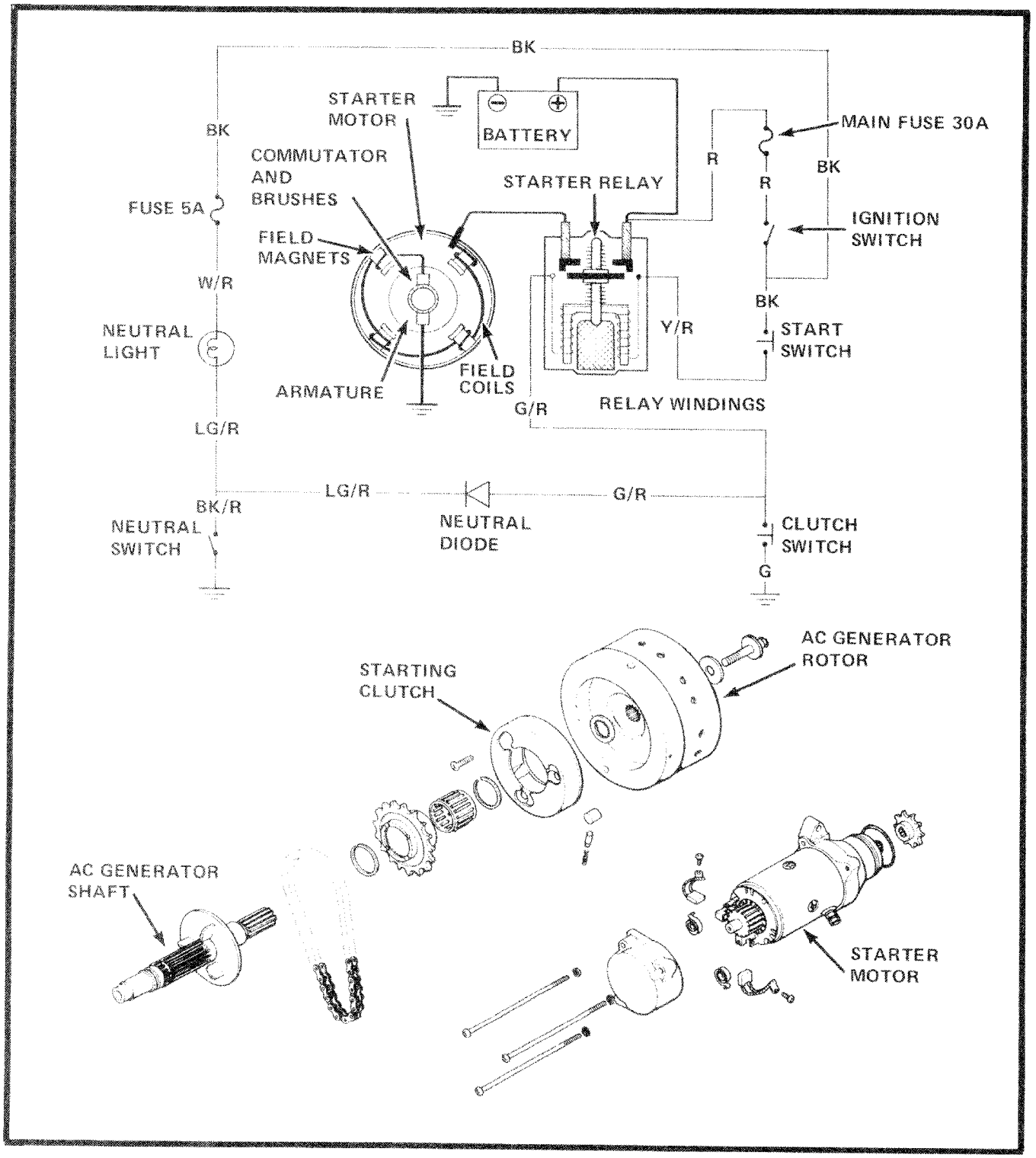

© 1976 American Honda Motor Co., Inc.
Printed in U.S.A. 7-78

TROUBLESHOOTING

Starter Motor Will Not Turn:

1. Dead battery
2. Defective ignition switch
3. Defective start switch
4. Defective neutral switch
5. Defective starter relay
6. Loose or disconnected wire or cable
7. Neutral diode open

Starter Motor Turns Engine Slowly:

1. Low battery
2. Excessive resistance in circuit
3. Binding in starter motor, drive chain, or drive system

Starter Motor Turns, But Engine Does Not Turn:

Failure in:

1. Drive chain or sprockets
2. Drive shaft or overrunning clutch
3. Starter motor planetary gears
4. AC Generator drive gears

Starter Motor and Engine Turn, But Engine Does Not Start:

1. Engine problems

Engine Kicks Back on Starting:

1. Improper ignition timing

© 1976 American Honda Motor Co., Inc.
Printed in U.S.A. 7-78

STARTER MOTOR

Removal

WARNING

With the ignition switch OFF, remove the negative cable at the battery before servicing the starter motor.

Remove the left exhaust pipe, rear mounting stud, and shift lever and disconnect the battery cable at the starter terminal.

Remove the two starter mounting bolts and pull the motor out of the engine case. The sprocket will stay in the housing.

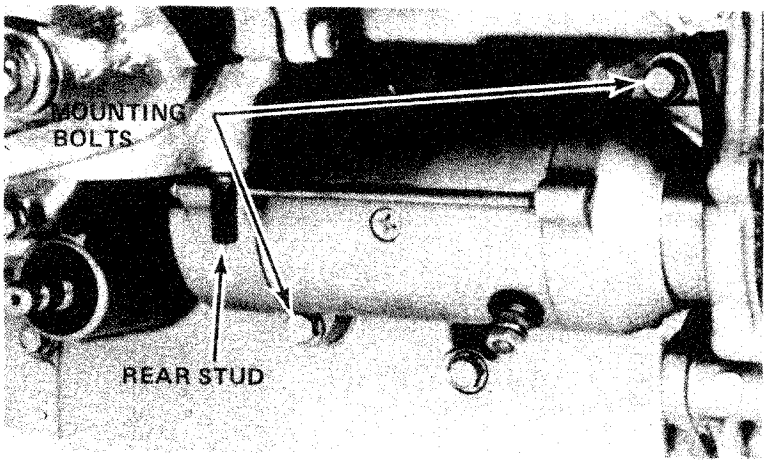

Brush Inspection

Remove the starter motor case screws and the brush cover.

Inspect the brushes; measure brush length. Measure brush spring tension with a spring scale.

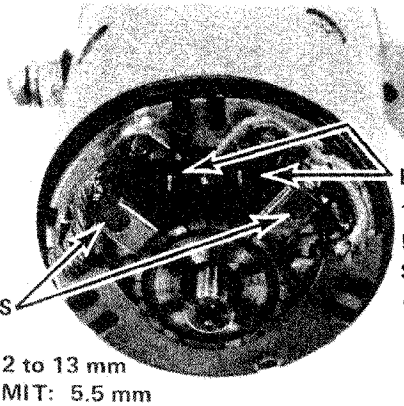

Armature Removal

Remove the armature from the gear end of the motor case.

NOTE

Look for spacers on the armature shaft ends. Replace them in proper position.

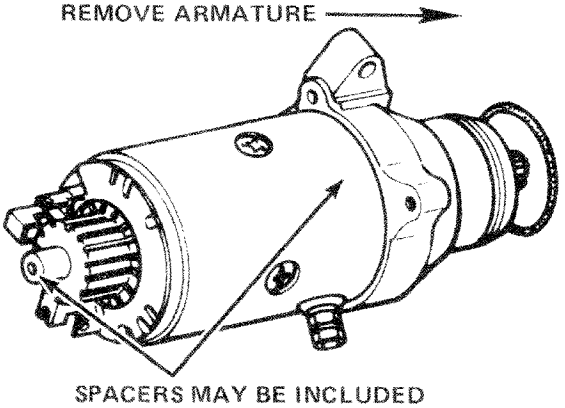

© 1976 American Honda Motor Co., Inc.
Printed in U.S.A. 7-78

Commutator Inspection

Measure the diameter of the commutator and height of the segments above the insulation.

If the insulation is less than minimum distance below the surface, it can be undercut with a thin saw blade.

Inspect the commutator bars for discoloration. Edge discoloration indicates high insulation.

Bars discolored in pairs indicate grounded or open armature coils.

NOTE

Do not use emory or sand paper on the commutator.

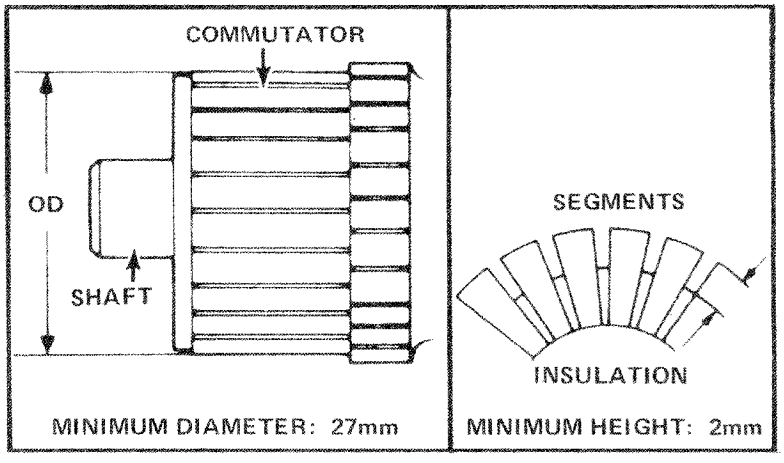

Check for continuity between pairs of commutator bars, and also between commutator bars and armature shaft.

Replace starter motor if armature coils are open, or shorted to armature shaft.

Field Coil Inspection

Check for continuity from the cable terminal to the motor case and from the cable terminal to the brush wire.

Replace starter motor if the field coil is not continuous or if it is shorted to the motor case.

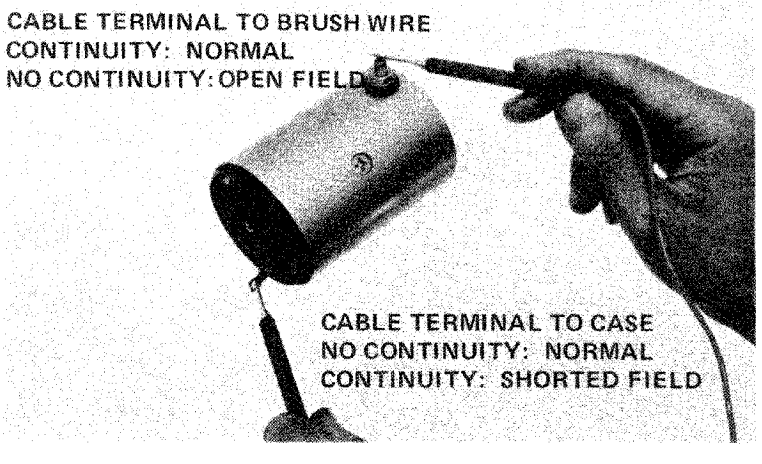

© 1976 American Honda Motor Co., Inc.
Printed in U.S.A. 7-78

ELECTRIC STARTER
STARTER MOTOR

Assembly and Installation

Install the armature into the case, being careful not to damage the brushes. Install the commutator cover and the case through bolts.

Install the starter motor into the engine, sliding the drive splines into the splines of the sprocket.

Install the mounting bolts.

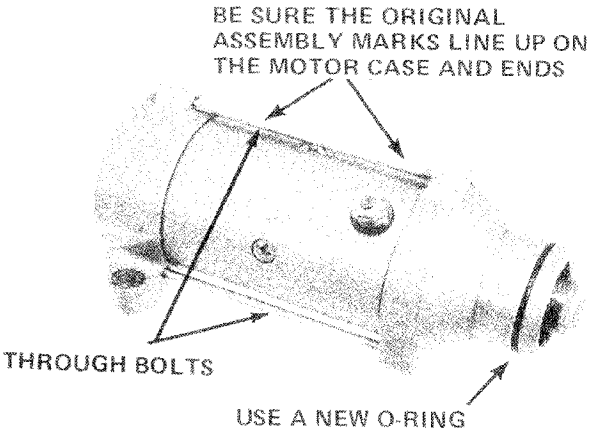

RECONNECT the battery cable at both ends. With the engine STOP switch OFF, test the starter for proper operation.

RE-INSTALL the shift lever, exhaust stud and exhaust pipe.

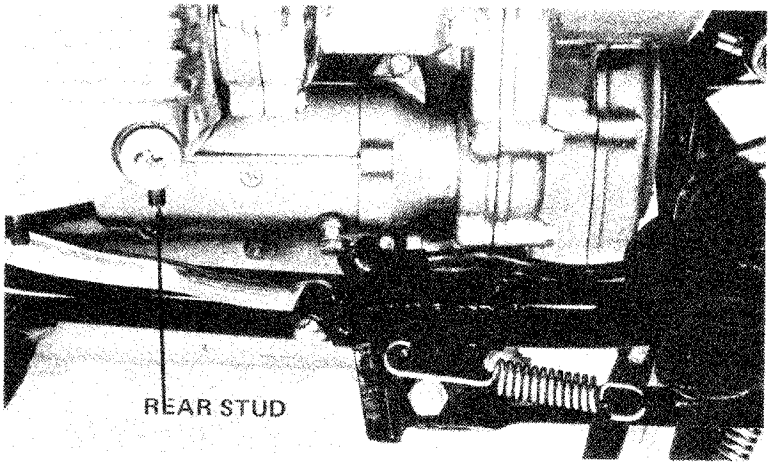

Starter Clutch Inspection

NOTE

To inspect or service the starter clutch, the AC generator must be removed after the engine has been removed from the frame (See Section 4).

Remove the three rollers from the assembly and inspect them for flat spots. See that they move freely up and down their ramps. (See Section 14).

NOTE

Worn or corroded rollers will often cause the starter to spin without rotating the engine, or emit a loud screeching noise as the engine is being rotated.

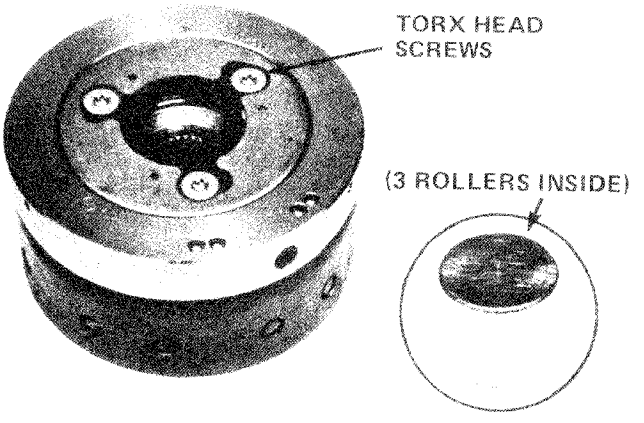

STARTER RELAY

Removal

WARNING
Before removing starter relay, disconnect the negative battery cable from the battery.

Unplug the two small primary wires at the connectors.

Remove the two cables and the large lead from the relay terminals, and take the relay out of the battery case.

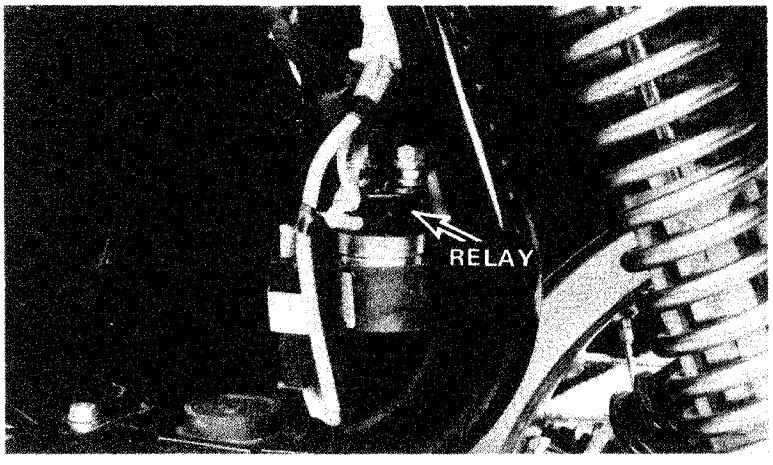

Inspection

(Can be done with relay installed)

With an ohmmeter, test the primary windings for correct resistance.

Also test for shorts from either primary lead to the relay case.

Replace the relay if the primary coil has an open circuit, shorted coils, or is shorted to the case.

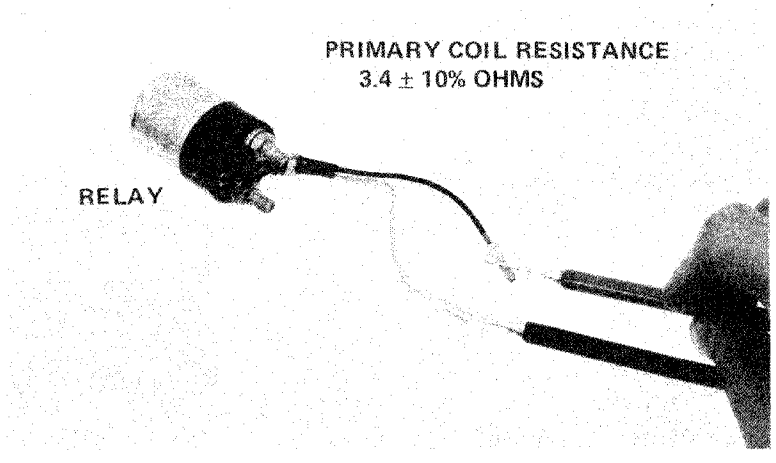

Connect 12-volt source across primary leads. Relay should make an audible click.

Test for continuity across the large terminals when the relay is energized. If there is any resistance, the relay must be replaced.

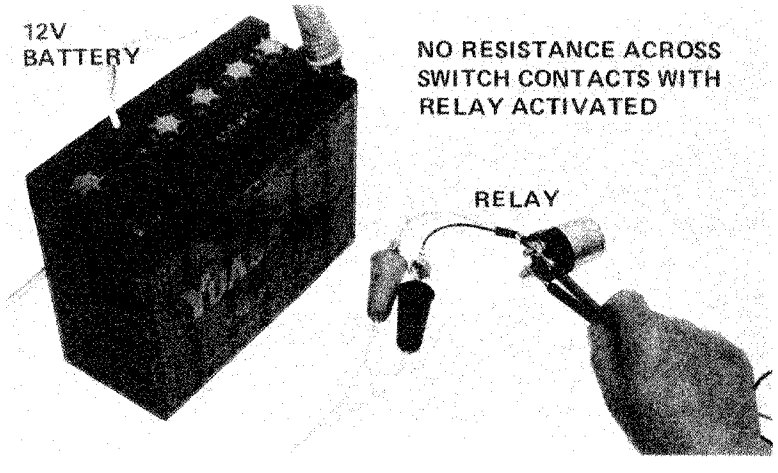

© 1976 American Honda Motor Co., Inc.
Printed in U.S.A. 7-78

16
IGNITION

SERVICE INFORMATION 16-2
TROUBLESHOOTING 16-4
IGNITION COILS 16-5
BALLAST RESISTOR 16-5
SPARK ADVANCE MECHANISM 16-6
CAPACITOR 16-6

© 1978 American Honda Motor Co., Inc.
Printed in U.S.A. 7-78

SERVICE INFORMATION

Specifications

Ignition coil: Toyo Denso

Ballast resistor: 3.0 ohms ± 10%

Spark Plugs: For cold climate . . . . . NGK D7EA or ND X22ES-U
Standard . . . . . NGK D8EA or ND X24ES-U
For extended high speed operation . . . . . NGK D9EA or ND X27ES-U

Spark Plug Gap: 0.6 to 0.7mm (0.024 to 0.028 in)

Contact Breaker Points: Dual Toyo Denso
Point Gap: 0.3 to 0.4mm (0.012 to 0.016 in)
Point Spring Tension: 650 to 850 grams (1.4 to 1.9 lb)

Condenser capacity: 0.24 MF ± 10%
Condenser insulating resistance: 5 M Minimum

Timing marks:
F-1: indicator for cylinders 1 and 2
F-2: indicator for cylinders 3 and 4

Ignition timing:
"F" Mark (for static or idle speed timing):
5° BTDC (1975-1977); 10° BTDC (1978-1979)
Full Advance Mark: 37° BTDC
Advance Starts: 1,450 rpm
Maximum Advance: 2,600 rpm

Torque Values

Spark plugs: 120 to 190 kg-cm (104 to 165 in-lb) (9 to 14 ft-lb)

Working Practice

Be sure that the battery is fully charged before diagnosing the ignition system.

Tools and Materials

Blade feeler gauge
Wire gap gauge
Screwdriver
Phillips screwdriver
Ignition service tester
Continuity tester
Timing light
Spring scale

© 1978 American Honda Motor Co., Inc.
Printed in U.S.A. 7-78

IGNITION
SERVICE INFORMATION

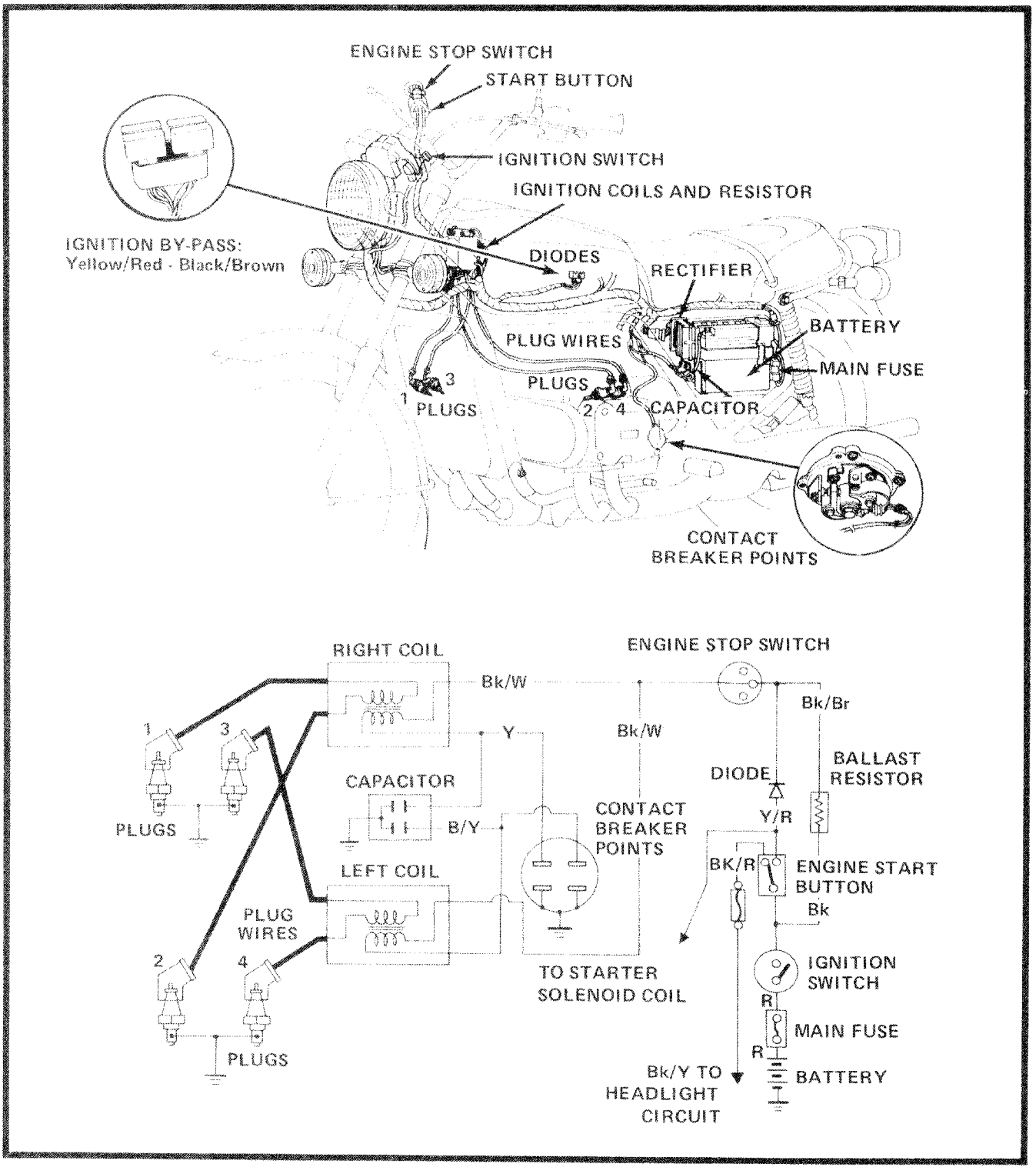

© 1976 American Honda Motor Co., Inc.
Printed in U.S.A. 7-78

TROUBLESHOOTING

Engine Cranks but Will Not Start:

1. Engine stop switch OFF
2. No spark at plugs
3. Improper ignition timing
4. Plugs fouled
5. Plug wires crossed
6. Open ignition diode

No Spark at Plugs:

1. Engine stop switch OFF
2. Points not opening
3. Points burned, wet, fouled or dirty
4. No primary current to points and coils
   a. Loose or broken wire
   b. Low battery, low charging voltage
   c. Defective ignition switch
   d. Defective start button
   e. Defective engine stop switch
   f. Defective ignition diode
5. Defective plug wires
6. Coils weak or inoperative
7. Defective capacitor

Engine Starts but Dies:

1. Open ballast resistor

Engine Starts but Runs on Two Cylinders:

1. One coil weak or inoperative
2. One set of points burned, grounded, or not opening
3. Defective capacitor
4. One plug wire loose or disconnected

Engine Starts but Runs Poorly:

1. Ignition primary circuit
   a. Points dirty or fouled
   b. Incorrect point gap
   c. Weak or defective coil
   d. Defective capacitor
   e. Loose or bare wire
   f. Intermittent short-circuit in a switch
2. Ignition secondary circuit
   a. Plugs fouled or worn
   b. Defective or crossed plug wires
3. Ignition timing
   a. Improper ignition timing
   b. Defective advancer mechanism
4. Low battery, low charging voltage (refer to Section 14)

Engine Kicks Back When Starting or Backfires When Running:

1. Improper ignition timing

© 1976 American Honda Motor Co., Inc.
Printed in U.S.A. 7-78

IGNITION COILS

Removal

Open the service compartment left side cover for access to coils.

Disconnect all the wires to the coils. Remove the coil mounting bolts on the main frame downtube.

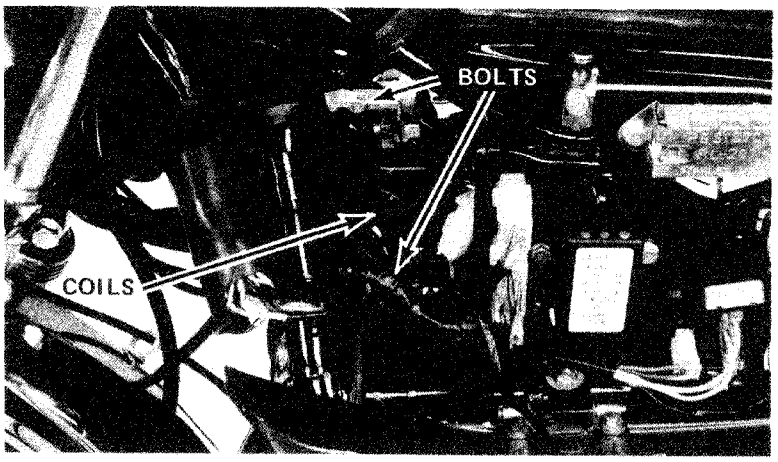

Coil Performance Test

Check the coil output on an electrical tester. Follow the instructions supplied with the tester for specific procedures.

Make connections with the ballast resistor in the circuit as shown.

Set the tester to ignition test, dial out the electrodes and observe the spark gap.

Check the output of the remaining coil by switching all coil leads. Repeat the spark gap test.

WARNING

Use caution during coil performance tests. High voltage is present and may cause shocks.

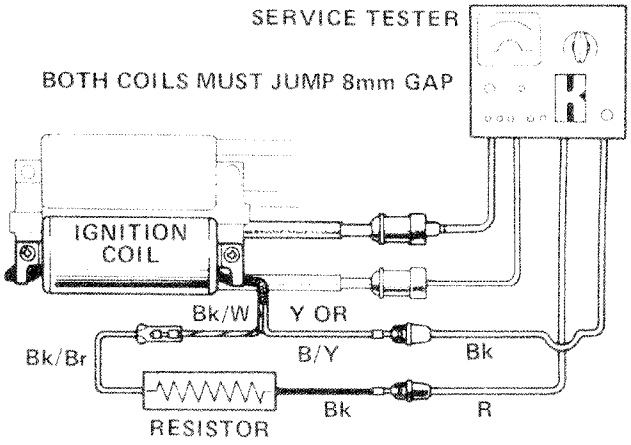

BALLAST RESISTOR

Inspection - Zero the ohmmeter and test resistance.

If the resistance between Bk and Bk/Br leads is incorrect, replace the ballast resistor.

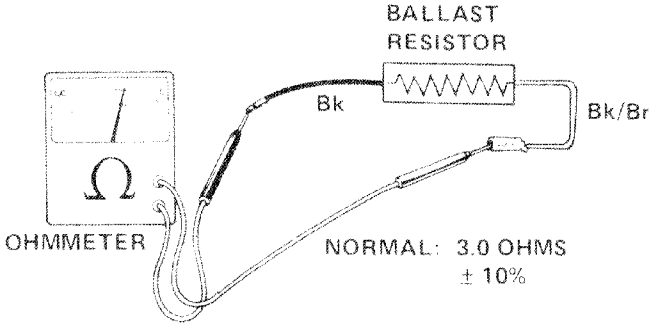

© 1978 American Honda Motor Co., Inc.
Printed in U.S.A. 7-78

SPARK ADVANCE MECHANISM

Inspection

Remove the point cover.

Remove the two point base plate screws and remove the point plate assembly.

Rotate the contact point cam. Check freedom of motion. The spring pressure should return the cam to the static position.

Reinstall the point base plate.

Do not lubricate the spark advance mechanism.

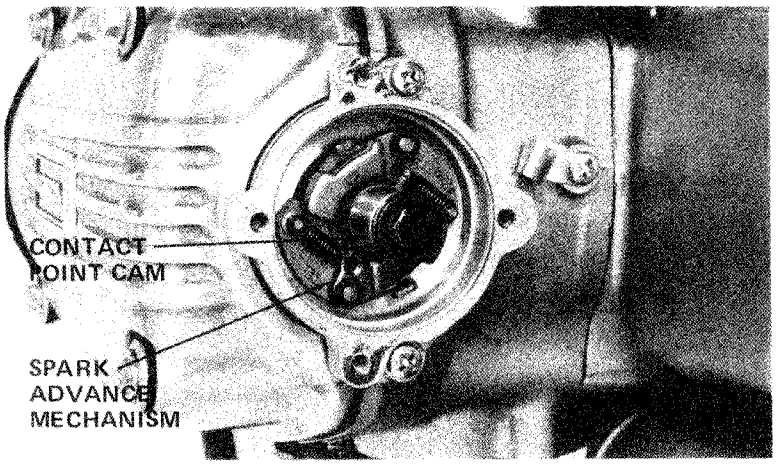

CAPACITOR

The capacitor, located on the front of the battery frame, may be tested without removing it from the motorcycle.

NOTE

It may be necessary to remove the battery and the battery frame to remove the capacitor.

Check capacitance on an electrical tester. Follow the instructions with the tester for specific procedures.

NOTE

The capacitor has two separate circuits.

Switch tester lead to the remaining capacitor lead and measure second capacitance.

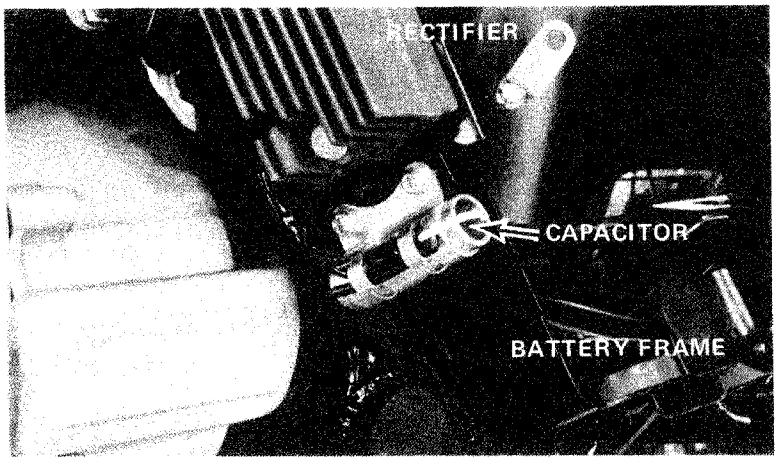

© 1978 American Honda Motor Co., Inc.
Printed in U.S.A. 7-78

17 LIGHTS, SWITCHES, AND INSTRUMENTS

SERVICE INFORMATION 17-2
TROUBLESHOOTING 17-7
SWITCHES 17-9
DIODES 17-12
INSTRUMENTS 7-13
HEADLIGHT AND TAIL LIGHT BULB REPLACEMENT 17-19
RESERVE LIGHTING SYSTEM 17-20
HORN, FUSES, AND WIRING 17-24
1975-1977 WIRING DIAGRAM 17-27
1978-1979 WIRING DIAGRAM 17-28

© 1978 American Honda Motor Co., Inc.
Printed in U.S.A. 7-78

SERVICE INFORMATION

Specifications

Bulbs (12 volt)

Headlight, tungsten incandescent	40/50W (1975 - 1977); 55/60W (1978)		
Tail/stop light	SAE 1157	3/32 CP	8/27W
Running/front turn-signal lights	SAE 1034	3/32 CP	8/23W
Rear turn-signal lights	SAE 1073	32 CP	23W
Instrument and indicator lights	SAE 57	2 CP	3.4W

Fuses:

Main (battery)	30A
Headlight	10A
Tail/instrument lights	5A
Parking (tail light)	5A
Oil/temp/neutral/fuel	5A
Horn/stop/turn	15A

Ignition switch functions:

LOCK: The steering is locked. All electrical circuits are off. Engine cannot be started. The key can be removed.

OFF: All electrical circuits are off. Engine cannot be started. The key can be removed. Steering is not locked.

ON: Electrical circuits are on. Headlight, tail light, running lights and instrument lights are on; other lights can be operated. The engine can be started. The key cannot be removed.

PARK: The tail light is on but all other circuits are off. The key can be removed.

Oil pressure warning switch:

Light on at pressures below 0.2 kg/sq-cm (3 psi)
Light out at 0.2 to 0.4 kg/sq-cm (3 to 6 psi)

Thermostatic fan switch - 7 volt rating:

Fan on at 98 to 102°C (208 to 216°F)
Fan off at 93 to 97°C (199 to 207°F)

Auxiliary voltage regulator for temperature and fuel gauge:

Input 12 volts
Output 7 volts

GL-1000 SHOP MANUAL
© 1978 American Honda Motor Co., Inc.
Printed in U.S.A. 7-78

LIGHTS, SWITCHES, AND INSTRUMENTS SERVICE INFORMATION

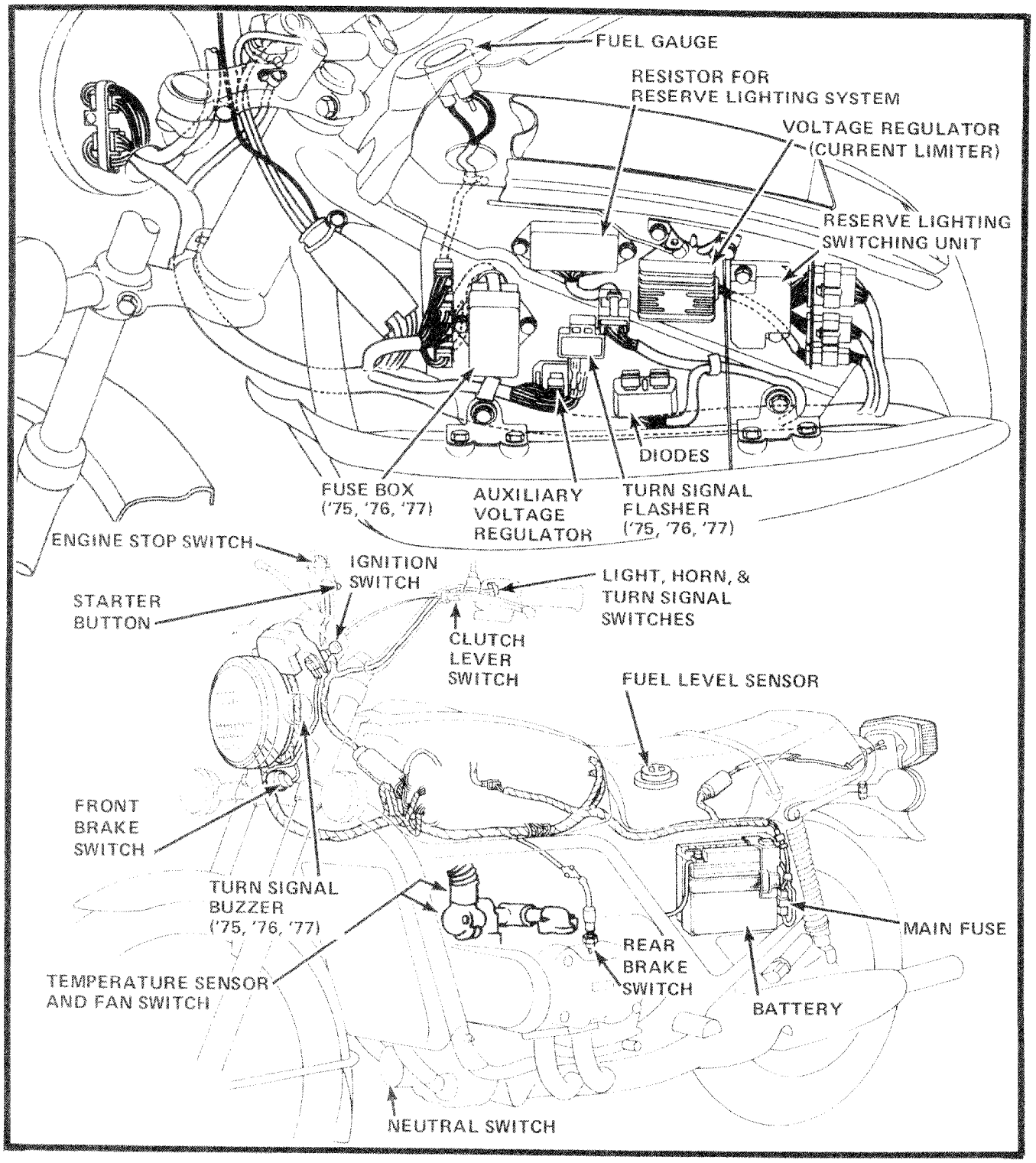

© 1976 American Honda Motor Co., Inc.
Printed in U.S.A. 7-78

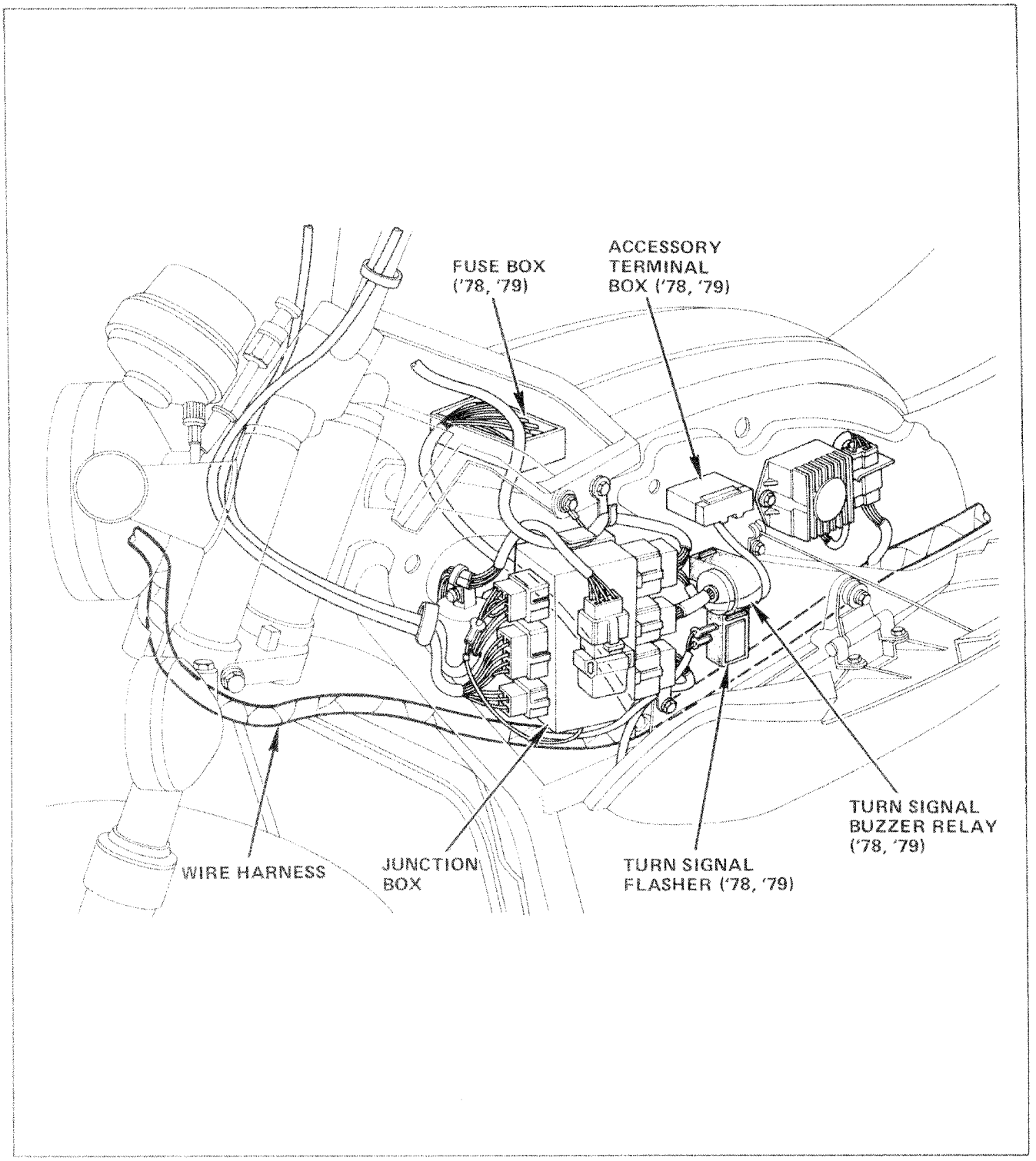

© 1978 American Honda Motor Co., Inc.
Printed in U.S.A. 7/78

LIGHTS, SWITCHES, AND INSTRUMENTS SERVICE INFORMATION

Temperature gauge:

Operating voltage: 7 volts

Temperature Sensor Resistances:

Ohms	Test Temperature
104.0	60°C (140°F)
43.9	85°C (185°F)
20.3	110°C (230°F)
16.1	120°C (248°F)

Fuel gauge:

Operating voltage: 7 volts
Sensor resistance: 70-90 ohms at bottom of travel (empty)
Sensor resistance: 3-10 ohms at top of travel (full)
Gauge resistance: 65-75 ohms (empty)
Gauge resistance: 10-15 ohms (full)

Turn signal flasher:

Cycle 60 to 120 times per minute and provide lamp terminal voltage of 11.4 to 14.5 volts when ambient temperature is 18.4 to 19.4°C (65 to 67°F)

Turn signal buzzer:

Operates when turn signal switch is locked in full left or full right position and ignition switch is on.

Reserve lighting resistor:

Pink to Blue - 1.9 ohms
Black/Blue to Green/Yellow - 3.3 ohms

Reserve Lighting Unit

Black/Yellow to Blue/White - 0 ohms
Brown/Blue to Blue/Brown - 0 ohms
Green/Yellow to Yellow/Green - 0 ohms

Torque Values

Oil pressure warning switch 150 to 200 kg-cm (130 to 173 in-lb)
Front brake stop switch 200 to 250 kg-cm (173 to 216 in-lb)
Thermostatic fan switch 240 to 320 kg-cm (208 to 277 in-lb)
Temperature sensor 100 to 140 kg-cm (87 to 121 in-lb)
Tail light lens attaching bolts 50 to 70 kg-cm (43 to 60 in-lb)

© 1978 American Honda Motor Co., Inc.
Printed in U.S.A. 7-78

Working Practice

All electrical wires and connectors are color-coded. When two or more different colored wires are connected, a colored tube that matches the major color of the other wire appears on the wire near the connector. Observe the color codes before disconnecting any wires. All plastic plugs have locking tabs that must be released before disconnecting, and must be aligned when reconnecting.

The color codes used on the motorcycle are indicated throughout this section and on the wiring diagram by the following abbreviations:

B = Blue	LG = Light Green
Bk = Black	O = Orange
Br = Brown	P = Pink
G = Green	R = Red
Gr = Grey	W = White
LB = Light Blue	Y = Yellow

In order to isolate an electrical failure, check the continuity of the electrical path through the part. A continuity check can usually be made without removing the part from the motorcycle -- by simply disconnecting the wires and connecting a continuity tester or volt-ohmmeter to the terminals or connections.

A continuity tester is useful when checking to find out whether or not there is an electrical connection between the two points. If the **quality** of the circuit is important, as when there is a specific coil resistance involved, or when checking for high resistance caused by corroded connections, an ohmmeter is needed. Many ohmmeters also have voltmeter circuits built into the same case.

Tools and Materials

DC Ammeter (0-5)
Continuity tester
Thermometer -30° to 120°C (-22° to 248°F)
Volt-ohmmeter
50mm Lock Wrench - HC 61076

© 1978 American Honda Motor Co., Inc.
Printed in U.S.A. 7 78

TROUBLESHOOTING

General Principle:

If a Light Does Not Come On When Its Switch Is Operated, One of the Following is True:

1. Bulb defective or burned out
2. Switch defective
3. Wiring to that component has open circuit
4. Fuse blown

No Lights Come On When Ignition Switch Is Turned ON:

1. Battery dead or disconnected
2. Ignition switch disconnected from harness
3. Ignition switch defective
4. Main fuse defective (30 amp)
5. Wiring defective, loose, or broken

All Lights Come On, but Dimly, When Ignition Switch Is Turned ON:

1. Battery low
2. Wiring or switch has excessive resistance

Headlight Beams Do Not Shift When HI-LO Switch Is Operated:

1. Beam filament burned out
2. Headlight switch defective
3. Starter button defective in free position

HEAD Indicator Does Not Light When Headlight Beam Is Burned Out:

1. HEAD indicator bulb burned out
2. Starter button defective in free position
3. Headlamp fuse blown
4. Reserve lighting system switching unit defective

© 1976 American Honda Motor Co., Inc.
Printed in U.S.A. 7 78

TAIL Indicator Does Not Light When Stop Switch Is Operated:

1. TAIL Indicator bulb burned out
2. Horn/stop/turn fuse burned out (15 amp)
3. Stop switch defective
4. Reserve lighting system switching unit defective

TAIL Indicator Does Not Light When Tail Light Is Burned Out:

1. Tail indicator bulb burned out
2. Tail/instrument lamp fuse burned out
3. Reserve lighting system switching unit defective

Stop Light Does Not Light When Tail Light Is Burned Out:

1. Bulb burned out
2. Tail/instrument lamp fuse burned out
3. Reserve lighting system switching unit defective
4. Reserve lighting system resistor has open circuit

Component Does Not Function:

1. Component defective
2. Switch defective
3. No power to switch or component
4. Wiring defective

Component Functions Intermittently:

1. Component defective
2. Wire loose

© 1976 American Honda Motor Co., Inc.
Printed in U.S.A. 7-78

SWITCHES

Oil Pressure Warning Switch

Check for continuity while applying pressure to switch.

Replace switch if necessary.

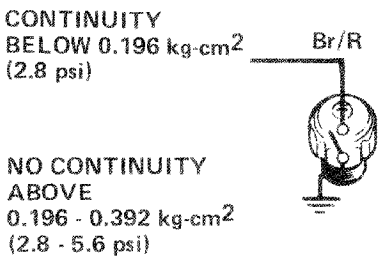

Brake Switches

Check rear brake stop switch for continuity with rear brake applied.

Check front brake stop switch for continuity with front brake applied.

Replace switches if necessary.

NOTE

Replacing the front brake stop switch will require bleeding the front brake system (refer to Section 14).

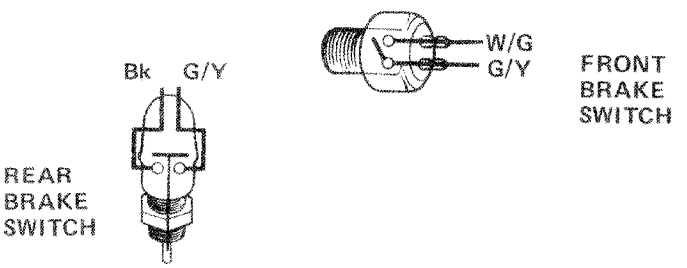

BRAKE APPLIED: CONTINUITY
BRAKE NOT APPLIED: NO CONTINUITY

Neutral Switch

Check switch for continuity between switch terminal (wire removed) and ground with transmission in neutral and with transmission in any gear.

NOTE

To replace the neutral switch, remove the R.H. exhaust pipe, oil screen cover, lower engine mounting bolt and neutral switch retainer bolt. Flex the frame as described on page 10-10 and remove the neutral switch.

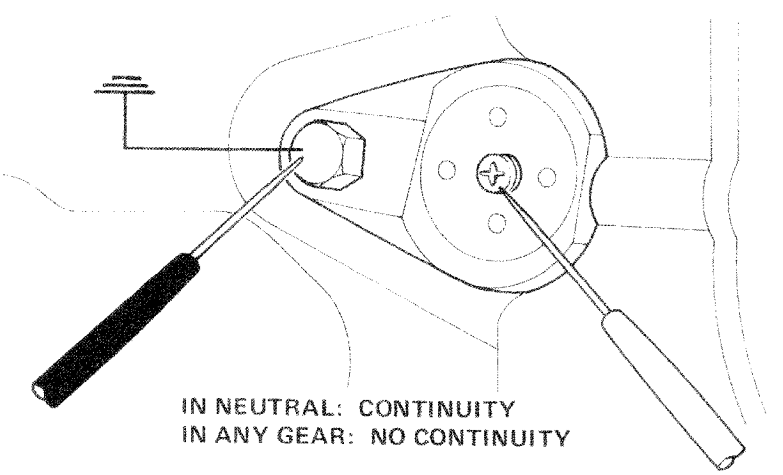

IN NEUTRAL: CONTINUITY
IN ANY GEAR: NO CONTINUITY

© 1978 American Honda Motor Co., Inc.
Printed in U.S.A. 7-78

Handlebar Switches

The handlebar cluster switches (lights, turn signals, horn, start, and stop) must be replaced as assemblies.

Continuity tests for the components of the handlebar cluster switches follow:

Continuity should exist between color coded wires indicated by interconnected circles on each chart.

Headlight HI-LO Switch

HI:	Br/W to B/W to B
MIDDLE (N):	Br/W to B/W to B to W
LO:	Br/W to B/W to W

LEFT 2	(Buzzer-Flasher) Gr to Br/G to O Br/W to LB/W
LEFT 1	(Flasher only) Gr to O Br/W to LB/W
OFF	Br/W to O/W to LB/W
RIGHT 1	(Flasher only) Gr to LB Br/W to O/W
RIGHT 2	(Buzzer-Flasher) Gr to Br/G to LB Br/W to O/W

Start button

Bk to Bk/R with button released
Bk to Y/R with button depressed

Engine stop switch

RUN: Bk/Br to Bk/W
OFF: No continuity

Horn button

LG to ground with button depressed
No continuity with button released

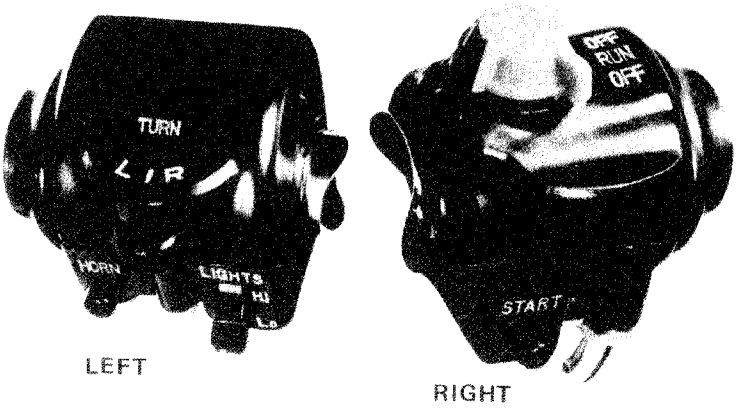

LEFT RIGHT

HEADLIGHT HI-LO

	TL	DM1	HB	LB
Hi	○—○—○			
(N)	○—○—○			○
Lo	○—○			○
code color	Br/W	B/W	B	W

TURN SIGNAL

	TR	B1	LT	RT		TL	PL	PR
L2	○—○—○					○—○—○		
L1	○—○					○—○—○		
N						○—○—○		
R1	○—○—○					○—○		
R2	○—○—○					○—○		
code color	Gr	Br/G	O	LB		Br/W	O/W	LB/W

START BUTTON

	ST1	ST2	HL
FREE	○—○		
START	○—○		
code color	Bk	Y/R	Bk/R

ENGINE STOP SWITCH

	KB	KW
OFF		
RUN	○—○	
OFF		
code color	Bk Br	Bk/W

	HO
HORN	○ ○ ⊏ ⏚
code color	LG

GL-1000 SHOP MANUAL
© 1978 American Honda Motor Co., Inc.
Printed in U.S.A. 7-78

LIGHTS, SWITCHES, AND INSTRUMENTS
SWITCHES

Ignition Switch

To remove the ignition switch, remove the instrument cluster, disconnect the plug, remove the mounting bolts, and the switch.

NOTE

Identify the wire colors at the connector. There are no colors on the switch.

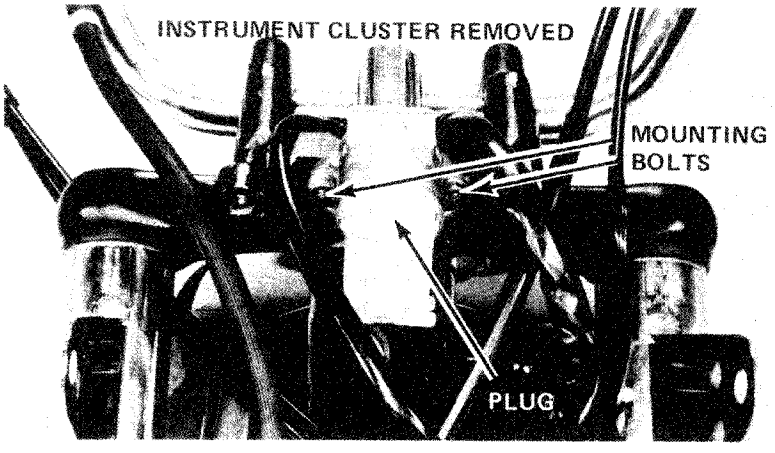

Check continuity of terminals on ignition switch in each switch position.

SWITCH POSITION

LOCK:	No continuity
OFF:	No continuity
ON:	R to Bk
	Br/W to Br/B
PARK:	R to Br/G

IGN SWITCH

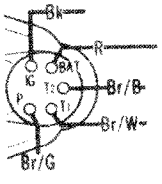

	BAT	IG	T_1	T_2	P
LOCK					
OFF					
ON	○—○		○—○		
PA	○				○
code color	R	Bk	Br/W	Br/B	Br/G

Clutch Switch

Check continuity of clutch lever (safety) switch with clutch released and applied.

Replace if necessary.

CLUTCH SWITCH

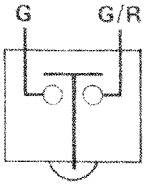

CLUTCH APPLIED: CONTINUITY
CLUTCH RELEASED: NO CONTINUITY

Removal

Unplug the wires. Remove the clutch lever and cable. Pry the switch out.

NOTE

The switch case has a small protrusion that must point toward the clutch cable when installed.

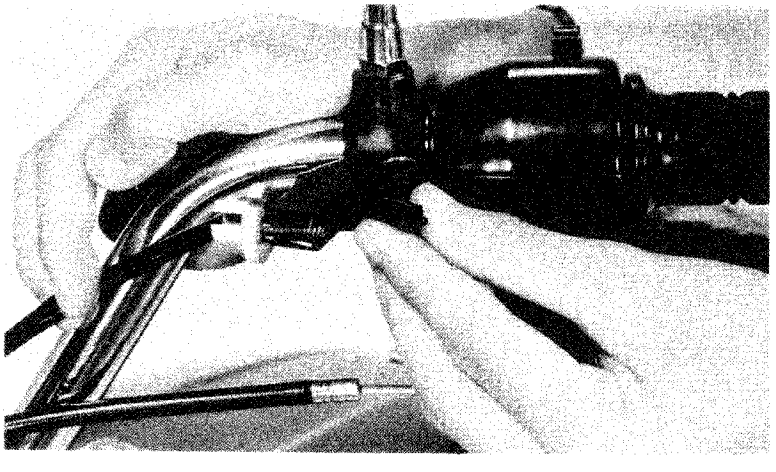

© 1976 American Honda Motor Co., Inc.
Printed in U.S.A. 7-78

Thermostatic Fan Switch

Inspect the switch for damage.

Suspend the switch in a pan of oil and check the temperatures at which the switch opens and closes.

Do not let the thermometer or switch touch the pan, or false readings will result.

WARNING

Wear gloves and eye protection.

NOTE

Oil must be used as the heated liquid to check operation above 100°C (212°F).

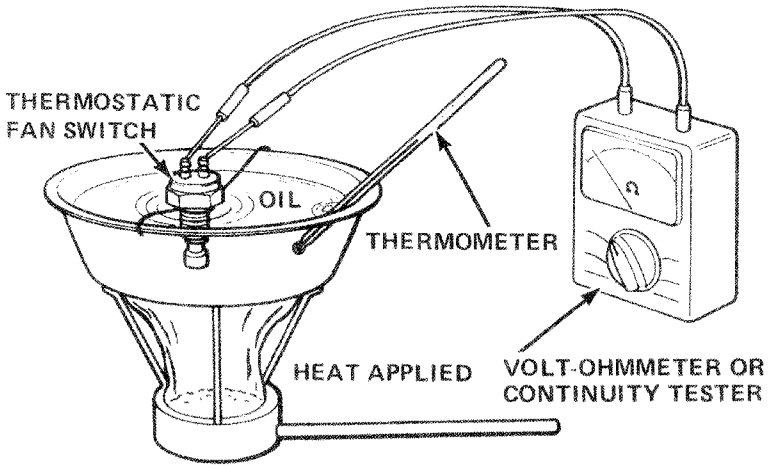

SWITCH OPEN (NO CONTINUITY) BELOW 93-97°C (199-207°F).
SWITCH CLOSED (CONTINUITY) 98-102°C (208-215°F).

DIODES

Identify the diode circuit by wire color code. All 4 diodes are identical in design and function.

Check diodes for continuity with a volt-ohmmeter or continuity tester.

Discard the old diode and install a new part if there is no continuity in the normal direction or if continuity exists in the reverse direction.

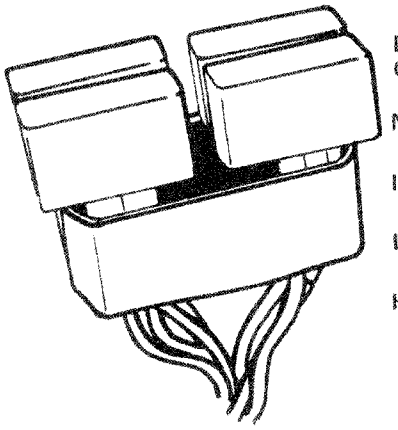

DIODE IDENTIFICATION
COLOR CODE

NEUTRAL LIGHT:
Light Green/Red - Green/Red

IGNITION BY-PASS:
Yellow/Red - Black/Brown

LOW BEAM RESERVE LIGHTING:
Pink - Green

HIGH BEAM RESERVE LIGHTING:
White - Green

© 1976 American Honda Motor Co., Inc.
Printed in U.S.A. 7-78

INSTRUMENTS

Auxiliary Voltage Regulator

The fuel and temperature gauge circuit includes an auxiliary voltage regulator that reduces voltage from 12v to 7v.

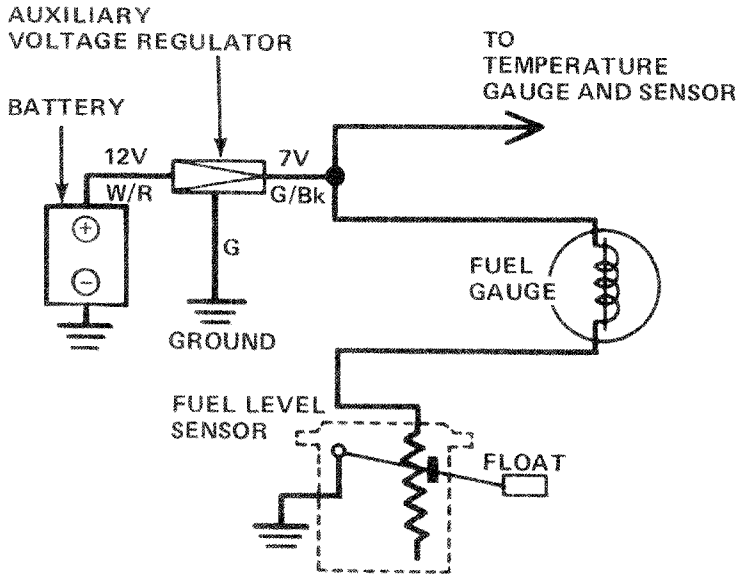

Remove the auxiliary voltage regulator from under the left side compartment and test it with a battery and a voltmeter as shown.

NOTE

Identify the wire colors at the connector. There are no colors on regulator.

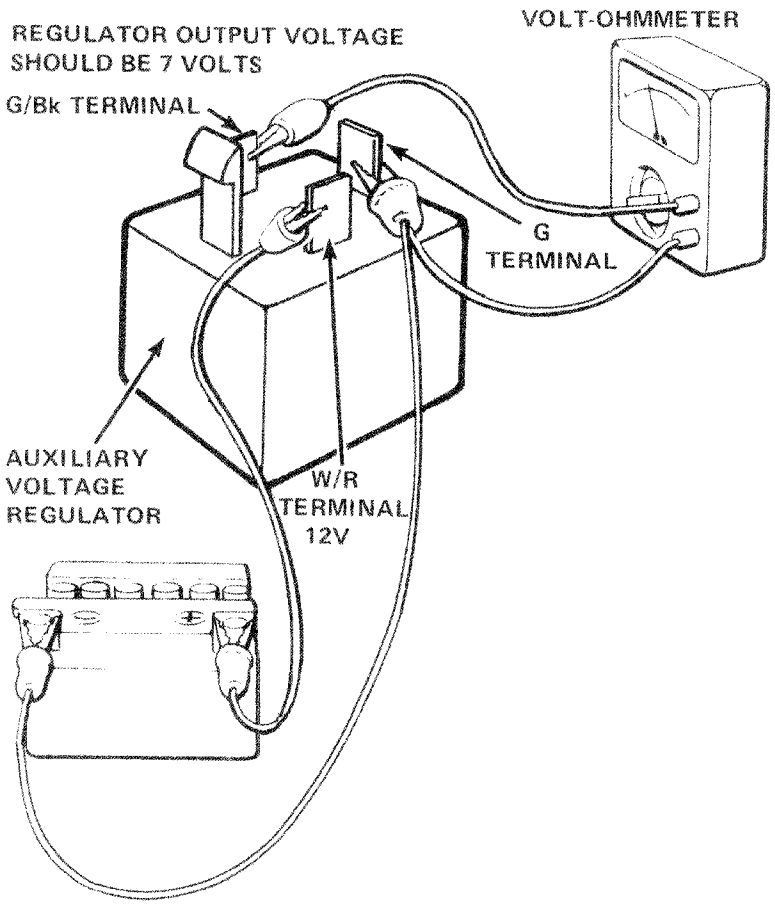

© 1978 American Honda Motor Co., Inc.
Printed in U.S.A. 7-78

Temperature Sensor Resistance Test

Inspect the sensor for damage.

Suspend the sensor in a pan of oil, and check the resistance through the sensor as the oil heats.

Do not let the sensor or thermometer touch the pan or false readings will result.

WARNING

Wear gloves and eye protection.

NOTE

Oil must be used as the heated liquid to check operation above 100°C (212°F)

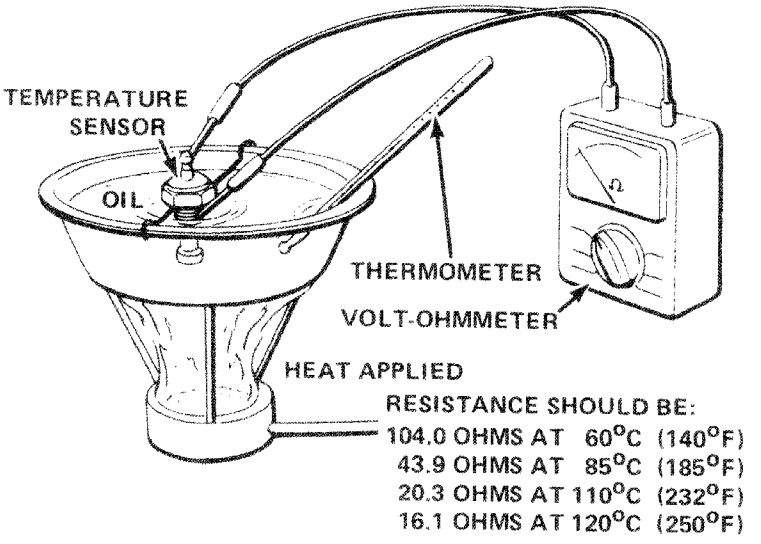

Temperature Gauge Function Test

Connect a tested sensor and auxiliary voltage regulator as shown to the gauge to be tested.

CAUTION

The temperature gauge operates on 7 volts. Do not apply 12 volts directly to gauge.

Suspend the sensor in a pan of oil as in the test above.

Do not let the sensor or thermometer touch the pan or false readings will result.

Compare the gauge readings to the thermometer readings as the oil heats.

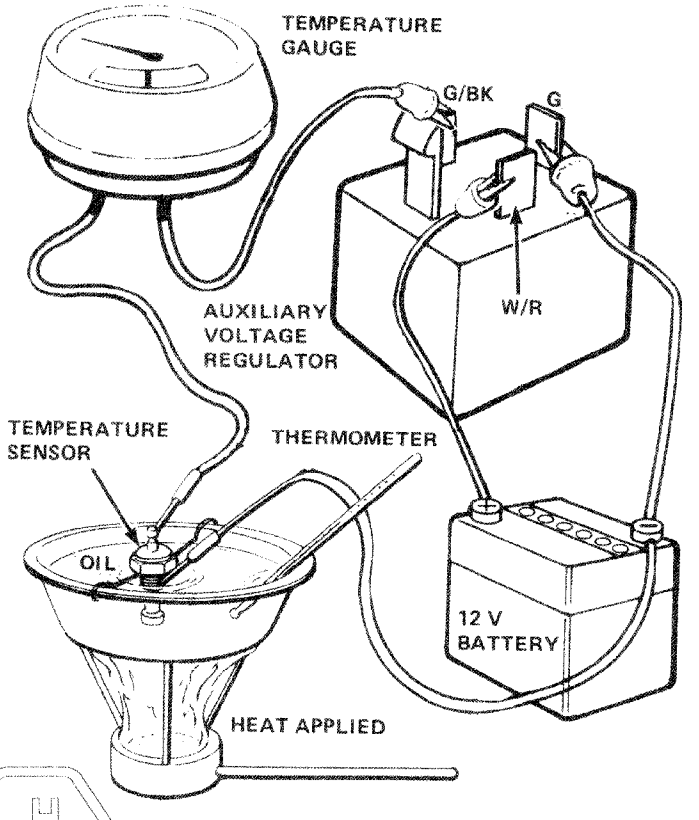

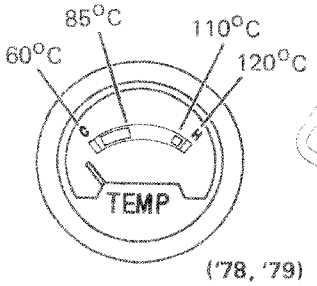

('78, '79)

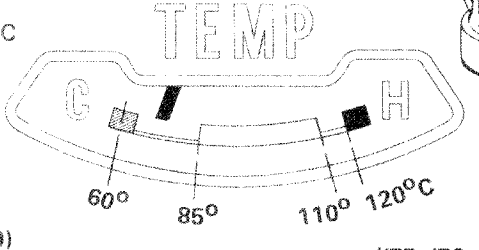

('75, '76, '77)

GL-1000 SHOP MANUAL
© 1978 American Honda Motor Co., Inc.
Printed in U.S.A. 7-78

Fuel Gauge and Sensor

Check the resistance of the fuel level sensor with a volt-ohmmeter.

NOTE

A special 50 mm wrench (HC 61076) is needed to remove the sensor from the tank.

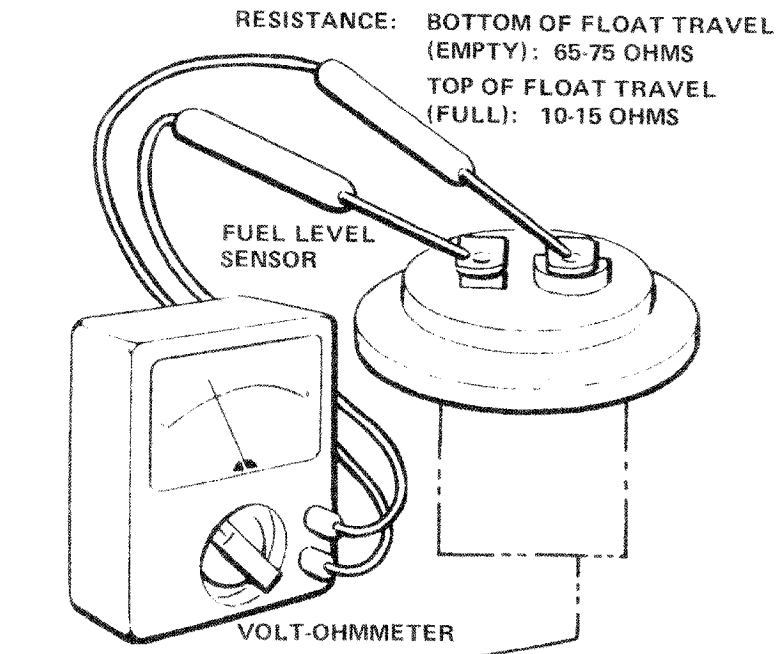

Fuel Gauge Function Test

Test the operation of the fuel gauge with a tested sensor and auxiliary voltage regulator as shown.

CAUTION

The fuel gauge operates on 7 volts. Do not apply 12 volts directly to the gauge.

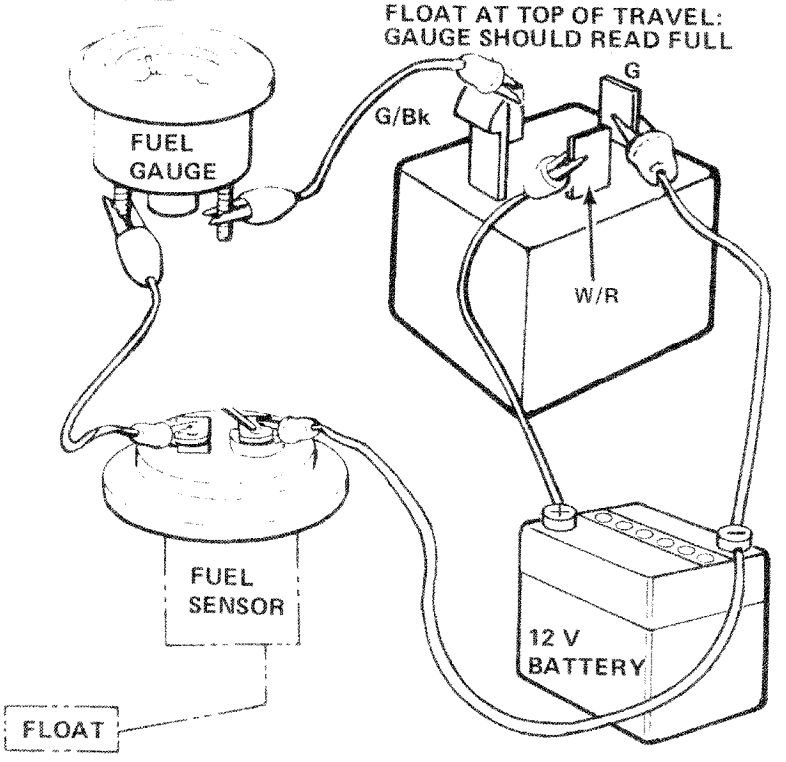

© 1978 American Honda Motor Co., Inc.
Printed in U.S.A. 7-78

VOLTMETER (1978 - 1979)

With the engine running above 2000 rpm, the voltmeter reading is normally within a range of 12-15 V.

A reading of 10-12 V. indicates that the battery is excessively discharged. The battery should be removed and charged.

A reading below 10 V. or above 15 V. indicates a malfunction in the electrical system. Determine and correct the cause of the malfunction.

The voltmeter can be checked by connecting it to a known voltage source and observing the gauge reading. When testing with a variable voltage source, start at 6 V. and raise the voltage to 16 V. The gauge should read accurately within a tolerance range of ± 0.6 V.

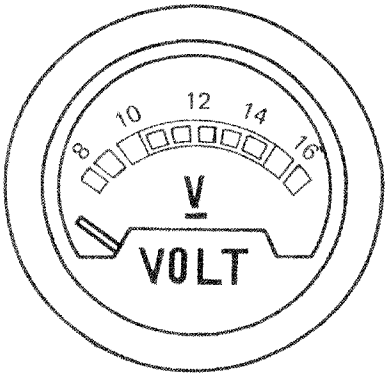

Voltmeter

© 1978 American Honda Motor Co., Inc.
Printed in U.S.A. 7-78

TEMP/FUEL/VOLT Meter Panel ('78, '79)

Disconnect the electrical connector at the junction box. Remove the four panel mounting bolts. Remove the panel assembly.

Remove the four screws from the meter mounting bracket to separate the meters and regulator from the panel. Remove retaining nuts and light bulbs. Remove meters.

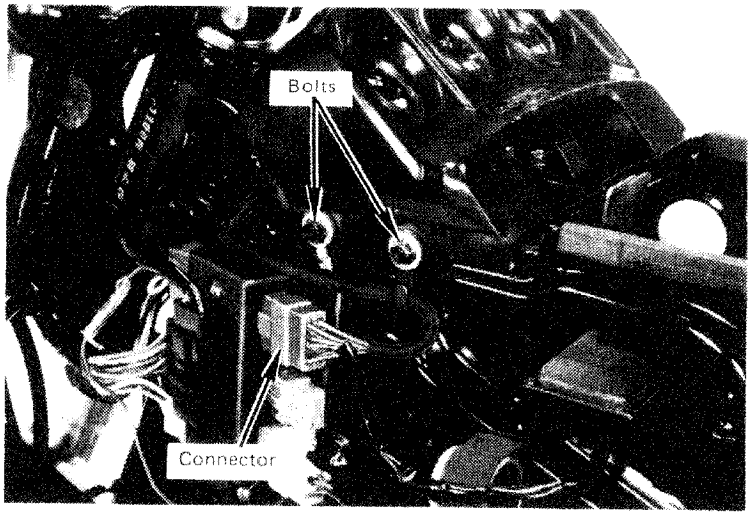

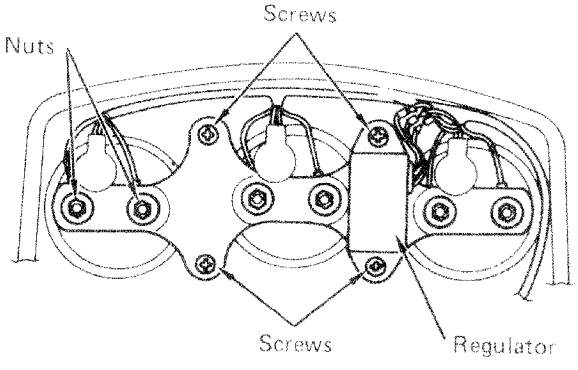

Accessory Terminal Box

Terminals are provided to power 12 V. D. C. accessories not exceeding 60 watts (5 amps). Higher current demands may blow the fuse or discharge the battery.

Connect accessory electrical leads securely. Utilize the retaining clips, located on the frame on either side of the terminal box, to route accessory leads away from hot engine parts and sharp edges.

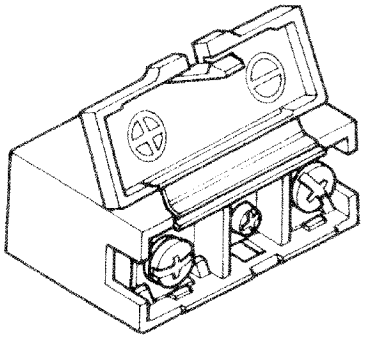

Accessory Terminal Box

© 1978 American Honda Motor Co., Inc.
Printed in U.S.A. 7-78

Instrument Panel Lights

Indicator bulbs can be removed after removing the indicator panel cover.

To remove the instrument light bulb, remove the cable and the meter set ring screws. Pull the meter out and pry out the rubber bulb sockets, and remove the bulbs.

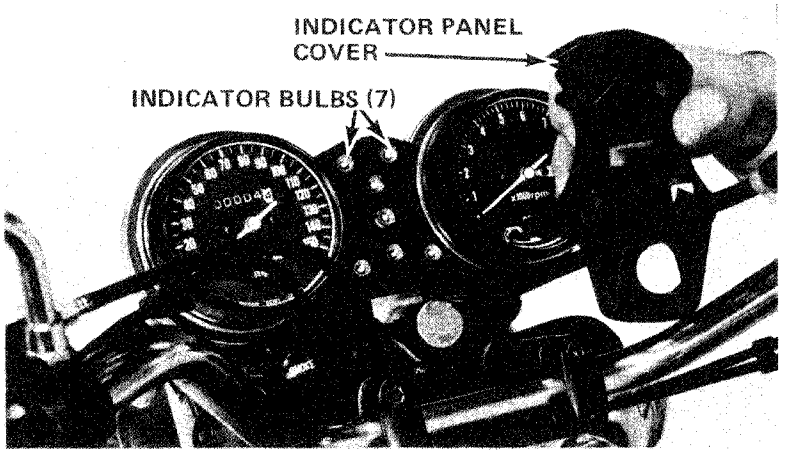

Turn Signals

Remove the lens to remove the bulb.

CAUTION

Do not overtighten the lens mounting screws.

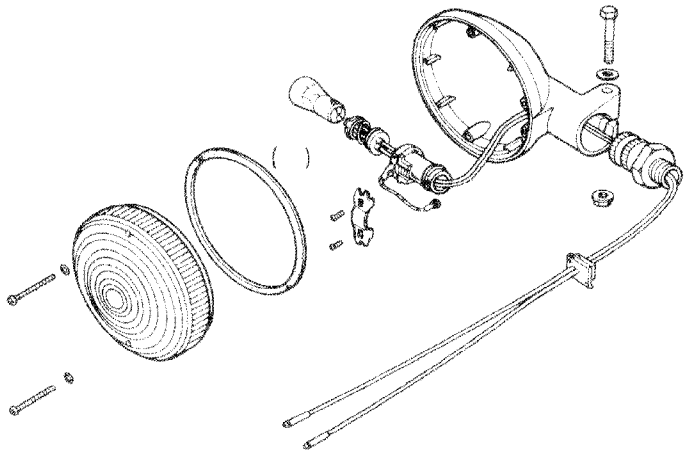

Turn Signal Flasher and Buzzer

Flasher should flash 60 to 120 times per minute when ambient temperature is 18.4 to 19.4°C (64-66°F).

If flasher does not work or flasher frequency is incorrect, check the components and connections shown in the circuit before replacing flasher.

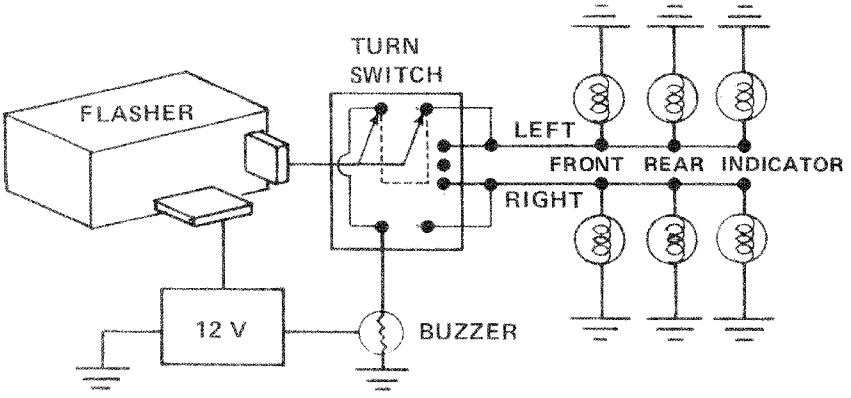

GL 1000 SHOP MANUAL
© 1976 American Honda Motor Co., Inc.
Printed in U.S.A. 7 78

LIGHTS, SWITCHES, AND INSTRUMENTS
HEADLIGHT AND TAIL LIGHT

Headlight Bulb Replacement

Remove the 3 Lamp mounting screws from the headlight case, pull the lamp assembly from the headlight case, and remove the socket from the bulb. Unfasten the bulb retaining clip, and remove the bulb. Reassemble in reverse order of disassembly.

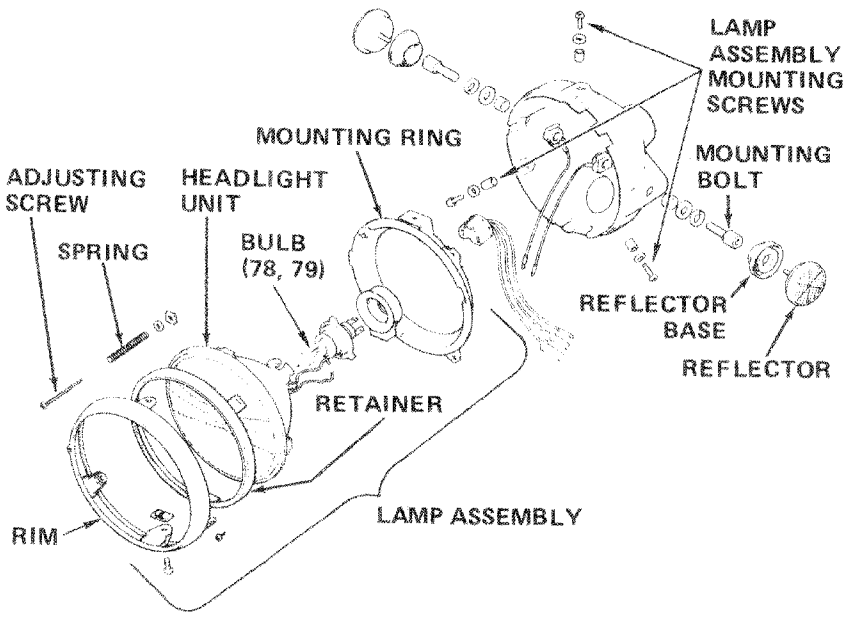

Headlight Aim

The headlight can be adjusted vertically and horizontally.
Adjust vertically by removing the side reflectors and reflector bases. Loosen the headlight mounting bolts and re-position the headlight. Tighten the mounting bolts and reinstall the re-flectors.
Adjust horizontally with the ad-justing screw.

NOTE
Adjust the headlight aim to conform with local laws and regulations.

WARNING

An improperly adjusted headlight may blind oncoming drivers, or it may fail to light the road for a safe distance.

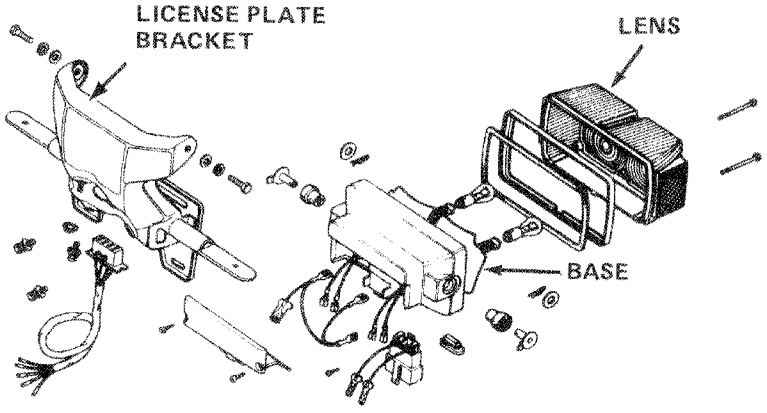

1979

Tail Light

To replace the bulb or any part of the tail light, remove the lens and then remove the part.

CAUTION

Do not overtighten the lens mounting screws.

Do not leave fingerprints on the headlight bulb.

© 1978 American Honda Motor Co., Inc.
Printed in U.S.A. 7-78

RESERVE LIGHTING SYSTEM

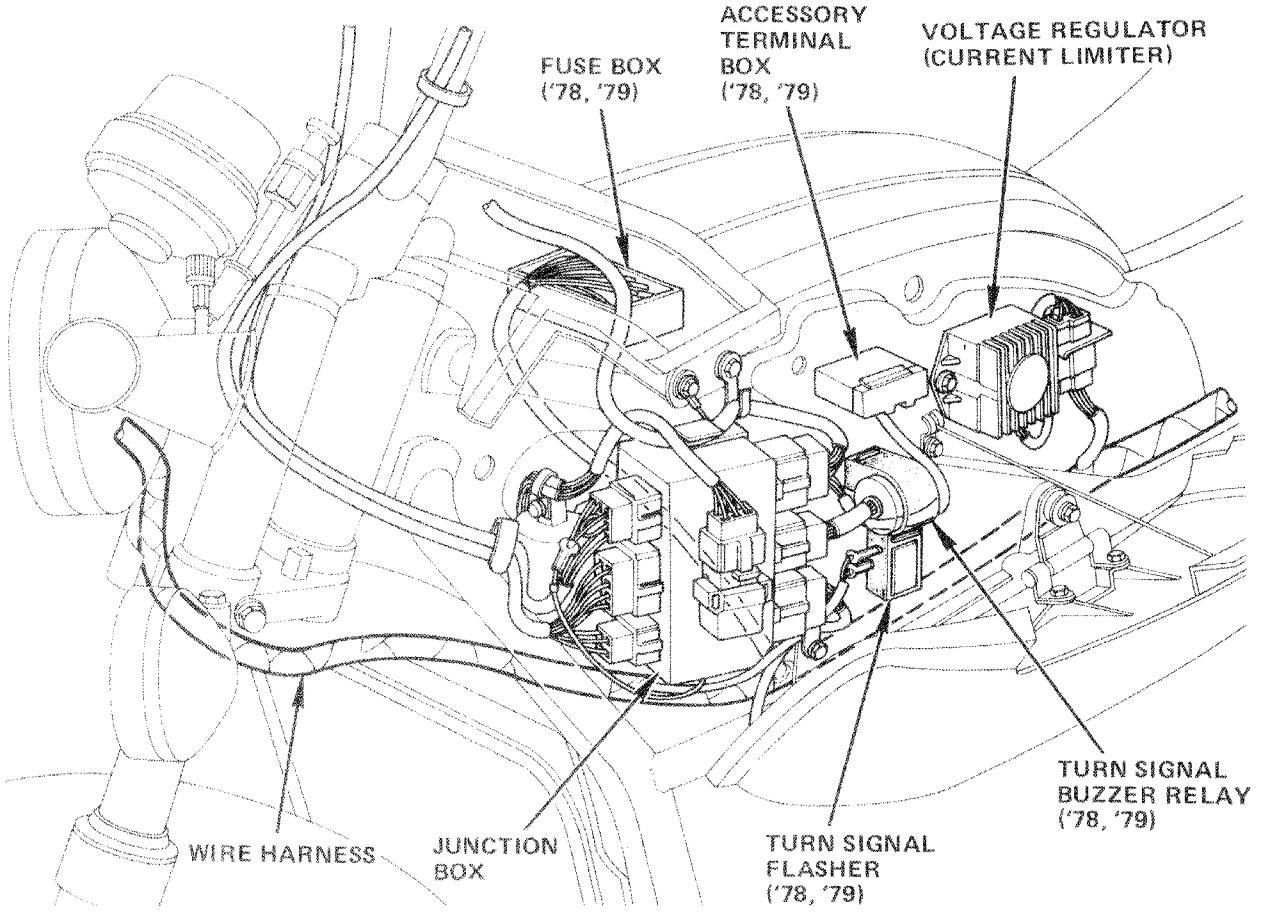

NOTE

1978 and 1979 GL-1000's are not equipped with the reserve lighting system described on pages 17-21 through 17-23.

© 1978 American Honda Motor Co., Inc.
Printed in U.S.A. 7-78

LIGHTS, SWITCHES, AND INSTRUMENTS
RESERVE LIGHTING SYSTEM

The reserve lighting system responds to a failure of a headlamp or tail lamp filament by activating the remaining filament at reduced power.

The major components of the reserve lighting system are the reserve lighting switching unit, the resistor assembly, and two diodes, all located under the service compartment left side cover as shown.

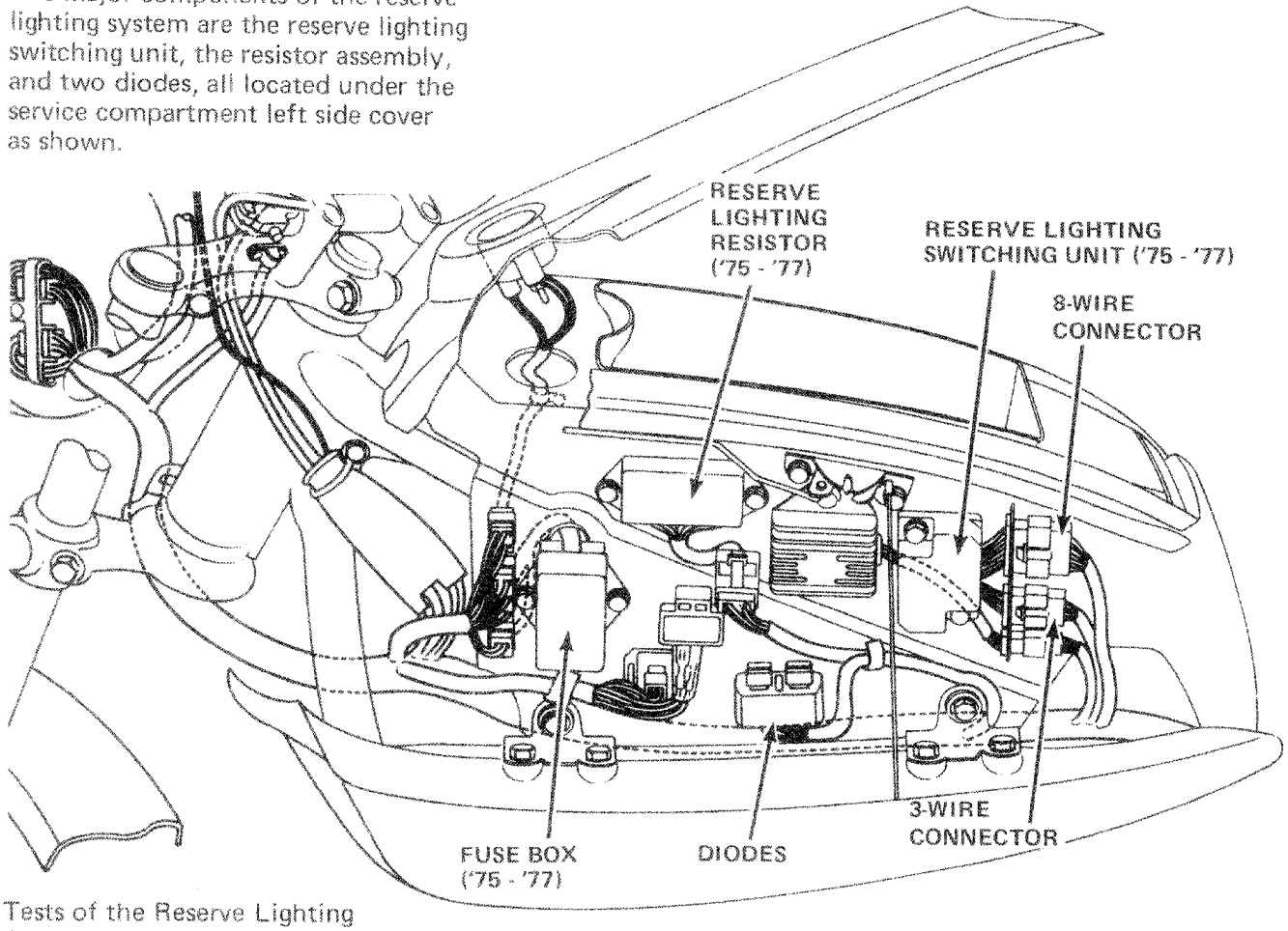

Tests of the Reserve Lighting System include input and output voltages and continuity tests of the resistor and two diodes.

NOTE

All voltage tests are made with the ignition switch ON and the engine stop switch OFF. Voltmeter leads should be proved to the open side of the 8-wire and 3-wire female plugs as required.

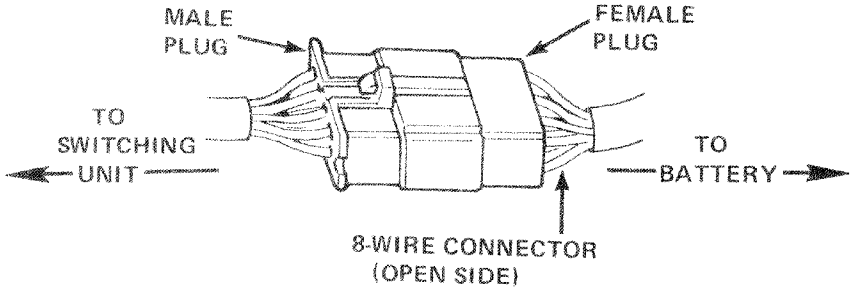

© 1978 American Honda Motor Co., Inc.
Printed in U.S.A. 7-78

Input Voltage to Switching Unit

If voltage across the Bk/Y and G leads is not 10 to 13 volts, either the starter button or the fuse for the headlamp is defective.

If voltage across the Br/B-tube and G leads is not 10 to 13 volts, either the starter button or the fuse for the tail indicator lamp is defective.

If the voltage across the G/Y and G leads is not 10 to 13 volts when the stop switch is operated, then either the stop switch or the fuse for the horn, stop light, and turn signal is defective.

Output Voltage at the Switching Unit

If the HEAD indicator light remains off with a headlight filament burned out, the voltage across the LG/W and G leads must be 10 to 13 volts or the switching unit is defective.

If one headlamp beam remains off, with the other beam burned out, the voltage across the LG/Bk and G leads must be 10 to 13 volts or the switching unit is defective.

If the TAIL indicator lamp remains off with the tail light burned out, the voltage across the LG/Y and G leads must be 6 to 8 volts or the switching unit is defective.

If the TAIL indicator lamp remains off when the stop switch is operated, the voltage across the LG/Y and G leads must be 10 to 13 volts (stop light switch ON) or the switching unit is defective.

If the stop light remains off with the tail light burned out, the voltage across the B/Bk and G leads must be 10 to 13 volts. If the voltage is incorrect, either the switching unit or the resistor is defective. Check the resistor.

Output Voltage at the Resistor

If the stop light remains off with the tail light burned out, and continuity exists across the resistor, measure the voltage across the Y and G pins. A reading of 4.9 to 6 volts is normal; no voltage indicates a problem in the switching unit.

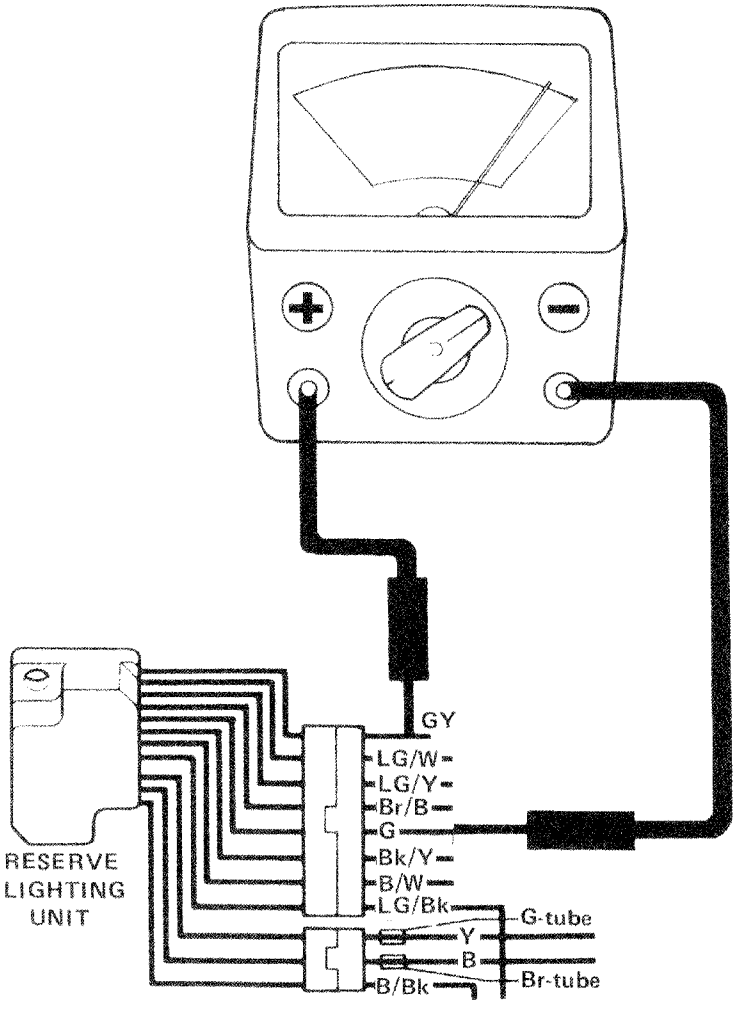

© 1976 American Honda Motor Co., Inc.
Printed in U.S.A. 7-78

LIGHTS, SWITCHES, AND INSTRUMENTS
RESERVE LIGHTING SYSTEM

Resistor Continuity Test

If the high beam remains off with the low beam burned out, continuity must exist across the P and B terminals of the resistor or the resistor is defective.

If the stop light remains off with the tail light burned out, continuity must exist across the B/Bk and G/Y terminals of the resistor, or the resistor is defective.

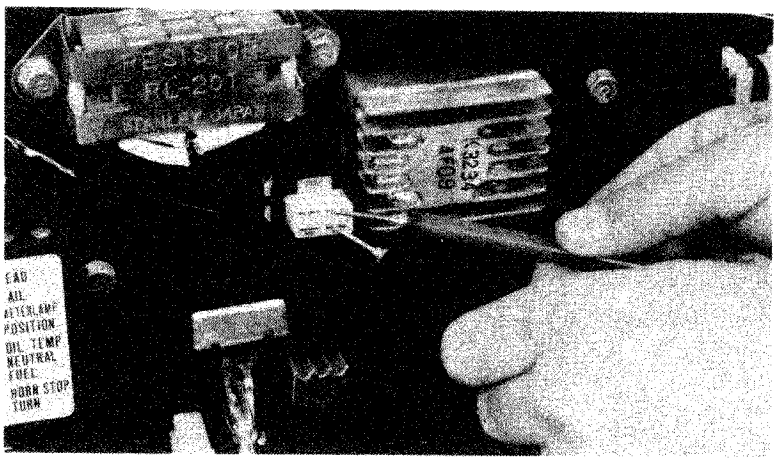

Reserve Lighting Diodes

Identify the high beam and low beam diodes as shown.

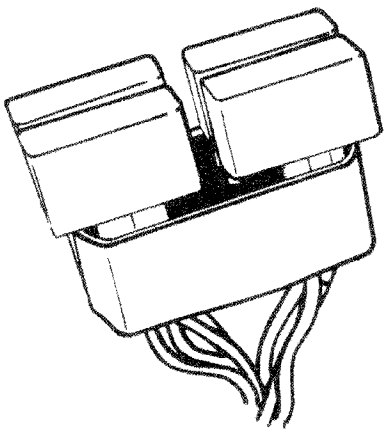

DIODE IDENTIFICATION
COLOR CODE

LOW BEAM RESERVE LIGHTING:
Pink - Green

HIGH BEAM RESERVE LIGHTING:
White - Green

Diode Continuity Test

When the high beam does not light, check continuity between the LG/Bk and P pins of the high beam diode.

When the low beam does not light, check for continuity between the LG/Bk and W pins of the low beam diode.

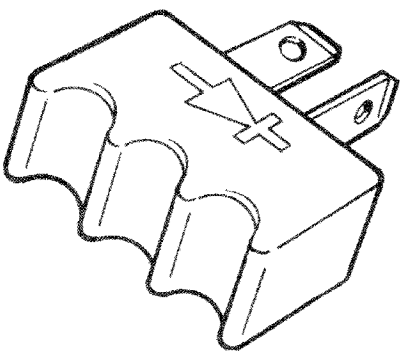

CONTINUITY IN ONE DIRECTION
NO CONTINUITY IN OTHER DIRECTION

© 1976 American Honda Motor Co., Inc.
Printed in U.S.A. 7 78

HORN, FUSES, AND WIRING

Horn

The horn can be tested by applying 12 volts directly to the black wire and grounding the green wire.

Check for continuity between horn wires (see page 17-10).

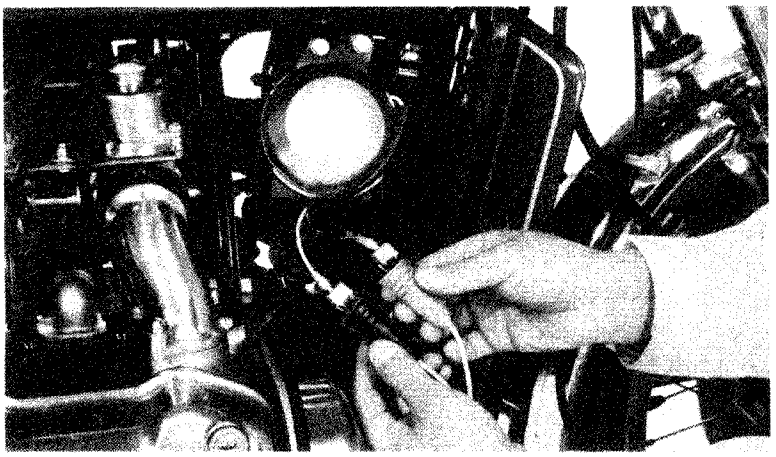

Fuses

The fuse box is located under the service compartment left side cover for 1975 to 1977 GL1000's and under the service compartment top cover for 1978 and 1979 models. Remove the fuse box cover for access to the fuses and replace burned out fuses as necessary. Spare fuses are located in the fuse box cover.

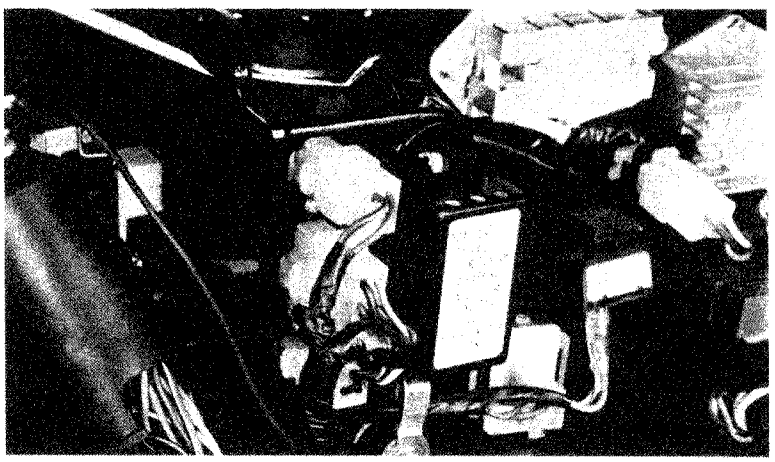

1975 - 1977

NOTE

Make sure the new fuse is the same as the old one. Always make sure the cause of a burned out fuse has been corrected before the fuse is replaced.

Wiring

If electrical problems persist after components or switches have been found good or have been replaced, test the wiring to the switch or component for continuity. Replace wire or connector as necessary.

If the ohmmeter indicates very high resistance through the connector, pull on the wire to see if the resistance will change. This indicates the connector is not making good contact and it must be cleaned, repaired, or replaced.

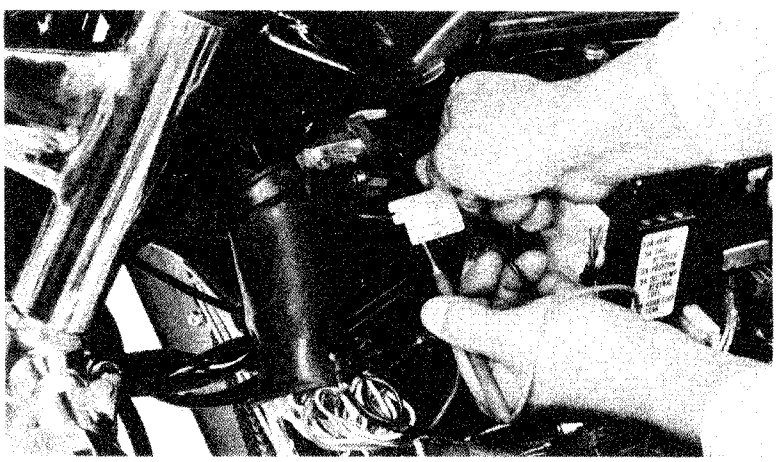

© 1978 American Honda Motor Co., Inc.
Printed in U.S.A. 7-78

LIGHTS, SWITCHES, AND INSTRUMENTS
HORN, FUSES, AND WIRING

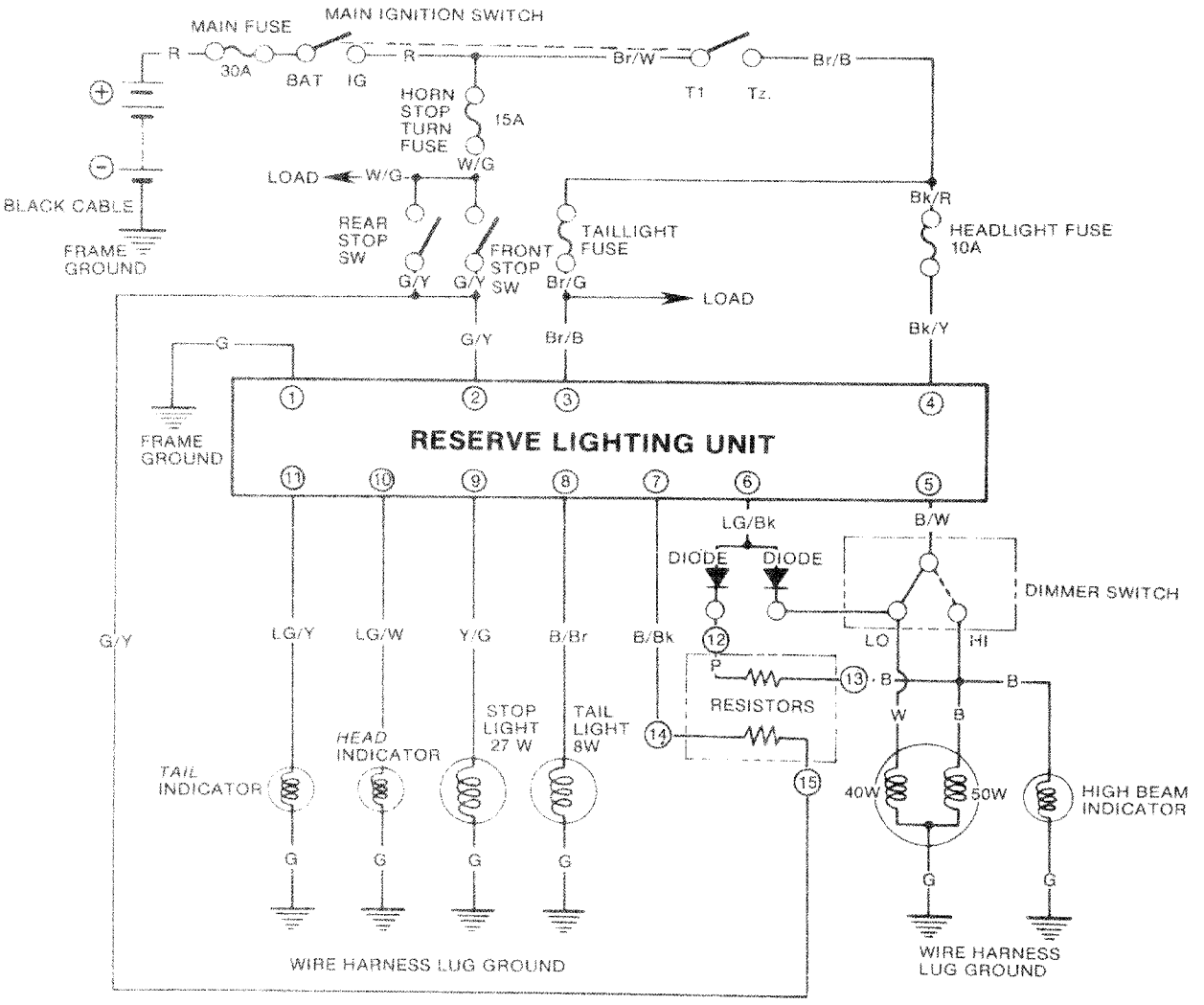

1975 - 1977

© 1978 American Honda Motor Co., Inc.
Printed in U.S.A. 7-78

JUNCTION BOX CONNECTORS

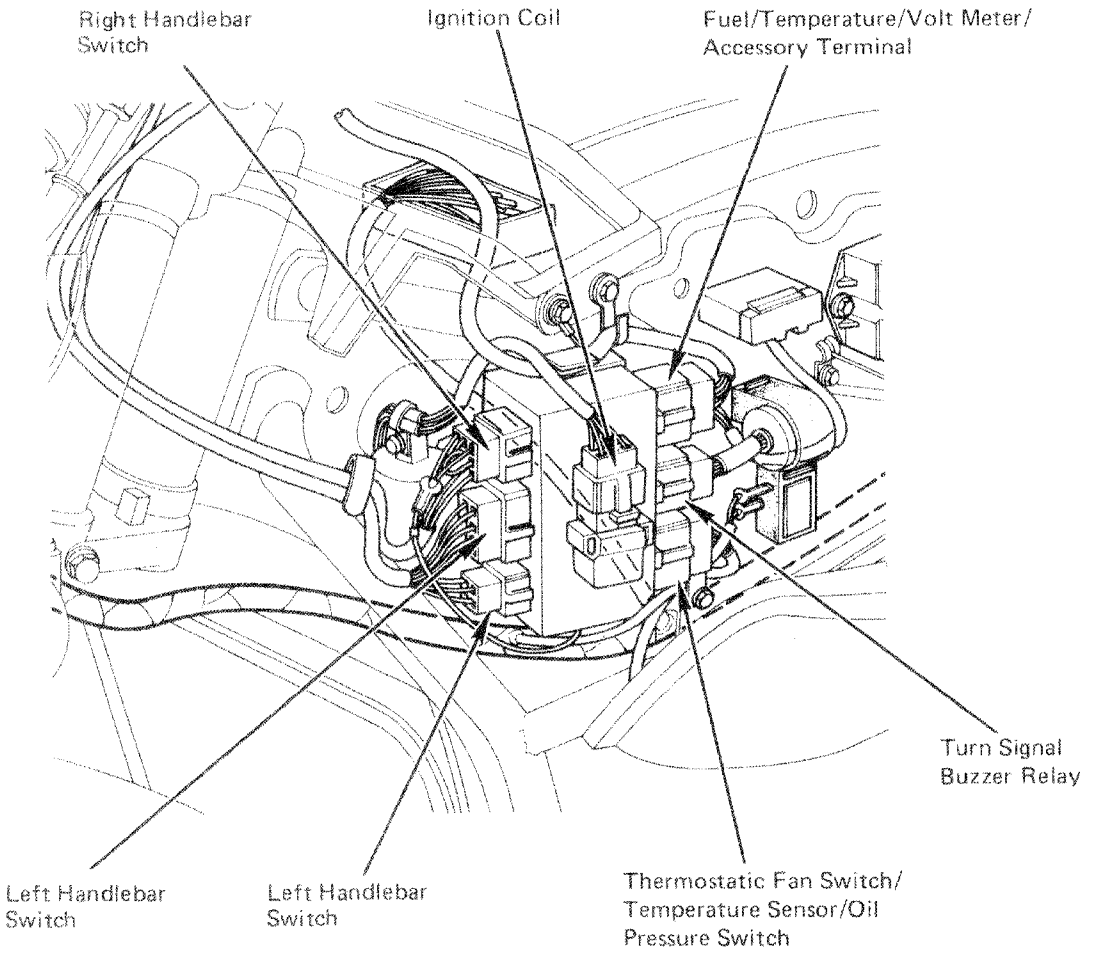

1978 - 1979

© 1978 American Honda Motor Co., Inc.
Printed in U.S.A. 7-78

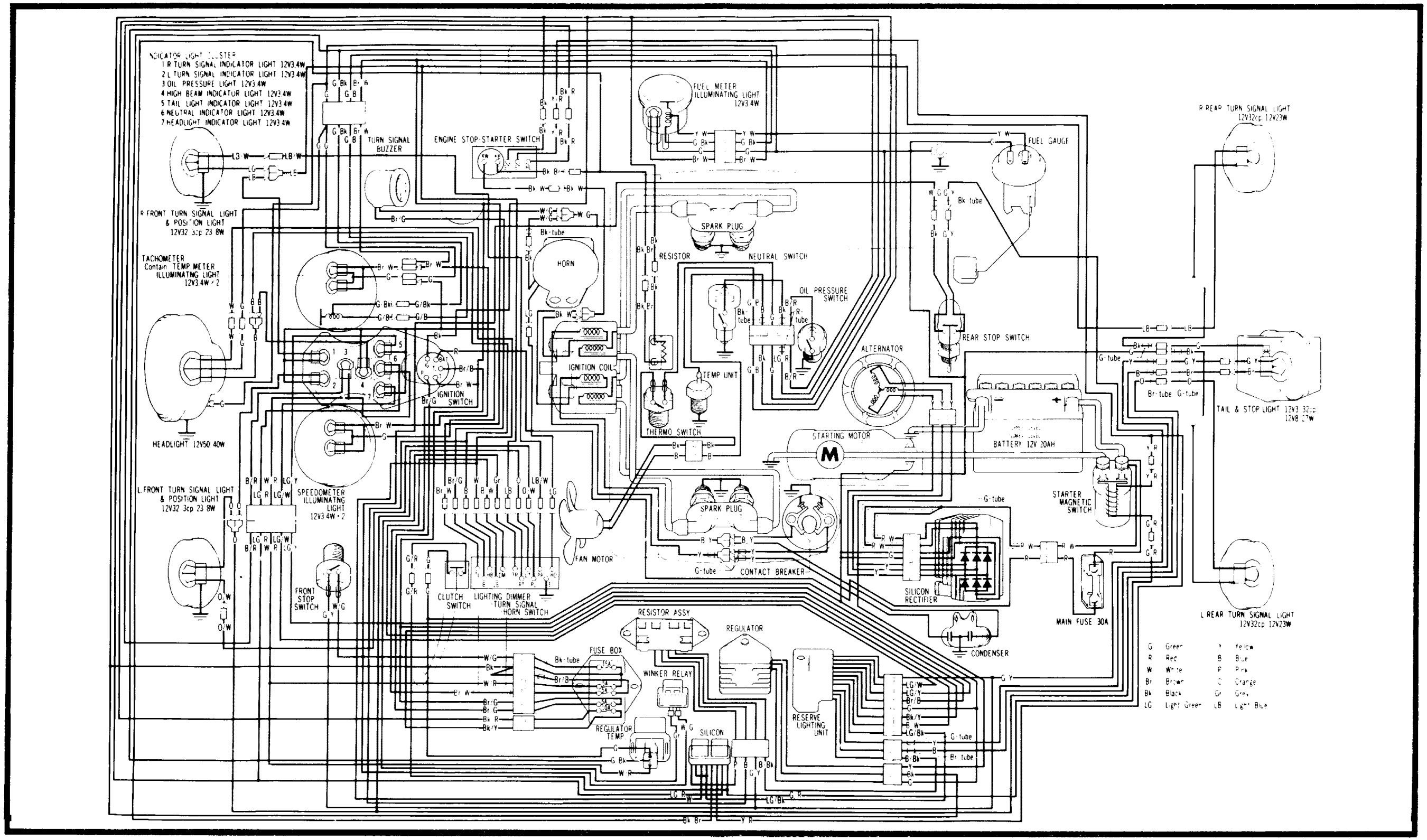

© 1978 American Honda Motor Co., Inc.
Printed in U.S.A. 7-78

WIRING DIAGRAM 1978, 1979

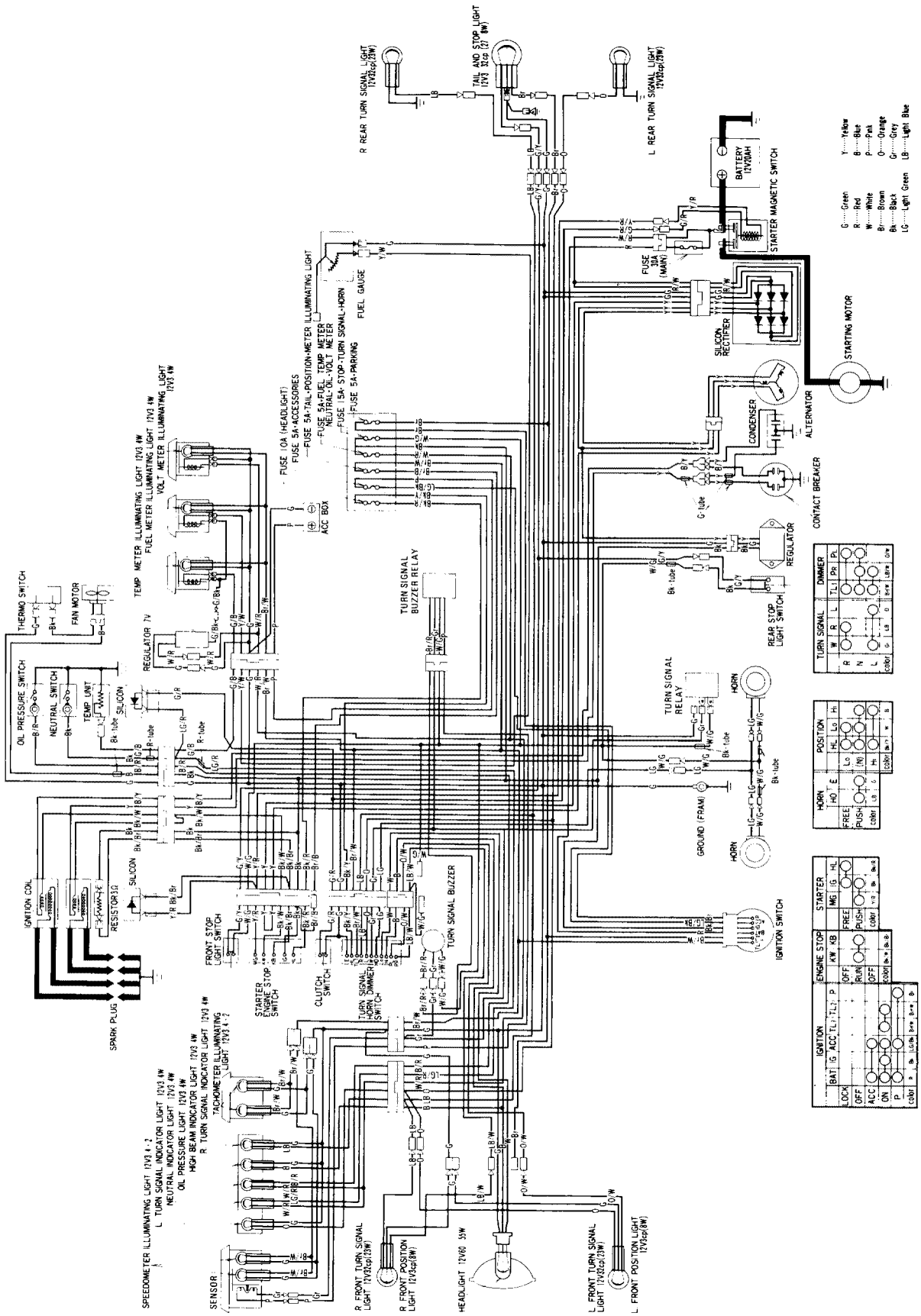

© 1978 American Honda Motor Co., Inc.
Printed in U.S.A. 7-78

18 BATTERY & CHARGING SYSTEM

SERVICE INFORMATION 18-2
TROUBLESHOOTING 18-4
BATTERY 18-5
CHARGING SYSTEM 18-6
AC GENERATOR REMOVAL 18-9
GENERATOR DRIVE INSPECTION 18-11

© 1976 American Honda Motor Co., Inc.
Printed in U.S.A. 7-78

SERVICE INFORMATION

Specifications

Battery type: Y50-N18L-A2
- Capacity: 12V, 20 ampere-hours
- Specific gravity (normal charge): 1.260 @ 20°C (68°F)
- Voltage under load (engine not running): 11.5V min.
- Charging rate (external source): 2 amperes maximum

AC generator: Three-phase, series-wound, with permanent magnet rotor

Voltage regulator: Transistorized non-adjustable regulator

Rectifier: Silicon diode

Generator Drive Damper Spring:
- Free Length: 26 mm (1.023 in)
- Force: 155 to 175 kg @ 20 mm (342-386 lb @ 0.787 in)

Torque Values

6mm Case bolts: 100 to 140 kg-cm (87 to 122 in-lb)
12mm Washer-head bolt for generator rotor: 8 to 9 kg-m (58 to 65 ft-lb)

Working Practice

Battery acid level should be checked regularly and filled with distilled water when necessary.

When charging the battery, quick-charging should only be done in an emergency; slow-charging is preferred.

Remove the battery from the motorcycle for charging whenever possible. If battery must be charged on the motorcycle, disconnect the battery cables.

Keep fire or sparks away from a charging battery because it produces hydrogen.

All charging system components can be tested on the motorcycle, but to service the AC generator, the engine must be removed from the frame.

© 1976 American Honda Motor Co., Inc.
Printed in U.S.A. 7-78

BATTERY & CHARGING SYSTEM SERVICE INFORMATION

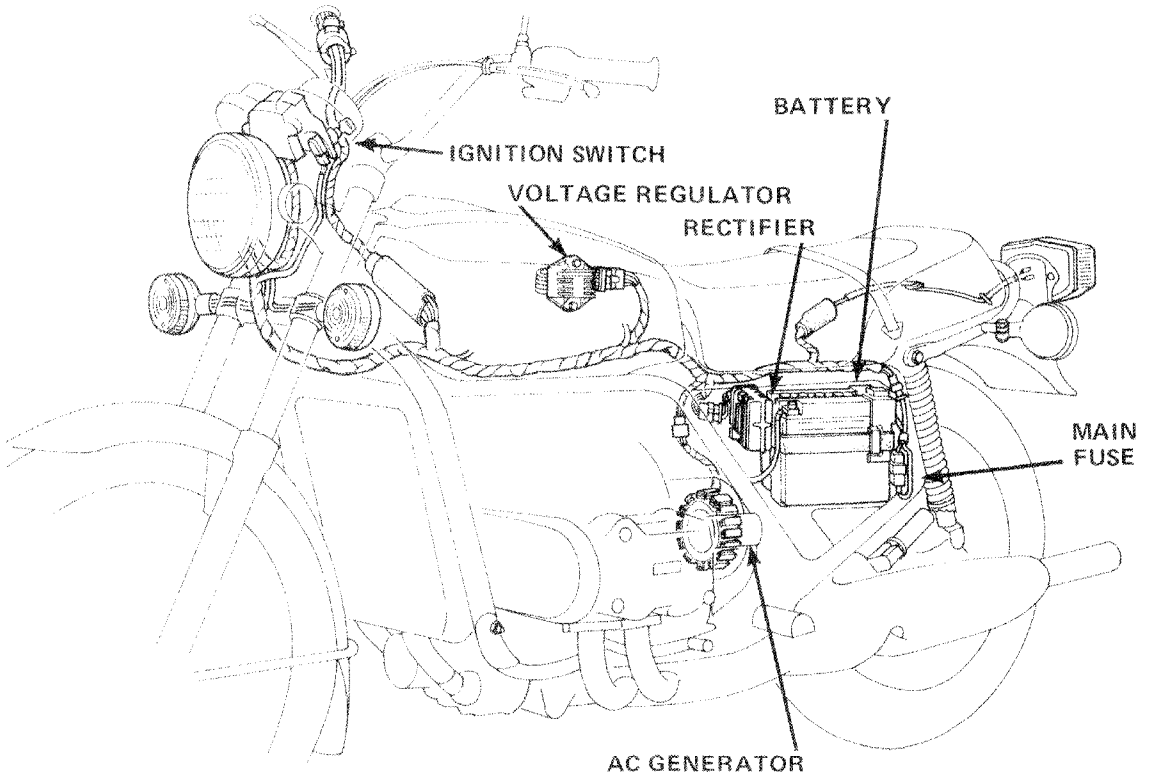

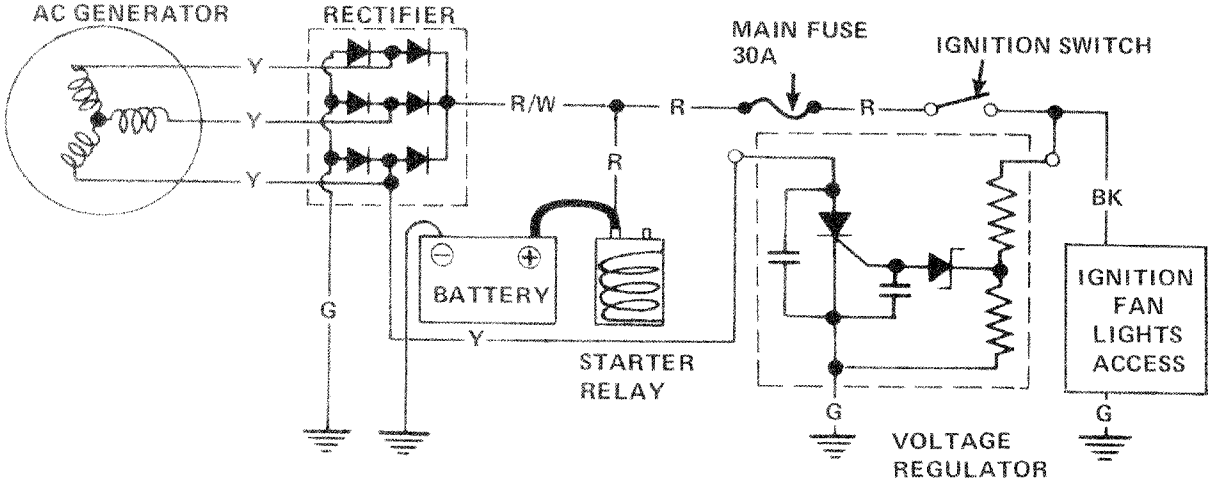

© 1976 American Honda Motor Co., Inc.
Printed in U.S.A. 7-78

Tools and Materials

Battery hydrometer
Volt-ohmmeter
Ammeter (0-5 AMP)
Continuity tester
HC 41306 AC generator rotor holder
HC 41309 AC generator rotor puller
Torque wrench 0-350 kg-cm (0-300 in-lb)
Torque wrench 0-25 kg-m (0-150 ft-lb)
Spring compressor HC 41331
Torx fastener bit or socket (T-40)

TROUBLESHOOTING

No Power - Key Turned On:

1. Dead battery
   a. Battery electrolyte evaporated
   b. Ignition switch left on
   c. Charging system failure
2. Disconnected battery cable
3. Main fuse burned out
4. Defective ignition switch

Low Power - Key Turned On:

1. Weak battery
   a. Low battery electrolyte level
   b. Ignition switch left on
   c. Charging system failure
2. Loose connection

Low Power - Engine Running:

1. Weak battery
   a. Low battery electrolyte level
   b. One or more dead cells
2. Charging system failure

Intermittent Power:

1. Loose battery connection
2. Loose charging system connection
3. Loose starting system connection
4. Loose connection or short circuit in ignition system
5. Loose connection or short circuit in lighting system

Charging System Failure:

1. Loose, broken, or shorted wire or connection
2. Defective voltage regulator
3. Defective silicon rectifier
4. Defective AC generator

© 1978 American Honda Motor Co., Inc.
Printed in U.S.A. 7-78

BATTERY

Testing Specific Gravity

NOTE
Do not test specific gravity immediately after adding distilled water to a cell.

The specific gravity of the battery must be checked with a hydrometer.

Test each cell by drawing electrolyte into the hydrometer.

Battery Removal

NOTE
Disconnect the negative cable first, then the positive cable. Reconnect the negative cable last.

Remove the battery from the motorcycle for charging whenever possible. If battery must be charged on the motorcycle, disconnect the battery cables.

WARNING

The battery contains sulfuric acid. Avoid contact with skin, eyes, or clothing. Antidote: EXTERNAL-Flush with water. INTERNAL-Drink large quantities of water or milk. Follow with milk of magnesia, beaten egg or vegetable oil. Call physician immediately. Eyes: Flush with water and get prompt medical attention. Batteries produce explosive gases. Keep sparks, flame, cigarettes away. Ventilate when charging or using in enclosed space. Always shield eyes when working near batteries.
KEEP OUT OF REACH OF CHILDREN.

CAUTION

Make sure the positive battery cable is not forced against any metal parts, otherwise a short may occur.

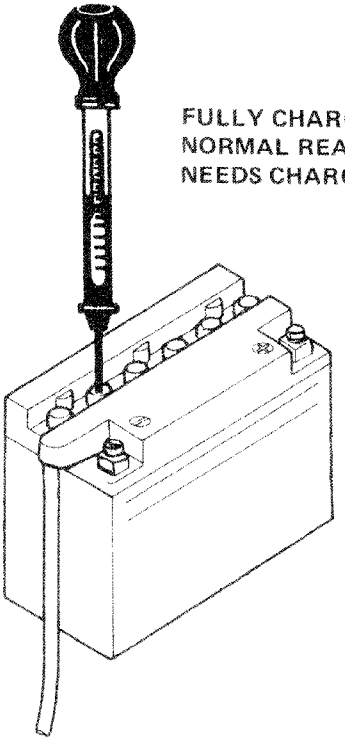

FULLY CHARGED: 1.280 @ 20°C (68°F)
NORMAL READING: 1.260 @ 20°C (68°F)
NEEDS CHARGING: below 1.200 @ 20°C (68°F)

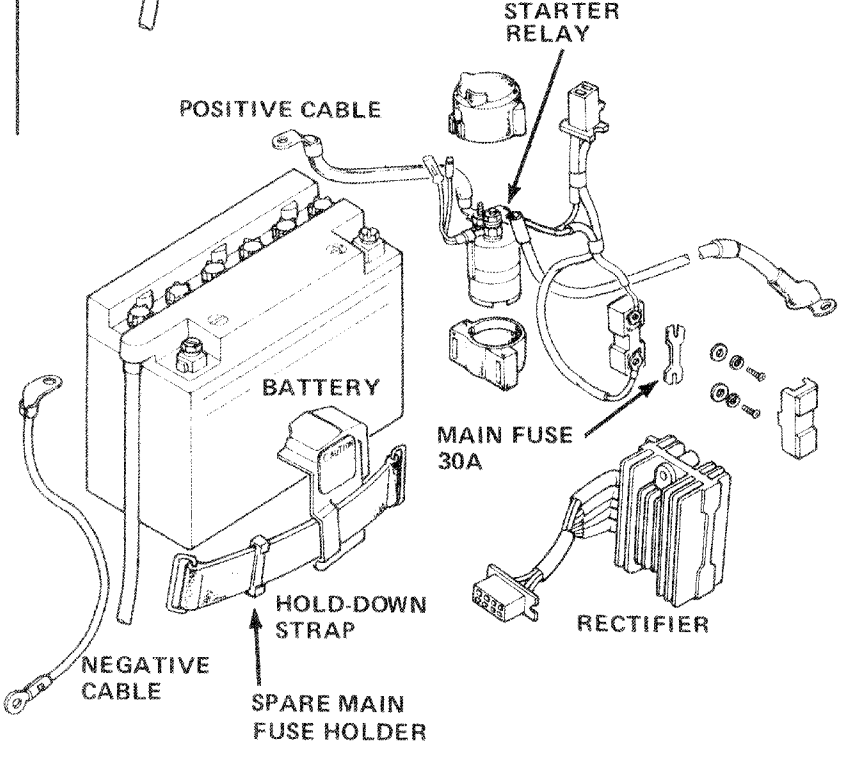

© 1976 American Honda Motor Co., Inc.
Printed in U.S.A. 7-78

Battery Charging

When the specific gravity reading is low, the battery must be recharged. Slow-charging is preferred whenever possible.

WARNING

Keep fire and sparks away from a charging battery. Discontinue charging if the electrolyte temperature exceeds 45°C. (113°F)

Check electrolyte level often.

After charging, wash the battery with water. After installation, coat the terminals with petroleum jelly.

CAUTION

Route breather tube as shown on battery caution label.

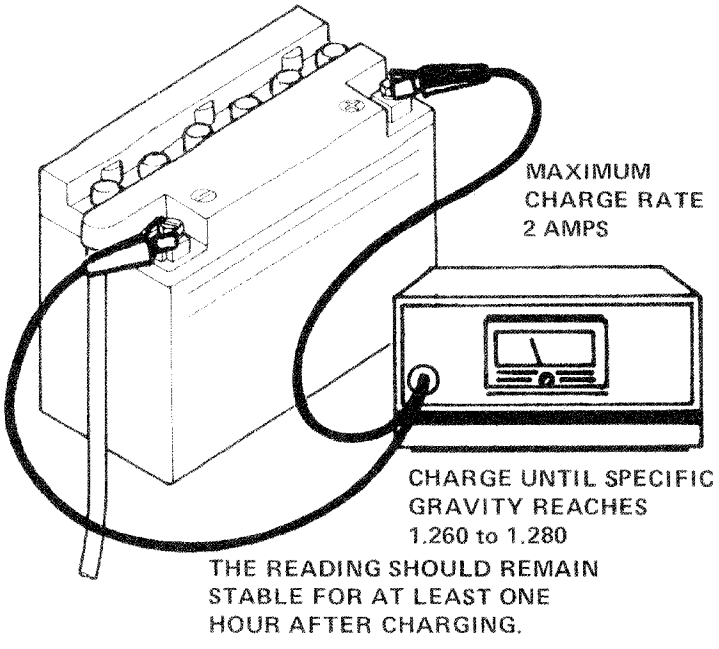

CHARGING SYSTEM

Charging Output Test

Connect a 0-20 V voltmeter and a 0-5 amp ammeter to check the output of the charging system with the engine running.

Run the engine for five minutes before taking readings.

Make this test with a fully charged battery, dimmer switch on HIGH, fan motor off, and engine speed at 5000 RPM.

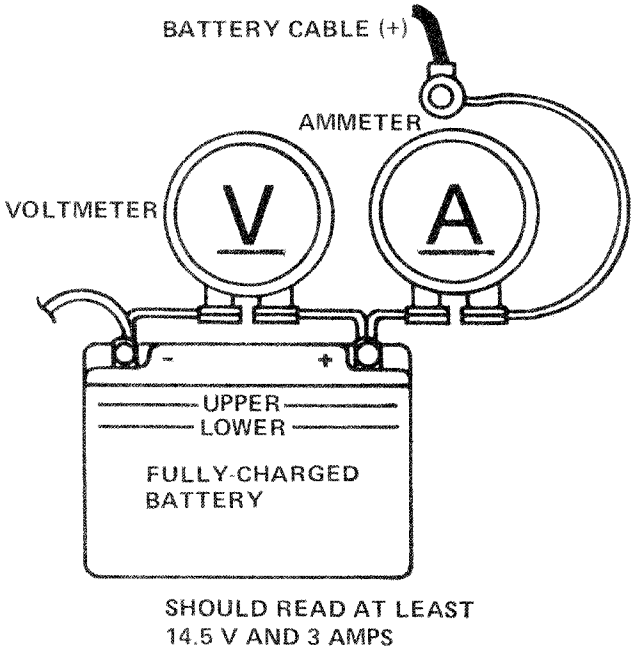

© 1978 American Honda Motor Co., Inc.
Printed in U.S.A. 7-78

AC Generator Continuity Test

NOTE
It is not necessary to remove the stator to make this test.

Check the yellow leads to the AC generator stator for continuity with each other.

Also check for shorts between any yellow lead and ground.

Replace the stator if any yellow lead is not continuous with the others, or if any lead has continuity to ground.

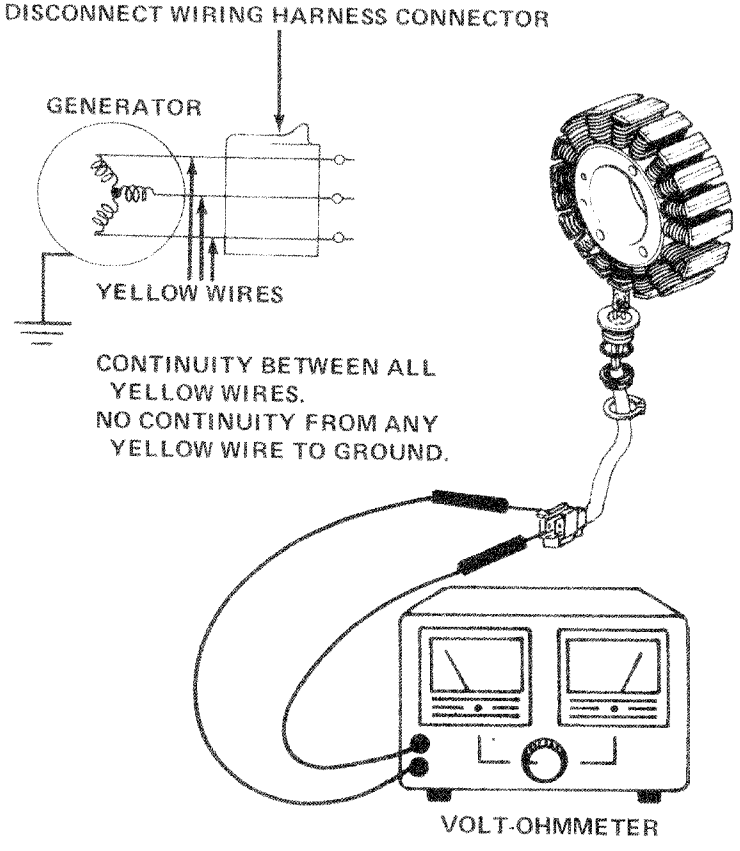

Silicon Rectifier Test

Check continuity through the rectifier with a volt-ohmmeter or continuity tester.

WARNING
Do not use a high voltage source such as an insulation resistance tester since it may damage the rectifier and give you a shock.

Continuity must exist between two green leads.

Continuity must exist between two red/white leads.

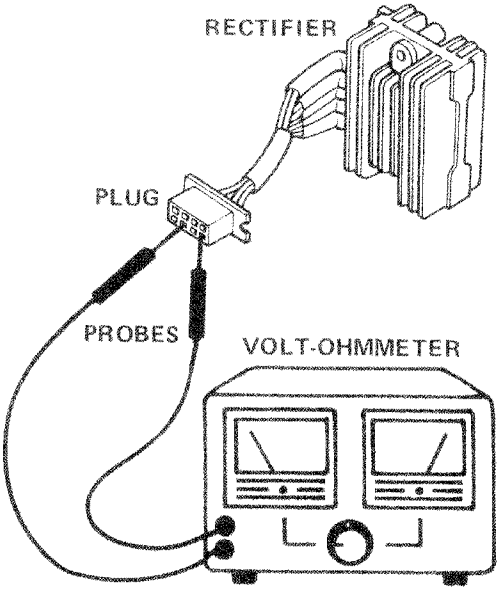

© 1976 American Honda Motor Co., Inc.
Printed in U.S.A. 7-78

Check the silicon rectifier resistances with an ohmmeter.

FORWARD BIAS

Green to Yellow 1 5-40 ohms
Green to Yellow 2 5-40 ohms
Green to Yellow 3 5-40 ohms
Yellow 1 to Red/White 5-40 ohms
Yellow 2 to Red/White 5-40 ohms
Yellow 3 to Red/White 5-40 ohms

REVERSE BIAS

Red/White to Yellow 1 2000 ohms (min)
Red/White to Yellow 2 2000 ohms (min)
Red/White to Yellow 3 2000 ohms (min)
Yellow 1 to Green 2000 ohms (min)
Yellow 2 to Green 2000 ohms (min)
Yellow 3 to Green 2000 ohms (min)

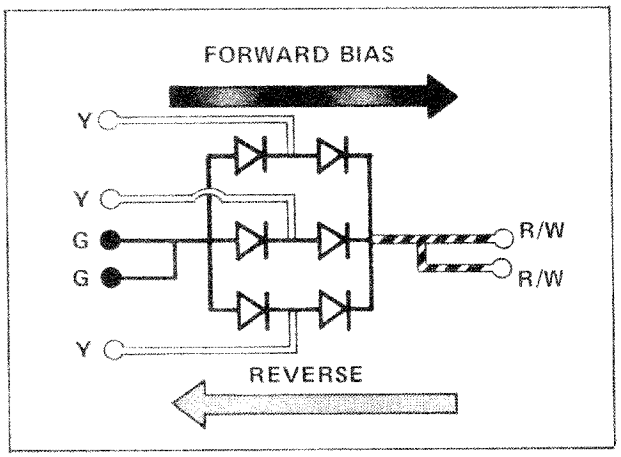

Regulator Performance Test

Connect a voltmeter across the battery. Connect an ammeter (0-5 amps) between the regulator and ground.

Check regulator performance with the engine running.

The regulator must divert current through the ammeter to ground when battery voltage reaches 14.0 to 15.0 V.

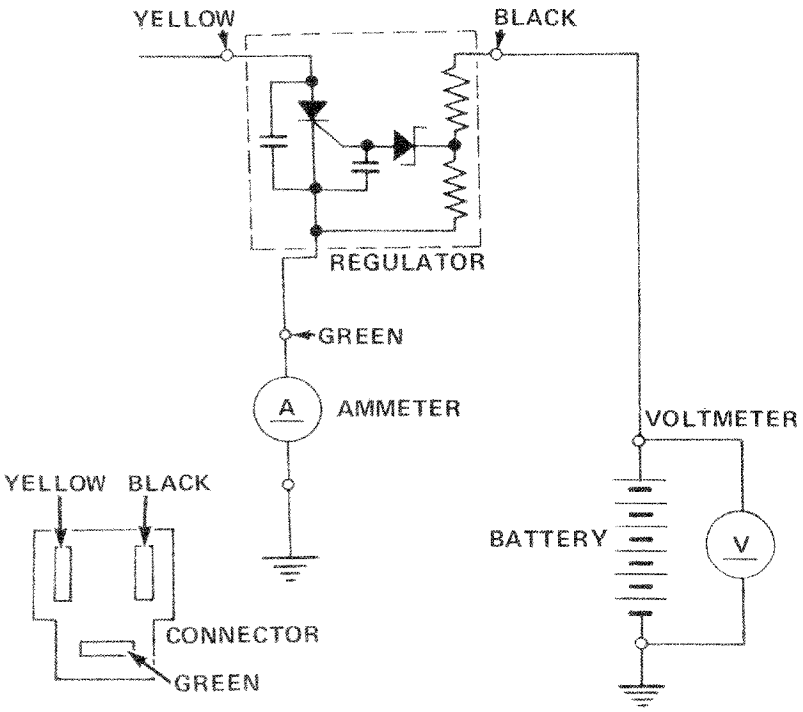

GL-1000 SHOP MANUAL
© 1976 American Honda Motor Co., Inc.
Printed in U.S.A. 7-78

BATTERY & CHARGING SYSTEM
AC GENERATOR REMOVAL

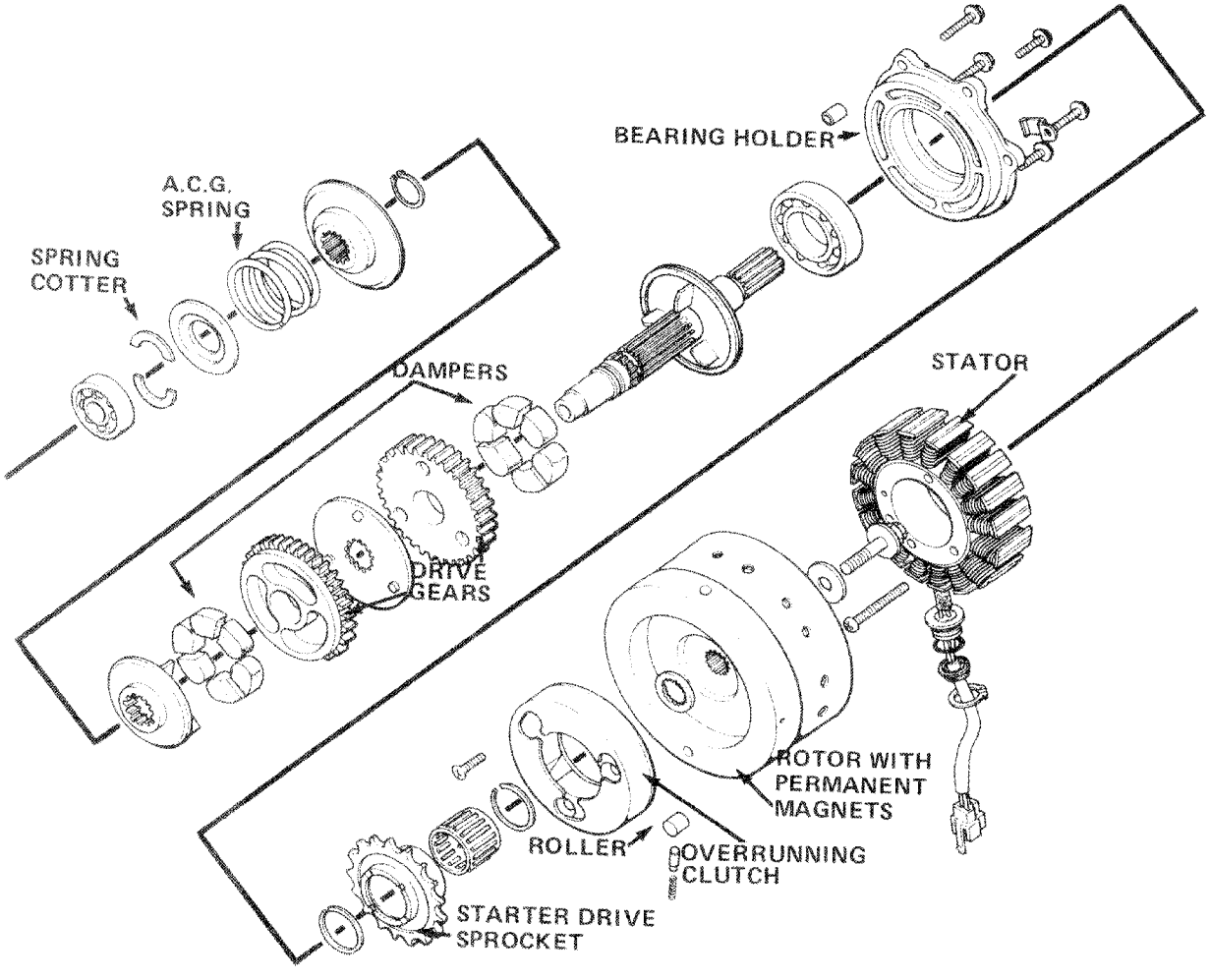

AC GENERATOR REMOVAL

NOTE
The engine must be removed from the frame before the AC generator can be removed. Remove the engine as described in Section 4.

Engine Cover Removal

Remove clutch cover and rear engine cover.

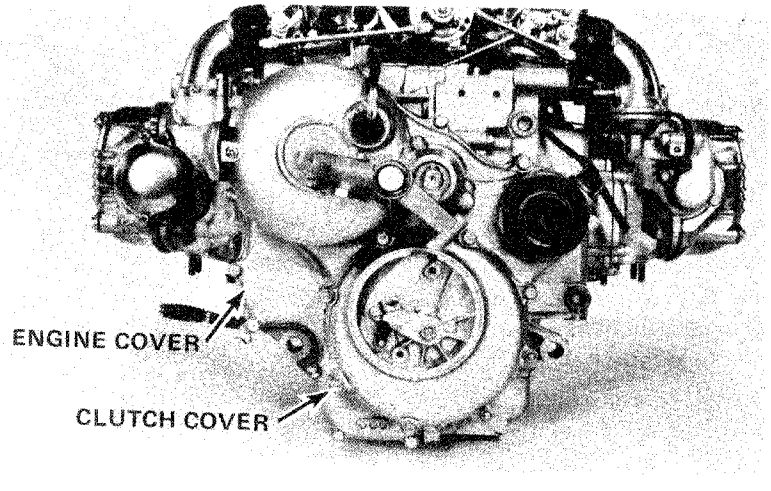

© 1976 American Honda Motor Co., Inc.
Printed in U.S.A. 7-78

The stator coils will remain attached inside the rear engine cover when it is removed from the engine. Remove the circlip and three screws to remove the stator coils.

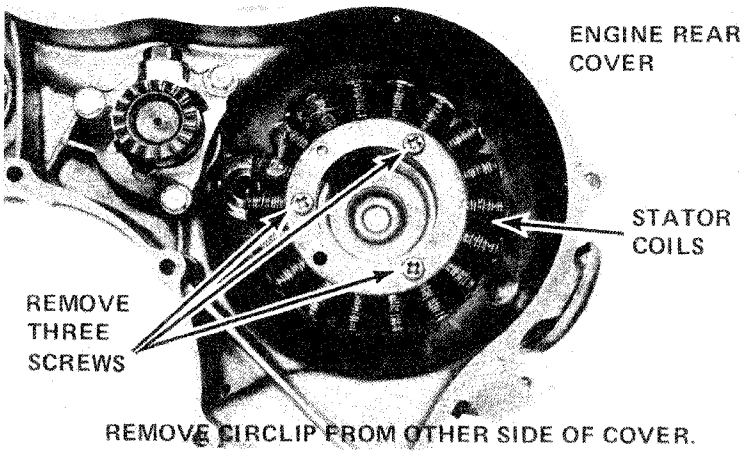

Remove the center bolt holding the AC generator rotor in place.

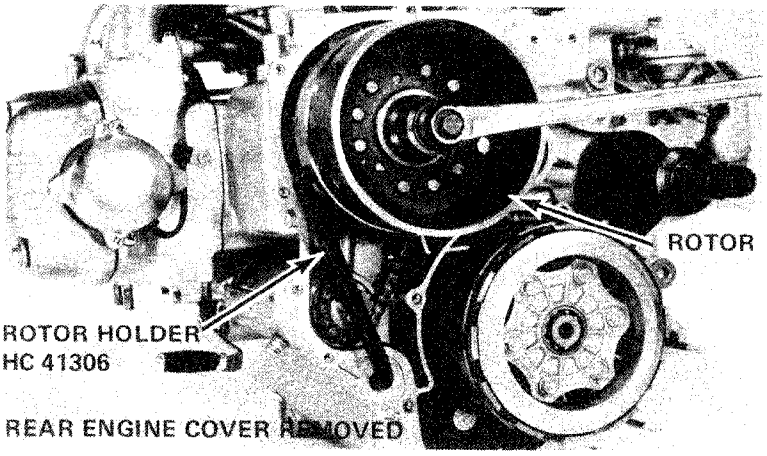

WARNING

The rotor weighs nine pounds. Be prepared to support it when it comes off the shaft.

Remove the rotor.

NOTE

The small rollers and springs that are part of the starter overrunning clutch assembly may fall out when the rotor is removed.

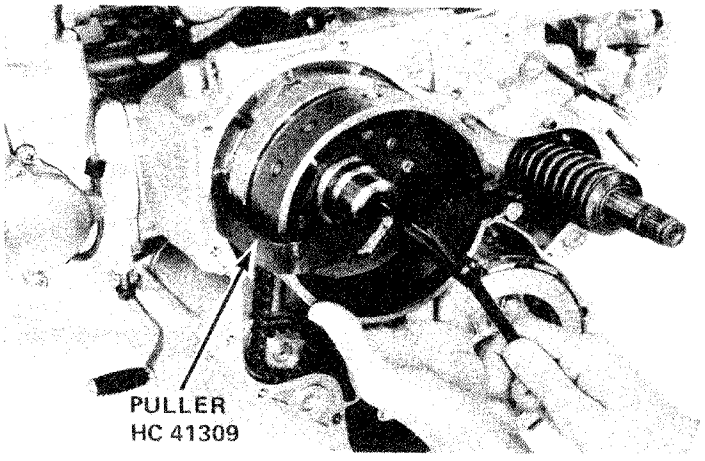

© 1976 American Honda Motor Co., Inc.
Printed in U.S.A. 7-78

BATTERY & CHARGING SYSTEM
GENERATOR DRIVE INSPECTION

Starter clutch inspection

Remove the three rollers from the assembly and inspect them for flat spots. See that they move freely up and down their ramps.

NOTE

Worn or corroded rollers will often cause the starter to spin without rotating the engine or, emit a loud screeching noise as the engine is being rotated.

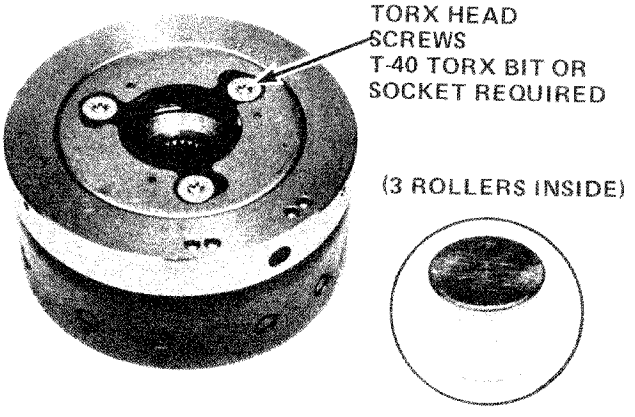

Remove the holding tab and slide the driven sprocket, chain and starter sprocket from shaft.

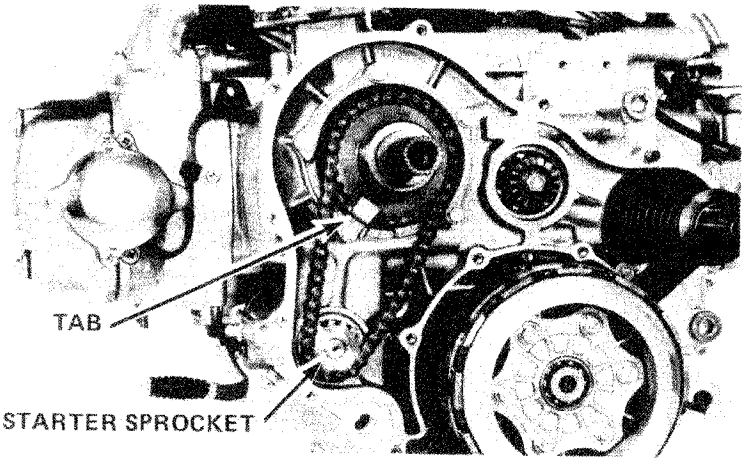

Remove the bearing holder bolts and slide the generator drive assembly free of the case.

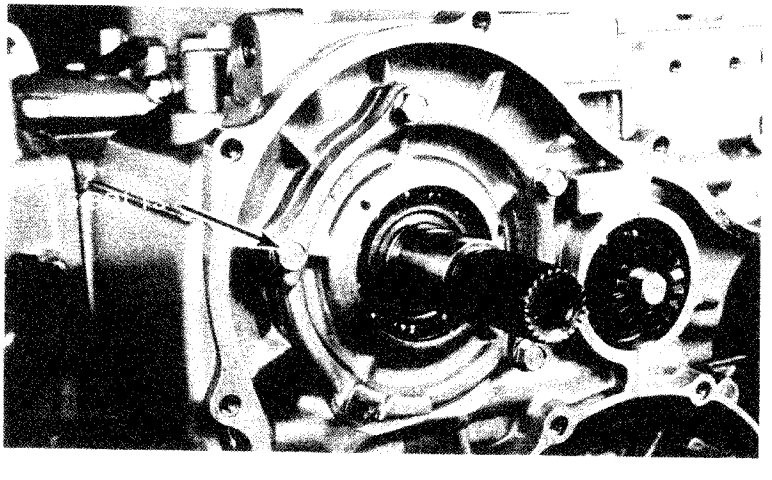

© 1976 American Honda Motor Co., Inc.
Printed in U.S.A. 7-78

Set the assembly into a press. Compress the spring and remove the cotters.

NOTE
Do not compress the spring more than necessary to remove the cotters.

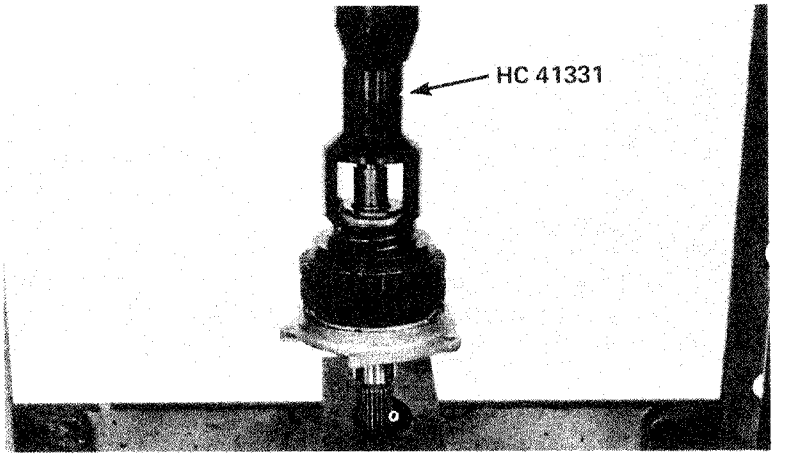

Remove the circlip, gears and damper.

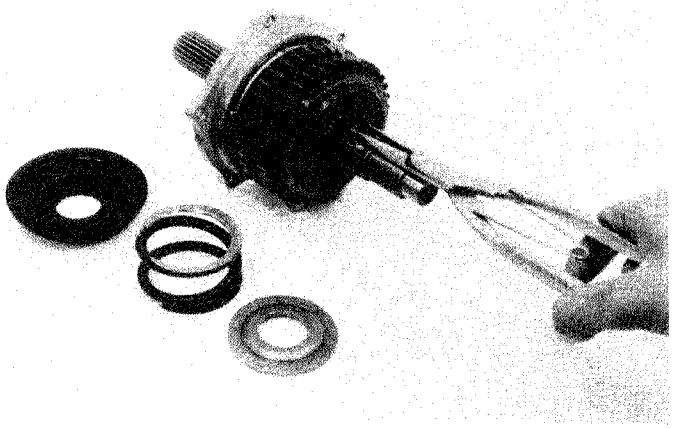

Inspect the damper rubbers, damper plates, and stopper plate for wear. Replace if necessary.

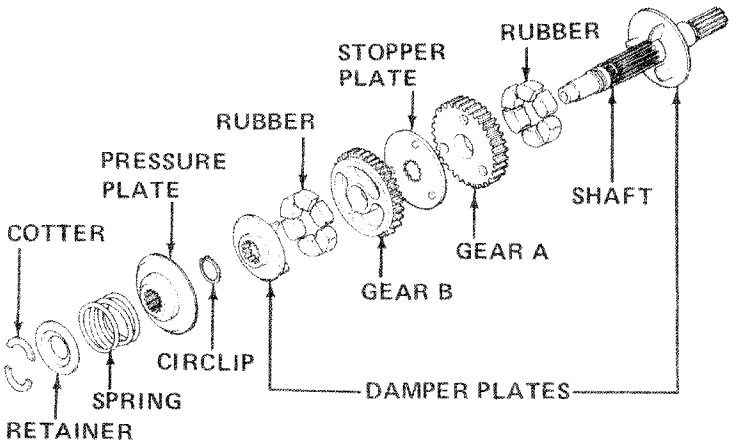

© 1976 American Honda Motor Co., Inc.
Printed in U.S.A. 7-78

BATTERY & CHARGING SYSTEM
GENERATOR DRIVE INSPECTION

Measure the free length of the spring.

With a spring pressure tester, measure the spring tension at the specified compressed length.

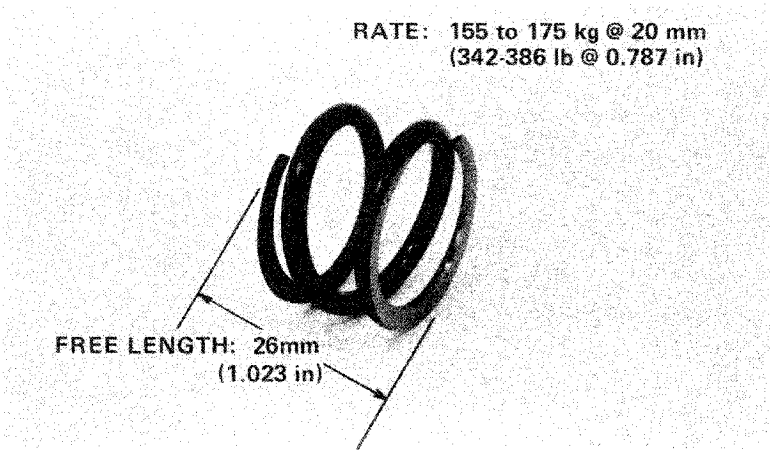

Reassemble the drive assembly gears, damper plates, damper rubbers, bearing, and bearing cover.

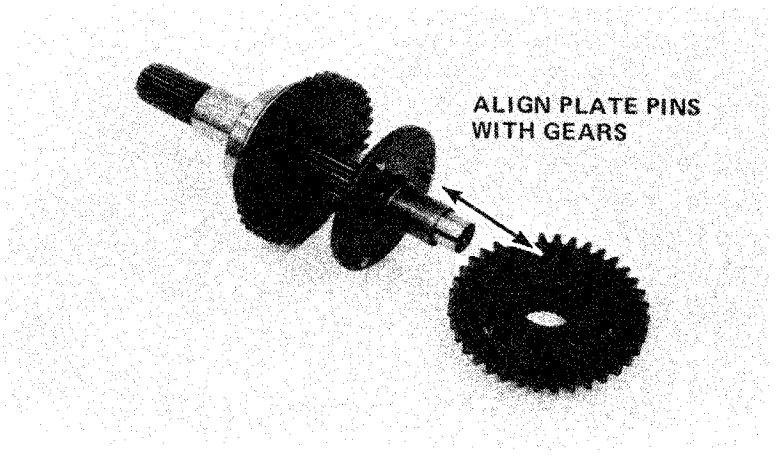

NOTE

The spring compressor can be used without a hydraulic press.

Place the assembly in a press and install the damper spring, damper spring retainer, and cotters. Be certain that the cotters are fully seated in their grooves.

NOTE

Do not compress the spring more than necessary to install the cotters.

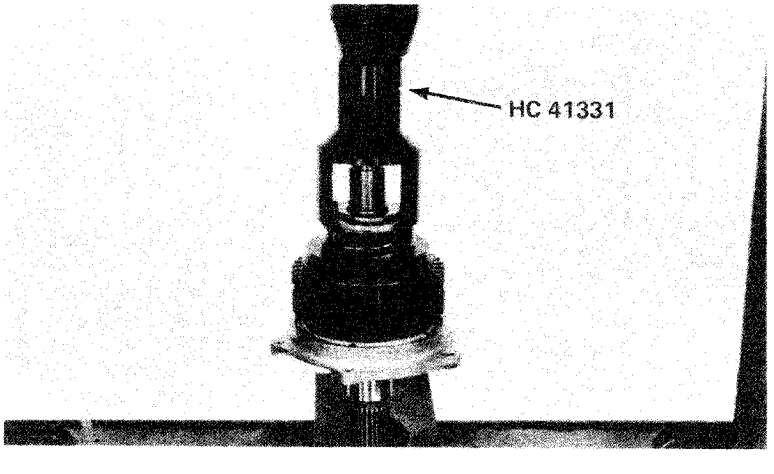

© 1976 American Honda Motor Co., Inc.
Printed in U.S.A. 7-78

Turn the engine so that the rear cover face is up.

Install the AC Generator gears, and install four of the five bearing cover bolts loosely. Omit the sprocket tab bolt.

Adjust the backlash to zero by hooking a spring scale to the ACG shaft and pulling with a 1.0 ± 0.5 kg force while torquing the four 6 mm bearing cover bolts.

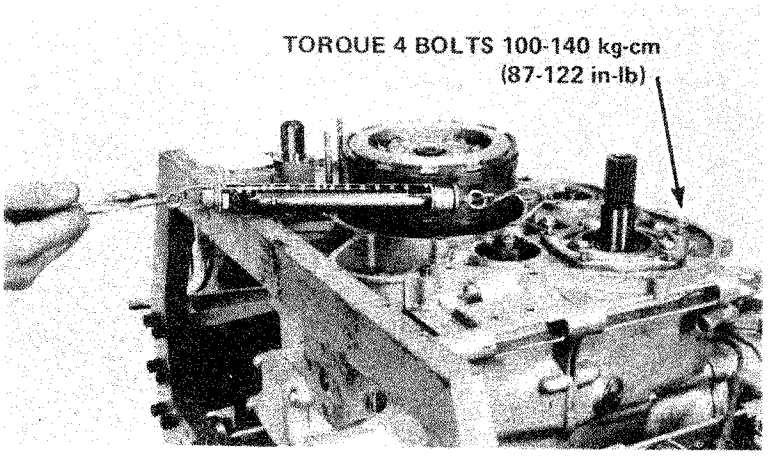

Install the driven gear into the starter clutch. Install the rotor, sprocket and chain as an assembly, to within 20 mm of the engine block.

Install the chain holder tab and tighten the holder bolt securely.

Fully engage the ACG rotor on the shaft and torque the rotor nut.

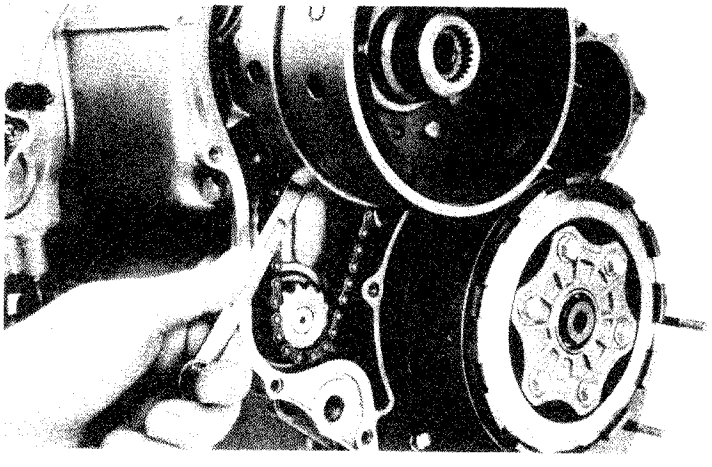

Install the stator coils in the rear engine cover.

Install the rear engine cover and the clutch cover.

NOTE
Reinstall the engine according to Section 4.

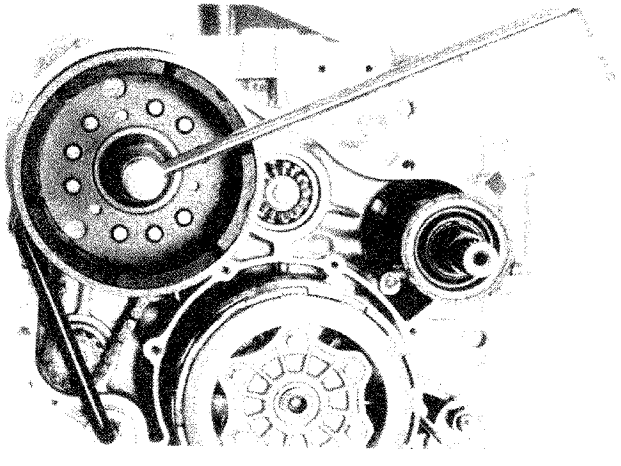

© 1976 American Honda Motor Co., Inc.
Printed in U.S.A. 7-78